A GUIDE FOR YOUR RIDE.

ITM. / ART. 2035712

IMPORTANT:
Read carefully and retain for future reference.

JETSON

TOUK
2-Seat Bike Trailer

MODEL SKU(S): JTOUK-GRY

OUR TOP TWO RIDING RULES:

BE SAFE.
HAVE FUN!

MANUFACTURED IN JIAXING, CHINA
IMPORTED BY TRURIDE TECH LLC.
PO BOX 461, JERSEY CITY, NJ 07302-9998

DATE CODE: 04/2026
DOCUMENT EDITION: V1.0
MADE IN CHINA

© 2026, TRURIDE TECH. ALL RIGHTS RESERVED. MANUFACTURED FOR TRURIDE TECH LLC.
JETSON® IS A REGISTERED TRADEMARK USED UNDER LICENSE FROM JETSTREAM BRANDS LLC.
NO PORTION OF THIS DOCUMENT, INCLUDING SHAPE, GRAPHICS, AND DESIGN, MAY BE
REPRODUCED OR TRANSMITTED IN ANY FORM OR BY ANY MEANS.

Contents

Safety Warnings . . . 3
Warranty Coverage & Product Registration . . . 5
1. About Your Product
1.1 What's in the Box . . . 6
1.2 Product Specs . . . 7
1.3 Online Resources . . . 7
1.4 Product Overview . . . 8
2. Getting Started
2.1 Starting Notes . . . 12
2.2 Preparing for Assembly & Setup . . . 13
2.3 Assembling the Frame . . . 14
2.4 Unfolding & Securing the Tow Bar . . . 19
2.5 Attaching the Wheels . . . 22
2.6 Attaching the Canopy . . . 24
2.7 Assembling & Attaching the Safety Flag . . . 26
2.8 Checking & Inflating the Tires . . . 28
2.9 Tow Bike Compatibility . . . 29
2.10 Tow Bike Setup & Trailer Attachment . . . 29
A. Detaching a Coupler from the Tow Bar . . . 29
B. Attaching a Coupler to the Tow Bike Axle . . . 30
· Bikes with Quick-Release Skewers . . . 30
· Bikes with Nutted Rear Axles . . . 31
C. Connecting the Tow Bar to the Installed Coupler & Installing the Safety Strap . . . 32
D. Releasing the Trailer from the Tow Bike . . . 33
3. Features & Functions
3.1 Using the 5-Point Safety Harnesses . . . 34
A. Positioning the Child Passenger(s) . . . 35
B. Securing the 5-Point Safety Harness Over Each Child Passenger . . . 35
C. Releasing the 5-Point Safety Harnesses . . . 36
3.2 Opening the Weather Shield . . . 37
3.3 Collapsing the Trailer for Storage & Transport . . . 38
4. Operating Instructions
4.1 Pre-Ride Safety Checks . . . 39
4.2 Helmet Safety . . . 40
4.3 Riding Rules & Guidelines . . . 40
Care & Maintenance . . . 41
Connect with Us . . . 42

⚠ WARNING:

FAILURE TO COMPLY WITH INSTRUCTIONS AND WARNINGS IN THIS MANUAL COULD RESULT IN SERIOUS INJURY OR DEATH.

ASSEMBLY & SETUP WARNINGS

- Do not use this product if there are missing or damaged parts.
- Only use replacement parts supplied or recommended by the manufacturer.
- Accessories not approved by the manufacturer should not be used.
- Do not overinflate the tires. Failure to comply with the rated sidewall pressure may lead to explosion of the tire and possible injury.
- Do not make modifications to the product.
- Use caution to avoid pinch points when assembling, folding, or unfolding the trailer.

CHILD PASSENGER WARNINGS

- This product is not suitable for children under 12 months of age.
- Do not use with passengers who exceed the weight limitations of the trailer, as this can increase the risk of tipping the trailer.
- Children must be able to sit upright without support and have adequate neck strength to support their heads before riding in the trailer.
- Always use the 5-point safety harness restraints to avoid serious injury from slipping or falling out of the trailer.
- Do not install a car seat or any other seating device in the trailer.
- Never leave a child unattended in the trailer.
- Do not let your child play with this product.
- Child passengers must wear a bicycle helmet that meets applicable safety standards.
- When using the double-seat trailer with one child, the child should be seated on the right side (in the direction of travel).
- Ensure that children cannot put fingers, clothing, or toys into the wheel spokes or any other moving parts.
- Check the comfort and safety of child passengers frequently, especially during hot or cold weather. Take precautions with clothing, ventilation, and hydration to protect the child passengers from exposure hazards such as wind chill and overheating.
- Never have more than 2 children in the trailer at any time.

SAFETY WARNINGS.

KEEP THESE INSTRUCTIONS.

USE WARNINGS

- Ensure that all locking pins are engaged and secure before use. Tighten any loose fasteners.
- This product is intended for use with a 2-wheel bike and is not intended for tow by any other recreational product, or while running, walking, or skating.
- Before each ride, make sure that the trailer does not interfere with braking, pedaling, or steering of the tow bike.
- Always ride with the canopy down to protect children from flying debris.
- Trailer weight must be properly distributed for safe handling. The weight on the hitch connector should be between 30N (approx. 6.6 lb | 3 kg) and 80N (approx. 17.6 lb | 8kg). To measure this, load the trailer and place next to the bathroom scale. Step on the scale and make note of your weight. Standing on the scale, lift up the tow bar 1 foot (approx. 25 cm) off the ground. The weight shown should be 6.6 - 17.6 lb more than your own wight. If the weight is too low, the rear wheel of the bike could lose traction. If it is too high, the hitch may be overloaded.
- Any load attached to the back of the backrest and/or on the sides of the vehicle will affect the stability of the trailer.
- Do not use with a total load that exceeds the weight limit of the trailer, or more children than the trailer has been designed for. If recommended load is exceeded, the unit may become unstable.
- Do not place parcels on the trailer. Parcels placed on the trailer may cause the trailer to become unstable.
- Ensure that a reflector that complies with CPSC regulations is installed and visible on the rear of the trailer. Do not obscure reflector.
- Ensure that the safety flag is in place and visible.
- Do not pull or push the trailer with a vehicle.

TOW BIKE & SAFE RIDING WARNINGS

- It is recommended that a qualified bicycle mechanic does a safety check of the tow bike before attaching the trailer.
- The rider of the bike must be at least 16 years old.
- Always comply with local regulations when using the trailer on public roadways.
- Never ride at night without adequate lighting. Obey all local legal requirements for lighting.
- Do not ride in hazardous weather.
- Avoid braking suddenly.
- Leave an increased braking distance when pulling the trailer.
- Use caution when going downhill.
- If you need to come to a stop for any reason, such as to check on your child, to make adjustments, to address a flat tire, or for arrival at your destination, be sure to pull the tow bike and the trailer off the road completely.
- Avoid rocks, curbs, hard braking and sudden swerving. Avoid running over obstacles with one wheel, as this may cause the trailer to tip over.
- This trailer is not intended for use at high speeds. Do not exceed the recommended speed limits: 10 mph on smooth, straight roads, and 5 mph when turning or on uneven roads.

WARRANTY COVERAGE & PRODUCT REGISTRATION.

GENERAL LIMITED WARRANTY

YOUR NEW JETSON PRODUCT IS WARRANTED AGAINST DEFECTS IN MATERIALS AND WORKMANSHIP AS INDICATED ON RIDEJETSON.COM/WARRANTY FOR A PERIOD OF TIME FROM THE DATE OF ORIGINAL RETAIL PURCHASE WHEN USED IN ACCORDANCE WITH JETSON'S USER MANUALS (REFER TO RIDEJETSON.COM/SUPPORT). **UNDER THIS WARRANTY, YOU WILL BE ABLE TO DIRECT YOUR CLAIMS TO JETSON EVEN IN SITUATIONS WHERE YOU PURCHASED THE JETSON PRODUCT FROM ONE OF OUR AUTHORIZED RETAILERS.** TO READ THE FULL TERMS OF OUR WARRANTY, VISIT RIDEJETSON.COM/WARRANTY.

PRODUCT REGISTRATION

REGISTER YOUR NEW JETSON TO FAST-TRACK YOU TOWARDS PERSONALIZED PRODUCT AND WARRANTY SUPPORT. MAKE YOUR MOVE AT RIDEJETSON.COM/PAGES/REGISTRATION.

1. ABOUT YOUR PRODUCT.

1.1 What's in the Box

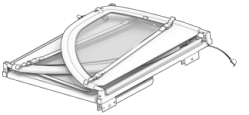

FRAME



WHEEL (×2)



CANOPY



SAFETY FLAG (×3 PIECES)



13MM BIKE
ATTACHMENT COUPLER*

NOTE: IMAGES MAY NOT REFLECT EXACT APPEARANCE OF ACTUAL PRODUCT.

**15MM COUPLER ALSO INCLUDED; PRE-ATTACHED TO TOW BAR*

1.2 Product Specs

- TIRE SIZE: 16 IN | 40.64 CM
- DIMENSIONS, EXTERIOR:
  50.0 IN (L) × 28.93 IN (W) × 32.3 IN (H) | 127.0 CM (L) × 73.5 CM (W) × 82.0 CM (H)
- DIMENSIONS, COLLAPSED:
  26.77 IN (L) × 24.41 IN (W) × 5.71 IN (H) | 68.0 CM (L) ×62.0 CM (W) × 14.5 CM (H)
- PRODUCT WEIGHT: 20.13 LB | 9.13 KG
- MAX NUMBER OF CHILD PASSENGERS: 2
- MAX WEIGHT PER PASSENGER: 50.0 LB | 22.68 KG
- MAX LOAD: 100.0 LB | 45.36 KG WITH 2 PASSENGERS & CARGO
- RECOMMENDED PASSENGER AGE: 1 - 6 YEARS
- MINIMUM AGE FOR RIDER OF TOW BIKE: 16 YEARS
- BIKE ATTACHMENT COUPLER SIZES: 13 MM (1.3 CM) | 0.51 IN & 15 MM (1.5 CM) | 0.59 IN

1.3 Online Resources

Scan for our most updated product onboarding materials and support resources.

Find our collection of user manuals at https://ridejetson.com/pages/product-manuals

1.4 Product Overview

1. MAIN FRAME
2. FRAME CROSSBAR
3. CROSSBAR LOCKING PIN WITH ATTACHMENT STRAP
4. CANOPY
   A. WEATHER SHIELD
   B. WEATHER SHIELD TOGGLE HOLD WITH ELASTIC LOOP (×2; LEFT AND RIGHT)
5. SIDE VIEWING WINDOW (×2; LEFT AND RIGHT)
6. FABRIC FASTENING CLIPS (×4; 2 LEFT AND 2 RIGHT)
7. SAFETY FLAG
   A. FLAGPOLE
   B. FLAGPOLE SUPPORT POCKET
   C. FLAGPOLE BASE POCKET
8. WHEEL (×2; LEFT AND RIGHT)
   A. TIRE VALVE WITH DUST CAP (×2; LEFT AND RIGHT)
   B. AXLE (×2: LEFT AND RIGHT)
   C. WHEEL REFLECTOR (×2; LEFT AND RIGHT)
   D. AXLE LOCKING PIN WITH ATTACHMENT STRAP (×2; LEFT AND RIGHT)
9. RED REAR REFLECTOR
10. SEATING AREA (DETAILS NEXT PAGE)
11. BIKE ATTACHMENT COMPONENTS (DETAILS NEXT PAGE)
12. TOW BAR
    A. TOW BAR LOCKING PIN WITH ATTACHMENT STRAP

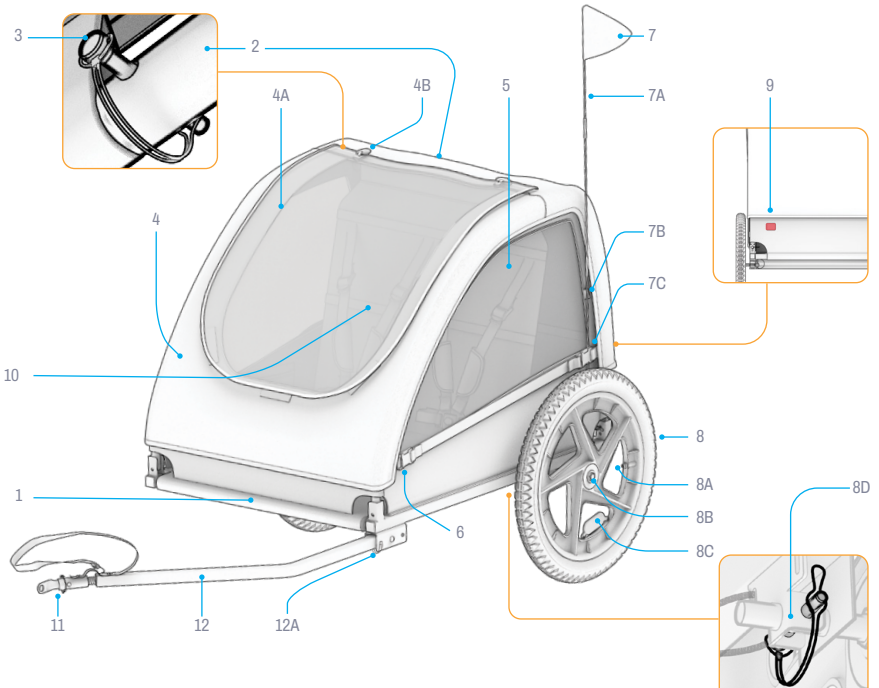
3
2
4A
4B
5
7
7A
9
4
7B
7C
10
8
1
8A
8D
8B
6
8C
11
12
12A

10. SEAT
    A. SEAT BACK
    B. 5-POINT SAFETY HARNESS (×2; LEFT AND RIGHT)
    C. SAFETY HARNESS CLIP RELEASE BUTTON (×2; 1 PER HARNESS)
    D. STORAGE POCKET (×2; LEFT AND RIGHT)
11. BIKE ATTACHMENT COMPONENTS
    A. SAFETY STRAP WITH ATTACHMENT HOOK
    B. 15MM BIKE ATTACHMENT COUPLER*
    C. COUPLER LOCKING PIN WITH ATTACHMENT STRAP
    D. SAFETY STRAP ATTACHMENT LOOP

**13MM COUPLER ALSO INCLUDED SEPARATELY IN THE BOX*

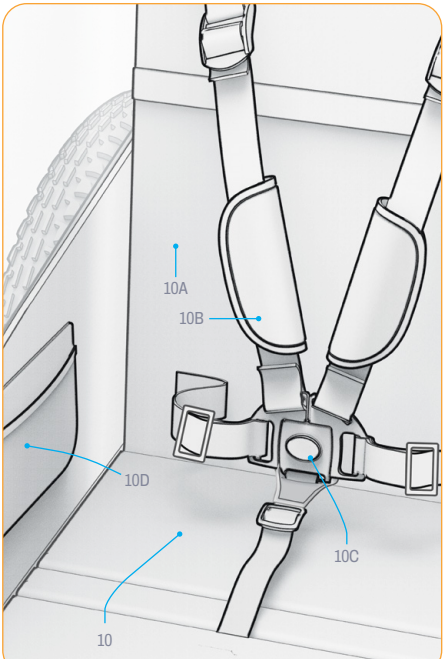
10A
10B
10D
10C
10

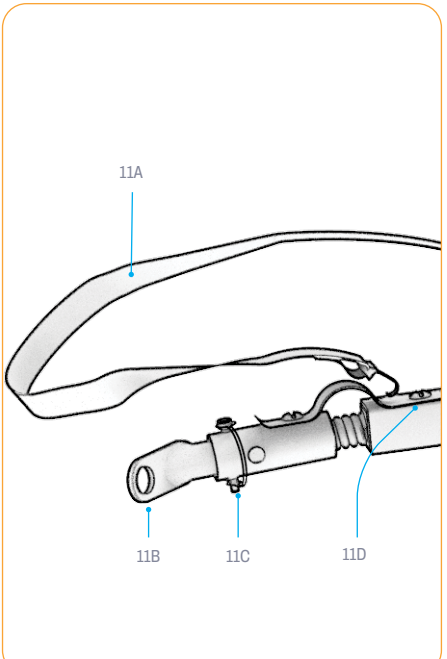
11A
11B
11C
11D

2. GETTING STARTED.

2.1 Starting Notes

- KICK OFF YOUR ADVENTURE RIGHT: PRIOR TO USE OF THIS PRODUCT, CAREFULLY READ THE ENTIRE USER MANUAL, INCLUDING SAFETY WARNINGS. MAKE SURE YOU UNDERSTAND, ACCEPT, AND ADHERE TO ALL:
  - MANUFACTURER'S RECOMMENDATIONS.
  - SAFETY INSTRUCTIONS AND WARNINGS.
  - LOCAL RIDING AND OPERATIONAL LAWS AND ORDINANCES.

- THE DIRECTIONS GIVEN IN THIS MANUAL—RIGHT, LEFT, FRONT/FORWARD, AND REAR/BACK—ARE ORIENTED AS THE PASSENGER WOULD SEE THEM WHEN SEATED IN THE TRAILER. THE "LEFT SIDE" OF THE TRAILER, FOR EXAMPLE, IS THE SIDE WHERE THE TOW BAR IS LOCATED.

2.2 Preparing for Assembly & Setup

CLEAR A LARGE WORK SURFACE AND UNPACK ALL PARTS FROM INSIDE THE COLLAPSED FRAME PIECE. REMOVE AND DISPOSE OF ALL PROTECTIVE PACKING PIECES, INCLUDING PROTECTIVE CAPS ON THE WHEEL AXLES.

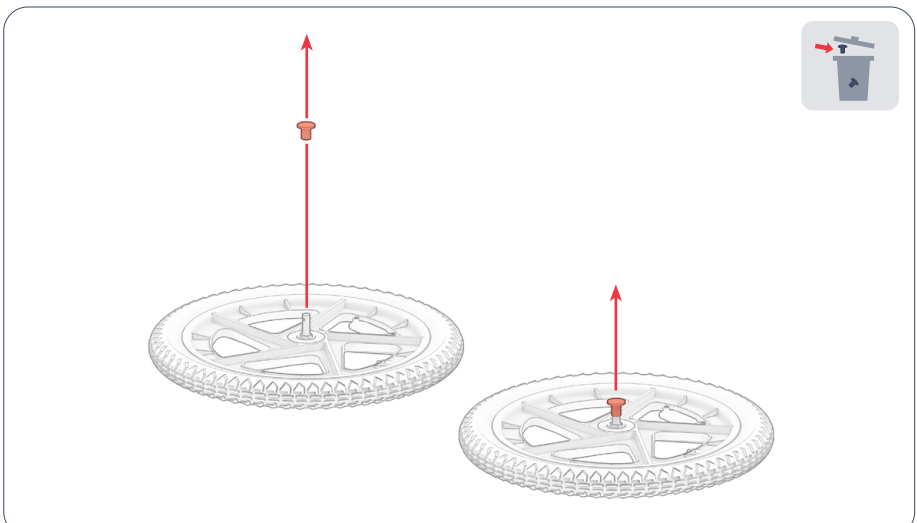



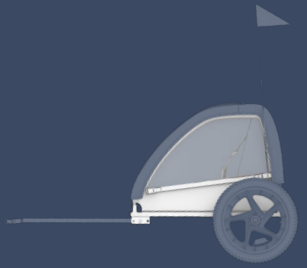

2.3 Assembling the Frame

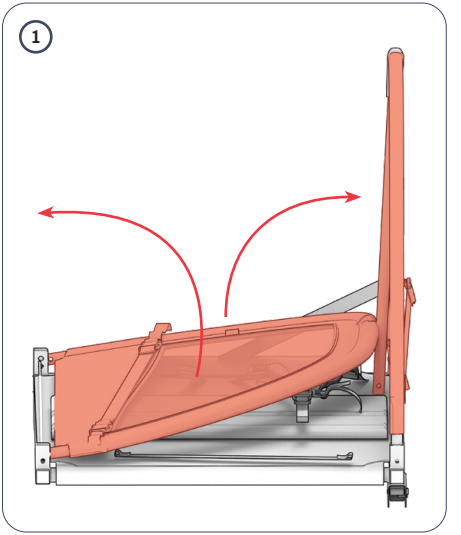

2

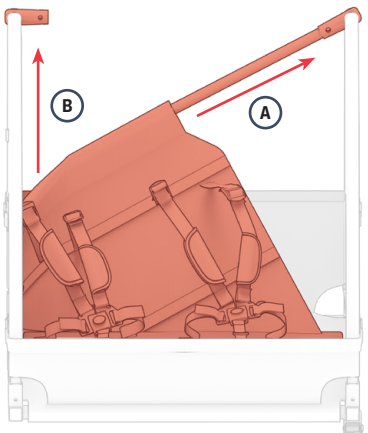

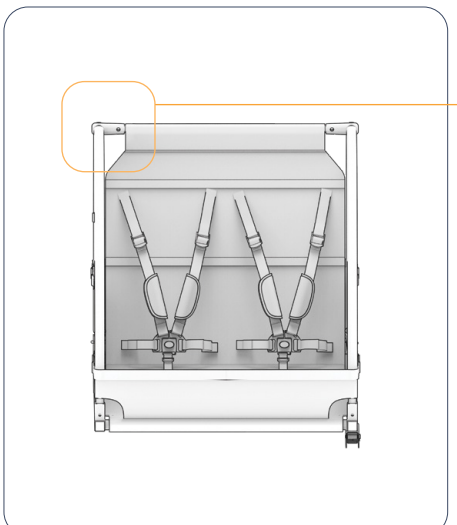


3

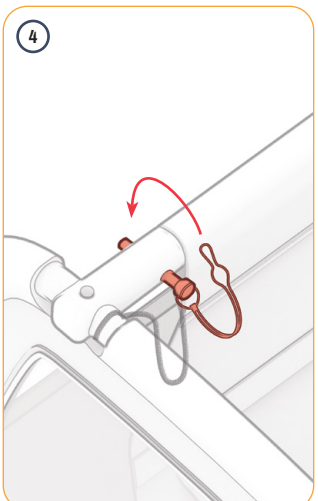

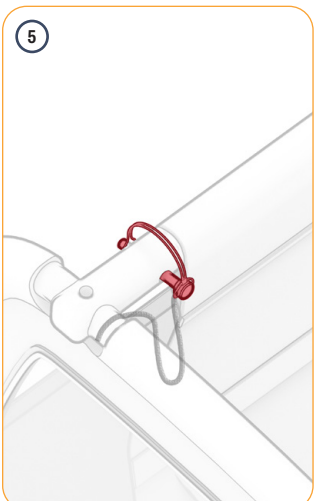

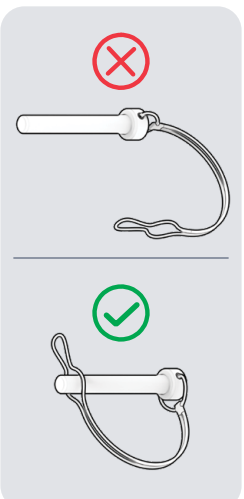

⚠ **WARNING:** Ensure that the locking pin is engaged and secure before use.

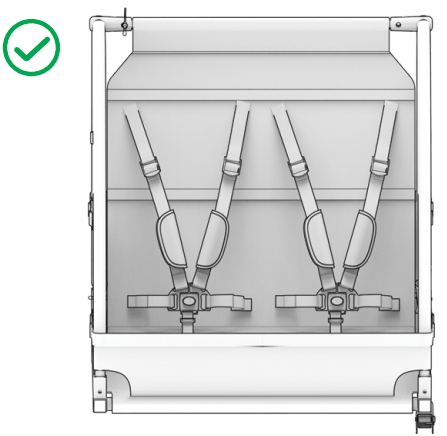

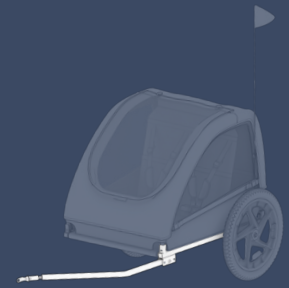

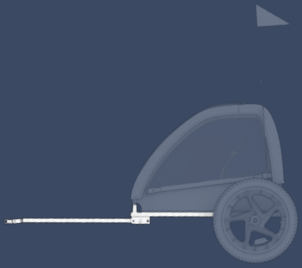

2.4 Unfolding & Securing the Tow Bar

Unfolding from Storage

1

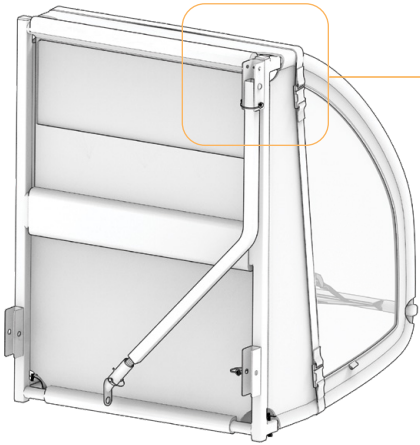


2

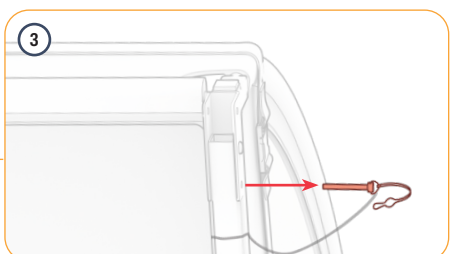
3


4

Securing for Riding

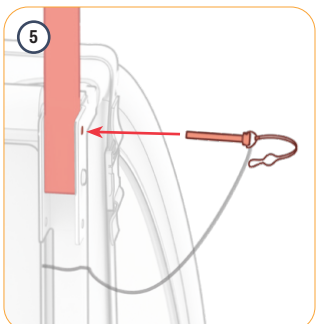

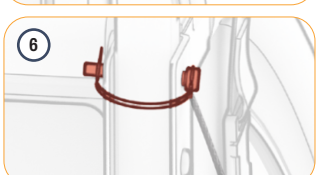

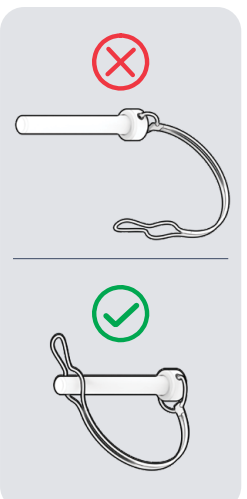

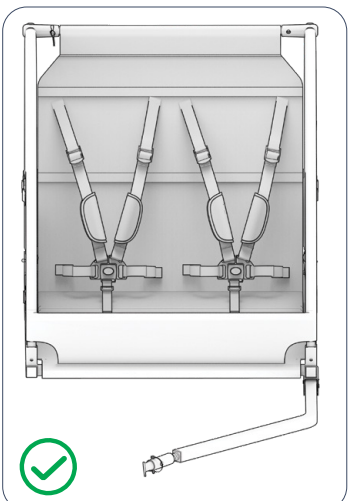

⚠ **WARNING:** Ensure that the locking pin is engaged and secure before use.



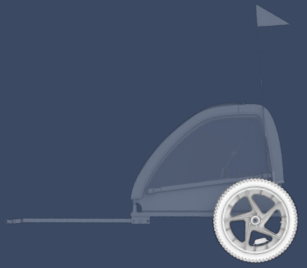

2.5 Attaching the Wheels

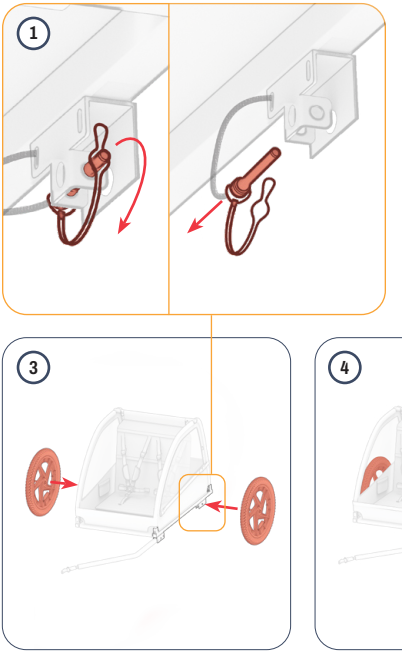

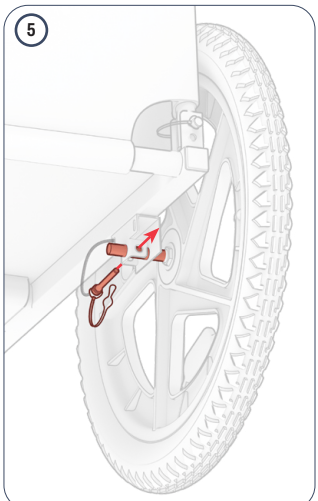

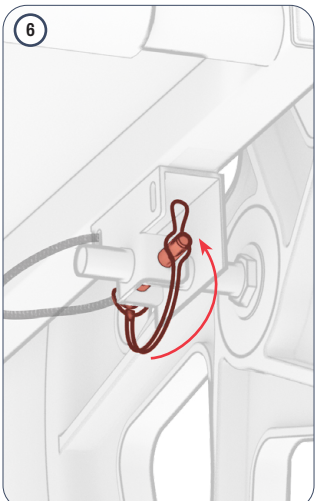

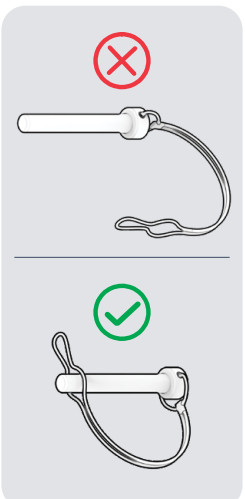

7 REPEAT STEPS 5 AND 6 ON THE LEFT WHEEL AXLE WITH THE LEFT SIDE LOCKING PIN.

⚠ **WARNING:** Ensure that the locking pins are engaged and secure before use.

2.6 Attaching the Canopy



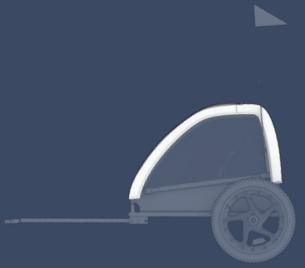

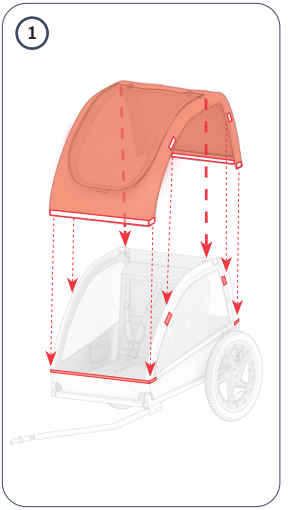

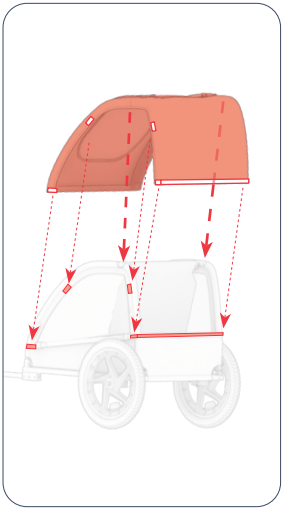

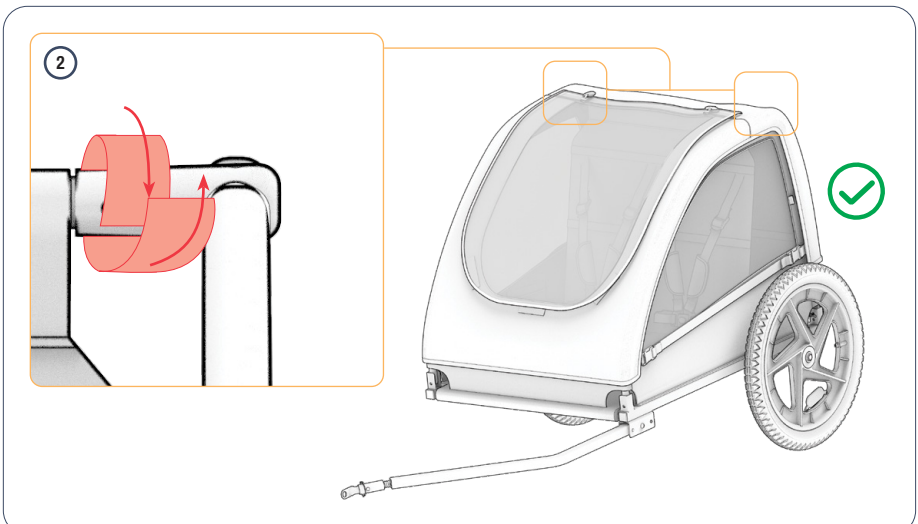
2



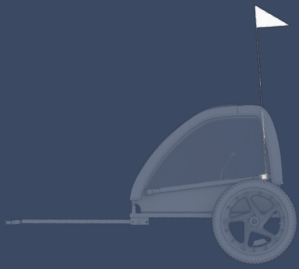

2.7 Assembling & Attaching the Safety Flag

Assembling

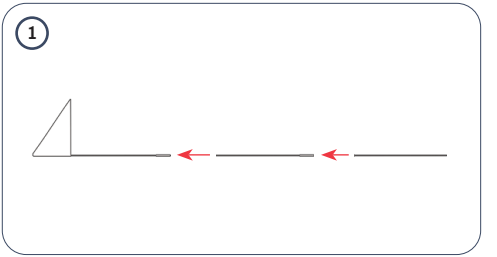



Attaching

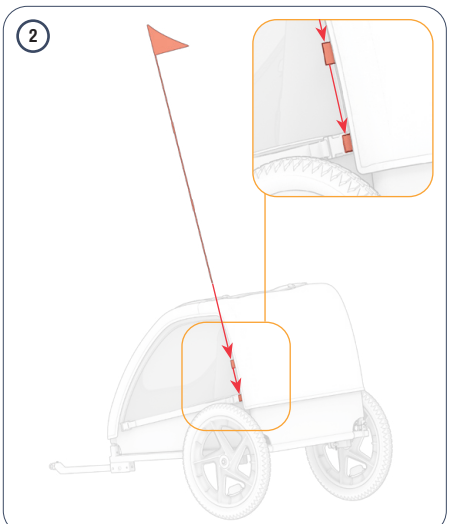

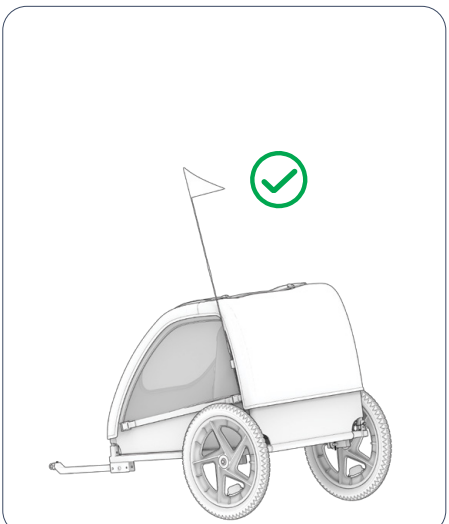

⚠ **WARNING:** Ensure that the safety flag is in place and visible before use.

2.8 Checking & Inflating the Tires

BEFORE FIRST USE, YOU WILL NEED TO ADD AIR TO THE TIRES TO BRING THEM TO THE RECOMMENDED PRESSURE OF **36 PSI** (POUNDS PER SQUARE INCH). USE A GAUGE TO CHECK THAT THE TIRE PRESSURE IS AT 36 PSI PRIOR TO EVERY RIDE.

To Add Air

1. REMOVE THE DUST CAP FROM THE TIRE VALVE ON ONE WHEEL BY TWISTING IT COUNTERCLOCKWISE. SET ASIDE.
2. FOLLOW THE MANUFACTURER'S INSTRUCTIONS ON YOUR AIR PUMP TO INSERT AIR INTO THE TIRE. CHECK PERIODICALLY WITH A GAUGE AND CONTINUE ADDING AIR UNTIL THE PRESSURE REACHES 36 PSI.
3. REMOVE THE AIR PUMP AND REPLACE THE DUST VALVE BY TWISTING IT ON CLOCKWISE.
4. REPEAT WITH THE OTHER TIRE.

⚠ **CAUTION:** Only use a manual air pump to inflate the tires on the trailer. Never use an air compressor; doing so may cause the tire tubes to pop.

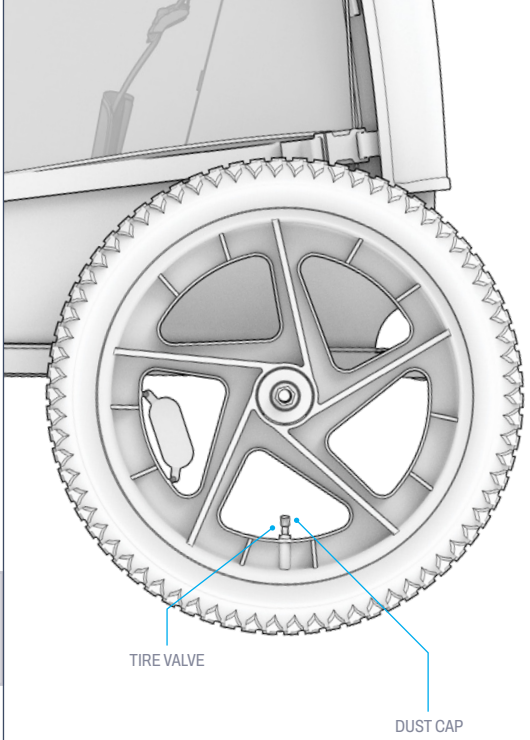

2.9 Tow Bike Compatibility

THIS TRAILER IS COMPATIBLE WITH MOST BIKES WITH WHEELS FROM 14 TO 29 INCHES THAT UTILIZE EITHER A QUICK-RELEASE SKEWER OR AN AXLE NUT ON THE REAR WHEEL AXLE. IT IS NOT COMPATIBLE WITH BIKES THAT UTILIZE A THRU AXLE.

FOR REPEATED USE OF THE SAME BIKE WITH THIS TRAILER, THE COUPLER CAN REMAIN ON THE REAR AXLE OF THE BIKE, EVEN WHEN THE BIKE IS NOT PULLING THE TRAILER.

IMPORTANT: 2 couplers are included for tow bike attachment.

- 15 mm (pre-attached to the trailer tow bar)
- 13 mm (additional coupler included in the box)

Use the coupler that fits securely around your tow bike's axle.

2.10 Tow Bike Setup & Trailer Attachment

A. Detaching a Coupler from the Tow Bar

IMPORTANT: Prior to attaching the trailer to the bike's rear axle, remove the coupler from the tow bar.

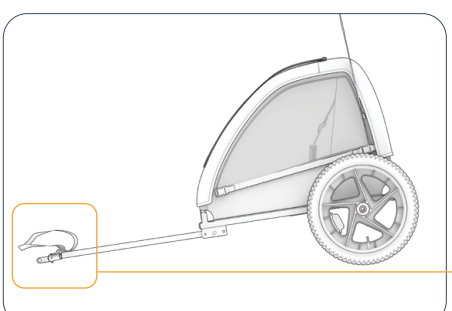

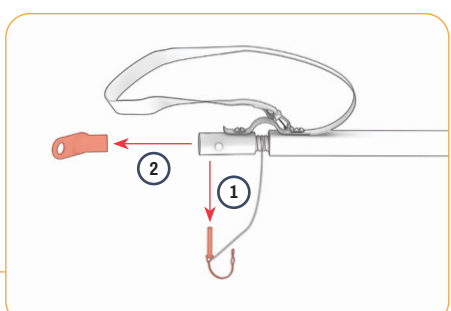

B. Attaching a Coupler to the Tow Bike Axle

Bikes with Quick-Release Skewers

1. REMOVE THE QUICK-RELEASE SKEWER FROM YOUR BIKE'S REAR WHEEL.
2. DETERMINE WHETHER THE 13MM OR 15MM COUPLER IS COMPATIBLE WITH YOUR BIKE. POSITION THE COUPLER AS SHOWN. REINSTALL THE SKEWER THROUGH THE COUPLER AND WHEEL COMPONENTS, ENSURING THAT ALL PARTS OF THE SKEWER ARE PROPERLY POSITIONED ON BOTH SIDES OF THE REAR WHEEL.
3. CLOSE THE LATCH ON THE SKEWER, TIGHTEN THE KNOB, AND ENSURE THAT ALL PARTS ARE SECURE.

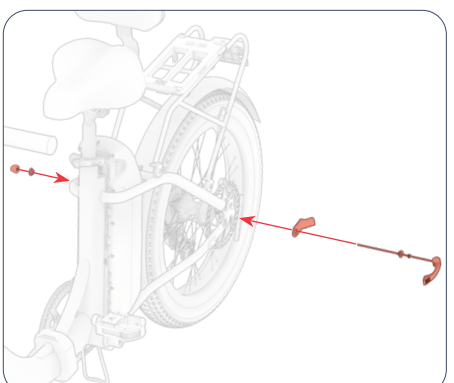

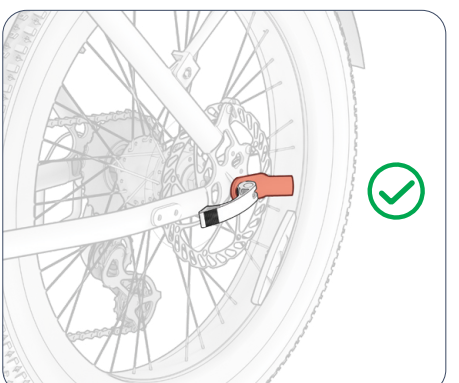

⚠ **WARNING:** The tension-adjusting nut must engage the threads for at least 5 full turns in order to ensure adequate clamping force for holding the rear wheel securely. Failure to tighten the tension-adjusting nut fully may result in accidents with serious injury or death. If the quick-release skewer is too short, it must be replaced. Consult a professional bicycle mechanic for the appropriate parts and assistance.

Bikes with Nutted Rear Axles

1. USE A WRENCH TO REMOVE THE AXLE NUT ON THE LEFT SIDE OF YOUR BIKE'S REAR WHEEL.
2. DETERMINE WHETHER THE 13MM OR 15MM COUPLER IS COMPATIBLE WITH YOUR BIKE. POSITION THE COUPLER ON THE REAR AXLE AS SHOWN AND TWIST THE AXLE NUT BACK ON.
3. USE THE WRENCH TO TIGHTEN THE NUT, AND ENSURE THAT ALL PARTS ARE SECURE.

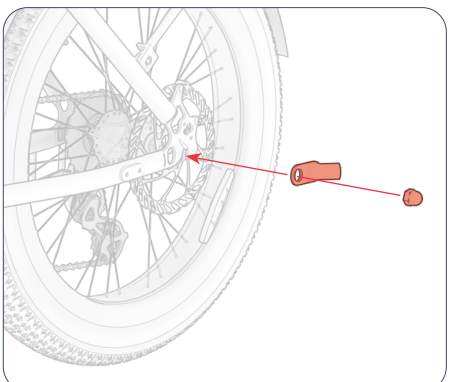

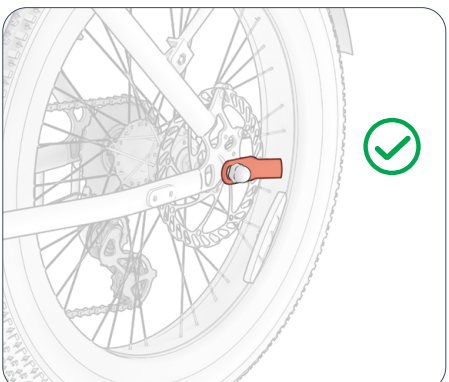

⚠ **WARNING:** The axle nut must engage the threads for at least 5 full turns in order to ensure adequate clamping force for holding the rear wheel securely. Failure to tighten the tension-adjusting nut fully may result in accidents with serious injury or death. If the axle is too short, coupler cannot be used. Consult a professional bicycle mechanic for the appropriate parts and assistance.

C. Connecting the Tow Bar to the Installed Coupler & Installing the Safety Strap

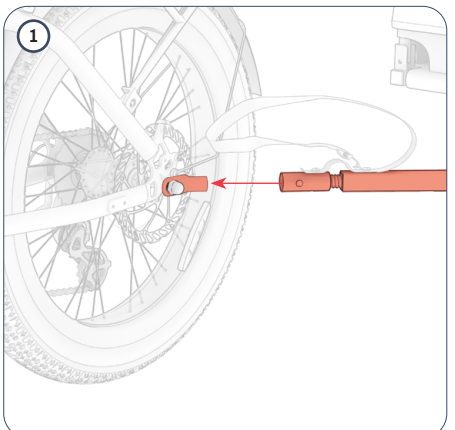

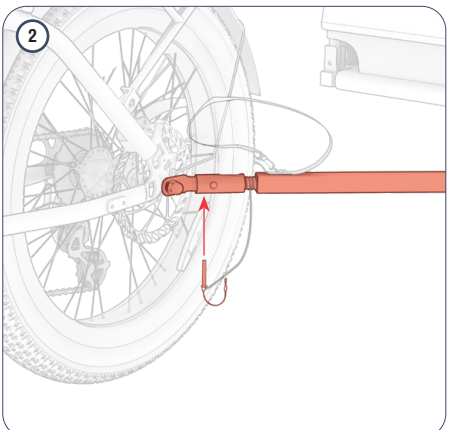

⚠ **WARNING:** Ensure that the coupler is securely attached to the bike axle and the tow bar safety strap is secured around the bike frame. Failure to do so could lead to an accident resulting in serious injury or death.

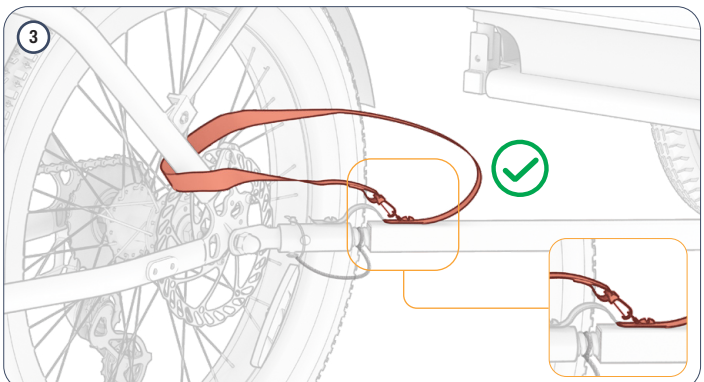

⚠ **WARNING:** Always attach the tow bar safety strap to the bike frame when pulling the trailer. Using the trailer without the safety strap attached to the bike may result in injury or death.

D. Releasing the Trailer from the Tow Bike

1. RELEASE THE SAFETY STRAP FROM THE SAFETY STRAP ATTACHMENT LOOP ON THE TOW BAR, AND REMOVE THE STRAP FROM AROUND THE TOW BIKE FRAME.
2. RELEASE THE COUPLER LOCKING PIN AND SLIDE IT OUT OF THE TOW BAR.
3. PULL THE TOW BAR OFF OF THE COUPLER.

NOTE: FOR REPEATED USE OF THE TRAILER WITH THE SAME TOW BIKE, THE COUPLER CAN REMAIN ON THE TOW BIKE AXLE.

3. FEATURES & FUNCTIONS.

3.1 Using the 5-Point Safety Harnesses

MAXIMUM NUMBER OF CHILD PASSENGERS: 2
RECOMMENDED PASSENGER AGE: 1 - 6 YEARS
MAXIMUM WEIGHT PER PASSENGER: 50 LB | 22.68 KG
MAXIMUM LOAD: 100 LB | 45.36 KG WITH 2 CHILD PASSENGERS AND CARGO

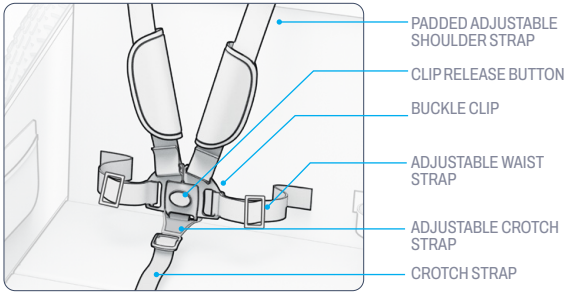

⚠ WARNING:

- Avoid serious injury from falling or sliding out. Always properly secure child passengers with a safety harness.
- This product is not suitable for children under 12 months.
- Never leave a child unattended in the trailer.
- Never have more than 2 children in the trailer at any time.
- Children must be able to sit upright and have adequate neck strength to support their heads before riding in the trailer.

A. Positioning the Child Passenger(s)

PROPER USE OF 5-POINT SAFETY HARNESSES FOR 2 CHILD PASSENGERS:



PROPER SEATING LOCATION & USE OF 5-POINT SAFETY HARNESS FOR 1 CHILD PASSENGER:

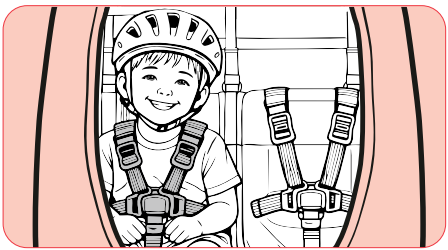

IMPORTANT: WHEN USING THE DOUBLE-SEAT TRAILER WITH 1 CHILD, ALWAYS SEAT THE CHILD IN THE RIGHT-HAND SEAT.

B. Securing the 5-Point Safety Harness Over Each Child Passenger

1. POSITION THE CHILD IN THE SEAT.
2. PULL THE CROTCH STRAP BETWEEN THE CHILD'S LEGS AND POSITION THE BUCKLE AT THE LAP.
3. POSITION THE CHILD'S ARMS BETWEEN THE SHOULDER AND WAIST STRAPS ON EACH SIDE OF THE HARNESS. INSERT THE BUCKLE CLIPS AT THE END OF EACH SET OF STRAPS INTO THE INSERTION POINTS AT THE TOP OF THE BUCKLE. ENSURE THAT THE CLIPS HAVE CLICKED INTO PLACE AND ARE SECURE IN THE BUCKLE.
4. USE THE ADJUSTMENT SLIDE BUCKLES ON THE STRAPS TO SECURE THE CHILD SNUGLY IN THE HARNESS. ENSURE THAT THE WAIST STRAPS AND BUCKLE ARE PROPERLY POSITIONED AT THE CHILD'S WAIST, AND THE SHOULDER STRAPS ARE SNUG AROUND THE CHILD'S SHOULDERS AND CHEST.
5. CHECK THAT THE HARNESS IS SECURE AND SNUG AROUND THE CHILD.

C. Releasing the 5-Point Safety Harnesses

1. PRESS THE RELEASE BUTTON ON THE BUCKLE.
2. REMOVE THE LEFT AND RIGHT INSERTION CLIPS FROM THE BUCKLE.
3. LOWER THE CROTCH STRAP, REMOVE THE SHOULDER AND WAIST STRAPS FROM AROUND THE CHILD, AND LIFT THE CHILD OUT OF THE SEAT.

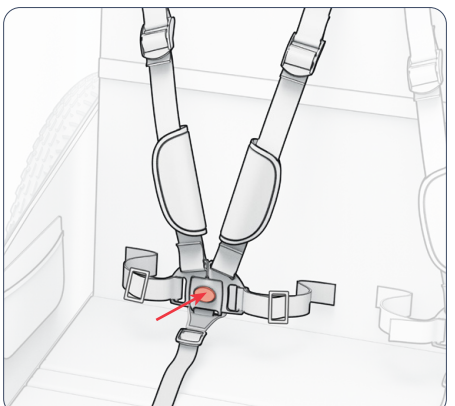

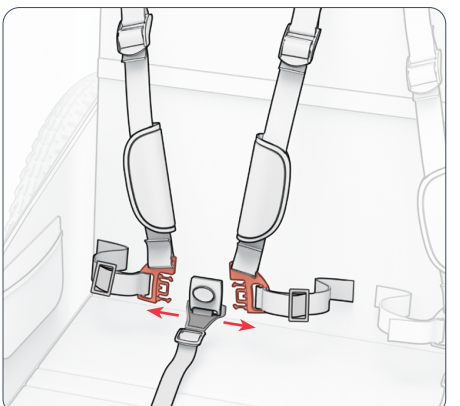

3.2 Opening the Weather Shield

THE WEATHER SHIELD SHOULD BE CLOSED WHENEVER THE TRAILER IS IN MOTION. OPEN THE WEATHER SHIELD TO POSITION OR REMOVE THE CHILD PASSENGERS, OR FOR VENTILATION WHEN MOVEMENT HAS STOPPED.

⚠ **WARNING:** Always ride with the canopy attached and the weather shield down to protect children from flying debris.

1. UNFASTEN THE HOOK AND LOOP ATTACHMENT STRAPS ON THE UNDERSIDE OF THE FRONT WINDOW FROM THE HOOK AND LOOP ATTACHMENT STRAPS ON THE CANOPY.
2. ROLL THE WINDOW FLAP UP.
3. WRAP THE TOGGLE HOLD STRAPS (UNDERSIDE) AROUND THE TOGGLE HOLDS TO SECURE THE ROLLED-UP FLAP.

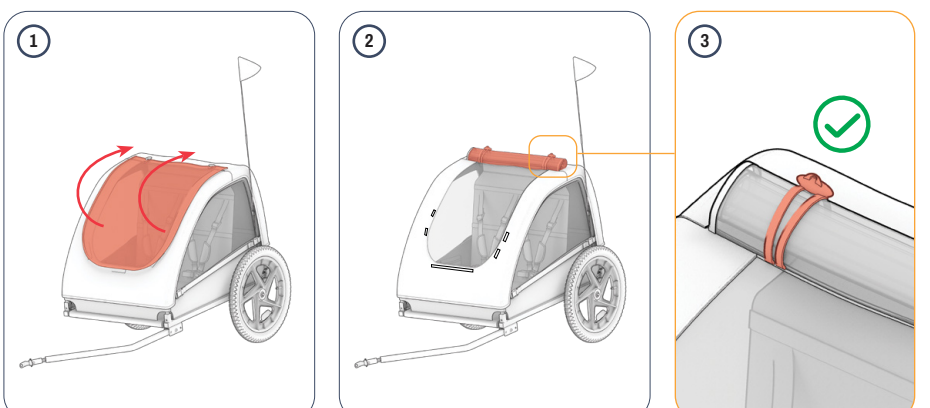

3.3 Collapsing the Trailer for Storage & Transport

REMOVE OR COLLAPSE AS NECESSARY TO FIT IN YOUR SPACE!

Tucking the Tow Bar Under the Frame

- IF THE TRAILER IS ATTACHED TO YOUR BIKE, RELEASE THE TOW BAR FROM THE COUPLER. **(REVERSE INSTRUCTIONS IN SECTION 2.10C)**
- SECURE THE TOW BAR ON THE UNDERSIDE OF THE OF THE MAIN FRAME. RELEASE THE TOW BAR LOCKING PIN, PIVOT THE TOW BAR UNDER THE FRAME, AND PLACE THE TOW BAR LOCKING PIN THROUGH THE ALIGNED PIN HOLES OF THE FRAME AND TOW BAR. SECURE THE TOW BAR BY ENGAGING THE LOCKING PIN. **(REVERSE INSTRUCTIONS IN SECTION 2.4)**

Removing the Wheels

- RELEASE THE AXLE LOCKING PIN ON EACH WHEEL AND PULL THE WHEEL AXLES OUT OF THE FRAME. **(REVERSE INSTRUCTIONS IN SECTION 2.5)**

Collapsing the Frame

- REMOVE THE SAFETY FLAG AND SEPARATE INTO 3 PARTS **(REVERSE OF INSTRUCTIONS IN SECTION 2.7)**
- REMOVE THE CANOPY. **(REVERSE OF INSTRUCTIONS IN SECTION 2.6)**
- RELEASE THE CROSSBAR LOCKING PIN, PIVOT THE CROSSBAR DOWN, AND SLIDE THE SEAT BACK OFF THE CROSS BAR. COLLAPSE THE LEFT SIDE AND THEN THE RIGHT SIDE OF THE FRAME INTO THE CENTER. **(REVERSE INSTRUCTIONS IN SECTION 2.3)**

4.1 Pre-Ride Safety Checks

CONDUCT THESE IMPORTANT SAFETY CHECKS BEFORE EVERY JOURNEY.

Wheels

- ENSURE THAT THE WHEELS ARE PROPERLY SECURED TO THE TRAILER WITH THE LOCKING PINS.
- ENSURE THAT THE WHEELS SPIN FREELY WITHOUT OBSTRUCTION.
- ENSURE THAT THE TIRES ARE INFLATED TO THE RECOMMEND PRESSURE OF 36 PSI.
- CHECK THE TIRES AND WHEELS FOR WEAR, CRACKS, OR DAMAGE.

Frame & Tow Bar

- ENSURE THAT THE TOW BAR IS PROPERLY SECURED TO THE TRAILER FRAME.
- ENSURE THAT THE COUPLER AND TOW BAR LOCKING PINS ARE SECURE.
- ENSURE THAT THE LOAD DOES NOT EXCEED 100 LB.
- ENSURE THAT THE WEIGHT OF THE TOW BAR AT THE COUPLER IS GREATER THAN 6.6 LB BUT DOES NOT EXCEED 17.6 LB WITH THE TRAILER FULLY LOADED.
- ENSURE THAT THE SAFETY FLAG IS IN PLACE AND THE REAR REFLECTOR IS INSTALLED AND VISIBLE.
- ENSURE THAT THE CANOPY IS INSTALLED AND THE WINDOWS ARE CLOSED.
- CHECK TO SEE THAT THERE ARE NO RIPS OR ABRASIONS.

Bike & Bike Attachment

- ENSURE THAT THE SAFETY STRAP ON THE TOW BAR IS PROPERLY INSTALLED AROUND THE BIKE FRAME.
- ENSURE THAT THE COUPLER IS PROPERLY SECURED TO THE BIKE'S REAR AXLE.
- CHECK THAT THE TOW BIKE IS IN WORKING ORDER, ESPECIALLY THE BRAKES AND TIRES. REFER TO YOUR BIKE'S USER MANUAL.

Safety Gear

- ENSURE THAT THE CHILDREN IN THE TRAILER AND RIDER OF THE TOW BIKE ARE WEARING APPROPRIATE SAFETY HELMETS.
- ENSURE THAT CHILDREN ARE PROPERLY SECURED WITH THE 5-POINT SAFETY HARNESSES.

4. OPERATING INSTRUCTIONS.

4.2 Helmet Safety

A HELMET SHOULD BE WORN BY THE RIDER AT ALL TIMES.



IMPROPER POSITIONING:
THE FOREHEAD IS EXPOSED.
A FALL COULD RESULT IN
SERIOUS INJURY.



PROPER POSITIONING:
THE FOREHEAD IS
COVERED
BY THE HELMET.

**WEAR A HELMET, APPROPRIATE CLOTHING, SHOES, AND SAFETY GEAR. AVOID CLOTHING THAT CAN GET CAUGHT INTO OR UNDER THE WHEELS. CLOSED-TOE, FLAT SHOES ARE RECOMMENDED. WEAR AN ASTM F1492 APPROVED HELMET AND PROTECTIVE GEAR TO PREVENT INJURY IN THE EVENT OF AN ACCIDENT.*

4.3 Riding Rules & Guidelines

TAKE EXTRA CAUTION WHEN TOWING A BIKE TRAILER. COMPLY WITH ALL LOCAL RULES AND REGULATIONS WHEN USING A TRAILER ON PUBLIC ROADWAYS. RIDERS OF THE TOW BIKE MUST BE AT LEAST 16 YEARS OF AGE.

⚠ **WARNING:**

- DO NOT RIDE WITH A TRAILER IN HAZARDOUS WEATHER.
- DO NOT EXCEED THE RECOMMENDED SPEED LIMITS FOR THIS TRAILER: 10MPH ON SMOOTH STRAIGHT ROADS, AND 5 MPH WHILE TURNING OR ON UNEVEN SURFACES.
- USE EXTRA CAUTION WHEN GOING DOWNHILL
- AVOID ROCKS, CURBS, BUMPS, AND OTHER OBSTACLES.
- AVOID SUDDEN SWERVING.
- AVOID UNEVEN SURFACES AND ROLLING OVER OBSTACLES WITH ONE WHEEL OF THE TRAILER. DOING SO MAY CAUSE THE TRAILER TO TIP.
- LEAVE A WIDE TURNING RADIUS. AVOID SHARP TURNS, WHICH MAY CAUSE THE TRAILER TO TIP.
- AVOID HARD OR SUDDEN BRAKING. LEAVE AN INCREASED BRAKING DISTANCE WHEN PULLING THE TRAILER.
- WHEN STOPPING, ALWAYS PULL THE TRAILER OFF THE ROAD COMPLETELY.

CARE & MAINTENANCE.

Take good care of your Jetson to keep it riding smoothly and safely. Here's how:

Cleaning your Jetson

- CAREFULLY WIPE FRAME AND WEATHER SHIELD WITH A DAMP CLOTH AND THEN WITH A DRY CLOTH.
- HAND WASH FABRIC ELEMENTS WITH WARM WATER AND MILD SOAP.
- LET AIR DRY OUT OF DIRECT SUNLIGHT IN A DRY, WELL-VENTILATED AREA.
- DO NOT USE BLEACH OR SOLVENTS.

Storing your Jetson

- STORE THE PRODUCT INDOORS AND IN A DRY PLACE. THE TRAILER SHOULD NOT BE STORED AT TEMPERATURES LESS THAN 10°F | -23°C OR GREATER THAN 150°F | 65°C.
- COVER THE PRODUCT TO PROTECT IT AGAINST DUST.

Precautions

- KEEP AWAY FROM FIRE AND EXCESSIVE HEAT.
- AVOID INTENSE PHYSICAL IMPACT AND/OR SEVERE VIBRATION.
- USE THE PRODUCT ONLY ON SMOOTH, FLAT SURFACES.
- PROTECT FROM WATER OR MOISTURE.
- CONTACT THE JETSON CARE TEAM IF THERE ARE ANY ISSUES WITH THE PRODUCT.

CONNECT WITH US.

RIDEJETSON.COM/SUPPORT
RIDEJETSON.COM/CHAT

1-844-585-7462

Be sure to follow @ridejetson on social media to learn about fantastic offers, giveaways, and all the latest Jetson news.

LOVING YOUR RIDE?

Leave a review at
ridejetson.com/reviews.
We can't wait to hear from you!
#MakeMoves




JETSON