RACKIT

*Compatible with all RackIt Smart Cargo System Racks; found on select Jetson Electric Bikes.

IMPORTANT:
Read carefully and retain for future reference.

JETSON

COOLER BAG

A RackIt Smart Cargo System Accessory*.

MODEL SKU(S): JRCCB-GRY


RAC
KIT

RACKIT

EVERYTHING YOU NEED. EVERY TIME YOU RIDE.

BUILT YOUR COLLECTION OF COMPANION CARRY-ALL ACCESSORIES: BASKETS, BAGS, COOLERS & MORE*

*DEPENDENT ON AVAILABILITY.


JETSON

SAFETY WARNINGS.

Important:

- Your RackIt Companion Carry-All Accessory is only compatible with RackIt Smart Cargo System rear cargo racks, found on select Jetson e-bike models. To see if the cargo rack on your Jetson is part of the RackIt system, consult its user manual at ridejetson.com/product-manuals.
- The addition of cargo with significant weight may affect the performance of your Jetson.
- Never leave your RackIt Companion Carry-All Accessory or any cargo unattended on your Jetson

⚠ Ensure that:

- All hardware on your rear cargo rack is checked and fully tightened prior to each ride.
- The rear cargo rack is securely fastened to the bike frame.
- Your RackIt accessory is securely clicked onto the RackIt rear cargo rack.
- Your cargo is fully contained inside the accessory or is secured directly on top of the rear cargo rack with a bungee cord or strap.
- No accessory straps, handles, or parts are dangling onto the riding surface or near any of your bike's moving parts, including the wheels, pedals, brakes, and chain.
- Your bike's safety reflectors and lights are not obscured by placement of the accessory or your cargo.
- The weight of your cargo is distributed evenly on both sides of the rear cargo rack.
- The combined weight of your accessory and any cargo does not exceed the maximum carrying weight of the rear cargo rack.
- The combined weight of the accessory, cargo, and rider does not exceed the maximum carrying weight of the e-bike.

⚠ Never:

- Use the RackIt rear cargo rack as a seat for another passenger or a platform on which to attach a child seat.
- Modify or disassemble the rear cargo rack or the attachment plate and mechanisms on the underside of your RackIt accessory.
- Use the rear cargo rack to pull a trailer.
- Relocate your RackIt rear cargo rack to a different bike or e-bike.
- Use any RackIt rear cargo racks or accessories on bikes with wheels measuring over 27.5".

CALIFORNIA PROPOSITION 65

⚠ WARNING:

CANCER AND BIRTH DEFECTS OR OTHER REPRODUCTIVE HARM-WWW.P65WARNINGSCA.GOV.

ABOUT YOUR PRODUCT.

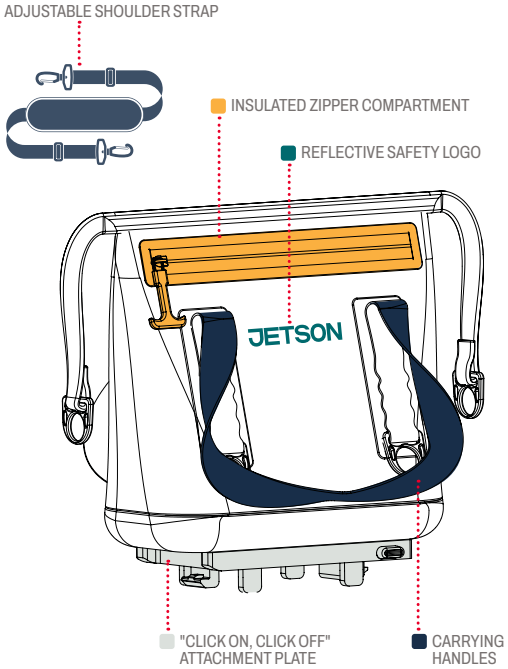

NOTE: IMAGES MAY NOT REFLECT EXACT APPEARANCE OF ACTUAL PRODUCT.

USING YOUR PRODUCT.

ATTACHING YOUR ACCESSORY TO YOUR BIKE'S RACKIT SMART CARGO SYSTEM RACK:

1. LOOP THE FRONT ATTACHMENT HOOK UNDER THE FRONT CROSSBAR OF THE RACK.
2. PUSH UNTIL THE BACK ATTACHMENT HOOK "CLICKS" AROUND THE BACK CROSSBAR OF THE RACK.
3. CHECK THAT YOUR ACCESSORY IS SECURE.
4. START YOUR ADVENTURE.

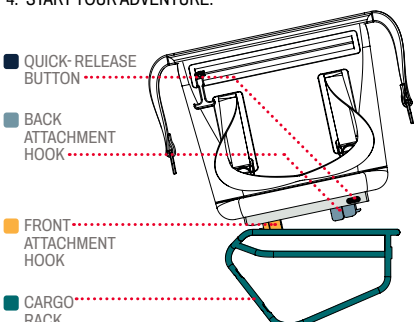



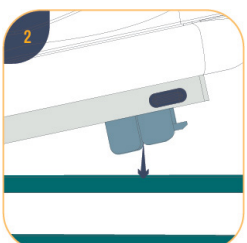

RELEASING YOUR ACCESSORY FROM YOUR BIKE'S RACKIT SMART CARGO SYSTEM RACK:

1. PUSH THE QUICK RELEASE BUTTON.
2. LIFT YOUR ACCESSORY OFF OF THE RACK.
3. CONQUER YOUR DAY.

WARRANTY COVERAGE.

GENERAL LIMITED WARRANTY

YOUR NEW JETSON PRODUCT IS WARRANTED AGAINST DEFECTS IN MATERIALS AND WORKMANSHIP AS INDICATED ON RIDEJETSON.COM/WARRANTY FOR A PERIOD OF TIME FROM THE DATE OF ORIGINAL RETAIL PURCHASE WHEN USED IN ACCORDANCE WITH JETSON'S USER MANUALS (REFER TO RIDEJETSON.COM/SUPPORT). **UNDER THIS WARRANTY, YOU WILL BE ABLE TO DIRECT YOUR CLAIMS TO JETSON EVEN IN SITUATIONS WHERE YOU PURCHASED THE JETSON PRODUCT FROM ONE OF OUR AUTHORIZED RETAILERS.** TO READ THE FULL TERMS OF OUR WARRANTY, VISIT RIDEJETSON.COM/WARRANTY.

KEEP IN TOUCH.

Be sure to follow @ridejetson on social media to learn about fantastic offers, giveaways, and all the latest Jetson news.

JETSON

LOVING YOUR RIDE?

Leave a review at ridejetson.com/reviews. We can't wait to hear from you! #MakeMoves

QUESTIONS? LET US HELP.

RIDEJETSON.COM/SUPPORT
RIDEJETSON.COM/CHAT

1-844-585-7462

To exercise your product's warranty or inquire about warranty coverage, contact us directly.

www.ridejetson.com

JETSON





© 2025, TRURIDE TECH. ALL RIGHTS RESERVED.
MANUFACTURED FOR TRURIDE TECH LLC.
JETSON® IS A REGISTERED TRADEMARK USED UNDER LICENSE FROM JETSTREAM BRANDS LLC.
NO PORTION OF THIS DOCUMENT, INCLUDING SHAPE, GRAPHICS, AND DESIGN, MAY BE REPRODUCED OR TRANSMITTED IN ANY FORM OR BY ANY MEANS.

IMPORTED BY TRURIDE TECH LLC.
PO BOX 461, JERSEY CITY, NJ 07302-9998

DATE CODE: 03/2025
DOCUMENT EDITION: V1.0
MADE IN CHINA