JETSON

Mako

Kids' 6V Electric Ride-On

A guide for your ride.

IMPORTANT: READ CAREFULLY AND RETAIN FOR FUTURE REFERENCE.

MODEL SKU: JMAKO-MGR

Jetson's top two riding rules:
Be safe. Have fun!

Contents

Safety Warnings 4

Warranty Coverage 7

1. About Your Product

1.1 What's in the Box 8

1.2 Product Overview 12

1.3 Product Specs 14

1.4 Online Resources 15

2. Getting Started

2.1 Starting Notes 17

2.2 Connecting the Battery 18

2.3 Inserting the Seat 20

2.4 Attaching the Steering Wheel 22

2.5 Attaching the Side Mirrors 26

2.6 Attaching the Windshield 28

2.7 Assembling & Attaching the Parent Push Bar 31

2.8 Attaching the Rear Wheels 36

2.9 Attaching the Front Wheels 40

2.10 Attaching the Hubcaps 42

2.11 Charging the Battery 44

3. Features & Functions

3.1 Opening & Closing the Doors 46

3.2 Fastening the Seatbelt 46

3.3 Powering On & Off 47

3.4 A Guide to Your Dashboard & Controls 48

3.5 Sound Activation 50

4. Making Moves

4.1 Rider-Controlled Driving 51

4.2 Using the Parental Override Remote Control 52

4.3 Using the Parent Push Bar 54

4.4 Maximizing Speed & Run Time 55

5. Safe Journeying

5.1 Pre-Ride Safety Checks 57

5.2 Helmet Safety 58

5.3 Care & Maintenance 59

Safety Warnings

- Before use, please read the user manual and safety warnings carefully, and make sure you understand and accept all the safety instructions. The user will be responsible for any loss or damage caused by improper use.
- **Failure to use correct charger can result in fire and explosion, resulting in property damage, injury, and death.**
- Before each cycle of operation, the operator shall perform the preoperation checks specified by the manufacturer:
  That all guards and pads originally supplied by the manufacturer are in proper place and in serviceable condition;
  That the braking system is functioning properly; That any and all axle guards, chain guards, or other covers or guards supplied by the manufacturer are in place and in serviceable condition; That tires are in good condition, inflated properly, and have sufficient tread remaining; The area that the product is to be operated should be safe and suitable for safe operation.
- Components shall be maintained and repaired in accordance with the manufacturer's specifications and using only the manufacturer's authorized replacement parts with installation performed by dealers or other skilled persons.
- Don't allow hands, feet, hair, body parts, clothing, or similar articles to come in contact with moving parts, wheels, or drive train, while the bike is in use.
- This product should not be used by children or persons with reduced physical, sensory or mental capabilities, or lack of experience and knowledge, unless they have been given supervision or instruction (IEC 60335-1/A2:2006).
- Unsupervised children should not play with the product (IEC 60335-1/A2:2006).
- Adult supervision is required.
- The rider should not exceed 40 lbs.
- Never use near motor vehicle.
- Units shall not be operated to perform racing, stunt riding, or other maneuvers, which may cause loss of control, or may cause uncontrolled operator/passenger actions or reactions.
- Avoid sharp bumps, drainage grates, and sudden surface changes. Bike may suddenly stop.
- Avoid streets and surfaces with water, sand, gravel, dirt, leaves, and other debris. Wet weather impairs traction, braking and visibility.
- Avoid riding around flammable gas, steam, liquid, or dust that could cause fire.
- Operators shall adhere to all of the manufacturer's recommendations and instructions, as well as comply with all laws and ordinances: Units without headlights shall be operated only with adequate daylight conditions of visibility, and; Owners shall be encouraged to highlight (for conspicuity) using lighting, reflectors, and for low-riding units, signal flags on flexible poles.
- Do not ride at night.
- Only ride the product with adequate daylight conditions for visibility.
- Persons with the following conditions shall be cautioned not to operate: Those with heart conditions; Pregnant women;
  Persons with head, back, or neck ailments, or prior surgeries to those areas of the body; and persons with any mental or physical conditions that may make them susceptible to injury or impair their physical dexterity or mental capabilities to recognize, understand, and perform all of the safety instructions and to be able to assume the hazards inherent in unit use.
- Do not ride after drinking or taking prescription medication.
- Do not carry items when riding.
- Never operate the product barefooted.
- Always wear shoes and keep shoelaces tied.
- Make sure your feet are always placed securely on the pedals.
- Operators always shall use appropriate protective clothing, including but not limited to a helmet, with appropriate certification, and any other equipment recommended by the manufacturer: Always wear protective equipment such as helmet, knee pads, and elbow pads.
- Always give way to pedestrians.
- Be alert to things in front and far away from you.
- Do not allow distractions when riding, such as answering the phone or engaging in any other activities.
- The product cannot be ridden by more than one person.
- When you ride the product along with other riders, always keep a safe distance to avoid a collision.
- When turning, be sure to maintain your balance.
- Replace worn or broken parts immediately.

- The area that the product is to be operated should be safe and suitable for safe operation.
- Check whether all safety labels are in place and understood before riding.
- The owner shall allow the use and operation of the unit after a demonstration that such operators can understand and operate all components of the unit before use.
- Use caution when changing the batteries. Do not change batteries near flammable materials. Remove batteries from the ride-on toy when not in use for long periods of time.
- Prolonged exposure to UV rays, rain and the elements may damage the enclosure materials, store indoors when not in use.
- Devices are not intended for use at elevations greater than 2000 m above sea level.
- WARNING – Risk of Fire and Electric Shock – No User Serviceable Parts.

MODIFICATIONS

Do not attempt to disassemble, modify, repair, or replace the product or any components of the unit without instruction from the Jetson Care Team. This will void any warranty, and can lead to malfunctions which may cause injury.

ADDITIONAL OPERATION PRECAUTIONS

- Do not lift the product off the ground while it is on and the wheels are in motion. This can result in freely spinning wheels, which may cause injury to yourself or others nearby.
- Do not jump on or off the product, and do not jump while using it.
- Always keep your feet firmly planted while in operation.
- The Consumer Product Safety Commission advises that the riding of small wheel diameter ride-on toy at excessive speeds can lead to instability and is not recommended.
- Always wear a properly fitted helmet when you ride your ride-on toy. Do not ride at night. Avoid riding in wet conditions.

MAINTENANCE PRECAUTIONS

For all maintenance repairs and needs beyond the capability of the consumer which may include but not limited to such as proper maintenance of brakes, control cables, bearing adjustments, wheel adjustments, lubrication, reflectors, wheels and handlebar, remote, motors, remote control, gas pedal and seat adjustments, please contact the Jetson Care Team for assistance at:

ridejetson.com/chat
ridejetson.com/support
US & Canada 1-(888) 976-9904

DISPOSAL OF USED BATTERY



Battery may contain hazardous substances which could endanger the environment and human health. This symbol marked on the battery and/or packaging indicates that used battery shall not be treated as municipal waste. Batteries should be disposed of at an appropriate collection point for recycling. By ensuring the used batteries are disposed of correctly, you will help preventing potential negative consequences for the environment and human health. The recycling of materials will help to conserve natural resources. For more information about recycling of used batteries, please contact your local municipality waste disposal service.

NOTICE OF COMPLIANCE

This device complies with Part 15 of the FCC Rules. Operation is subject to the following two conditions: (1) this device may not cause harmful interference, and (2) this device must accept any interference received, including interference that may cause undesired operation.

WARNING: Changes or modifications to this unit not expressly approved by the party responsible for compliance could void the user's authority to operate the equipment.

NOTE: This equipment has been tested and found to comply with the limits for a Class B digital device, pursuant to Part 15 of the FCC Rules. These limits are designed to provide reasonable protection against harmful interference in a residential installation. This equipment generates, uses and can radiate

radio frequency energy and, if not installed and used in accordance with the instructions, may cause harmful interference to radio communications. However, there is no guarantee that interference will not occur in a particular installation. If this equipment does cause harmful interference to radio or television reception, which can be determined by turning the equipment off and on, the user is encouraged to try to correct the interference by one or more of the following measures:

- Reorient or relocate the receiving antenna.
- Increase the separation between the equipment and receiver.
- Connect the equipment into an outlet on a circuit different from that to which the receiver is connected.
- Consult the dealer or an experienced radio/TV technician for help.
- Shielded cables must be used with this unit to ensure compliance with the Class B FCC limits.

FCC ID:
Changes or modifications not expressly approved by the party responsible for compliance could void the user's authority to operate the equipment.

This device complies with Part 15 of the FCC Rules. Operation is subject to the following two conditions: (1) this device may not cause harmful interference, and (2) this device must accept any interference received, including interference that may cause undesired operation.

This equipment has been tested and found to comply with the limits for a Class B digital device, pursuant to Part 15 of the FCC Rules. These limits are designed to provide reasonable protection against harmful interference in a residential installation. This equipment generates, uses and can radiate radio frequency energy and, if not installed and used in accordance with the instructions, may cause harmful interference to radio communications.

However, there is no guarantee that interference will not occur in a particular installation. If this equipment does cause harmful interference to radio or television reception, which can be determined by turning the equipment off and on, the user is encouraged to try to correct the interference by one or more of the following measures:

- Reorient or relocate the receiving antenna.
- Increase the separation between the equipment and receiver.
- Connect the equipment into an outlet on a circuit different from that to which the receiver is connected.
- Consult the dealer or an experienced radio/TV technician for help.

California Proposition 65

⚠WARNING:

This product can expose you to chemicals including Cadmium, which is known to the State of California to cause cancer and birth defects or other reproductive harm. For more information go to: www.P65Warnings.ca.gov.

Warranty Coverage

GENERAL LIMITED WARRANTY
Your new Jetson product is warranted against defects in materials and workmanship as indicated on ridejetson.com/warranty for a period of time from the date of original retail purchase when used in accordance with Jetson's user manuals (refer to ridejetson.com/support). **Under this warranty, you will be able to direct your claims to Jetson even in situations where you purchased the Jetson Product from one of our authorized retailers.** To read the full terms of our warranty, visit ridejetson.com/warranty.

1. About Your Product

1.1 What's in the Box

A. FRAME
B. SEAT WITH SEATBELT
C. STEERING WHEEL
D. LEFT SIDE MIRROR
E. RIGHT SIDE MIRROR
F. WINDSHIELD
G. PARENT PUSH BAR HANDLE WITH REMOTE CONTROL MOUNT
H. UPPER BAR PIECE
I. LOWER BAR PIECE
J. WHEEL (X4)
K. HUBCAP (X4)
L. PARENTAL OVERRIDE REMOTE CONTROL
M. CHARGER

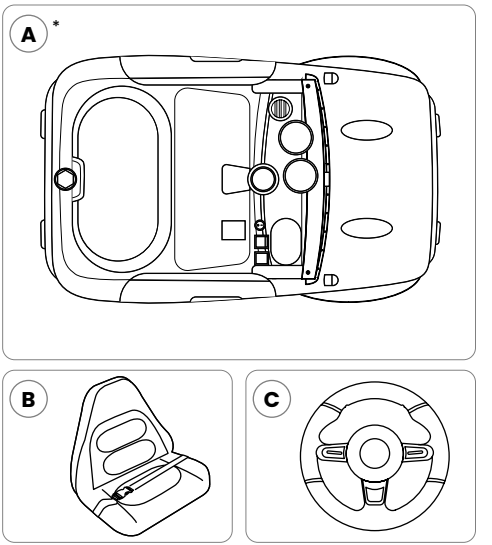

*HARDWARE PRE-INSTALLED. REFER TO ASSEMBLY INSTRUCTIONS FOR MORE DETAILS.

D

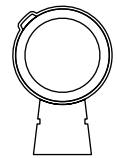

E

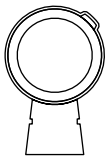

F

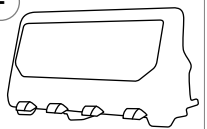

G*

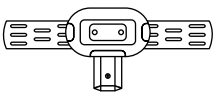

H

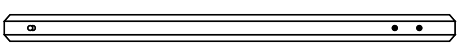

I

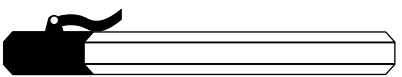

J

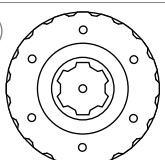

K

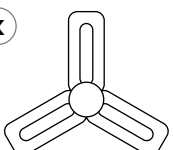

L

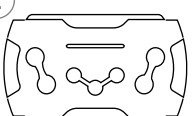

M

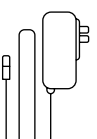

*HARDWARE PRE-INSTALLED. REFER TO ASSEMBLY INSTRUCTIONS FOR MORE DETAILS.

TOOLS INCLUDED FOR ASSEMBLY, ADJUSTMENT, AND MAINTENANCE:

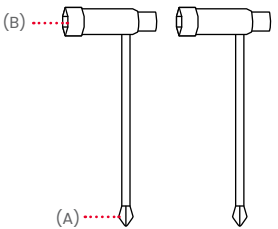

2 COMBINATION PHILLIPS-HEAD SCREWDRIVER (A) AND 14 MM SOCKET WRENCH (B) TOOLS

HARDWARE INCLUDED WITH SOME MODELS FOR WHEEL ATTACHMENT: (DEPENDENT ON PRODUCTION DATE. ON SOME MODELS, WHEEL HARDWARE IS PRE-ATTACHED ON FRONT AND REAR WHEEL AXLES.)



AXLE NUT
(X4; SIZE M8)



LARGE WASHER
(X2; SIZE MX × 20MM × 2MM)



SMALL WASHER
(X4; SIZE M8 × 16MM × 1MM)

1.2 Product Overview

1. SEAT
2. SEAT BELT (ADJUSTABLE)
3. FRONT WHEEL (X2; LEFT AND RIGHT)
4. REAR WHEEL (X2; LEFT AND RIGHT)
5. STEERING WHEEL
   5A. HORN SOUNDS ACTIVATION BUTTON
6. ACCELERATOR PEDAL
7. VEHICLE CHARGING PORT
8. DOOR (X2; LEFT AND RIGHT)
   8A. DOOR LEVER (X2; LEFT AND RIGHT)
9. PARENT PUSH BAR (HEIGHT ADJUSTABLE)
10. REMOTE CONTROL MOUNT
11. REMOTE CONTROL
12. LED HEADLIGHT (X2)
13. DASHBOARD
    13A POWER SWITCH
    13B. FORWARD/REVERSE SWITCH
    13C. BATTERY CHARGE INDICATOR SCREEN
14. CHARGER

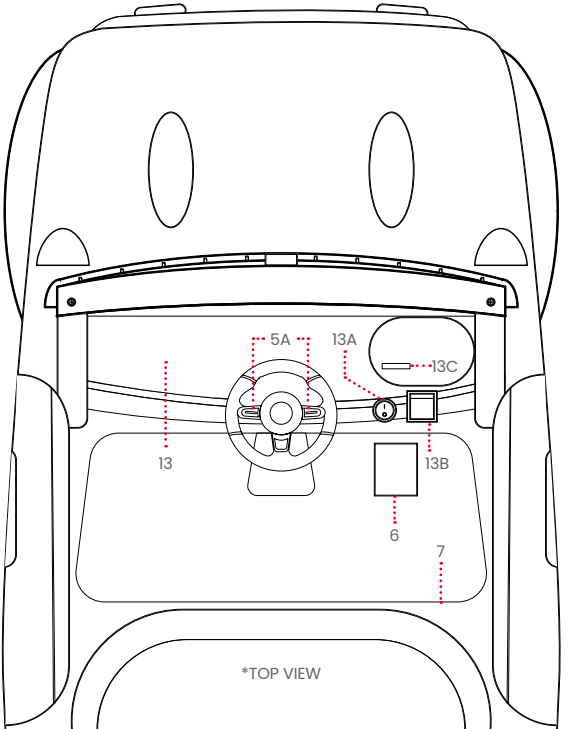

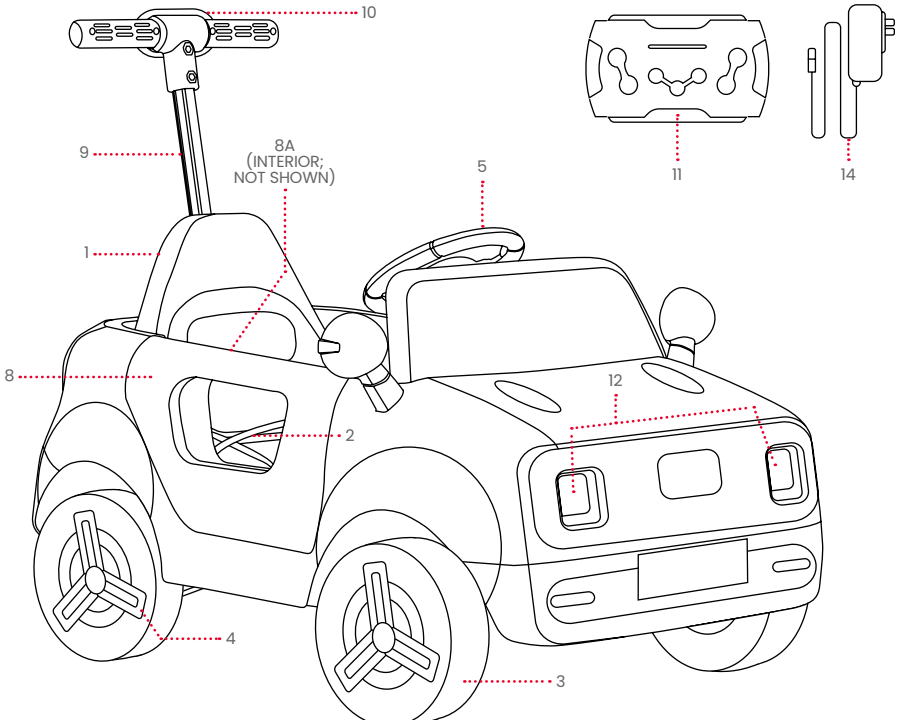
10
9
8A
(INTERIOR;
NOT SHOWN)
5
1
8
2
12
4
3
11
14

1.3 Product Specs

- MAX SPEED IN HIGH SPEED MODE: 3 MPH
- MAX SPEED IN MEDIUM SPEED MODE: 2 MPH
- MAX SPEED IN LOW SPEED MODE: 1.5 MPH
- RUN TIME: UP TO 45 MINS
- BATTERY: RECHARGEABLE 6V, 7AH LEAD-ACID
- REMOTE CONTROL BATTERIES: 2 AAA (NOT INCLUDED)
- MOTOR: 35W (TOTAL)
- PRODUCT WEIGHT: 26 LB
- PRODUCT DIMENSIONS: 36.0″ (L) × 22.8″ (W) × 35.6″ (H)
- WHEEL SIZE: 7.9″ (D) × 2.8″ (W)
- CHARGER: UL-LISTED, DC6V OUTPUT
- CHARGING TIME: UP TO 8 HOURS
- WEIGHT LIMIT: 40 LB
- RECOMMENDED AGE: 2-4 YEARS OLD
- NUMBER OF RIDERS: 1

* PRODUCT RUN TIME, SPEED, BATTERY LIFE, AND OTHER SPECIFICATIONS MAY VARY BASED ON RIDER AND RIDING CONDITIONS. SEE SECTION 4.4 FOR MORE DETAILS ON CONDITIONS THAT CAN AFFECT PERFORMANCE.

1.4 Online Resources



Scan for our most updated Mako onboarding materials and support resources.

2. Getting Started

2.1 Starting Notes

- KICK OFF YOUR ADVENTURE RIGHT: PRIOR TO USE OF THIS PRODUCT, CAREFULLY READ THE ENTIRE USER MANUAL, INCLUDING SAFETY WARNINGS. MAKE SURE YOU UNDERSTAND, ACCEPT, AND ADHERE TO ALL:
  - MANUFACTURER'S RECOMMENDATIONS.
  - SAFETY INSTRUCTIONS AND WARNINGS.
  - LOCAL RIDING AND OPERATIONAL LAWS AND ORDINANCES.

- REMOVE ALL PACKAGING BEFORE BEGINNING ASSEMBLY.

- THE DIRECTIONS GIVEN IN THIS MANUAL—RIGHT, LEFT, FRONT/FORWARD, AND REAR/BACK—ARE ORIENTED AS THE RIDER WOULD SEE THEM WHEN SEATED IN THE VEHICLE. THE "RIGHT SIDE" OF THE VEHICLE, FOR EXAMPLE, IS THE SIDE WHERE THE RIDER'S RIGHT HAND AND FOOT WILL BE.

- DEPENDENT ON PRODUCTION DATE, THE HARDWARE FOR WHEEL ATTACHMENT MAY BE PRE-INSTALLED ON THE AXLE NUTS OR PACKAGED SEPARATELY IN THE BOX.

- IT IS HELPFUL TO HAVE AN EXTRA SET OF HANDS TO HELP WITH ASSEMBLY. GRAB AN ASSISTANT!

⚠WARNING:

FAILURE TO COMPLY WITH THE FOLLOWING INSTRUCTIONS MAY RESULT IN INJURY TO THE CHILD OR OTHERS.
- KEEP SMALL PARTS AWAY FROM CHILDREN DURING ASSEMBLY.
- ACCESSORY MUST BE ASSEMBLED AND REMOVED BY AN ADULT.
- FREQUENTLY INSPECT THE PRODUCT FOR DAMAGE.

* ADULTS MUST ASSIST CHILDREN IN THE ASSEMBLY AND INITIAL ADJUSTMENT PROCEDURES OF THE PRODUCT.

2.2 Connecting the Battery

1. ENSURE THAT THE POWER SWITCH IS IN THE “OFF” POSITION. (SEE SECTION 3.3)
2. REMOVE THE CAP ON THE BATTERY TERMINAL CONNECTOR. DISCARD.
3. CLICK THE ELECTRICAL WIRING TIP INTO THE BATTERY TERMINAL CONNECTOR.
4. CHECK THAT THE CONNECTION IS SECURE.

⚠ **IMPORTANT:** HANDLE ELECTRICAL COMPONENTS WITH CAUTION.

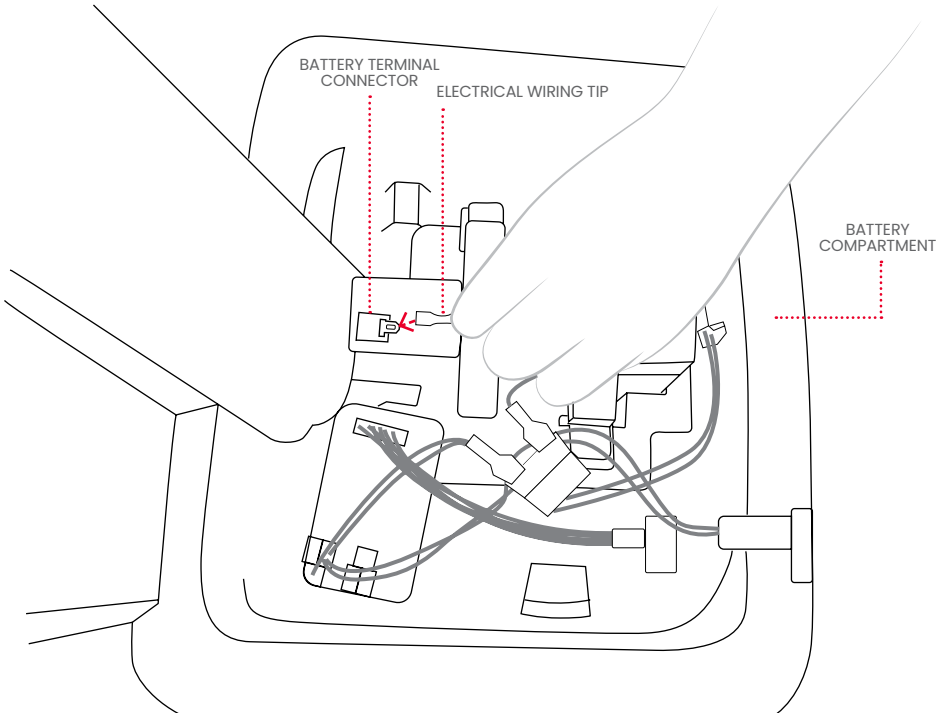
BATTERY TERMINAL CONNECTOR
ELECTRICAL WIRING TIP
BATTERY COMPARTMENT

2.3 Inserting the Seat

THE HARDWARE USED FOR THIS SECTION IS PRE-INSTALLED IN THE FRAME.

1. LOOSEN AND REMOVE THE PRE-INSTALLED SCREWS (12MM) AT THE FRONT CORNERS OF THE SEAT AREA IN THE FRAME (A) BY TWISTING THEM OUT COUNTERCLOCKWISE WITH THE PHILLIPS-HEAD SCREWDRIVER. (2 TOTAL; LEFT AND RIGHT) SET THE SCREWS ASIDE.
2. POSITION THE SEAT (B) ABOVE THE FRAME SUCH THAT:
   • THE SEATBELT STRAPS ARE ON TOP OF THE SEAT AREA.
   • THE SEAT BACK IS VERTICAL.
   • THE TABS ON THE BACK SIDE OF THE SEAT BACK ARE IN LINE WITH THE TAB HOLES AT THE BACK OF THE SEAT AREA IN THE PASSENGER AREA OF THE FRAME.
3. TILT THE SEAT BACKWARDS AND LOWER IT INTO PLACE UNTIL THE TABS ON THE BACK SIDE OF THE SEAT BACK CLICK INTO THE TAB HOLES.
4. LOWER THE FRONT OF THE SEAT ONTO THE SEAT PLATFORM. ENSURE THAT THE SCREW HOLES IN THE FRONT CORNERS OF THE SEAT ARE ALIGNED WITH THE SCREW HOLES AT THE FRONT CORNERS OF THE SEAT PLATFORM.
5. INSERT 1 REMOVED SCREW INTO EACH SET OF ALIGNED HOLES BY TWISTING IT IN CLOCKWISE (2 TOTAL; LEFT AND RIGHT SIDE OF SEAT). TIGHTEN THE SCREWS WITH THE PHILLIPS-HEAD SCREWDRIVER.
6. CHECK THAT THE SEAT IS SECURE IN THE FRAME.

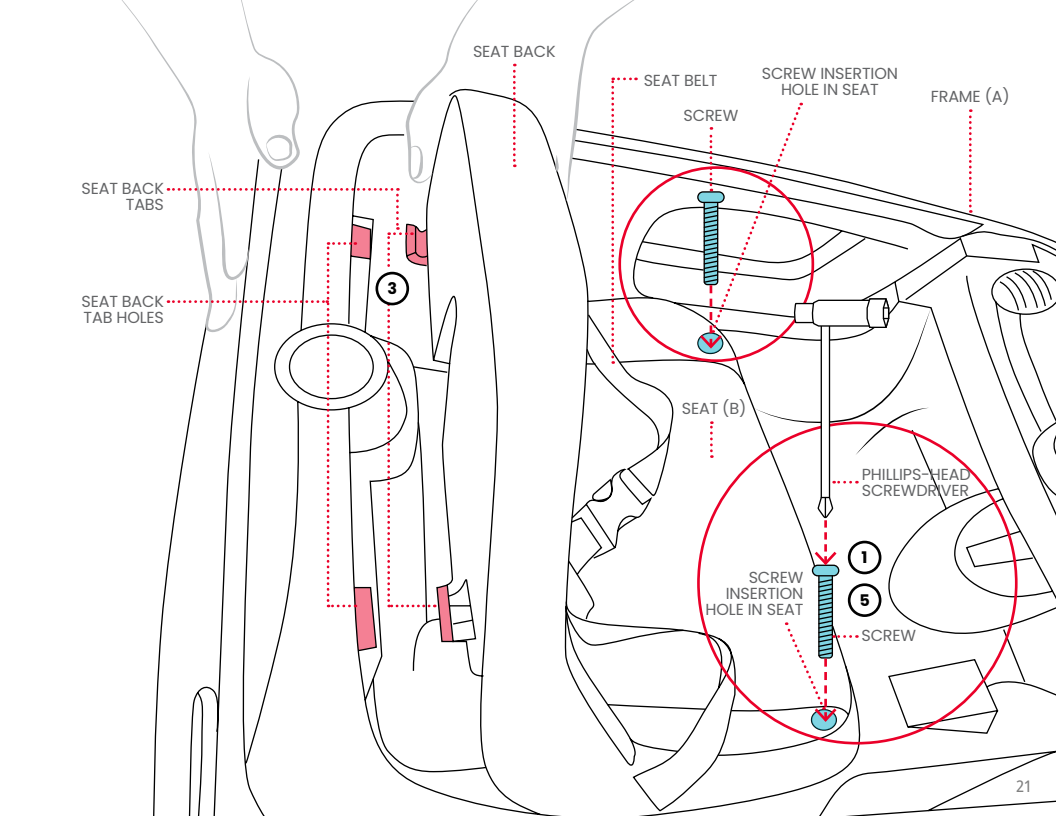
SEAT BACK
SEAT BELT
SCREW INSERTION HOLE IN SEAT
FRAME (A)
SCREW
SEAT BACK TABS
SEAT BACK TAB HOLES
3
SEAT (B)
PHILLIPS-HEAD SCREWDRIVER
1
5
SCREW INSERTION HOLE IN SEAT
SCREW

2.4 Attaching the Steering Wheel

THE HARDWARE USED FOR THIS SECTION IS PRE-INSTALLED IN THE STEERING ROD.

1. HOLD THE PRE-INSTALLED NUT (M5) ON THE STEERING ROD STEADY WITH YOUR FINGERS. LOOSEN AND REMOVE THE PRE-INSTALLED BOLT (M5 × 35MM) BY TWISTING IT OUT COUNTERCLOCKWISE WITH THE PHILLIPS-HEAD SCREWDRIVER. SET THE NUT AND BOLT ASIDE.
2. UNLOOP THE KNOT IN THE WIRES EXTENDING FROM THE TOP OF THE STEERING COLUMN.
3. HOLD THE STEERING WHEEL IN PLACE OVER THE STEERING COLUMN. CLICK THE INSERTION COUPLER AT THE END OF THE WIRES EXTENDING FROM THE STEERING WHEEL STEM INTO THE RECEIVING COUPLER AT THE END OF THE WIRES EXTENDING FROM THE STEERING COLUMN.
   ⚠ **IMPORTANT:** HANDLE ELECTRICAL COMPONENTS WITH CAUTION.

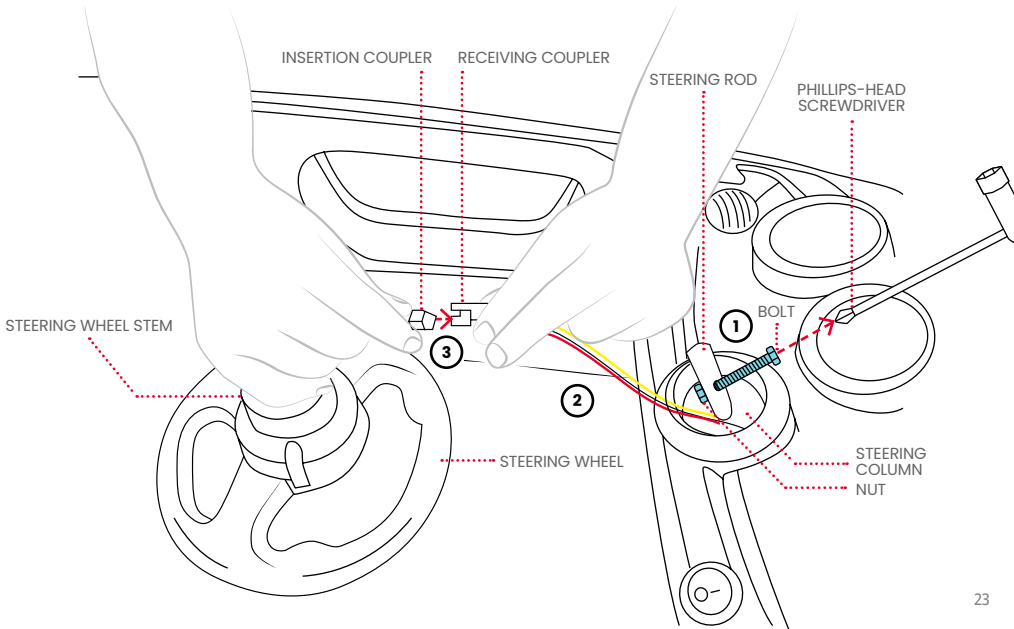
INSERTION COUPLER
RECEIVING COUPLER
STEERING ROD
PHILLIPS-HEAD SCREWDRIVER
STEERING WHEEL STEM
BOLT
1
2
3
STEERING WHEEL
STEERING COLUMN
NUT

4. TUCK THE WIRES INTO THE CAVITY OF THE STEERING WHEEL (F) STEM, AND SLIDE THE STEM ONTO THE STEERING ROD (E).
   ⚠ **IMPORTANT:** ENSURE THAT NO WIRING IS VISIBLE AND EXPOSED OUTSIDE OF THE STEERING WHEEL STEM.
5. POSITION THE STEERING WHEEL SUCH THAT THE HOLES IN THE SIDES OF THE STEERING WHEEL STEM ARE ALIGNED WITH THE HOLES IN THE STEERING ROD.
6. FROM THE RIGHT SIDE, REINSERT THE REMOVED BOLT THROUGH THE HOLES IN THE STEERING WHEEL STEM BY TWISTING IT IN CLOCKWISE UNTIL THE TIP EMERGES ON THE LEFT SIDE.
7. TWIST THE REMOVED NUT CLOCKWISE ONTO THE TIP OF THE BOLT. HOLD THE NUT STEADY WITH YOUR FINGERS WHILE YOU TIGHTEN THE BOLT INTO IT BY TURNING THE BOLT CLOCKWISE WITH THE PHILLIPS-HEAD SCREWDRIVER.
8. CHECK THAT THE STEERING WHEEL IS SECURE.

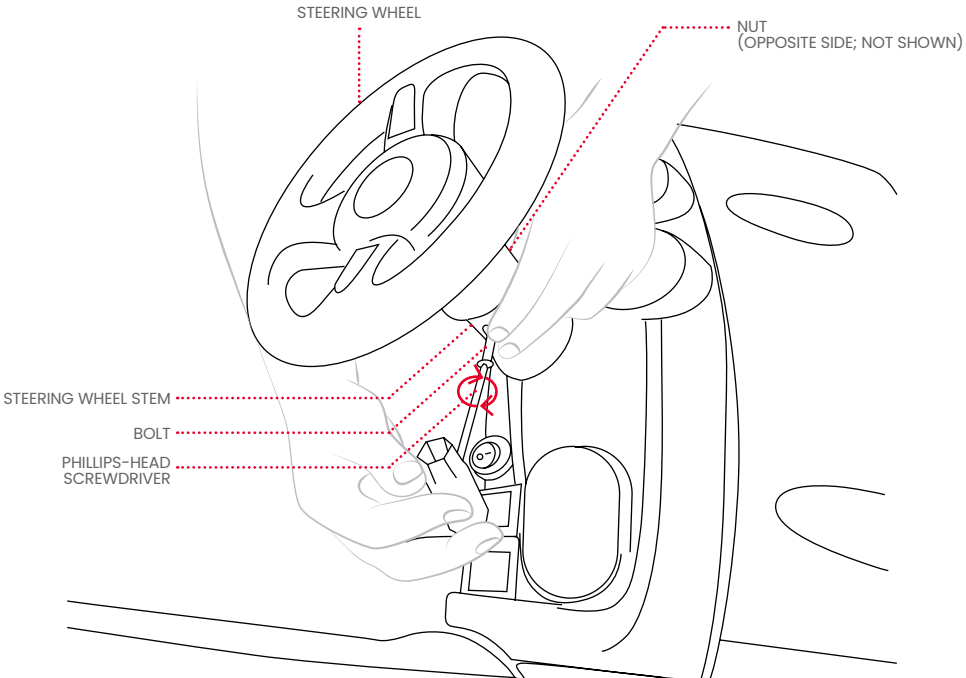
STEERING WHEEL
NUT
(OPPOSITE SIDE; NOT SHOWN)
STEERING WHEEL STEM
BOLT
PHILLIPS-HEAD
SCREWDRIVER

2.5 Attaching the Side Mirrors

1. POP THE STEM OF THE LEFT SIDE MIRROR (D) INTO THE LEFT SIDE MIRROR INSERTION HOLE.
2. POP THE STEM OF THE RIGHT SIDE MIRROR (E) INTO THE RIGHT SIDE MIRROR INSERTION HOLE.
3. CHECK THAT THE SIDE MIRRORS ARE SECURE IN THE FRAME (A).

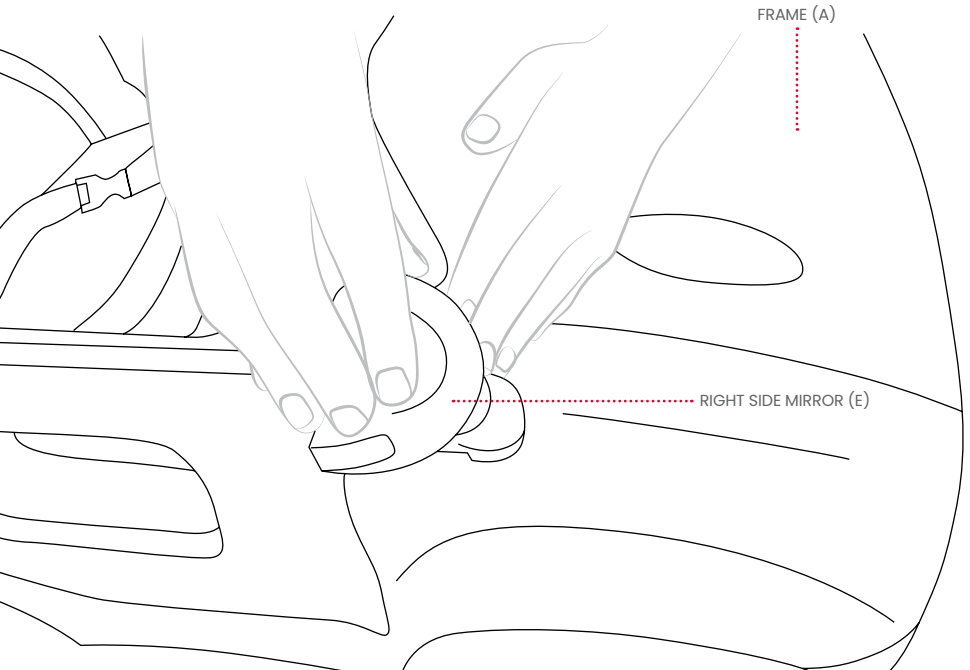
FRAME (A)
RIGHT SIDE MIRROR (E)

2.6 Attaching the Windshield

1. POSITION THE WINDSHIELD (F) ABOVE THE FRAME (A) SUCH THAT:
   - THE TABS ARE POINTING DOWN.
   - THE TABS ARE ALIGNED WITH THE TAB HOLES IN THE TOP OF THE FRAME IN FRONT OF THE DASHBOARD.
   - THE WINDSHIELD IS CURVED TOWARD THE PASSENGER AREA.
2. POP THE TABS INTO THE TAB HOLES TO ATTACH THE WINDSHIELD.
3. CHECK THAT THE WINDSHIELD IS SECURE ON THE FRAME.

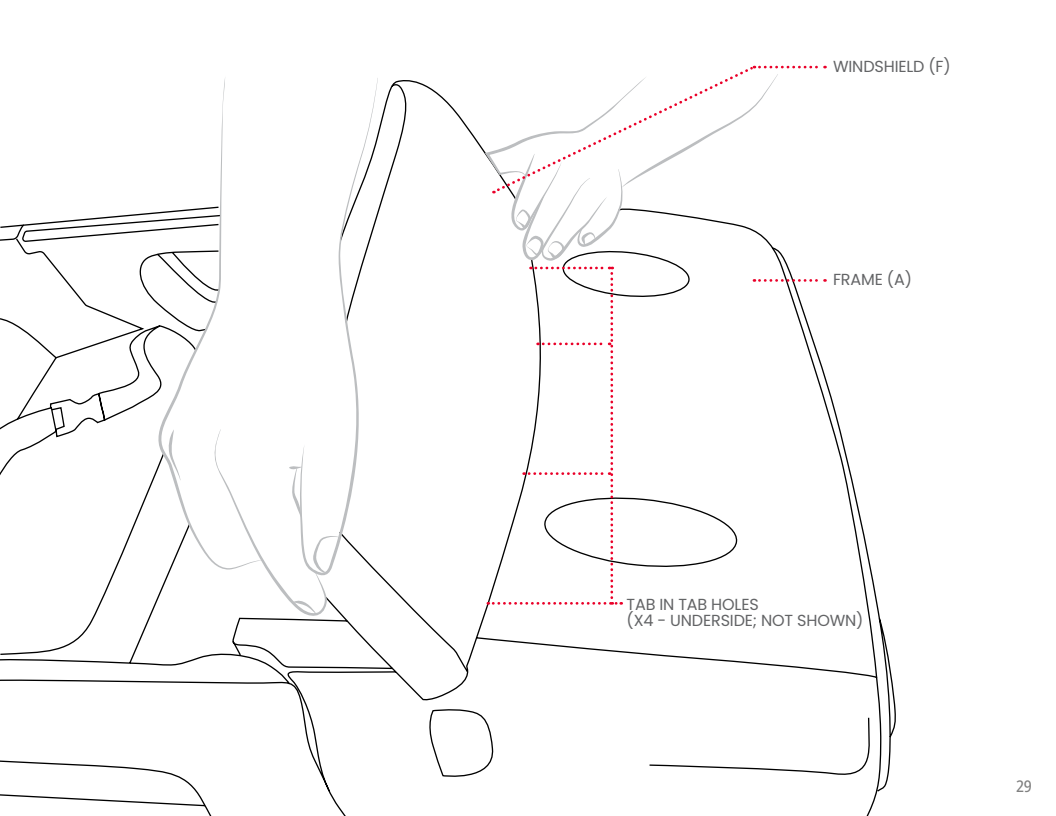
WINDSHIELD (F)
FRAME (A)
TAB IN TAB HOLES
(X4 - UNDERSIDE; NOT SHOWN)

2.7 Assembling & Attaching the Parent Push Bar

THE HARDWARE USED IN THIS SECTION IS PRE-INSTALLED ON THE STEM OF THE PARENT PUSH BAR HANDLE.

1. LOOSEN AND REMOVE THE 2 PRE-INSTALLED BOLTS (M5 × 35MM) FROM THE STEM OF THE PARENT PUSH BAR HANDLE (G) WITH REMOTE CONTROL MOUNT BY TWISTING THEM COUNTERCLOCKWISE. SET THE BOLTS ASIDE.
2. SLIDE THE HANDLE STEM ONTO THE TIP OF THE UPPER BAR PIECE (H) WITH PRE-DRILLED HOLES FOR HARDWARE. ENSURE THAT:
   - THE BOLT HOLES IN THE HANDLE STEM ARE ALIGNED WITH THE BOLT HOLES IN THE BAR.
   - THE PIN IN THE UPPER BAR PIECE IS FACING YOU.
   - THE REMOTE CONTROL MOUNT IS FACING YOU.
3. INSERT 1 REMOVED BOLT INTO EACH SET OF ALIGNED HOLES HANDLE STEM AND UPPER BAR PIECE BY TWISTING IT IN CLOCKWISE (2 TOTAL). TIGHTEN EACH BOLT WITH THE PHILLIPS-HEAD SCREWDRIVER.
4. CHECK THAT THE HANDLE IS SECURE ON THE UPPER BAR PIECE. SET ASIDE.

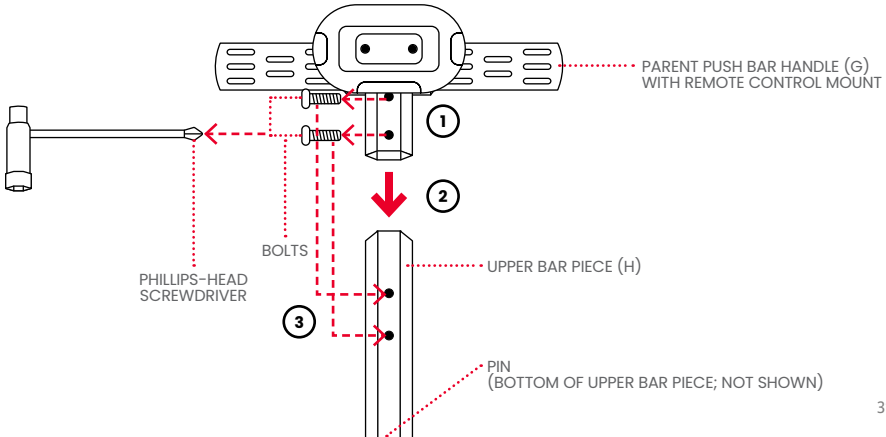

5. HOLD THE LOWER BAR PIECE (I) ABOVE THE PUSH BAR CHANNEL AT THE REAR OF THE FRAME (A) SUCH THAT:
   • THE CLAMP IS AT THE TOP AND THE PIN IS AT THE BOTTOM.
   • THE CLAMP AND PIN ARE FACING AWAY FROM THE SEAT.
6. WHILE PRESSING IN THE PIN, SLIDE THE LOWER BAR PIECE INTO THE PUSH BAR CHANNEL.
7. CAREFULLY LIFT THE BACK OF THE FRAME UP SO YOU CAN SEE THE UNDERSIDE OF THE FRAME. IN THE CENTER HOLE AT THE REAR OF THE FRAME UNDERSIDE, LOCATE THE PIN ON THE NOW INSERTED LOWER BAR PIECE.
8. THROUGH ONE REAR WHEEL SPACE, REACH INTO THE UNDERSIDE OF THE FRAME. WHILE PRESSING IN THE PIN, SLIDE THE LOWER BAR PIECE FURTHER INTO THE PUSH BAR CHANNEL UNTIL THE PIN POPS INTO THE PIN HOLE AT THE BASE OF THE CHANNEL.

9. CAREFULLY LOWER THE FRAME BACK DOWN ON YOUR WORK SURFACE. CHECK THAT THE LOWER BAR PIECE IS SECURE IN THE FRAME.
10. PULL OPEN THE CLAMP LATCH ON THE LOWER BAR PIECE.

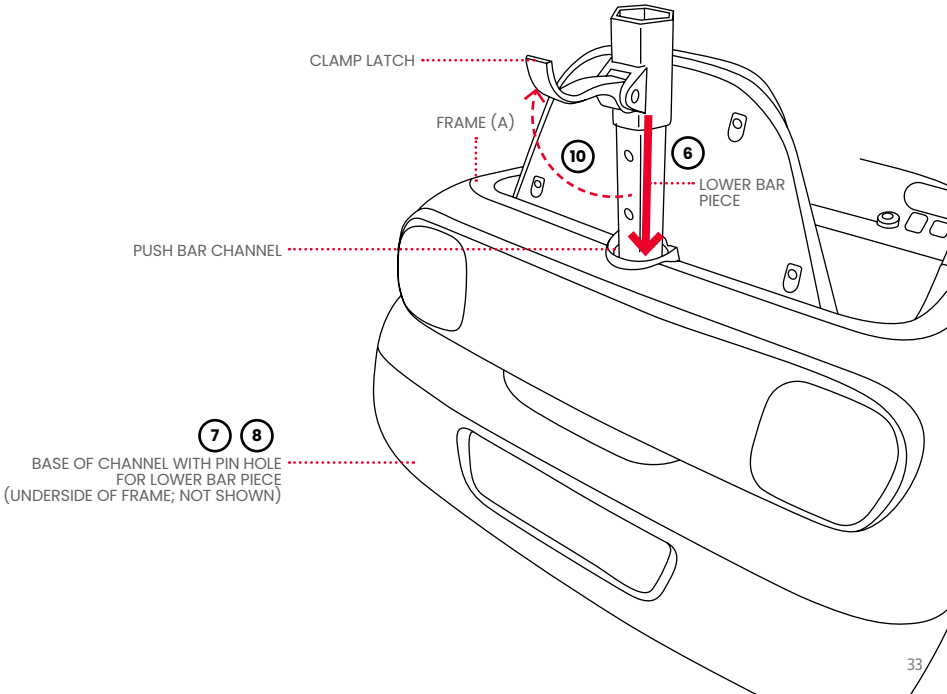

11. HOLD THE UPPER BAR PIECE WITH ATTACHED HANDLE ABOVE THE CLAMP OPENING SUCH THAT:
    - THE HANDLE IS AT THE TOP AND THE PIN IS AT THE BOTTOM.
    - THE PIN ON THE UPPER BAR PIECE IS FACING AWAY FROM THE SEAT.
12. WHILE PRESSING IN THE PIN, SLIDE THE UPPER BAR PIECE WITH HANDLE INTO THE LOWER BAR PIECE UNTIL THE PIN POPS INTO THE PIN HOLE ON THE LOWER BAR.
13. PUSH THE CLAMP LATCH DOWN.

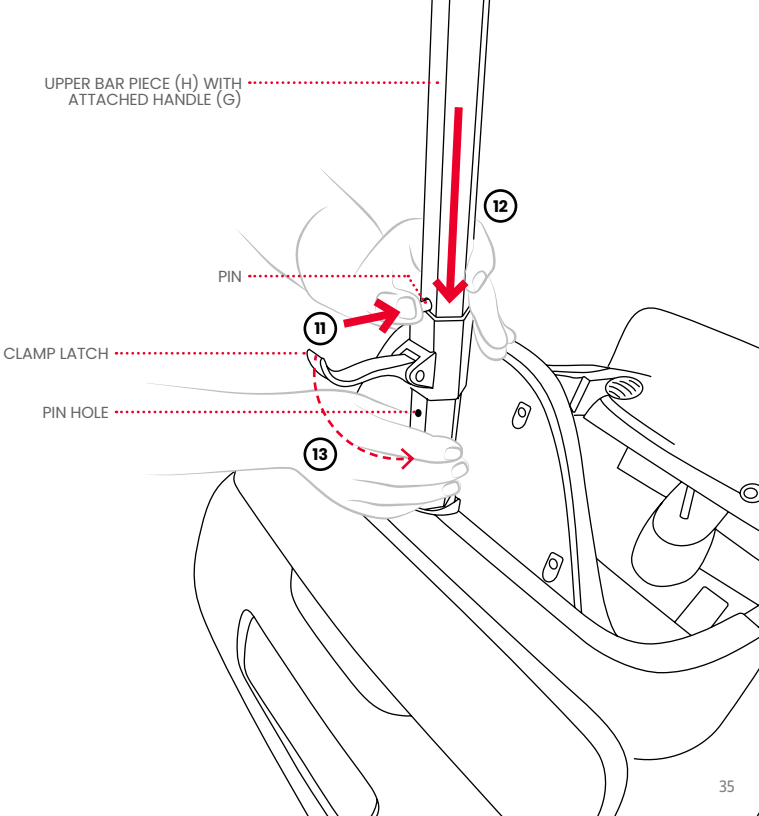
UPPER BAR PIECE (H) WITH ATTACHED HANDLE (G)
12
PIN
11
CLAMP LATCH
PIN HOLE
13

2.8 Attaching the Rear Wheels

IMPORTANT: DEPENDENT ON YOUR MODEL'S PRODUCTION DATE, THE HARDWARE USED IN THIS SECTION MAY BE PRE-INSTALLED ON BOTH SIDES OF THE REAR AXLE OR PACKAGED SEPARATELY IN THE BOX. **IF PACKAGED SEPARATELY, SKIP TO STEP 3.**

IF HARDWARE IS PRE-INSTALLED ON THE REAR AXLE:

1. LOOSEN AND REMOVE THE AXLE NUTS (M8) FROM BOTH SIDES OF THE AXLE BY TWISTING EACH COUNTERCLOCKWISE WITH THE SOCKET WRENCH. (2 TOTAL; LEFT AND RIGHT)
2. SLIDE THE PRE-INSTALLED SMALL WASHER (M8 × 16MM × 1MM) OFF EACH SIDE OF THE AXLE. (2 TOTAL; LEFT AND RIGHT) SET THE AXLE NUTS AND WASHERS ASIDE.

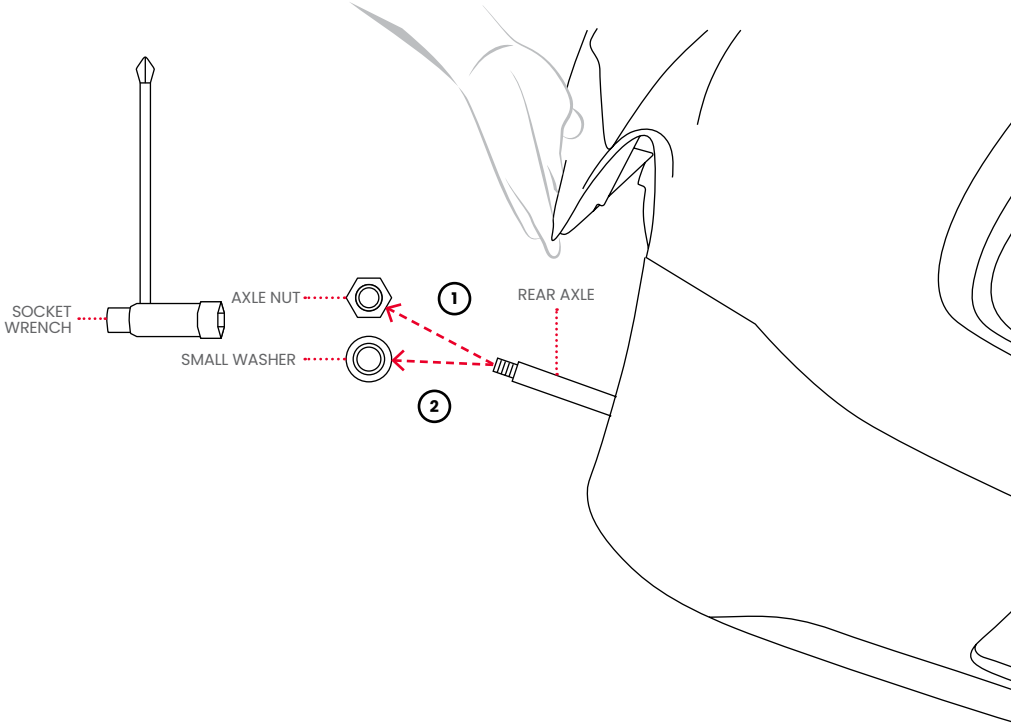
SOCKET WRENCH
AXLE NUT
SMALL WASHER
1
2
REAR AXLE

FOR ALL MODELS:

3. LEADING WITH THE GEAR ON 1 WHEEL (J), SIDE THE WHEEL ONTO 1 SIDE OF THE REAR AXLE. ENSURE THAT THE GEAR FITS SNUGLY INTO THE GEAR BOX.
4. SLIDE 1 SMALL WASHER ONTO THE AXLE NEXT TO THE WHEEL.
5. TWIST 1 AXLE NUT CLOCKWISE ONTO THE TIP OF THE AXLE NEXT TO THE WASHER. TIGHTEN THE NUT WITH THE SOCKET WRENCH.
   IMPORTANT: TAKE CARE NOT TO OVER-TIGHTEN THE NUT, AS OVER-TIGHTENING CAN CAUSE THE WHEEL TO CRACK.
6. REPEAT STEPS 3 – 5 ON THE OTHER SIDE OF THE VEHICLE WITH A 2ND WHEEL AND THE REMAINING WASHER AND AXLE NUT.
7. CHECK THAT THE REAR WHEELS ARE SECURE AND CAN ROTATE FREELY.

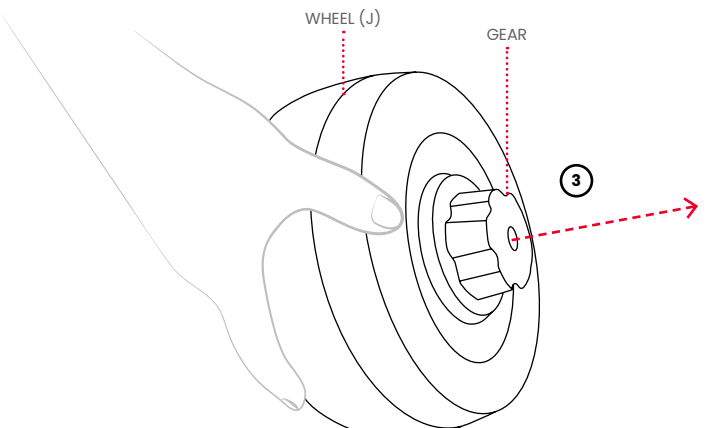

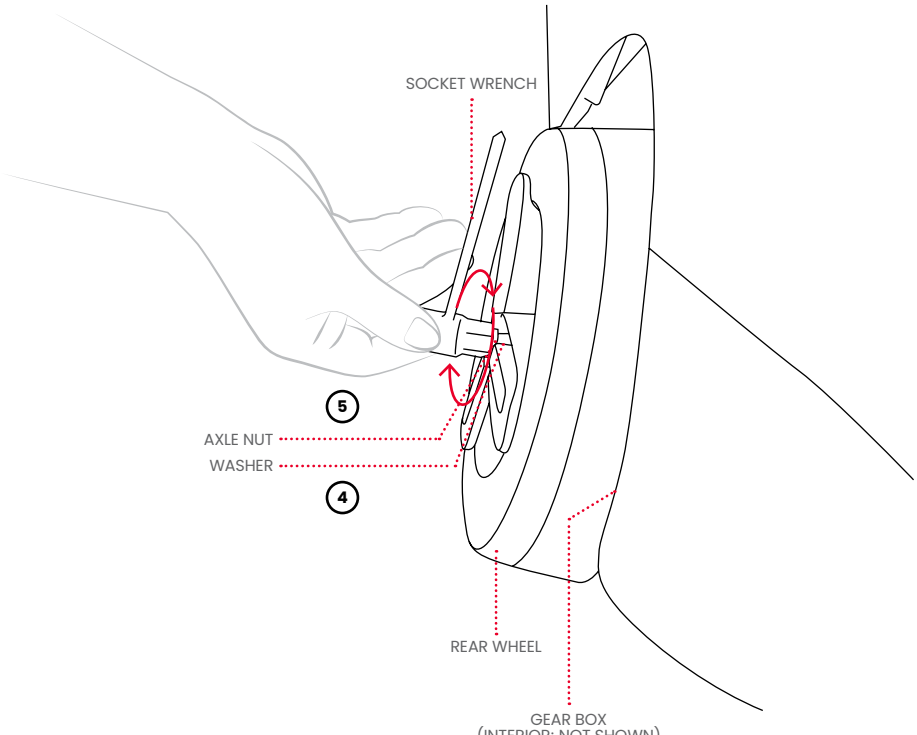
SOCKET WRENCH
5
AXLE NUT
WASHER
4
REAR WHEEL
GEAR BOX
(INTERIOR; NOT SHOWN)

2.9 Attaching the Front Wheels

IMPORTANT: DEPENDENT ON YOUR MODEL'S PRODUCTION DATE, THE HARDWARE USED IN THIS SECTION MAY BE PRE-INSTALLED ON BOTH SIDES OF THE FRONT AXLE OR PACKAGED SEPARATELY IN THE BOX. **IF PACKAGED SEPARATELY, SKIP TO STEP 3.**

IF HARDWARE IS PRE-INSTALLED ON YOUR FRONT AXLE:

1. LOOSEN AND REMOVE THE PRE-INSTALLED AXLE NUTS (M8) FROM BOTH SIDES OF THE FRONT AXLE BY TWISTING EACH COUNTERCLOCKWISE WITH THE SOCKET WRENCH. (2 TOTAL; LEFT AND RIGHT)
2. SLIDE 2 WASHERS, ONE LARGE AND ONE SMALL, OFF OF EACH SIDE OF THE AXLE (4 TOTAL; 2 EACH LEFT AND RIGHT).

ALL MODELS:

3. SLIDE ONE LARGE WASHER (M10 × 20MM × 2MM) ONTO EACH SIDE OF THE FRONT AXLE (2 TOTAL; LEFT AND RIGHT)
4. LEADING WITH THE GEAR ON 1 WHEEL (J), SIDE THE WHEEL ONTO 1 SIDE OF THE FRONT AXLE.
5. SLIDE 1 SMALL WASHER(M8 × 16MM × 1MM) ONTO THE AXLE NEXT TO THE WHEEL.
6. TWIST 1 REMOVED AXLE NUT CLOCKWISE ONTO THE TIP OF THE AXLE NEXT TO THE WASHER. TIGHTEN THE NUT WITH THE SOCKET WRENCH.
   IMPORTANT: TAKE CARE NOT TO OVER-TIGHTEN THE NUT, AS OVER-TIGHTENING CAN CAUSE THE WHEEL TO CRACK.
7. REPEAT STEPS 3 – 5 ON THE OTHER SIDE OF THE VEHICLE WITH THE LAST WHEEL AND THE REMAINING WASHER AND AXLE NUT.
8. CHECK THAT THE FRONT WHEELS ARE SECURE AND CAN ROTATE FREELY.

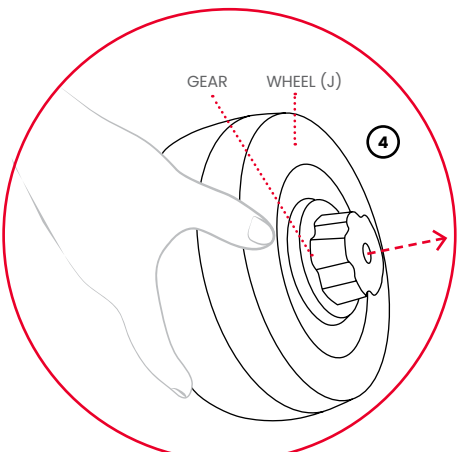

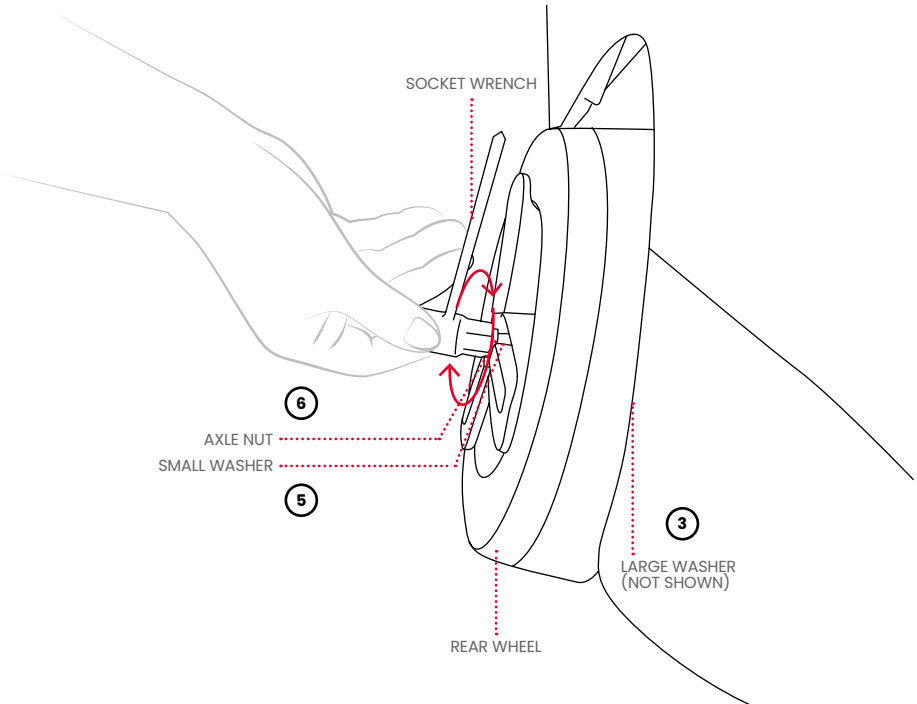
SOCKET WRENCH
6
AXLE NUT
SMALL WASHER
5
3
LARGE WASHER
(NOT SHOWN)
REAR WHEEL

2.10 Attaching the Hubcaps

1. LEADING WITH THE TAB SIDE OF 1 HUBCAP (K), POP THE HUBCAP INTO THE HUBCAP CHANNEL ON 1 WHEEL (J).
2. REPEAT WITH THE 3 REMAINING HUBCAPS ON THE 3 OTHER WHEELS.
3. CHECK THAT THE HUBCAPS ARE SECURE ON THE WHEELS.

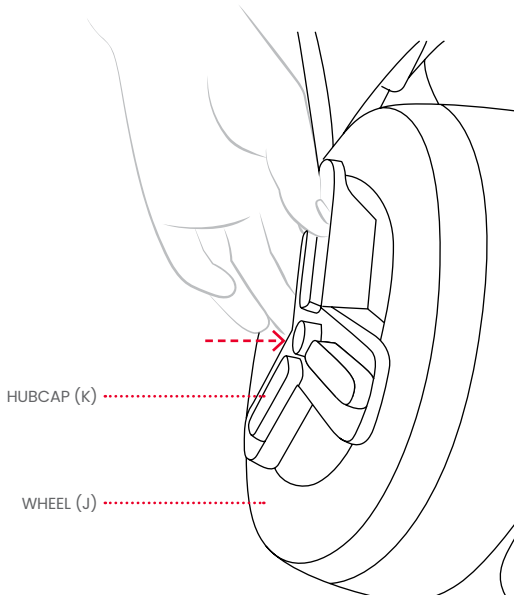

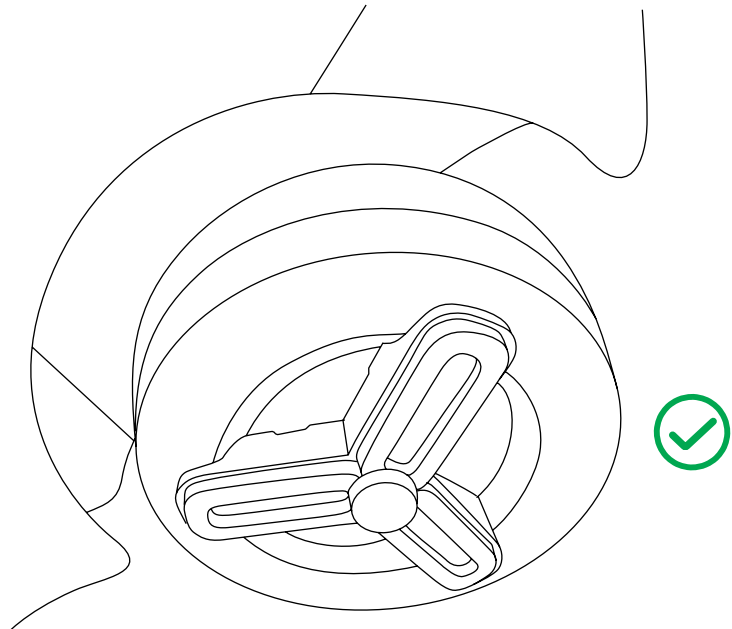

2.11 Charging the Battery

IMPORTANT: TO PREP THE BATTERY FOR LONG-TERM USE, AN EXTENDED INITIAL CHARGING SESSION IS NECESSARY. BEFORE RIDING THE MAKO FOR THE FIRST TIME, CHARGE THE BATTERY FOR A MINIMUM OF 18 HOURS—EVEN IF THE CHARGING INDICATOR LIGHT ON THE CHARGER IS ILLUMINATED IN GREEN. THEN, CHARGE ONLY UNTIL THE BATTERY POWER IS FULL—ABOUT 8 HOURS PER CHARGING SESSION.

1. PLUG THE CHARGER INTO THE WALL, AND THEN PLUG THE CHARGER CORD INTO THE CHARGING PORT IN THE VEHICLE.
2. WHEN THE INDICATOR LIGHT ON THE CHARGER TURNS FROM RED TO GREEN, YOUR BATTERY HAS REACHED FULL CHARGE. REMOVE THE CHARGER FROM THE VEHICLE CHARGING PORT AND UNPLUG THE CHARGER FROM THE WALL OUTLET.

IMPORTANT CHARGING NOTES:

- ONLY USE THE INCLUDED CHARGER OR ONE OBTAINED DIRECTLY THROUGH JETSON LABELED WITH: JT-DC060V0500-E OR THE PART SKU PJMAKO-CH.

⚠ FAILURE TO USE CORRECT CHARGER CAN RESULT IN FIRE AND EXPLOSION.

- NEVER TURN ON THE VEHICLE WHILE IT IS CHARGING.
- FOR BEST BATTERY HEALTH, CHARGE THE BATTERY FULLY DURING EACH CHARGING SESSION—ABOUT 8 HOURS.
- NEVER LEAVE YOUR VEHICLE CHARGING OVERNIGHT OR FOR EXTENDED PERIODS OF TIME.
- DO NOT ATTEMPT TO REMOVE OR DISASSEMBLE THE BATTERY.
- CHARGING AMBIENT TEMPERATURE RANGE: 32°F(0°C)-104°F(40°C)
- OPERATING AMBIENT TEMPERATURE RANGE: 32°F(0°C)-104°F(40°C)

CHARGING INDICATOR LIGHT ON THE CHARGER

- CHARGING

- CHARGING COMPLETE

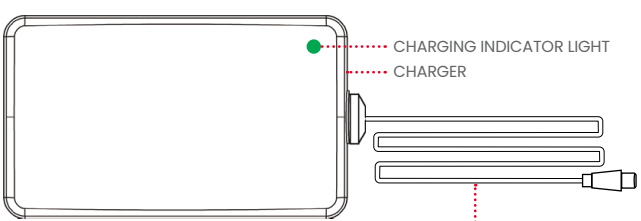

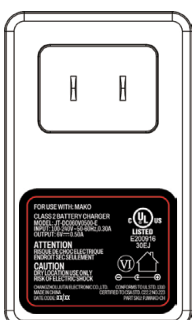

THIS IS THE MARKING YOUR CHARGER WILL HAVE.

3. Features & Functions

3.1 Opening & Closing the Doors

TO OPEN THE DOOR: SLIDE THE DOOR LEVER AND PIVOT THE DOOR AWAY FROM THE FRAME.
TO CLOSE THE DOOR: PUSH OR PULL THE DOOR BACK INTO THE FRAME.

3.2 Fastening the Seatbelt

POSITION BOTH STRAPS OF THE SEATBELT OVER THE LAP OF THE RIDER. CLICK THE INSERTION CLIP INTO THE RECEIVING CLIP. CHECK THAT THE BELT IS SECURE AND SNUG OVER THE RIDER'S LAP. IF NECESSARY, SHORTEN OR LENGTHEN THE BELT BY MOVING THE ADJUSTMENT SLIDE BUCKLE ALONG THE STRAP.

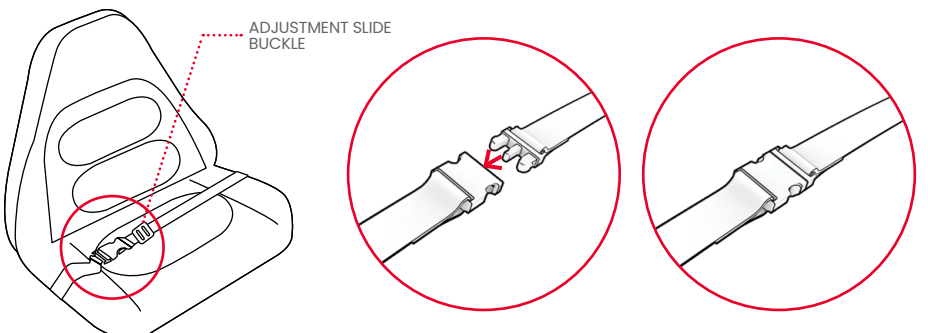

⚠ **IMPORTANT:** ENSURE THAT CHILD IS SECURELY FASTENED BY THE SEAT BELT BEFORE POWERING ON THE MAKO.

3.3 Powering On & Off

TO TURN THE MAKO ON OR OFF: QUICK-PRESS THE POWER BUTTON.

THE HEADLIGHTS WILL ILLUMINATE WHENEVER THE VEHICLE IS POWERED ON.

3.4 A Guide to Your Dashboard & Controls

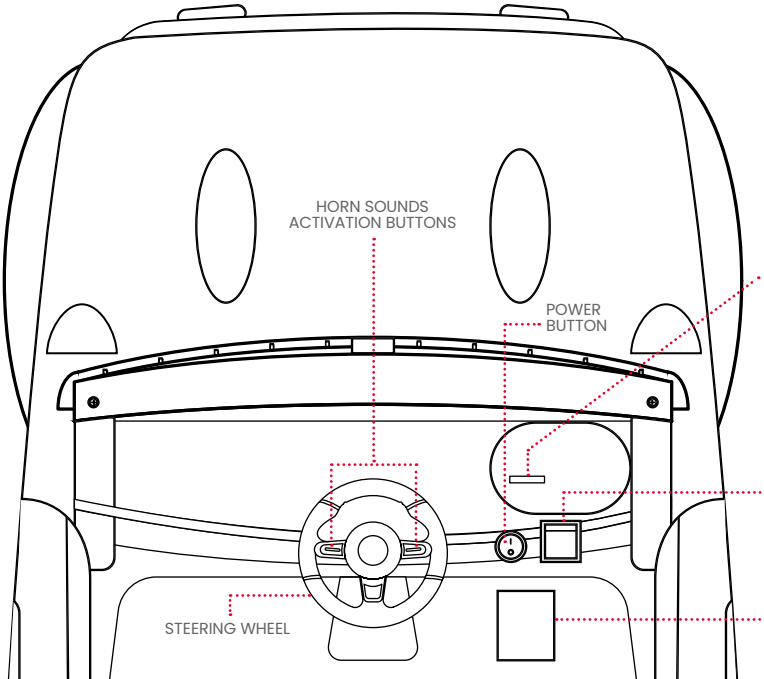

BATTERY CHARGE LEVEL

BATTERY CHARGE INDICATOR SCREEN ILLUMINATION			
CHARGE PERCENTAGE	65-100%	34-65%	1-33% (CHARGE YOUR BATTERY NOW!)

IMPORTANT: WHEN THE BATTERY CHARGE DEPLETES TO 0%, THE VEHICLE WILL POWER OFF. CHARGE THE VEHICLE TO FULL POWER (SECTION 2.11) PRIOR TO YOUR NEXT RIDE.

3.5 Sound Activation

ENGINE SOUNDS ACTIVATE WHEN THE UNIT IS POWERED ON.

ACTIVATE HORN SOUNDS BY PUSHING THE BUTTONS ON THE STEERING WHEEL.

4. Making Moves

4.1 Rider-Controlled Driving

TO MOVE THE MAKO: PUSH DOWN ON THE ACCELERATOR PEDAL.
TO SLOW DOWN: EASE UP ON THE PEDAL.
TO STOP: RELEASE THE ACCELERATOR PEDAL.

TO TURN: ROTATE THE STEERING WHEEL TO THE LEFT OR RIGHT.

TO CHANGE DIRECTION: TOGGLE THE DIRECTION SWITCH TO MOVE FORWARD △ OR BACKWARD ▽.

NOTE: USE THE PARENTAL OVERRIDE REMOTE CONTROL TO CHANGE SPEED. (SECTION 4.2)

4.2 Using the Parental Override Remote Control

TO INSERT BATTERIES IN THE REMOTE CONTROL:

1. LOOSEN THE SCREW ON THE BATTERY COMPARTMENT ON THE BACK SIDE OF THE REMOTE CONTROL BY TWISTING THE SCREW COUNTERCLOCKWISE WITH THE PHILLIPS-HEAD SCREWDRIVER.
2. LIFT UP THE COMPARTMENT COVER.
3. PLACE 2 AAA BATTERIES AS DIRECTED BY THE +/- MARKINGS IN THE COMPARTMENT.
4. REPLACE THE COMPARTMENT COVER.
5. INSERT AND TIGHTEN THE SCREW IN THE HOLE BY TURNING IT CLOCKWISE WITH THE SCREWDRIVER.

PRIOR TO USE OF THE REMOTE CONTROL, YOU WILL NEED TO PAIR IT WITH THE VEHICLE. TO ESTABLISH THE PAIRING:

1. INSERT BATTERIES IN THE REMOTE CONTROL (SEE ABOVE)
2. PRESS AND HOLD THE M BUTTON ON THE REMOTE CONTROL UNTIL THE INDICATOR LIGHTS ON THE REMOTE CONTROL BEGIN FLASHING.
3. POWER ON THE VEHICLE (SECTION 3.3)
4. WHEN THE INDICATOR LIGHTS ON THE REMOTE CONTROL SWITCH FROM FLASHING TO SOLID ILLUMINATION, YOUR REMOTE CONTROL AND VEHICLE HAVE BEEN SUCCESSFULLY PAIRED. RELEASE THE M BUTTON ON THE REMOTE CONTROL.

TO SECURE THE REMOTE CONTROL ON THE PARENT PUSH BAR: FROM THE TOP, SLIDE THE REMOTE CONTROL INTO THE REMOTE CONTROL MOUNT.

YOU WILL NEED 2 AAA BATTERIES (NOT INCLUDED) TO OPERATE THE REMOTE CONTROL. WHEN THE REMOTE CONTROL IS BEING USED, IT GIVES PARENTAL OVERRIDE OF THE VEHICLE'S MOVEMENT.

USE THE BUTTONS ON THE REMOTE CONTROL TO:

- CHANGE TO LOW (1.5 MPH), MEDIUM (2.0 MPH), OR HIGH (3.0 MPH) SPEED.
- MOVE THE VEHICLE FORWARD OR IN REVERSE.
- TURN THE VEHICLE LEFT OR RIGHT.
- STOP THE VEHICLE.

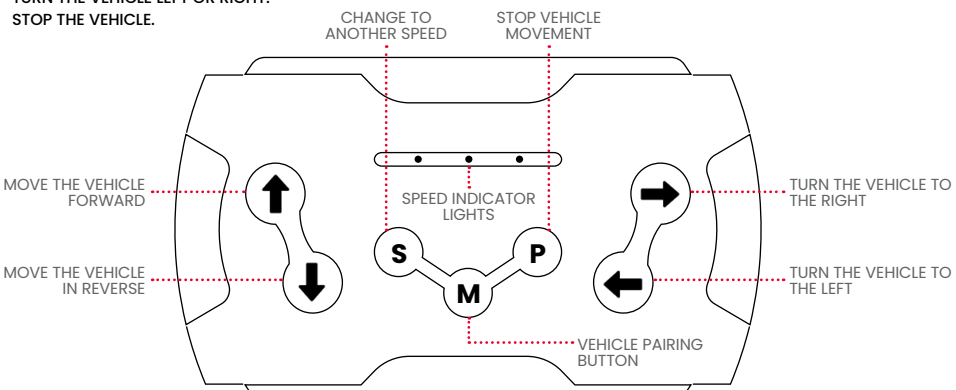

SPEED INDICATOR LIGHTS	•	• •	• • •
	LOW (1.5 MPH)	MEDIUM (2 MPH)	HIGH (3 MPH)

4.3 Using the Parent Push Bar

THE MAKO CAN BE PUSHED AND STEERED MANUALLY WITH THE POWER TURNED OFF.
TO USE THE REMOTE CONTROL EITHER IN OR OUT OF THE REMOTE CONTROL MOUNT ON THE PARENT PUSH BAR HANDLE, VEHICLE POWER MUST BE TURNED ON.

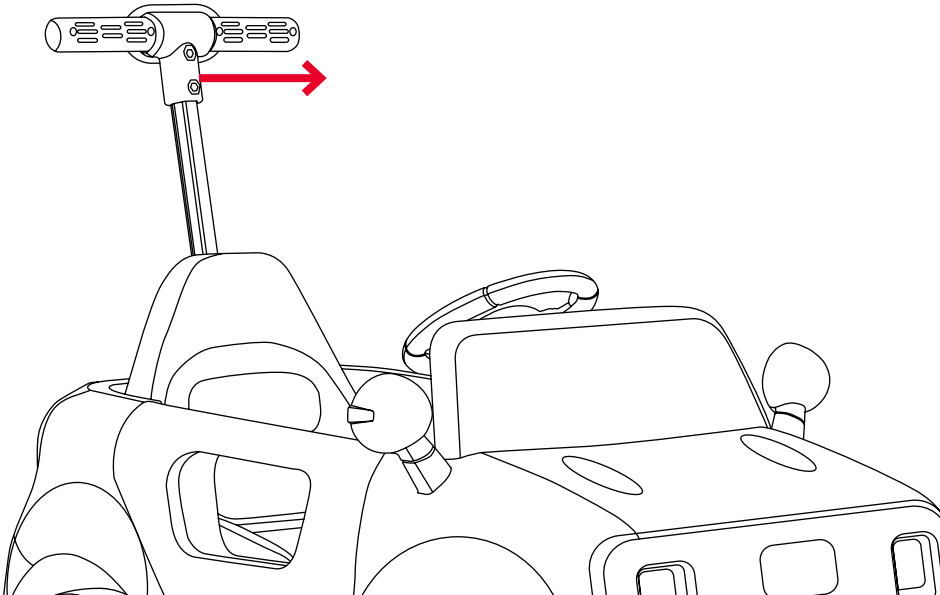

4.4 Maximizing Speed & Run Time

IN IDEAL CONDITIONS, THE MAXIMUM SPEED THAT CAN BE ACHIEVED IS 3 MILES PER HOUR (MPH) AND THE MAXIMUM RUN TIME PER BATTERY CHARGE IS 45 MINUTES.

THE HARDER THE MOTOR NEEDS TO WORK, THE FASTER YOUR BATTERY WILL DRAIN AND THE HARDER IT WILL BE TO REACH AND MAINTAIN TOP SPEEDS. THE FOLLOWING FACTORS WILL ALSO AFFECT HOW FAST YOU CAN TRAVEL AND HOW LONG CAN RIDE FROM A SINGLE CHARGE.

- **RIDING SURFACE** – TRAVELING OVER A ROUGH SURFACE CAUSES FRICTION, WHICH CAN SLOW YOU DOWN AND REQUIRES THE MOTOR TO WORK HARDER, WHICH DRAINS IT FASTER. WHEN POSSIBLE, CHOOSE A SMOOTH RIDING SURFACE.
- **CARRYING WEIGHT** – MORE CARRYING WEIGHT DECREASES ACHIEVABLE SPEED AND RUN TIME.
- **RIDING STYLE** – FREQUENT STARTING AND STOPPING WILL REDUCE RUN TIME.
- **AIR TEMPERATURE** – THE IDEAL TEMPERATURE FOR RIDING AND STORING THE MAKO IS BETWEEN 50-75°F (10-23.9°C).
- **INCLINE** – THE MOTOR HAS TO WORK HARDER WHEN YOU RIDE UPHILL, AND GOING AGAINST GRAVITY MAKES IT HARD TO HIT THE MAXIMUM ACHIEVABLE SPEED. RIDE ON FLAT SURFACES WHEN POSSIBLE.
- **BATTERY MAINTENANCE** – TIMELY BATTERY CHARGING AFTER EVERY RIDE HELPS MAINTAIN BATTERY CAPACITY AND STRENGTH.

5. Safe Journeying

5.1 Pre-Ride Safety Checks

CONDUCT THESE IMPORTANT SAFETY CHECKS BEFORE EVERY RIDE:

SEAT BELT
- CHECK THAT THE SEAT BELT IS SECURELY ATTACHED TO THE SEAT.
- ENSURE THAT THE BELT CAN BE FASTENED SECURELY WITH THE CLIPS AND ADJUSTMENT BUCKLE.

FRAME
- CHECK THAT THE FRAME IS NOT DAMAGED, BENT, OR CRACKED.

STEERING
- CHECK THAT THE HANDLEBAR AND FRONT WHEELS ROTATE IN ALIGNMENT.
- CHECK THAT THE HANDLEBAR IS SECURED IN POSITION.

WHEELS
- CHECK THAT WHEELS DO NOT SHOW SIGNS OF EXCESSIVE WEAR OR ARE DAMAGED.
- CHECK THAT THE WHEELS ROTATE FREELY.
- CHECK THAT THE WHEELS ARE CLEAR OF DEBRIS.

5.2 Helmet Safety

A HELMET SHOULD BE WORN BY THE RIDER AT ALL TIMES.



PROPER POSITIONING:
THE FOREHEAD IS COVERED
BY THE HELMET.



IMPROPER POSITIONING:
THE FOREHEAD IS EXPOSED.
A FALL COULD RESULT IN SERIOUS INJURY.

*** WEAR A HELMET, APPROPRIATE CLOTHING, SHOES, AND SAFETY GEAR. AVOID CLOTHING THAT CAN GET CAUGHT INTO OR UNDER THE WHEELS. CLOSED-TOE, FLAT SHOES ARE RECOMMENDED. WEAR AN ASTM F1492 APPROVED HELMET AND PROTECTIVE GEAR TO PREVENT INJURY IN THE EVENT OF AN ACCIDENT.**

5.3 Care & Maintenance

CLEANING THE MAKO

- TO CLEAN THE VEHICLE, CAREFULLY WIPE WITH A DAMP CLOTH AND THEN DRY WITH A DRY CLOTH. DO NOT APPLY WATER DIRECTLY TO THE PRODUCT, AS THE ELECTRICAL AND ELECTRONIC SYSTEMS MAY GET WET, WHICH COULD LEAD TO A MALFUNCTION THAT PUTS RIDER SAFETY AT RISK.
- IF THE ELECTRIC PARTS OR BATTERY GET WET, DO NOT POWER ON THE VEHICLE. CONTACT THE JETSON CARE TEAM FOR ASSISTANCE.

STORING THE MAKO

- STORE THE VEHICLE INDOORS AND IN A DRY PLACE.
- COVER THE VEHICLE TO PROTECT IT AGAINST DUST.
- FULLY CHARGE THE BATTERY BEFORE STORING FOR EXTENDED PERIODS OF TIME. ONCE IN STORAGE, CHARGE THE BATTERY ONCE A MONTH.

BATTERY CARE AND PRECAUTIONS

- KEEP AWAY FROM FIRE AND EXCESSIVE HEAT.
- TIMELY BATTERY CHARGING AFTER EVERY RIDE WILL PROLONG BATTERY LIFE.
- AVOID INTENSE PHYSICAL IMPACT AND/OR SEVERE VIBRATION.
- PROTECT FROM WATER AND MOISTURE.
- DO NOT DISASSEMBLE THE BATTERY.
- CONTACT THE JETSON CARE TEAM IF THERE ARE ANY ISSUES WITH THE BATTERY.

Stay connected.

Be sure to follow **@ridejetson**
on social media to learn about fantastic offers,
giveaways, and all the latest Jetson news.



Loving your ride?

Then be sure to leave a review at ridejetson.com/reviews.
We can't wait to hear from you!

JETSON

#MakeMoves

Questions? Let us help.

ridejetson.com/support
ridejetson.com/chat

To exercise your product's warranty
or inquire about warranty
coverage, contact us directly.

1 (844) 585-7462

Manufactured in Hebei, China
© 2024, JETSON. ALL RIGHTS RESERVED.
Manufactured by TruRide Tech LLC
PO Box 461, Jersey City, NJ 07302-9998

www.ridejetson.com





Made in China
Date Code: 05/2025
Document Edition: v4.0

© 2025, TruRide Tech. ALL RIGHTS RESERVED.
Manufactured for TruRide Tech LLC.
JETSON® is a registered trademark used under license from JetStream Brands LLC. No portion of this package, including shape, graphics, and design, may be reproduced or transmitted in any form or by any means.