A GUIDE FOR YOUR RIDE.

IMPORTANT:
Read carefully and retain for future reference.

JETSON

LIGHT RIDER JR.

Light-Up Balance Bike.

MODEL SKU(S): JLRJR-BLK, JLRJR-BLU, JLRJR-PNK

OUR TOP TWO RIDING RULES:

BE SAFE.
HAVE FUN!

MANUFACTURED IN YONGKANG, CHINA
IMPORTED BY TRURIDE TECH LLC.
PO BOX 461, JERSEY CITY, NJ 07302-9998

DATE CODE: 01/2026
DOCUMENT EDITION: V1.0
MADE IN CHINA

© 2026, TRURIDE TECH. ALL RIGHTS RESERVED. MANUFACTURED FOR TRURIDE TECH LLC.
JETSON® IS A REGISTERED TRADEMARK USED UNDER LICENSE FROM JETSTREAM BRANDS LLC.
NO PORTION OF THIS DOCUMENT, INCLUDING SHAPE, GRAPHICS, AND DESIGN, MAY BE
REPRODUCED OR TRANSMITTED IN ANY FORM OR BY ANY MEANS.

Contents

Safety Warnings 4

1. About Your Product

1.1 What's in the Box 6

1.2 Product Overview 7

1.3 Product Specs 7

1.4 Online Resources 7

2. Getting Started

2.1 Starting Notes 8

2.2 Helmet Safety 8

2.3 Assembling the Rear Wheel 9

2.4 Assembling & Attaching the Front Fork & Front Wheel . 10

2.5 Attaching the Handlebar 12

2.6 Inserting Batteries 13

2.7 Adjusting the Seat Height 14

3. Making Moves

3.1 Pre-Ride Safety Checks 15

3.2 Riding 15

3.3 Using the Lights 16

Care & Maintenance 18

Warranty Coverage & Product Registration . 19

Connect with Us 20

SAFETY WARNINGS.

KEEP THESE INSTRUCTIONS.

INSTRUCTIONS ON THE RISK OF FIRE OR INJURY TO PERSONS AND IMPORTANT SAFETY INSTRUCTIONS

- Before use, please read the user manual and safety warnings carefully, and make sure you understand and accept all the safety instructions. The user will be responsible for any loss or damage caused by improper use.
- Before each cycle of operation, the operator shall perform the preoperation checks specified by the manufacturer: That all guards and pads originally supplied by the manufacturer are in proper place and in serviceable condition; That the braking system is functioning properly; That any and all axle guards, chain guards, or other covers or guards supplied by the manufacturer are in place and in serviceable condition; That tires are in good condition, inflated properly, and have sufficient tread remaining; The area that the product is to be operated should be safe and suitable for safe operation.
- Components shall be maintained and repaired in accordance with the manufacturer's specifications and using only the manufacturer's authorized replacement parts with installation performed by dealers or other skilled persons.
- Do not mix old and new batteries.
- Do not mix alkaline, standard (carbon-zing) or rechargeable batteries.
- This product should not be used by children or persons with reduced physical, sensory or mental capabilities, or lack of experience and knowledge, unless they have been given supervision or instruction (IEC 60335-1/A2:2006).
- Unsupervised children should not play with the product (IEC 60335-1/A2:2006).
- Adult supervision is required.
- Units shall not be operated to perform racing, stunt riding, or other maneuvers, which may cause loss of control, or may cause uncontrolled operator/passenger actions or reactions.
- Never use near motor vehicles.
- Avoid sharp bumps, drainage grates, and sudden surface changes. Scooter may suddenly stop.
- Avoid streets and surfaces with water, sand, gravel, dirt, leaves, and other debris. Wet weather impairs traction, braking, and visibility.
- Avoid riding around flammable gas, steam, liquid, or dust that could cause fire.
- Operators shall adhere to all of the manufacturer's recommendations and instructions, as well as comply with all laws and ordinances: Units without headlights shall be operated only with adequate daylight conditions of visibility, and; Owners shall be encouraged to highlight (for conspicuity) using lighting, reflectors, and for low-riding units, signal flags on flexible poles.
- Persons with the following conditions shall be cautioned not to operate: Those with heart conditions; Pregnant women; Persons with head, back, or neck ailments, or prior surgeries to those areas of the body; and persons with any mental or physical conditions that may make them susceptible to injury or impair their physical dexterity or mental capabilities to recognize, understand, and perform all of the safety instructions and to be able to assume the hazards inherent in unit use.
- Do not ride at night.
- Do not ride after drinking or taking prescription medication.
- Do not carry items when riding.
- Never operate the product barefooted.
- Always wear shoes and keep shoelaces tied.
- Make sure your feet are always placed securely on the deck.
- Always give way to pedestrians.

- Be alert to things in front and far away from you.
- Operators always shall use appropriate protective clothing, including but not limited to a helmet, with appropriate certification, and any other equipment recommended by the manufacturer: Always wear protective equipment such as helmet, knee pads, and elbow pads.
- Do not allow distractions when riding, such as answering the phone or engaging in any other activities.
- The product cannot be ridden by more than one person.
- When you ride the product along with other riders, always keep a safe distance to avoid a collision.
- When turning, be sure to maintain your balance.
- Riding with improperly adjusted brakes is dangerous and can result in serious injury or death.
- The brake may become hot while operating, do not touch the brake with your bare skin.
- Applying brakes too hard or too suddenly can lock up a wheel, which could cause you to lose control and fall. Sudden or excessive application of the brake may result in injury or death.
- If the brake loosens, please adjust with a hexagon wrench, screwdriver, or other applicable tool, or please contact the Jetson Care Team.
- Replace worn or broken parts immediately.
- Check whether all safety labels are in place and understood before riding.
- The owner shall allow the use and operation of the unit after a demonstration that such operators can understand and operate all components of the unit before use.
- Do not ride without proper training. Do not ride at high speeds, on uneven terrain, or on slopes. Do not perform stunts or turn abruptly.
- Recommended for indoor use.
- Only use the battery(ies) specified by the manufacturer
- Prolonged exposure to UV rays, rain and the elements may damage the enclosure materials, store indoors when not in use.
- The rider should not exceed 66 lb (29.9 kg).

MODIFICATIONS

Do not attempt to disassemble, modify, repair, or replace the unit or any components of the unit without instruction from the Jetson Care Team. This will void any warranty, and can lead to malfunctions which may cause injury.

ADDITIONAL OPERATION PRECAUTIONS

Do not lift the product off the ground while it is on and the wheels are in motion. This can result in freely spinning wheels, which may cause injury to yourself or others nearby. Do not jump on or off the product, and do not jump while using it. Always keep your feet firmly planted on the foot rest while in operation. Always check the battery charge before using.

DISPOSAL OF USED BATTERY



Battery may contain hazardous substances which could endanger the environment and human health. This symbol marked on the battery and/or packaging indicates that used battery shall not be treated as municipal waste. Batteries should be disposed of at an appropriate collection point for recycling. By ensuring the used batteries are disposed of correctly, you will help preventing potential negative consequences for the environment and human health. The recycling of materials will help to conserve natural resources. For more information about recycling of used batteries, please contact your local municipality waste disposal service.

⚠ WARNING:

Failure to comply with the following instructions may result in injury to the child or others.

- Keep small parts away from children during assembly.
- Accessory must be assembled and removed by an adult.
- Frequently inspect the product for damage.

*** ADULT ASSEMBLY IS REQUIRED.**

⚠ WARNING:

To reduce the risk of injury, adult supervision is required. Never use in roadways, near motor vehicles, on or near steep inclines or steps, swimming pools or other bodies of water; always wear shoes, and never allow more than 1 rider.

1. ABOUT YOUR PRODUCT.

1.1 What's in the Box

Parts:

A



FRAME WITH PRE-ATTACHED HARDWARE

B



WHEEL (X2)

C



FRONT FORK WITH PRE-ATTACHED HARDWARE

D



HANDLEBAR

Tools & Additional Hardware:

E F

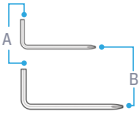

2-BIT 5MM ALLEN KEY (A) & PHILLIPS-HEAD SCREWDRIVER (B) (X2; SHORT & LONG)

G



RUBBER WASHER (X2)

H



M6 × 20MM SCREW

I



PLASTIC CAP

1.2 Product Overview

1. HANDLEBAR
2. LED LIGHTS
3. SEAT
4. SEAT CLAMP
5. REAR WHEEL
6. FRONT WHEEL
7. FRONT FORK
8. LIGHTING BUTTON
9. BATTERY COMPARTMENT

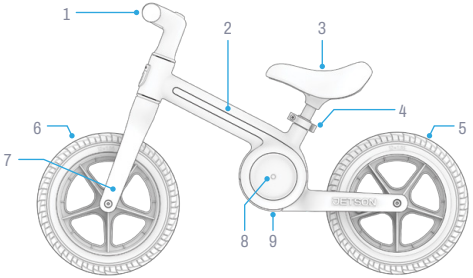

Note: Images may not reflect exact appearance of actual product.

1.3 Product Specs

- WHEEL SIZE: 12"
- PRODUCT DIMENSIONS: 33.3" (L) × 14.8" (W) × 20.7" (H)
- SEAT HEIGHT: 13.4" - 18.9"
- WEIGHT LIMIT: 66 LB
- PRODUCT WEIGHT: 7.7 LB
- RECOMMENDED AGE: 2 - 5 YEARS
- BATTERIES REQUIRED: 3AA (NOT INCLUDED)

1.4 Online Resources

Scan for our most updated product onboarding materials and support resources.

Find our collection of user manuals at https://ridejetson.com/pages/product-manuals

2. GETTING STARTED.

2.1 Starting Notes

- KICK OFF YOUR ADVENTURE RIGHT: PRIOR TO USE OF THIS PRODUCT, CAREFULLY READ THE ENTIRE USER MANUAL, INCLUDING SAFETY WARNINGS. MAKE SURE YOU UNDERSTAND, ACCEPT, AND ADHERE TO ALL:
  - MANUFACTURER'S RECOMMENDATIONS.
  - SAFETY INSTRUCTIONS AND WARNINGS.
  - LOCAL RIDING AND OPERATIONAL LAWS AND ORDINANCES.

- REMOVE ALL PROTECTIVE PACKAGING PIECES PRIOR TO BEGINNING SETUP.

- THE DIRECTIONS GIVEN IN THIS MANUAL—RIGHT, LEFT, FRONT/FORWARD, AND REAR/BACK—ARE ORIENTED AS THE RIDER WOULD SEE THEM WHEN SITTING ON THE FULLY-ASSEMBLED PRODUCT. THE "RIGHT SIDE" OF THE PRODUCT, FOR EXAMPLE, IS THE SIDE WHERE THE RIDER'S RIGHT HAND WILL BE.

2.2 Helmet Safety

A HELMET SHOULD BE WORN BY THE RIDER AT ALL TIMES.



IMPROPER POSITIONING:
THE FOREHEAD IS EXPOSED. A FALL COULD RESULT IN SERIOUS INJURY.



PROPER POSITIONING:
THE FOREHEAD IS COVERED BY THE HELMET.

*Wear a helmet, appropriate clothing, shoes, and safety gear. Avoid clothing that can get caught into or under the wheels. Closed-toe, flat shoes are recommended. Wear an ASTM F1492 approved helmet and protective gear to prevent injury in the event of an accident.

2.3 Assembling the Rear Wheel

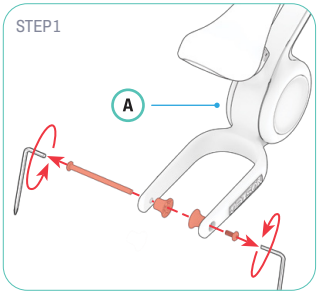

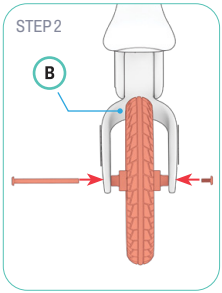

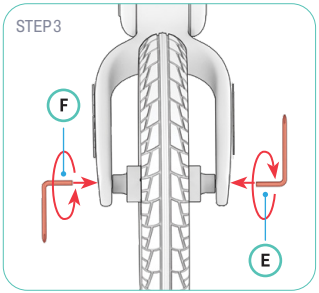

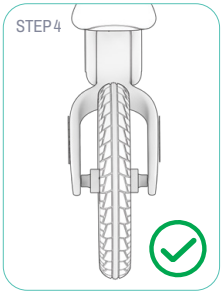



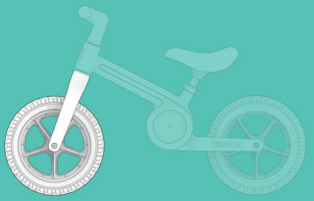

2.4 Assembling & Attaching the Front Fork & Front Wheel

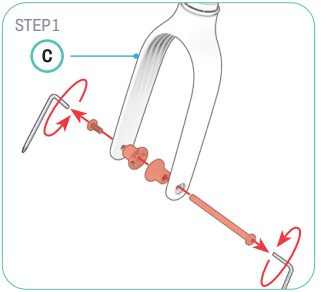

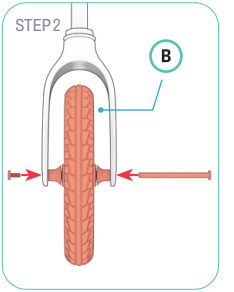

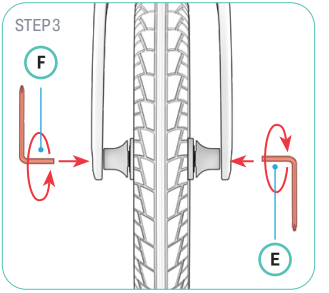

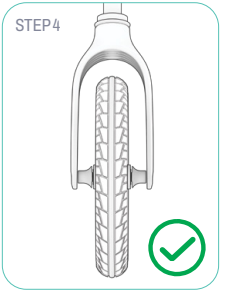

STEP 5

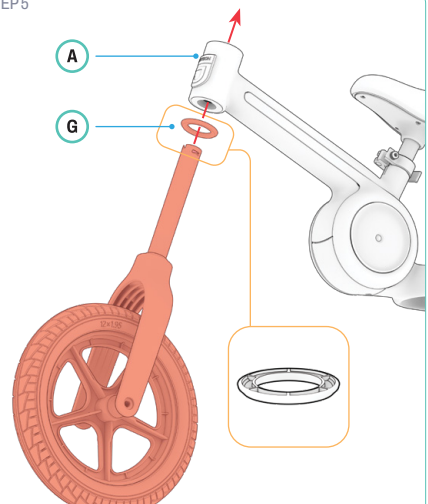

STEP 6

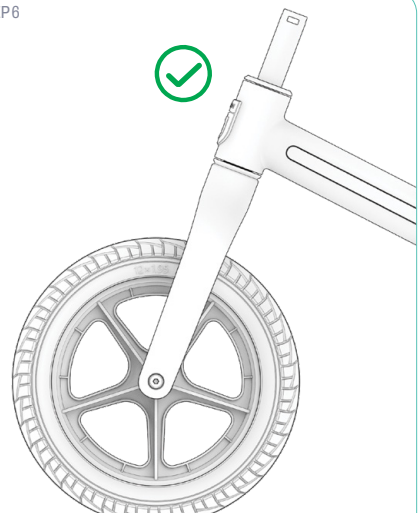

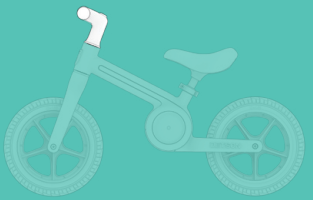

2.5 Attaching the Handlebar

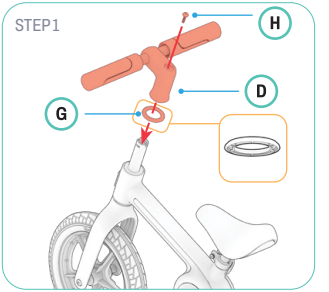

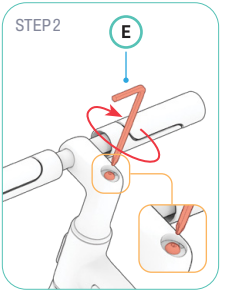

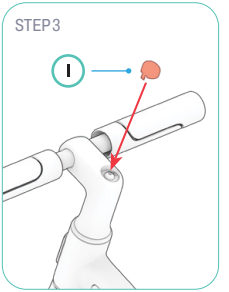

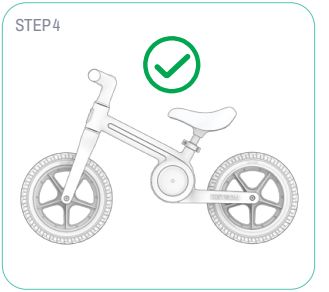

2.6 Inserting Batteries

YOU WILL NEED 3 AA BATTERIES (NOT INCLUDED) TO OPERATE THE LIGHTS.

1. POSITION THE BIKE SO THAT IT IS UPSIDE-DOWN.
2. LOOSEN AND REMOVE THE PRE-ATTACHED SCREW SECURING THE BATTERY COMPARTMENT COVER ON THE UNDERSIDE OF THE FRAME BY TURNING IT COUNTERCLOCKWISE WITH THE SCREWDRIVER TIP OF ONE OF THE 2-BIT TOOLS.
3. LIFT & REMOVE THE BATTERY COMPARTMENT COVER AND SCREW.
4. PLACE 3 AA BATTERIES IN PLACE ACCORDING TO THE +/- ORIENTATION MARKINGS ON THE INSIDE OF THE BATTERY COMPARTMENT.
5. REPLACE THE BATTERY COMPARTMENT COVER, AND INSERT THE SCREW INTO THE SET OF ALIGNED HOLES BY TWISTING IT IN CLOCKWISE.
6. TIGHTEN THE SCREW BY TURNING IT CLOCKWISE WITH THE SCREWDRIVER.
7. CHECK THAT THE BATTERY COMPARTMENT COVER AND SCREW ARE SECURE.

*UNDERSIDE OF FRAME

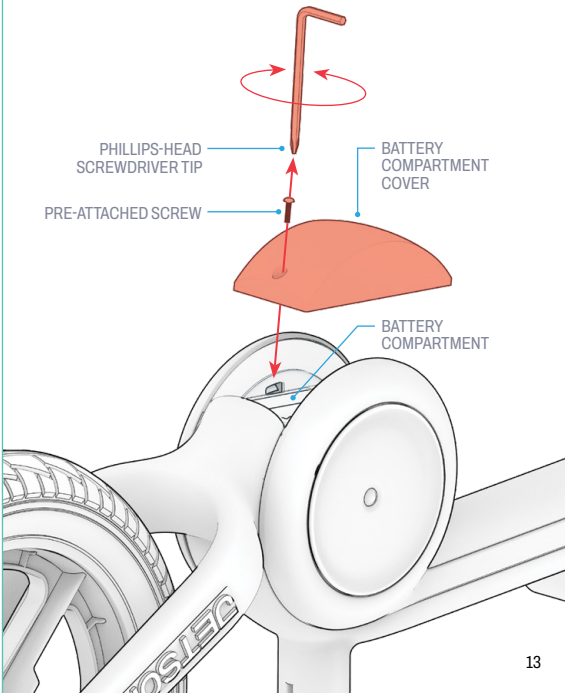

2.7 Adjusting the Seat Height

THE RIDER SHOULD BE ABLE TO REST BOTH FEET FULLY ON THE GROUND WHEN SEATED. IN THIS POSITION, THERE SHOULD BE A SLIGHT BEND IN THE KNEES. RAISE OR LOWER THE SEAT ACCORDINGLY UNTIL THIS POSITION IS ACHIEVED.

To Raise or Lower the Seat:

1. PULL OPEN THE LATCH ON THE SEAT CLAMP.
2. LOOSEN THE CLAMP KNOB BY TURNING IT COUNTERCLOCKWISE WITH THE 5MM ALLEN KEY TIP OF ONE OF THE 2-BIT TOOLS.
3. RAISE OR LOWER THE SEAT TO THE DESIRED POSITION. **IMPORTANT:** DO NOT RAISE THE SEAT SUCH THAT THE "MINIMUM INSERTION" MARK ON THE SEAT POST COMES INTO VIEW ABOVE THE CLAMP.
4. WHILE HOLDING THE SEAT IN PLACE, TIGHTEN THE CLAMP KNOB BY TURNING IT CLOCKWISE WITH THE ALLEN KEY.
5. PUSH THE CLAMP LATCH CLOSED.
6. CHECK THAT THE SEAT IS SECURE.

TROUBLESHOOTING: If you cannot open or close the clamp latch, the knob may be too tight. Loosen the knob by turning it counterclockwise for ½ rotation at a time until the latch can be utilized.

⚠ **WARNING:**

- To avoid a collapsing of the seat that could lead to injury, never ride without the clamp latch closed and the clamp tight around the seat stem.
- To ensure the seat is secure in the frame, never ride with the "minimum insertion" mark on the seat post visible above the seat clamp.

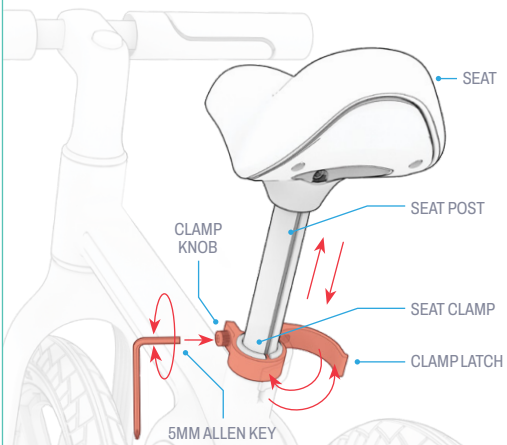

3. MAKING MOVES.

3.1 Pre-Ride Safety Checks

CONDUCT THESE IMPORTANT SAFETY CHECKS BEFORE EVERY JOURNEY:

Steering

- CHECK THAT THE HANDLEBAR IS SECURELY TIGHTENED TO THE FRAME.
- CHECK THAT THE HANDLEBAR AND FRONT WHEEL ROTATE IN ALIGNMENT.

Wheels & Tires

- CHECK THAT THE WHEELS ROTATE FREELY.
- CHECK WHEELS FOR EXCESSIVE WEAR OR ANY DAMAGE.
- CHECK THAT THE WHEELS ARE SECURED TO THE FRAME.

Seat

- CHECK THAT THE SEAT IS SECURE AND INSERTED PAST THE "MINIMUM INSERTION" MARK ON THE SEAT POST.

3.2 Riding

MOVING: WHILE SEATED, PUSH BOTH FEET OFF THE GROUND TO PROPEL FORWARD. TO COAST, KEEP BOTH FEET LIFTED.

TURNING: WHILE MOVING FORWARD, ROTATE THE HANDLEBAR TO THE LEFT OR RIGHT.

STOPPING: PLACE BOTH FEET ON THE GROUND.

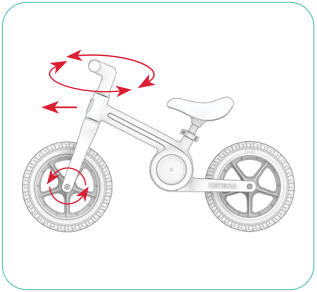

3.3 Using the Lights

YOU CAN LIGHT UP YOUR RIDE WITH 4 DIFFERENT LIGHTING PATTERNS AND IN 8 DIFFERENT COLORS (INCLUDING "MULTI").

TO TURN THE LIGHTS ON OR OFF: PRESS AND HOLD THE LIGHTING POWER BUTTON FOR 2 SECONDS.

TO CHANGE TO ANOTHER LIGHTING PATTERN: QUICK-PRESS THE LIGHTING BUTTON.

TO CHANGE TO ANOTHER LIGHT COLOR WITHIN THE PATTERN THAT YOU HAVE SET: QUICK-PRESS THE LIGHTING BUTTON 2 TIMES IN A ROW.

IMPORTANT: ALWAYS REMEMBER TO TURN YOUR LIGHTS OFF AFTER A RIDE.

INTELLIGENT AUTO-OFF FEATURE: TO PRESERVE BATTERY POWER, THE LIGHTS WILL AUTOMATICALLY TURN OFF 10 MINUTES AFTER THEY HAVE BEEN POWERED ON. TO TURN THE LIGHTS BACK ON AND RESET THEM TO YOUR DESIRED PATTERN AND COLOR, FOLLOW THE INSTRUCTIONS ABOVE.

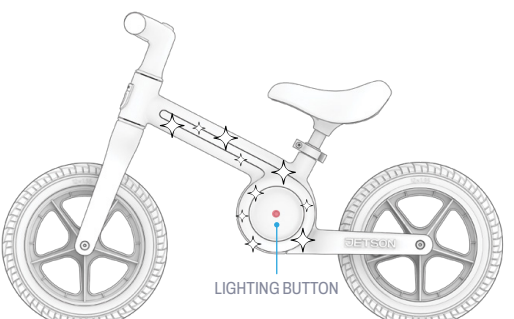

CARE & MAINTENANCE.

Take good care of your Jetson to keep it riding smoothly and safely. Here's how:

Cleaning Your Jetson:

- TO CLEAN THE PRODUCT, CAREFULLY WIPE WITH A DAMP CLOTH AND THEN DRY WITH A DRY CLOTH.
- DO NOT APPLY WATER DIRECTLY TO THE PRODUCT. WATER CAN CAUSE DAMAGE TO THE ELECTRICAL SYSTEM OR CAUSE FRAME DETERIORATION, WHICH COULD LEAD TO A MALFUNCTION THAT PUTS RIDER SAFETY AT RISK.

Storing Your Jetson:

- STORE THE PRODUCT INDOORS AND IN A DRY PLACE.
- COVER THE PRODUCT TO PROTECT IT AGAINST DUST.

Precautions:

- KEEP AWAY FROM FIRE AND EXCESSIVE HEAT.
- AVOID INTENSE PHYSICAL IMPACT AND/OR SEVERE VIBRATION.
- RIDE THE PRODUCT ON A SMOOTH, FLAT SURFACE.
- PROTECT FROM WATER OR MOISTURE.
- CONTACT THE JETSON CARE TEAM IF THERE ARE ANY ISSUES WITH THE PRODUCT.

WARRANTY COVERAGE & PRODUCT REGISTRATION.

GENERAL LIMITED WARRANTY

YOUR NEW JETSON PRODUCT IS WARRANTED AGAINST DEFECTS IN MATERIALS AND WORKMANSHIP AS INDICATED ON RIDEJETSON.COM/WARRANTY FOR A PERIOD OF TIME FROM THE DATE OF ORIGINAL RETAIL PURCHASE WHEN USED IN ACCORDANCE WITH JETSON'S USER MANUALS (REFER TO RIDEJETSON.COM/SUPPORT). **UNDER THIS WARRANTY, YOU WILL BE ABLE TO DIRECT YOUR CLAIMS TO JETSON EVEN IN SITUATIONS WHERE YOU PURCHASED THE JETSON PRODUCT FROM ONE OF OUR AUTHORIZED RETAILERS.** TO READ THE FULL TERMS OF OUR WARRANTY, VISIT RIDEJETSON.COM/WARRANTY.

PRODUCT REGISTRATION

REGISTER YOUR NEW JETSON TO FAST-TRACK YOU TOWARDS PERSONALIZED PRODUCT AND WARRANTY SUPPORT. MAKE YOUR MOVE AT RIDEJETSON.COM/PAGES/REGISTRATION.

CONNECT WITH US.

RIDEJETSON.COM/SUPPORT
RIDEJETSON.COM/CHAT

1-844-585-7462

Be sure to follow @ridejetson on social media to learn about fantastic offers, giveaways, and all the latest Jetson news.

LOVING YOUR RIDE?

Leave a review at
ridejetson.com/reviews.
We can't wait to hear from you!
#MakeMoves


JETSON