JETSON

Light Rider 20 (JLR-X)

Kids Light-Up Bicycle.

A guide for your ride.

IMPORTANT: READ CAREFULLY AND RETAIN FOR FUTURE REFERENCE.

MODEL SKUS: JLRX20-BLU | JLRX20-PNK | JLRX20-BOR | JLRX20-BNG
JLRX20-BGR | JLRX20-BBL | JLRX20-BPK | JLRX20-BBL-BB
JLRX20-BPK-BB | JLRX20-OBL | JLRX20-NAV | JLRX20-PGL
JLRX20-MPK

U.S. Patent No. 11,155,315

Jetson's top two riding rules:
Be safe. Have fun!

Contents

Safety Warnings 4

Warranty Coverage 6

Product Overview 8

Specs & Features 10

Rider Suitability 10

Online Resources 11

1. Getting Started

Starting Notes 13

Attaching the Front Wheel 14

Installing the Handlebar 18

Securing the Handbrakes 21

Assembling the Front Brake 22

Adjusting the Rear Brake 29

Attaching the Seat 30

Attaching the Pedals 33

Inflating the Tires 35

Inserting & Changing the Batteries 38

Pre-Ride Safety Checks 41

2. Features & Functions

Using the Bell 44

Using the Lights 45

Using the Kickstand 47

3. Making Moves

Riding Your Jetson Light Rider 48

Using the Brakes 49

Helmet Safety 50

Care & Maintenance 51

Safety Warnings

- Before use, please read the user manual and safety warnings carefully, and make sure you understand and accept all the safety instructions. The user will be responsible for any loss or damage caused by improper use.
- Before each cycle of operation, the operator shall perform the preoperation checks specified by the manufacturer: That all guards and pads originally supplied by the manufacturer are in proper place and in serviceable condition; That the braking system is functioning properly; That any and all axle guards, chain guards, or other covers or guards supplied by the manufacturer are in place and in serviceable condition; That tires are in good condition, inflated properly, and have sufficient tread remaining; The area that the product is to be operated should be safe and suitable for safe operation.
- Components shall be maintained and repaired in accordance with the manufacturer's specifications and using only the manufacturer's authorized replacement parts with installation performed by dealers or other skilled persons.
- Don't allow hands, feet, hair, body parts, clothing, or similar articles to come in contact with moving parts, wheels, or drive train, while the bike is in use.
- This product should not be used by children or persons with reduced physical, sensory or mental capabilities, or lack of experience and knowledge, unless they have been given supervision or instruction (IEC 60335-1/A2:2006).
- Unsupervised children should not play with the product (IEC 60335-1/A2:2006).
- Adult supervision is required.
- The rider should not exceed 150 lb.
- Do not mix old and new batteries.
- Never use near motor vehicle.
- Units shall not be operated to perform racing, stunt riding, or other maneuvers, which may cause loss of control, or may cause uncontrolled operator/passenger actions or reactions.
- Avoid sharp bumps, drainage grates, and sudden surface changes. Bike may suddenly stop.
- Avoid streets and surfaces with water, sand, gravel, dirt, leaves, and other debris. Wet weather impairs traction, braking and visibility.
- Avoid riding around flammable gas, steam, liquid, or dust that could cause fire.
- Operators shall adhere to all of the manufacturer's recommendations and instructions, as well as comply with all laws and ordinances: Units without headlights shall be operated only with adequate daylight conditions of visibility, and; Owners shall be encouraged to highlight (for conspicuity) using lighting, reflectors, and for low-riding units, signal flags on flexible poles.
- Do not ride at night.
- Only ride the product with adequate daylight conditions for visibility.
- Persons with the following conditions shall be cautioned not to operate: Those with heart conditions; Pregnant women; Persons with head, back, or neck ailments, or prior surgeries to those areas of the body; and persons with any mental or physical conditions that may make them susceptible to injury or impair their physical dexterity or mental capabilities to recognize, understand, and perform all of the safety instructions and to be able to assume the hazards inherent in unit use.
- Do not ride after drinking or taking prescription medication.
- Do not carry items when riding.
- Never operate the product barefooted.

- Always wear shoes and keep shoelaces tied.
- Make sure your feet are always placed securely on the pedals.
- Operators always shall use appropriate protective clothing, including but not limited to a helmet, with appropriate certification, and any other equipment recommended by the manufacturer: Always wear protective equipment such as helmet, knee pads, and elbow pads.
- Always give way to pedestrians.
- Be alert to things in front and far away from you.
- Do not allow distractions when riding, such as answering the phone or engaging in any other activities.
- The product cannot be ridden by more than one person.
- When you ride the product along with other riders, always keep a safe distance to avoid a collision.
- When turning, be sure to maintain your balance.
- Riding with improperly adjusted brakes is dangerous and can result in serious injury or death.
- Applying brakes too hard or too suddenly can lock up a wheel, which could cause you to lose control and fall. Sudden or excessive application of the brake may result in injury or death.
- If the brake loosens, please adjust with the hexagon wrench, or please contact the Jetson Care Team.
- Replace worn or broken parts immediately.
- The area that the product is to be operated should be safe and suitable for safe operation.
- Check whether all safety labels are in place and understood before riding.
- The owner shall allow the use and operation of the unit after a demonstration that such operators can understand and operate all components of the unit before use.
- Use caution when changing the batteries. Do not change batteries near flammable materials. Remove batteries from the bike when not in use for long periods of time.
- Prolonged exposure to UV rays, rain and the elements may damage the enclosure materials, store indoors when not in use.

MODIFICATIONS

Do not attempt to disassemble, modify, repair, or replace the product or any components of the unit without instruction from the Jetson Care Team. This will void any warranty, and can lead to malfunctions which may cause injury.

ADDITIONAL OPERATION PRECAUTIONS

- Do not lift the product off the ground while it is on and the wheels are in motion. This can result in freely spinning wheels, which may cause injury to yourself or others nearby.
- Do not jump on or off the product, and do not jump while using it.
- Always keep your feet firmly planted on the pedals while in operation.
- The Consumer Product Safety Commission advises that the riding of small wheel diameter bicycles at excessive speeds can lead to instability and is not recommended.
- Always wear a properly fitted helmet when you ride your bicycle. Do not ride at night. Avoid riding in wet conditions.

MAINTENANCE PRECAUTIONS

For all maintenance repairs and needs beyond the capability of the consumer which may include but not limited to such as proper maintenance of brakes, control cables, bearing adjustments, wheel adjustments, lubrication, reflectors, tires and handlebar and seat adjustments, please contact the Jetson Care Team for assistance at:

ridejetson.com/support
US & Canada 1-(888) 976-9904

DISPOSAL OF USED BATTERY



Battery may contain hazardous substances which could endanger the environment and human health. This symbol marked on the battery and/or packaging indicates that used battery shall not be treated as municipal waste. Batteries should be disposed of at an appropriate collection point for recycling. By ensuring the used batteries are disposed of correctly, you will help preventing potential negative consequences for the environment and human health. The recycling of materials will help to conserve natural resources. For more information about recycling of used batteries, please contact your local municipality waste disposal service.

California Proposition 65

⚠WARNING:

This product can expose you to chemicals including Chromium (hexavalent compounds), which is known to the State of California to cause cancer and birth defects or other reproductive harm. For more information go to: www.P65Warnings.ca.gov.

Warranty Coverage

ONE-YEAR GENERAL LIMITED WARRANTY

Your new Jetson product is warranted against defects in materials and workmanship for a period of one year from the date of original retail purchase when used in accordance with Jetson's user manuals (refer to ridejetson.com/support). **Under this warranty, you will be able to direct your claims to Jetson even in situations where you purchased the Jetson Product from one of our authorized retailers.** To read the full terms of our warranty, visit ridejetson.com/warranty.

Product Overview

1. **BIKE FRAME**
2. **FRONT WHEEL***
3. **HANDLEBAR***
4. **BELL**
5. **SEAT***
6. **PEDALS WITH REFLECTORS** (X2; LEFT AND RIGHT)*
7. **TIRE VALVES WITH DUST CAPS**
8. **TIRE VALVE LIGHTS** (X4; SOME MODELS)*
9. **CHAIN**
10. **CHAIN GUARD**
11. **LED LIGHTS**
12. **LIGHTING POWER & CONTROL BUTTONS**
13. **REAR WHEEL**
14. **SEAT POST**
15. **SEAT CLAMP**
16. **HANDBRAKE** (X2; LEFT AND RIGHT)
17. **FRONT FORK**
18. **KICKSTAND**
19. **REAR REFLECTOR**
20. **FRONT REFLECTOR**
21. **BRAKE CALIPER** (X2; FRONT AND REAR)
22. **WHEEL REFLECTOR** (X2; FRONT AND REAR)

* NOT PRE-ATTACHED; REQUIRES ASSEMBLY.

TOOLS INCLUDED:



8MM AND 10MM DOUBLE-SIDED WRENCH

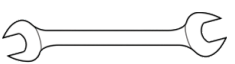

13MM AND 15MM DOUBLE-SIDED WRENCH



5MM ALLEN KEY

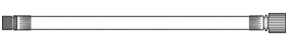

TIRE VALVE STEM EXTENSION HOSE
(SOME MODELS)

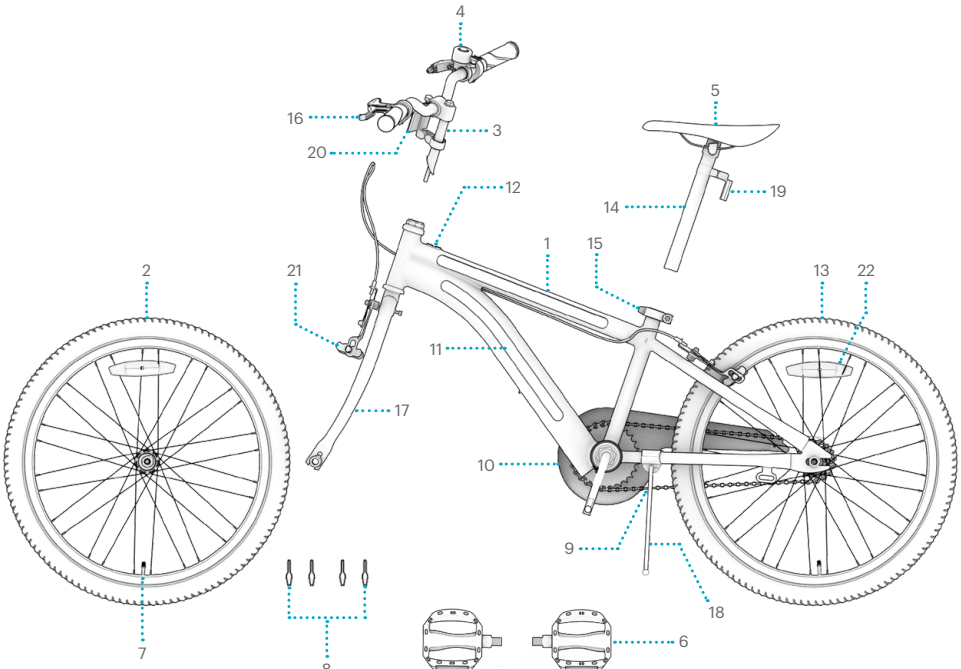

NOTE: IMAGES MAY NOT REFLECT EXACT APPEARANCE OF ACTUAL PRODUCT.

Specs & Features

- **PRODUCT DIMENSIONS: 54.0" (L) X 23.0" (W) X 32.0" (H)**
- **HANDLEBAR HEIGHT: 30.5" - 32.7"**
- **SEAT HEIGHT: 24.2" - 28.9"**
- **PRODUCT WEIGHT: 25.5 LB**
- **TIRE SIZE: 20"**
- **BRAKES: FRONT AND REAR WHEEL RIM CALIPER BRAKES WITH HANDBRAKE CONTROL**
- **WEIGHT LIMIT: 150 LB**
- **RECOMMENDED RIDER AGE: 5 - 9 YEARS**
- **RECOMMENDED TIRE PRESSURE: 43 PSI**
- **FRAME LIGHT BATTERIES REQUIRED: 3 AA** (NOT INCLUDED)
- **TIRE VALVE LIGHT BATTERIES REQUIRED** (SOME MODELS)**: 3 AG10 1.5V PER LIGHT** (INCLUDED)

Rider Suitability

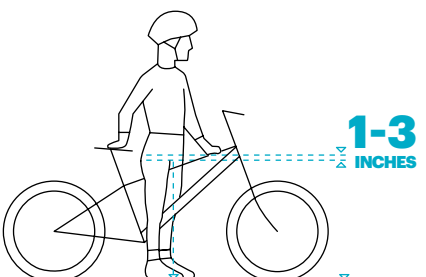

FOR SAFE AND COMFORTABLE RIDING, THERE SHOULD BE A CLEARANCE OF AT LEAST 1-3 INCHES BETWEEN THE CROTCH AND THE TOP TUBE OF THE BICYCLE FRAME WHEN THE RIDER STRADDLES THE BICYCLE WITH BOTH FEET FLAT ON THE GROUND.

Online Resources

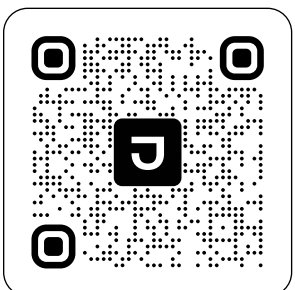

Scan for our most updated Jetson Light Rider 20 onboarding materials and support resources.

⚠WARNING:

FAILURE TO COMPLY WITH THE FOLLOWING INSTRUCTIONS MAY RESULT IN INJURY TO THE CHILD OR OTHERS.

- KEEP SMALL PARTS AWAY FROM CHILDREN DURING ASSEMBLY.
- ACCESSORY MUST BE ASSEMBLED AND REMOVED BY AN ADULT.
- FREQUENTLY INSPECT THE PRODUCT FOR DAMAGE.

* ADULTS MUST ASSIST CHILDREN IN THE ASSEMBLY AND INITIAL ADJUSTMENT PROCEDURES OF THE PRODUCT.

1. Getting Started

1.1 Starting Notes

- REMOVE ALL PACKAGING PIECES BEFORE BEGINNING ASSEMBLY: AT THE BASE OF THE FRONT FORK AND HANDLEBAR STEM, ON THE SEAT CLAMP AND WHEEL AXLES, ETC.

- OUR JETSON LIGHT RIDER 20 BIKES HAVE EVOLVED OVER THE YEARS, AND THIS USER MANUAL APPLIES TO ALL VERSIONS. CERTAIN NOTES AND INSTRUCTIONS ARE ONLY APPLICABLE TO SOME VERSIONS AND ARE INDICATED AS SUCH.

- THE DIRECTIONS GIVEN IN THIS MANUAL—RIGHT, LEFT, FRONT/FORWARD, AND REAR/BACK—ARE ORIENTED AS THE RIDER WOULD SEE THEM WHEN SEATED ON THE BIKE. THE "RIGHT SIDE" OF THE BIKE, FOR EXAMPLE, IS THE SIDE WHERE THE RIDER'S RIGHT HAND AND FOOT WILL BE.

- IT IS HELPFUL TO HAVE AN EXTRA SET OF HANDS TO HELP WITH ASSEMBLY. GRAB AN ASSISTANT!

- IF YOU HAVE PURCHASED YOUR BIKE PRE-ASSEMBLED, CHECK ALL PARTS OUTLINED IN SECTION 1 ("GETTING STARTED") TO SEE THAT THEY HAVE BEEN ASSEMBLED AND SET UP PROPERLY. MAKE ANY NECESSARY ADJUSTMENTS PRIOR TO RIDING AND CONDUCT ALL PRE-RIDE SAFETY CHECKS.
  SCAN HERE TO FAST-TRACK TO OUR QUICK START GUIDE FOR PRE-ASSEMBLED BIKES:

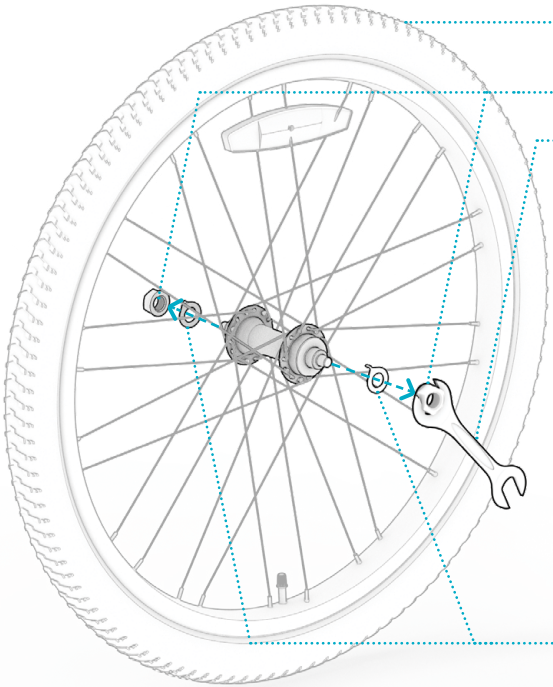

1.2 Attaching the Front Wheel

YOU WILL NEED THE 15MM WRENCH.

1. **LOOSEN AND REMOVE THE AXLE NUTS FROM BOTH SIDES OF THE FRONT WHEEL BY TURNING EACH COUNTERCLOCKWISE WITH YOUR FINGERS OR THE 15MM WRENCH.**
2. **REMOVE THE WASHERS FROM BOTH SIDES OF THE AXLE AND SET THEM ASIDE WITH THE AXLE NUTS.**
3. **LOCATE THE ARROW ON THE FRONT TIRE INDICATING THE DIRECTION OF PROPER ROTATION FOR THE TIRE.**

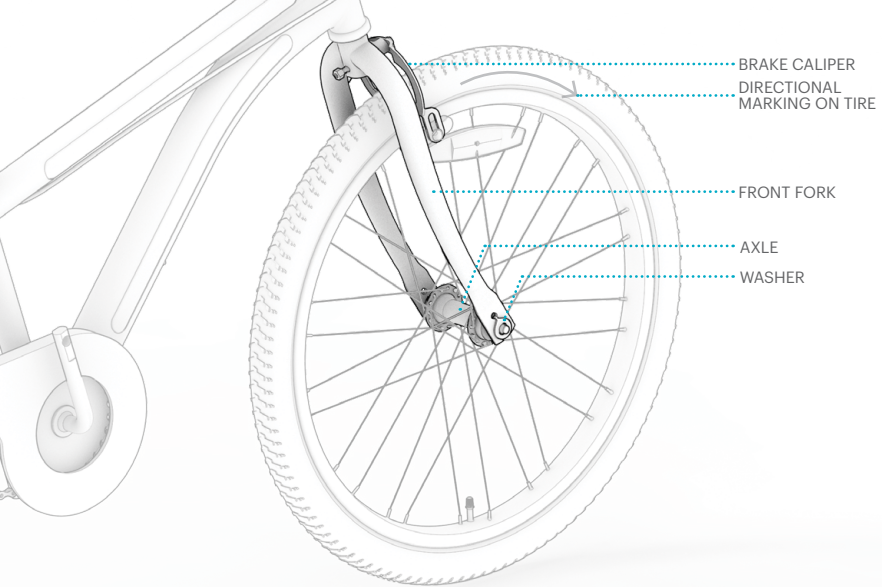

4. **LIFT THE BIKE UPRIGHT AND ROTATE THE FRONT FORK SO THAT ONE FORK LEG IS ON THE LEFT SIDE AND ONE FORK LEG IS ON THE RIGHT SIDE OF THE BIKE.**
5. **PROP THE BIKE UPRIGHT SO THAT IT IS RESTING ON THE REAR WHEEL AND FRONT FORK.**
6. **ROTATE THE BRAKE CALIPER SO THAT IT IS ALIGNED WITH THE FRONT FORK.**
7. **PLACE THE WHEEL SUCH THAT THE FOLLOWING CONDITIONS ARE MET:**
   - **THE TOP OF THE FRONT WHEEL IS IN BETWEEN THE FRONT FORK LEGS AND THE CALIPER ARMS**
   - **THE ROTATION ARROW ON THE TIRE IS IN BETWEEN THE CALIPER AND POINTED FORWARD**
   - **BOTH SIDES OF THE WHEEL AXLE FIT INTO THE WEDGES OF THE FRONT FORK LEGS.**

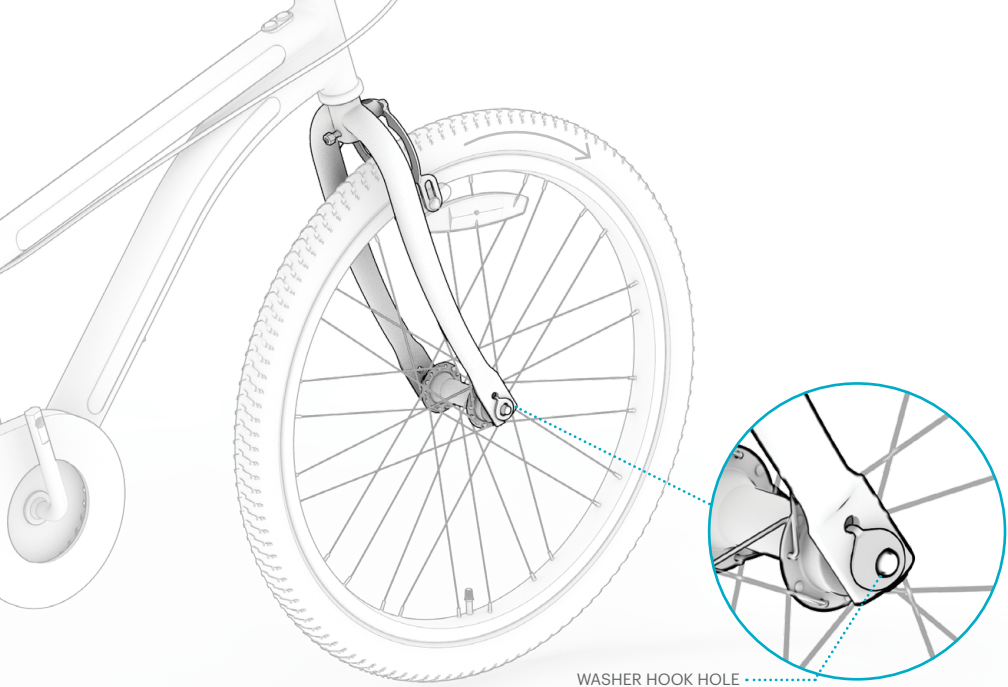

8. **PLACE ONE OF THE REMOVED WASHERS ONTO EACH END OF THE AXLE WITH THE HOOK CURVED INWARD AND ALIGNED WITH THE WASHER HOOK HOLE IN THE FORK LEG. PUSH THE HOOK INTO THE HOLE.**

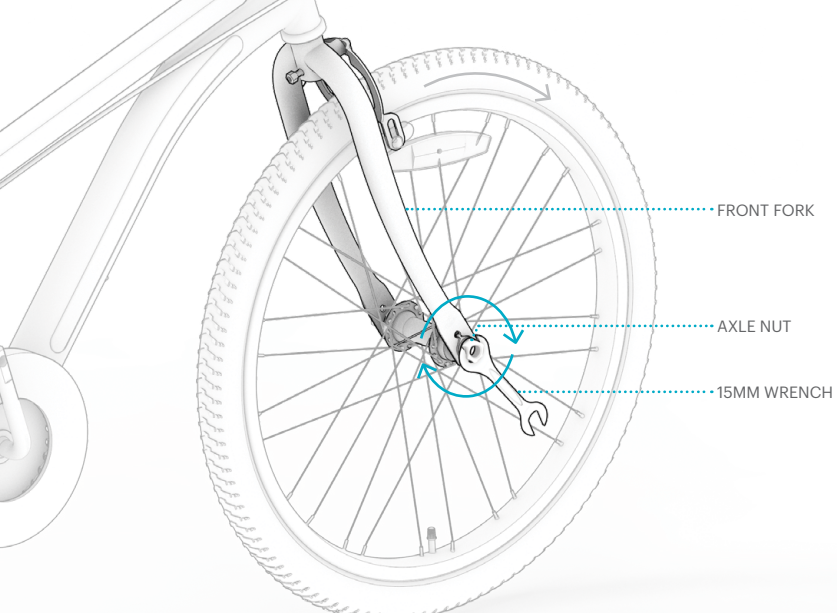

9. FINGER-TWIST AN AXLE NUT CLOCKWISE ONTO EACH SIDE OF THE AXLE.
10. TIGHTEN THE AXLE NUTS WITH THE 15MM WRENCH.
11. CHECK THAT THE WHEEL IS SECURE AND SPINS FREELY IN THE FORK.

IMPORTANT: AN UNSECURED WHEEL CAN LOOSEN OR FALL OFF, PUTTING THE RIDER AT RISK OF SERIOUS INJURY. ENSURE THAT THE AXLE IS SECURE IN THE FORK AND THAT THE AXLE NUTS ARE TIGHT.

1.3 Installing the Handlebar

YOU WILL NEED THE 13MM WRENCH.

1. LOOSEN THE CAP BOLT ON THE TOP OF THE HANDLEBAR BY TURNING IT COUNTERCLOCKWISE FOR 1-2 ROTATIONS WITH THE 13MM WRENCH.
2. POSITION THE HANDLEBAR ABOVE THE HEAD TUBE WITH THE HANDLEBAR POST IN LINE WITH THE STEM AND THE BELL ON THE RIGHT SIDE OF THE BIKE.
3. SQUEEZING AND MANIPULATING THE WEDGE NUT SO THAT IT FITS INTO THE HEAD TUBE, SLIDE THE HANDLEBAR POST ALL THE WAY INTO THE HEAD TUBE.
   NOTE: IF THE WEDGE NUT DOES NOT FIT INSIDE THE HOLE OF THE HEAD TUBE, YOU MAY NEED TO LOOSEN THE CAP BOLT FURTHER.

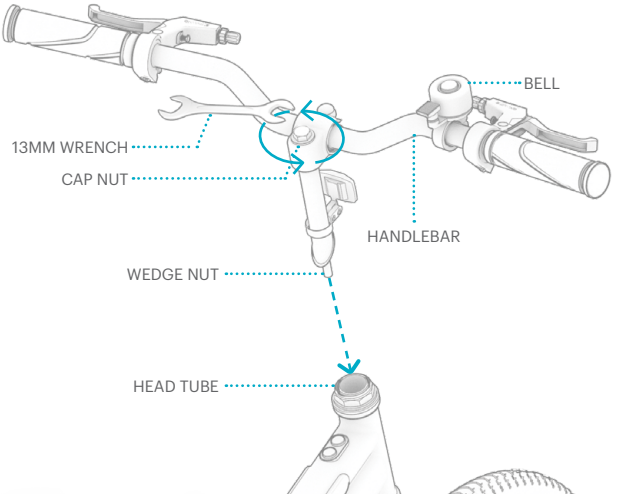

4. **CHECK THAT THE HANDLEBAR AND FRONT FORK ARE ALIGNED, SUCH THAT WHEN THE WHEEL IS POINTED FORWARD AND THE HANDLEBAR IS STRAIGHT ACROSS THE BIKE. IF NECESSARY, MAKE ROTATIONAL ADJUSTMENTS ON EITHER THE HANDLEBAR OR THE FORK UNTIL BOTH PIECES ARE STRAIGHT AND ALIGNED.**
5. **POSITION AND HOLD THE HANDLEBAR AT THE DESIRED HEIGHT.**
   IMPORTANT: **NEVER RAISE THE HANDLEBAR SUCH THAT THE WEDGE NUT IS VISIBLE ABOVE THE HEAD TUBE.**

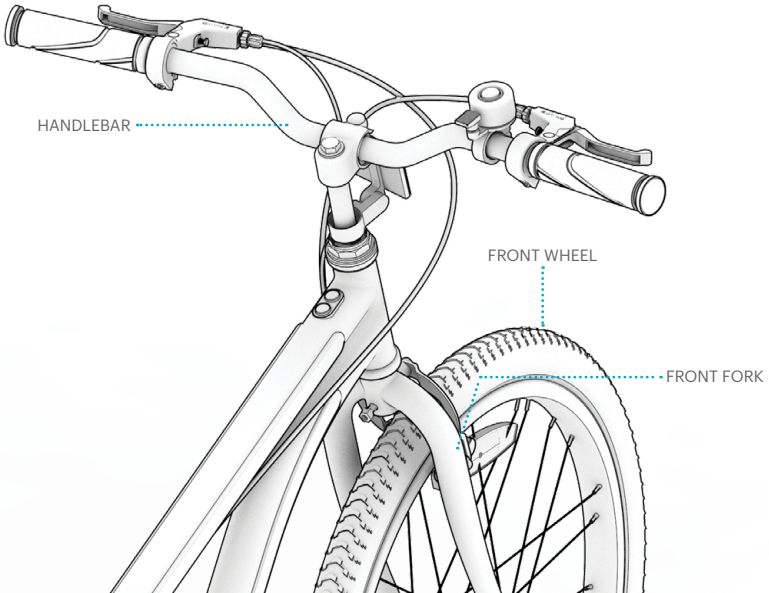

6. **TIGHTEN THE CAP NUT BY TURNING IT CLOCKWISE WITH THE WRENCH.**
7. **CHECK THAT THE HANDLEBAR IS SECURE AND THAT THE FRONT WHEEL TURNS LEFT OR RIGHT IN ACCORDANCE WITH THE ROTATION OF THE HANDLEBAR.**

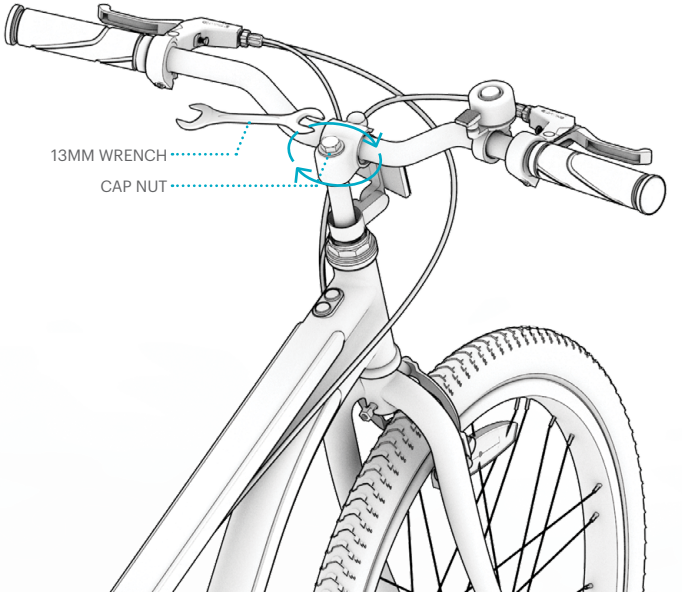

1.4 Securing the Handbrakes

1. **ROTATE THE HANDBRAKES AROUND THE HANDLEBAR UNTIL THEY ARE AT THE DESIRED HEIGHT.**
2. **WHILE HOLDING EACH HANDBRAKE IN POSITION, TIGHTEN THE BOLT ON THE HANDBRAKE CLAMP BY TURNING IT CLOCKWISE WITH THE ALLEN KEY.**

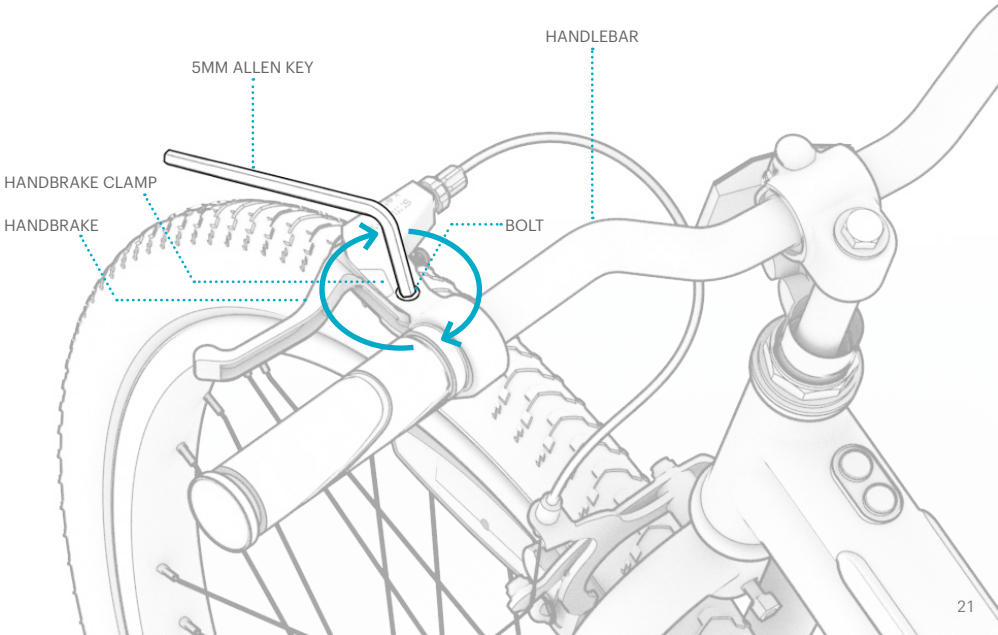

1.5 Assembling the Front Brake

NOTE: YOU MAY NEED ANOTHER SET OF HANDS TO GET THE FRONT BRAKE CONNECTED. (GRAB AN ASSISTANT!)

1. **LOOSEN BUT DO NOT REMOVE THE CABLE ANCHOR NUT ON THE FRONT BRAKE CALIPER BY TURNING IT COUNTERCLOCKWISE WITH THE 10 MM WRENCH.**
2. **POSITION THE CALIPER OVER THE WHEEL SUCH THAT THE TOP OF THE CALIPER IS CENTERED OVER THE WHEEL, AND THE BRAKE PADS ARE:**
   - **PARALLEL WITH ONE ANOTHER.**
   - **ALIGNED WITH THE TIRE RIM.**
   - **EVENLY SPACED FROM THE TIRE RIM.**

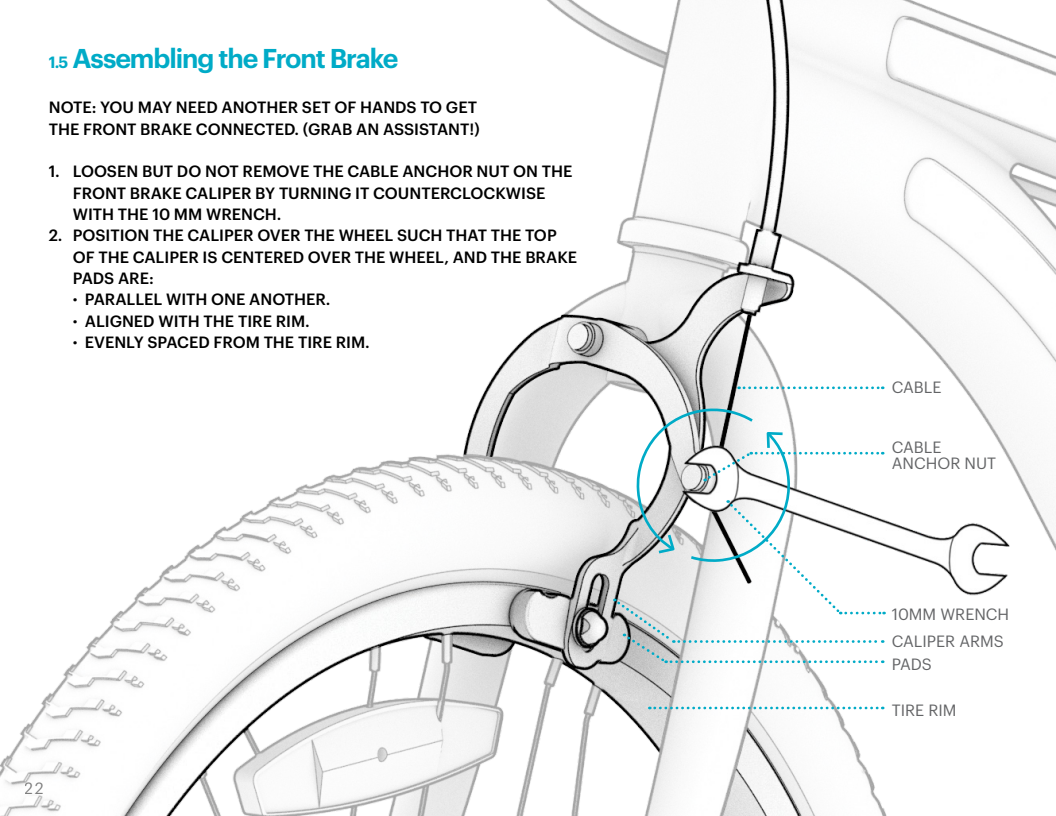

3. **SQUEEZE THE CALIPER CLOSED WITH ONE HAND SO THAT THE BRAKE PADS ARE HUGGING THE TIRE RIM AND, WITH THE OTHER HAND, PULL THE SLACK OUT OF THE BRAKE CABLE UNTIL THE CABLE IS TAUT. (SEE PAGE 42 FOR MORE DETAILS ON PROPER BRAKE PAD ALIGNMENT.)**

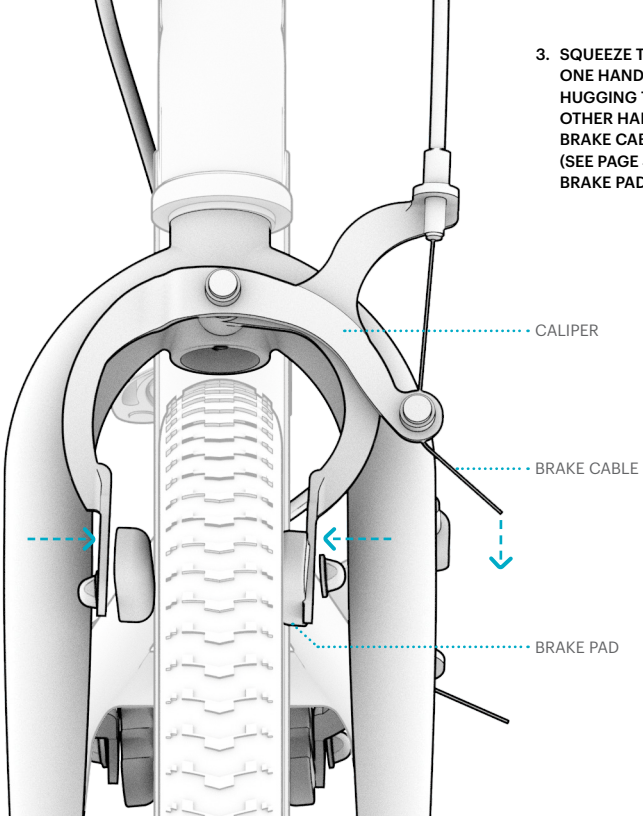

4. **WITH THE BRAKE CABLE TAUT AND THE CALIPER STILL HELD CLOSED, TIGHTEN THE CABLE ANCHOR NUT BY TURNING IT CLOCKWISE WITH THE 10MM WRENCH.**

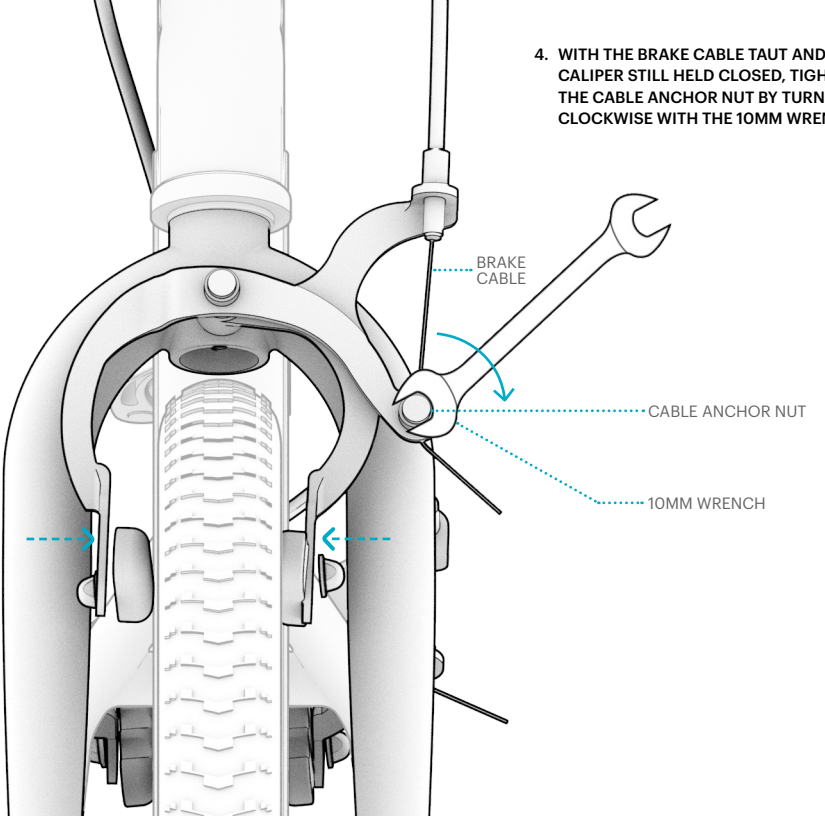

5. **CHECK THAT THE FRONT WHEEL BRAKE CABLE IS CONNECTED TO THE HANDBRAKE AND TO THE CABLE ADJUSTMENT BARREL.**
6. **PULL AND RELEASE THE FRONT BRAKE HANDBRAKE (ON THE LEFT SIDE OF THE HANDLEBAR) SEVERAL TIMES TO ENSURE THAT THE BRAKE CALIPER IS OPENING AND CLOSING SMOOTHLY AND THAT THE BRAKE PADS ARE CLOSING SUCH THAT THEY ARE ALIGNED WITH THE WHEEL RIM.**

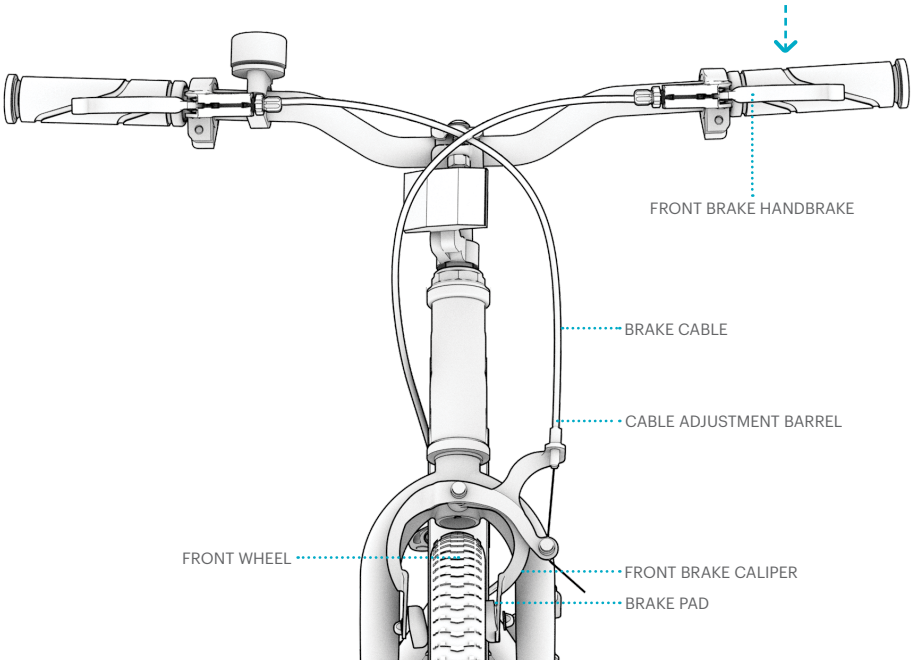

7. **TIGHTEN THE BOLT ON THE BACK OF THE FRONT FORK BY TURNING CLOCKWISE WITH THE 10MM WRENCH**

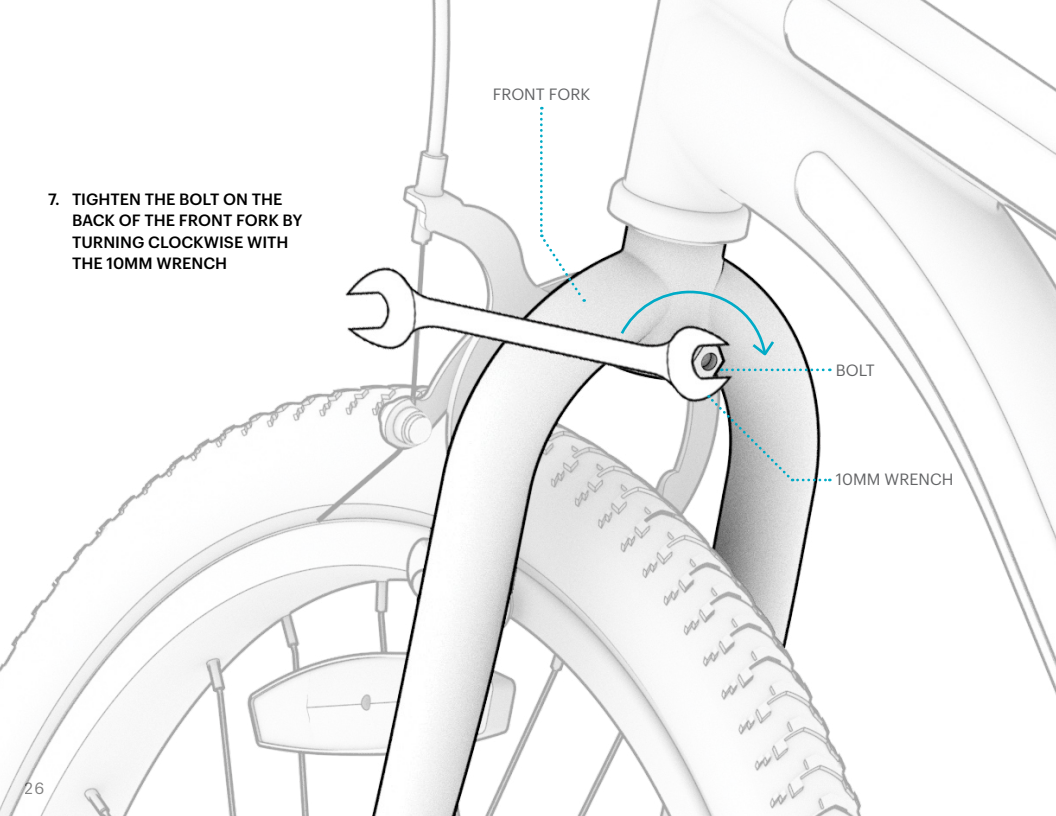

8. **TIGHTEN THE LOCK NUT ON THE TOP FRONT OF THE BRAKE CALIPER BY TURNING IT CLOCKWISE WITH THE 10MM WRENCH.**

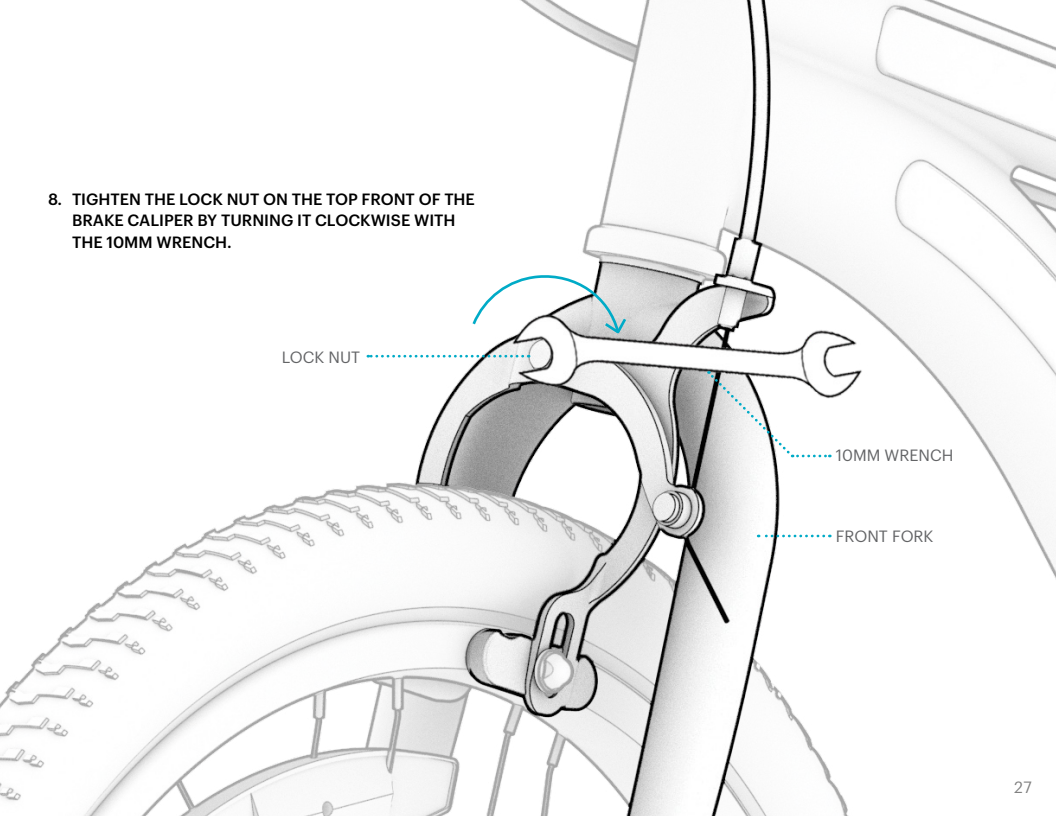

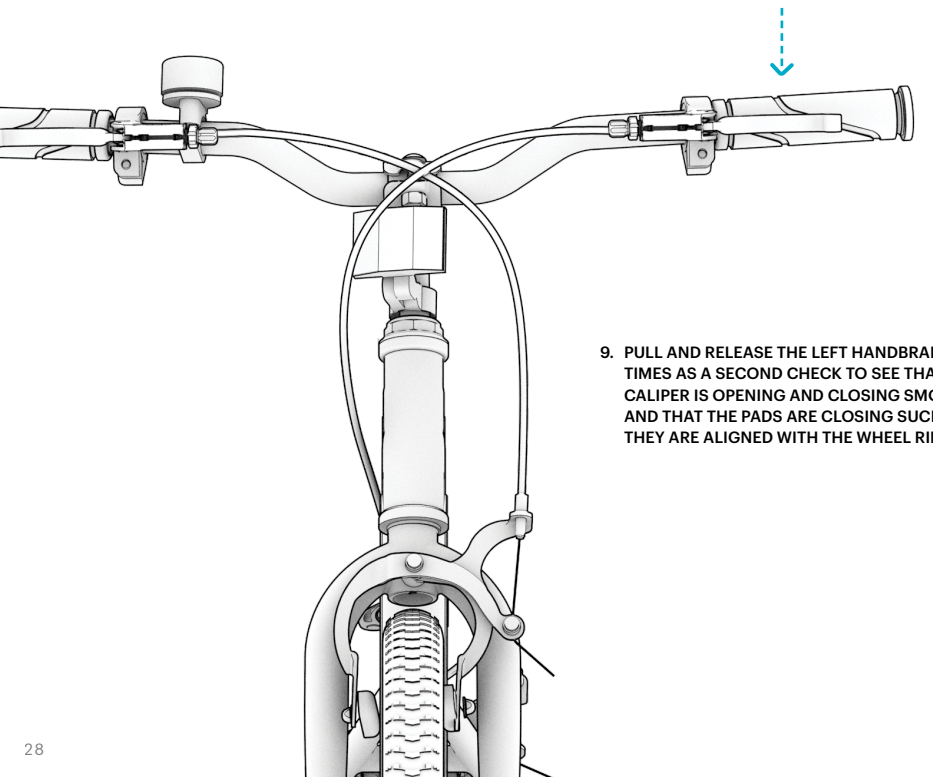

9. **PULL AND RELEASE THE LEFT HANDBRAKE A FEW TIMES AS A SECOND CHECK TO SEE THAT THE CALIPER IS OPENING AND CLOSING SMOOTHLY AND THAT THE PADS ARE CLOSING SUCH THAT THEY ARE ALIGNED WITH THE WHEEL RIM.**

1.6 Adjusting the Rear Brake

1. PULL AND RELEASE THE REAR BRAKE LEVER (THE HANDBRAKE ON THE RIGHT SIDE OF THE HANDLEBAR) SEVERAL TIMES. CHECK THAT THE CALIPER IS OPENING AND CLOSING SMOOTHLY AND THAT THE REAR BRAKE PADS ARE CLOSING SUCH THAT THEY ARE ALIGNED WITH THE REAR BRAKE RIM.
2. IF NECESSARY, ADJUST THE REAR BRAKE FOLLOWING THE SAME METHOD AS USED TO GET THE FRONT BRAKE PROPERLY INSTALLED.
3. LOOSEN THE CABLE ANCHOR NUT ON THE SIDE OF THE REAR BRAKE CALIPER BY TURNING IT COUNTERCLOCKWISE WITH THE 10MM WRENCH.
4. REPOSITION THE CALIPER SO THAT THE PADS ARE ALIGNED AND EVENLY SPACED WITH THE TIRE RIM.
5. SQUEEZE AND HOLD THE CALIPER CLOSED, AND THEN PULL THE SLACK OUT OF THE BRAKE CABLE UNTIL THE CABLE IS TAUT.
6. WITHOUT LETTING GO OF THE CALIPER, TIGHTEN THE CABLE ANCHOR NUT BY TURNING IT COUNTERCLOCKWISE WITH THE WRENCH.

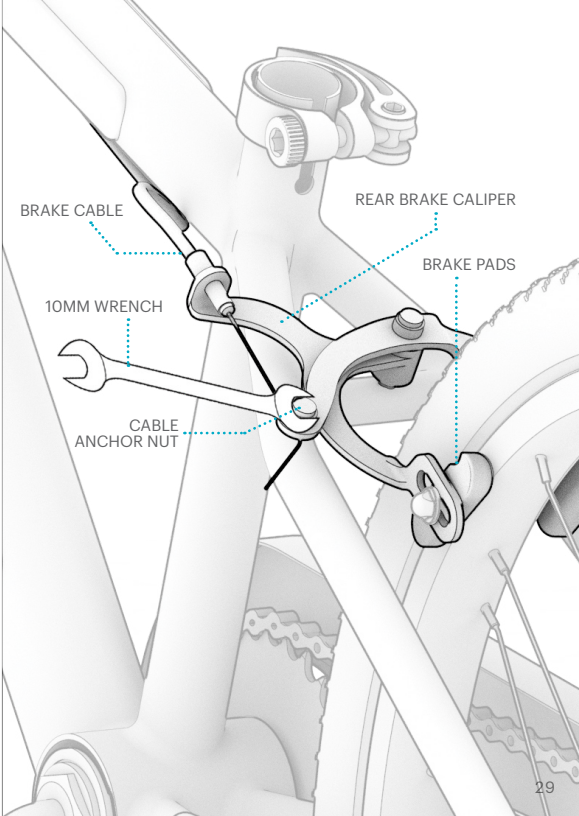

1.7 Attaching the Seat

1. PULL OPEN THE LATCH ON THE SEAT CLAMP.
2. LOCATE THE "MINIMUM INSERTION" MARK ENGRAVED NEAR THE BOTTOM OF THE SEAT POST. LOWER THE SEAT POST THROUGH THE CLAMP AND INTO THE SEAT TUBE. (IF THE CLAMP OPENING IS TOO NARROW TO RECEIVE THE POST, YOU CAN WIDEN IT BY TURNING THE KNOB COUNTERCLOCKWISE WHILE HOLDING THE LATCH STEADY.)
3. SLIDE THE SEAT POST DOWN AT LEAST UNTIL THE "MINIMUM INSERTION" MARK IS NO LONGER VISIBLE. ADJUST THE SEAT HEIGHT TO RIDER'S COMFORT AND ROTATE IT SO THAT THE NARROW END IS AT THE FRONT, IN LINE WITH THE FRAME.

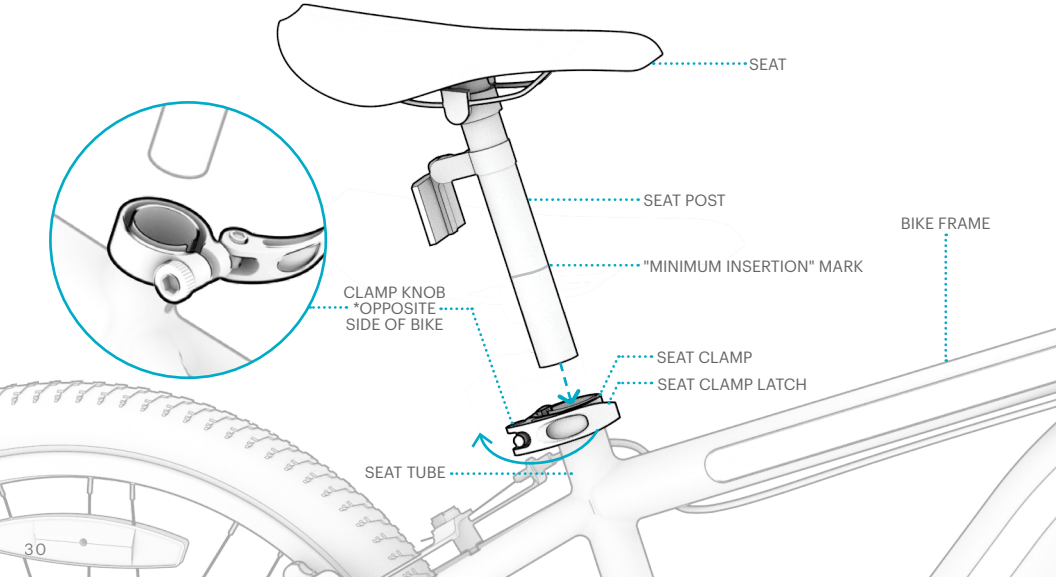

4. CLOSE THE LATCH ON THE SEAT CLAMP.

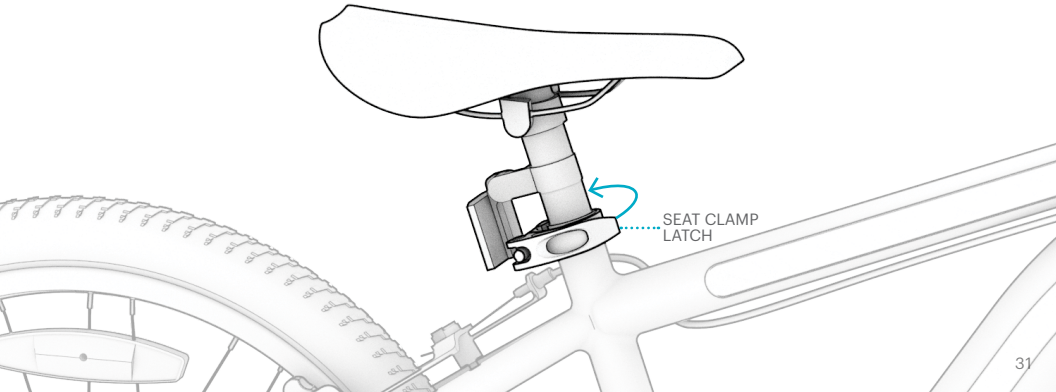

5. CHECK THAT THE SEAT IS SECURE: USE YOUR HAND TO PUT DOWNWARD PRESSURE ON THE SEAT. IF THE SEAT POST SLIPS FURTHER DOWN INTO THE TUBE, BRING IT BACK TO POSITION AND TIGHTEN THE CLAMP BY TURNING THE KNOB CLOCKWISE.

NOTE: IF YOU CANNOT OPEN OR CLOSE THE CLAMP LATCH, THE CLAMP KNOB MAY BE TOO TIGHT. LOOSEN THE KNOB BY TURNING IT COUNTERCLOCKWISE.

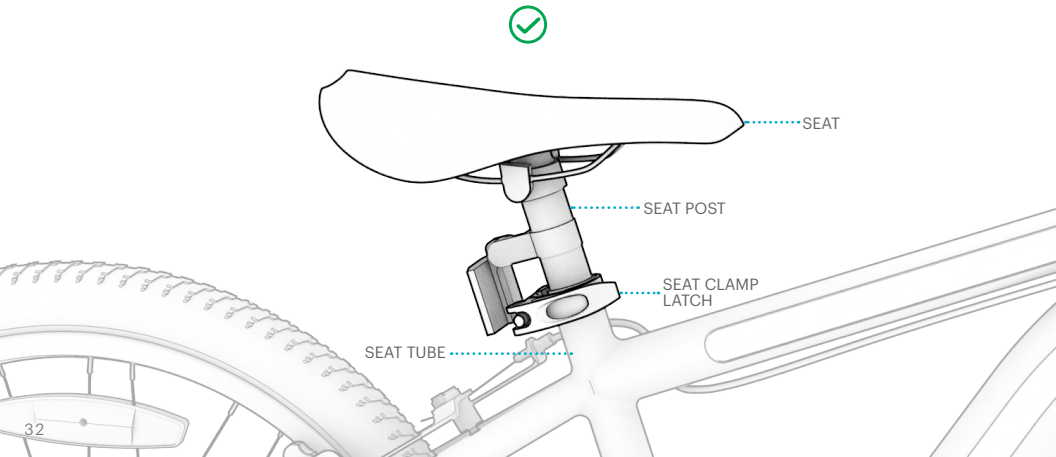

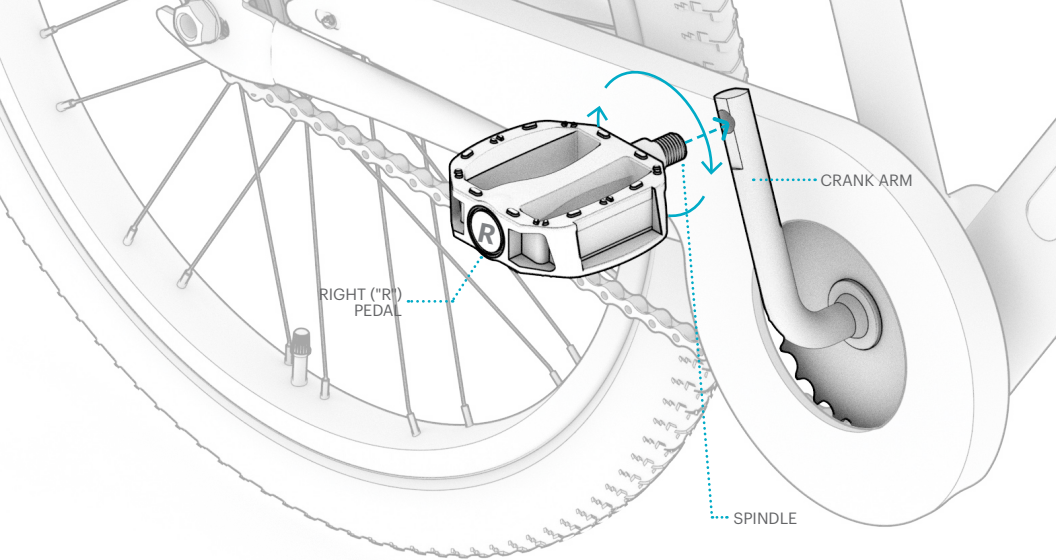

1.8 Attaching the Pedals

YOU WILL NEED THE 15MM WRENCH.

1. NOTE THE "R" AND "L" MARKINGS ON THE END OF SPINDLE OF EACH PEDAL, INDICATING "RIGHT" AND "LEFT."
2. ALIGN THE SPINDLE ON "R" PEDAL WITH THE HOLE AT THE END OF THE CRANK ARM ON THE SIDE OF THE BIKE WHERE YOU WILL PEDAL WITH YOUR RIGHT FOOT.
3. HOLD THE PEDAL BASE STEADY AND, TAKING CARE THAT THE SPINDLE ENTERS THE HOLE STRAIGHT, USE YOUR OTHER HAND TO TWIST THE SPINDLE CLOCKWISE INTO THE HOLE FOR A FEW ROTATIONS.

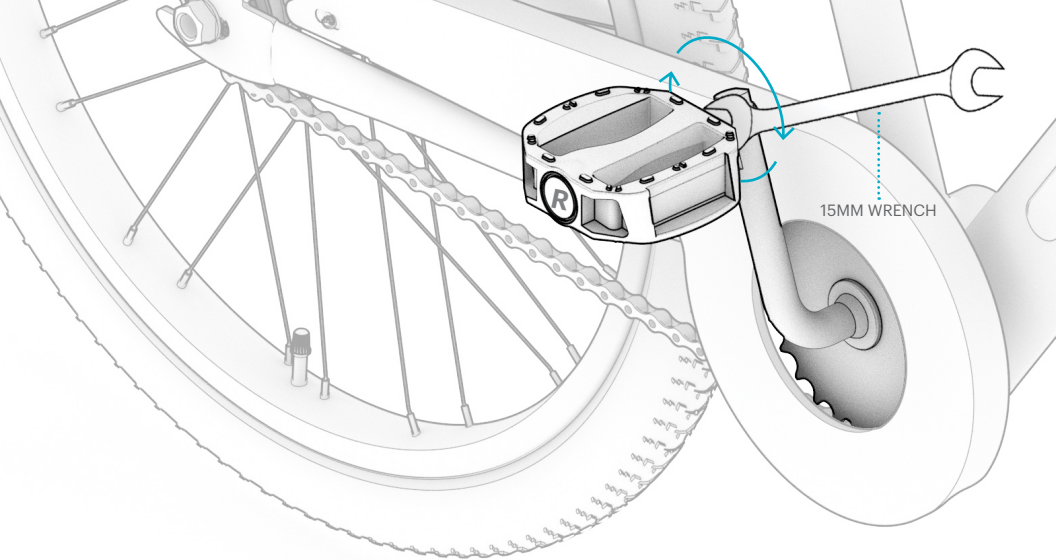

4. FINISH INSERTING AND THEN TIGHTENING THE PEDAL INTO THE CRANK ARM BY TURNING IT CLOCKWISE WITH THE 15MM WRENCH. CHECK THAT THE RIGHT PEDAL IS SECURE.
5. REPEAT STEPS 2-4 WITH THE LEFT ("L") PEDAL.
   IMPORTANT: THE SPINDLE ON THE LEFT PEDAL IS REVERSE THREADED AND NEEDS TO BE INSERTED AND TIGHTENED WITH COUNTERCLOCKWISE TURNS.

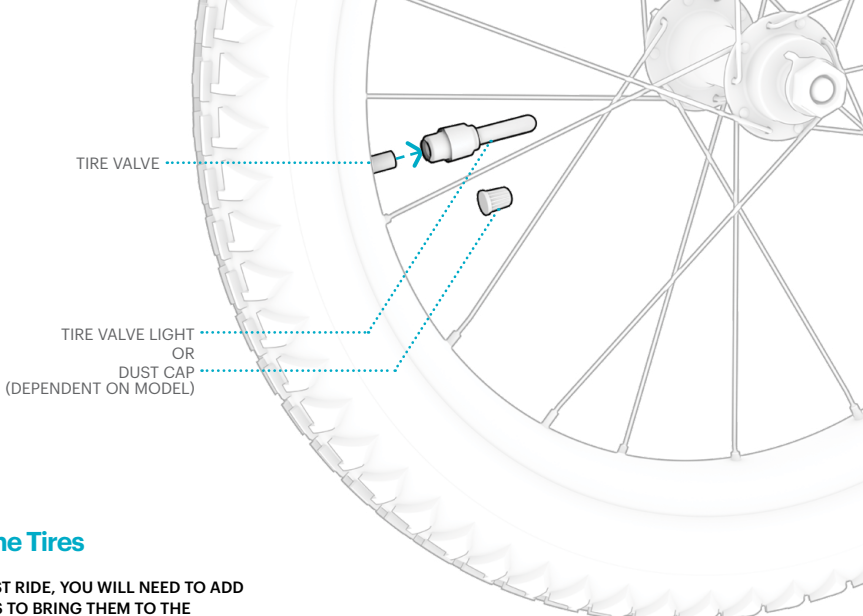

1.9 Inflating the Tires

BEFORE YOUR FIRST RIDE, YOU WILL NEED TO ADD AIR TO YOUR TIRES TO BRING THEM TO THE RECOMMENDED PRESSURE OF 43 PSI (POUNDS PER SQUARE INCH). USE A GAUGE TO CHECK THAT THE TIRE PRESSURE IS AT OR AROUND 43 PSI PRIOR TO EVERY RIDE.

TO ADD AIR (ALL MODELS):

1. **REMOVE THE DUST CAP OR TIRE VALVE LIGHT (DEPENDENT ON YOUR MODEL) BY FINGER-TWISTING IT OFF COUNTERCLOCKWISE. SET THE CAP OR LIGHT ASIDE.**

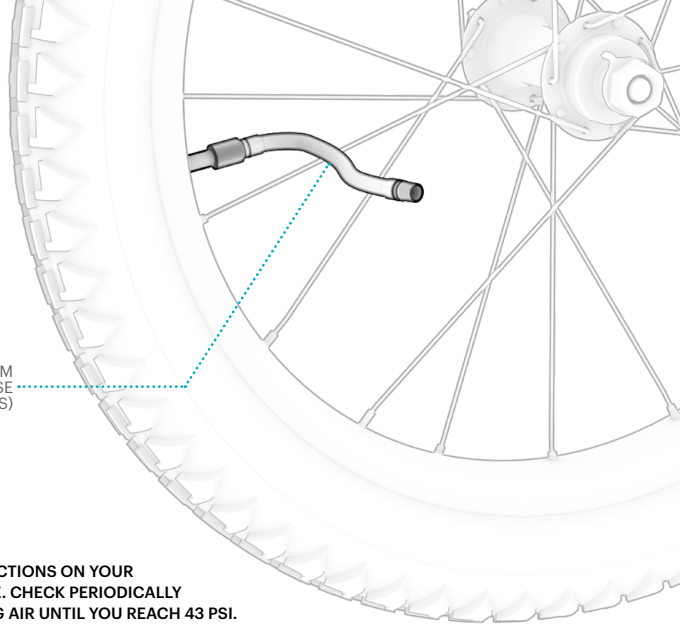

2. FOLLOW THE MANUFACTURE'S INSTRUCTIONS ON YOUR AIR PUMP TO INSERT AIR INTO THE TIRE. CHECK PERIODICALLY WITH A GAUGE AND CONTINUE ADDING AIR UNTIL YOU REACH 43 PSI.
   - **TO USE THE TIRE VALVE STEM EXTENSION HOSE (INCLUDED WITH SOME MODELS):** FINGER TWIST THE LARGER END OF THE HOSE ONTO THE TIRE VALVE, AND THEN ATTACH YOUR AIR PUMP INTO THE OTHER END OF THE HOSE.

   IMPORTANT: ONLY USE A MANUAL AIR PUMP TO INFLATE THE TIRES ON YOUR BIKE. NEVER USE AN AIR COMPRESSOR; DOING SO MAY CAUSE THE TIRE TUBES TO POP.

3. REMOVE THE AIR PUMP (AND TIRE VALVE STEM EXTENSION HOSE, IF USING) FROM THE VALVE.

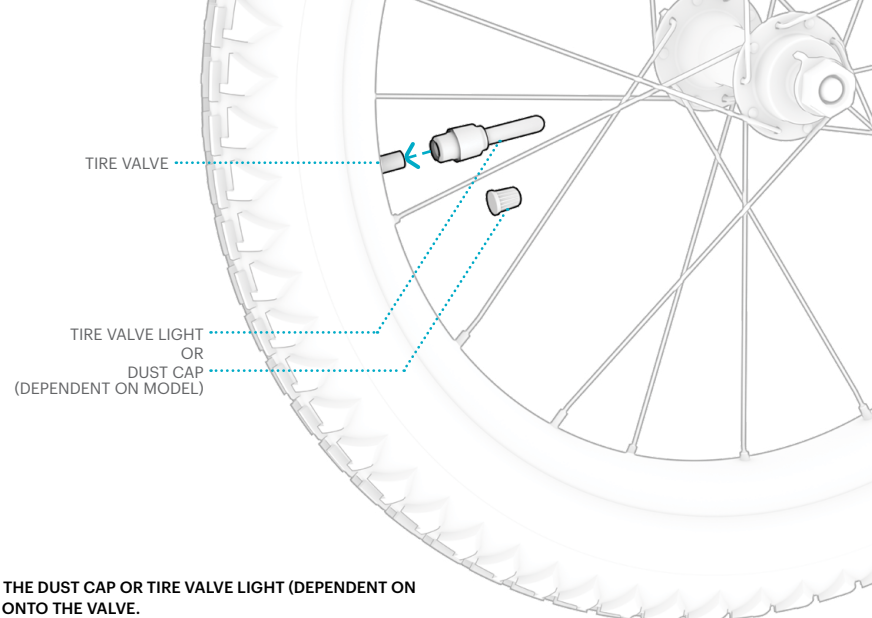

4. **FINGER-TWIST THE DUST CAP OR TIRE VALVE LIGHT (DEPENDENT ON YOUR MODEL) ONTO THE VALVE.**
5. **REPEAT WITH THE OTHER TIRE.**

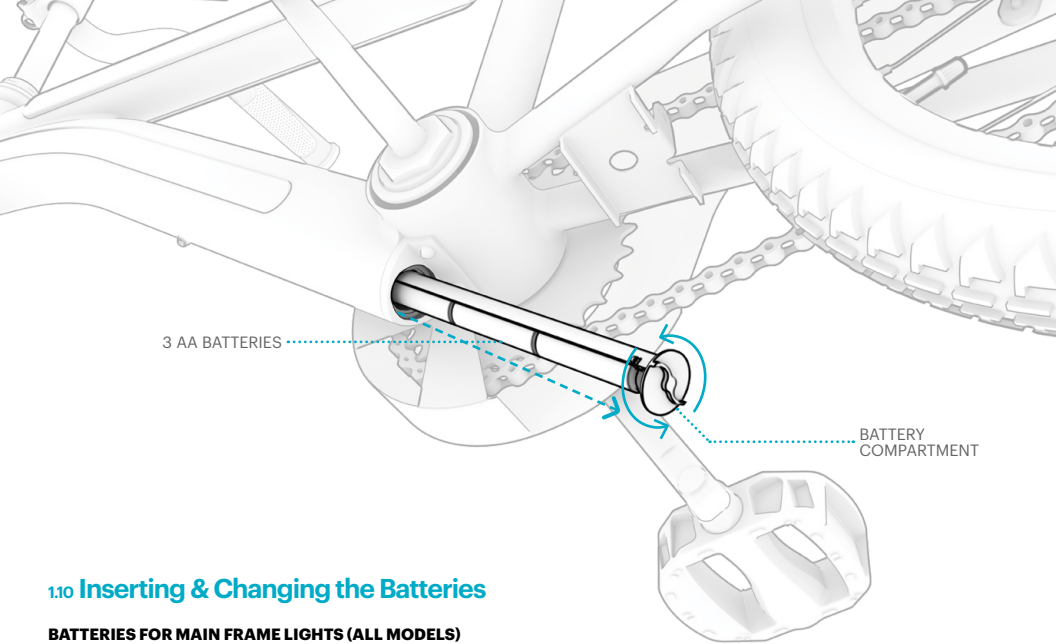

1.10 Inserting & Changing the Batteries

BATTERIES FOR MAIN FRAME LIGHTS (ALL MODELS)
YOU WILL NEED 3 AA BATTERIES (NOT INCLUDED).

1. **TO UNLOCK THE BATTERY COMPARTMENT, GENTLY PUSH THE END OF IT AND TURN IT COUNTERCLOCKWISE.**
2. **PULL THE BATTERY COMPARTMENT OUT FROM THE FRAME.**
3. **INSERT 3 AA BATTERIES IN THE COMPARTMENT ACCORDING TO THE +/- INDICATORS ON THE INSIDE OF THE COMPARTMENT.**

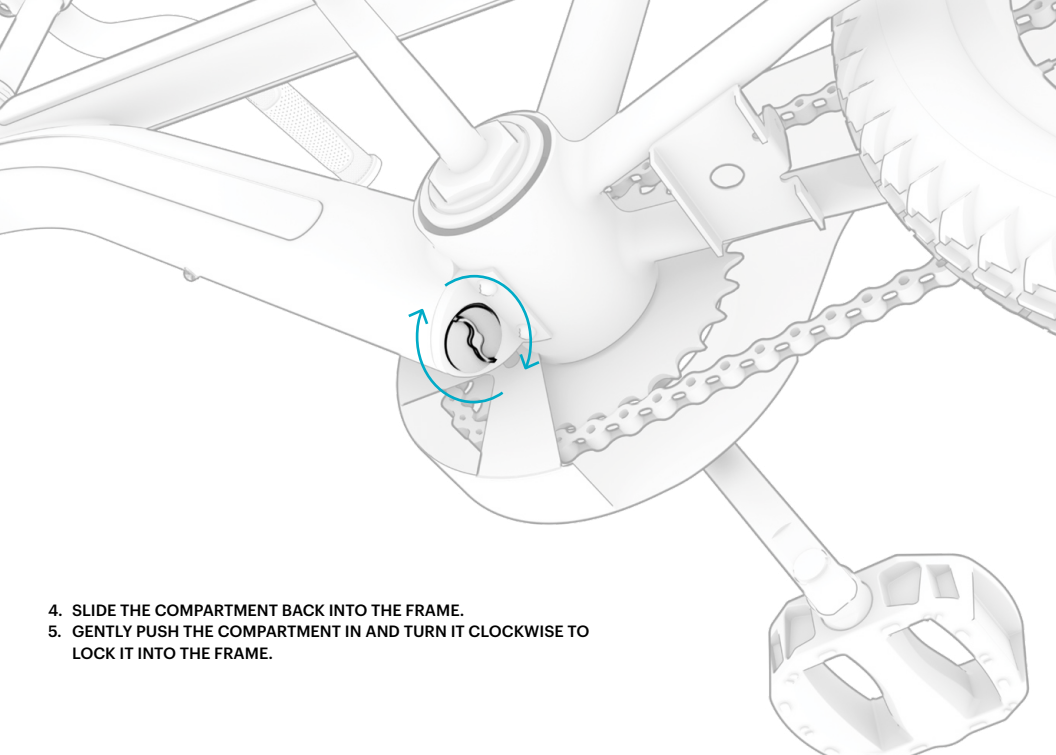

4. SLIDE THE COMPARTMENT BACK INTO THE FRAME.
5. GENTLY PUSH THE COMPARTMENT IN AND TURN IT CLOCKWISE TO LOCK IT INTO THE FRAME.

BATTERIES FOR TIRE VALVE LIGHTS (SOME MODELS)
EACH VALVE LIGHT REQUIRES 3 AG10 1.5V BATTERIES (INCLUDED).
PRIOR TO FIRST USE, A PROTECTIVE PACKAGING PIECE MUST BE REMOVED FROM INSIDE THE BATTERY COMPARTMENT.

1. **REMOVE THE VALVE CONNECTOR FROM THE LIGHT SECTION BY FINGER-TWISTING IT OFF COUNTERCLOCKWISE.**
2. **BEFORE FIRST USE: REMOVE ALL THREE BATTERIES FROM LIGHT AND SET THEM ASIDE. REMOVE AND DISCARD THE PAPER DISC IN BETWEEN THE BATTERIES AND THE SPRING.**
3. **RE-INSERT THE BATTERIES SUCH THAT THE "+" SIDE ON EACH IS FACING THE VALVE CONNECTOR AND THE "-" SIDE IS FACING THE SPRING. REPEAT WITH THE OTHER TWO BATTERIES.**
4. **FINGER-TWIST THE LIGHT SECTION CLOCKWISE ONTO THE VALVE CONNECTOR SECTION.**
5. **REPEAT STEPS 1–4 WITH THE OTHER VALVE LIGHTS.**

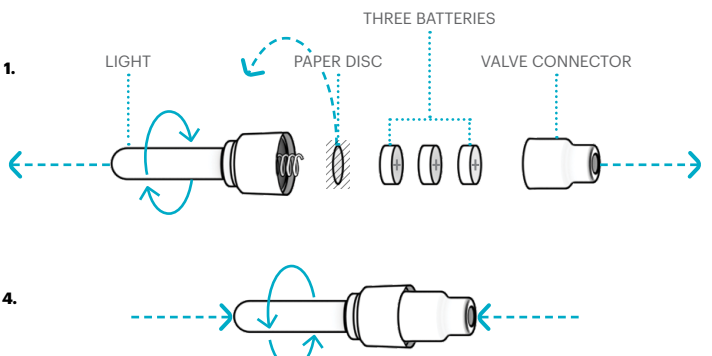

1.11 Pre-Ride Safety Checks

CONDUCT THESE IMPORTANT SAFETY CHECKS BEFORE EVERY RIDE.

BRAKES
- CHECK THE BRAKES ARE IN GOOD WORKING ORDER.
- CHECK THAT THE BRAKE PADS ARE NOT WORN, ARE ALIGNED, AND ARE CENTERED CORRECTLY ON THE WHEEL RIMS. (SEE PAGE 42.)
- CHECK THAT THE HANDBRAKE LEVERS ARE LUBRICATED AND ARE SECURED TO THE HANDLEBAR.
- CHECK THAT THE HANDBRAKES ARE POSITIONED SUCH THAT THEY CAN EASILY BE REACHED BY THE RIDER.

STEERING
- CHECK THAT THE HANDLEBAR IS SECURELY TIGHTENED TO THE STEM.
- CHECK THAT THE HANDLEBAR AND FRONT WHEEL ROTATE IN ALIGNMENT.

CRANKS AND PEDALS
- CHECK THAT THE PEDALS ARE SECURELY TIGHTENED TO THE CRANKS AND THAT THE CRANKS ARE TIGHTENED TO THE AXLE.
- CHECK THAT THE PEDALS ROTATE FORWARDS AND BACKWARDS SMOOTHLY.

WHEELS AND TIRES
- MAKE SURE THAT THE TIRES ARE INFLATED TO THE RECOMMENDED TIRE PRESSURE OF 43 PSI.
- CHECK TIRES AND WHEEL RIMS FOR EXCESSIVE WEAR OR ANY DAMAGE.
- CHECK THAT THE WHEEL SPOKES ARE NOT BROKEN AND THAT THE AXLE NUTS ARE TIGHT.

CHAIN
- MAKE SURE ALL BEARINGS ARE LUBRICATED AND MOVE SMOOTHLY.

FRAME AND FORK
- CHECK THAT THE FRAME AND FRONT FORK ARE NOT DAMAGED OR BROKEN.

CHECKING THE BRAKES

Check that the brake pads are in proper alignment and the brakes are functioning properly prior to every ride. To readjust alignment of the pads, loosen the bolts on the brake caliper, place the pads in the correct position, and re-tighten the bolts.

Incorrect Alignment:

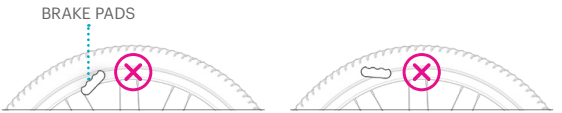

Correct Alignment:



Check that the brake pads are centered correctly. To do this, check that there is even gap between the rim, fork, and brake pads.

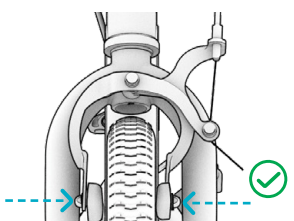

2. Features & Functions

2.1 Using the Bell

USE THE BELL AS AN ALERT TO OTHER RIDERS AND PEDESTRIANS.

TO SOUND THE BELL, FLICK DOWN ON THE BELL TAB QUICKLY AND FORCEFULLY WITH YOUR RIGHT-HAND THUMB.

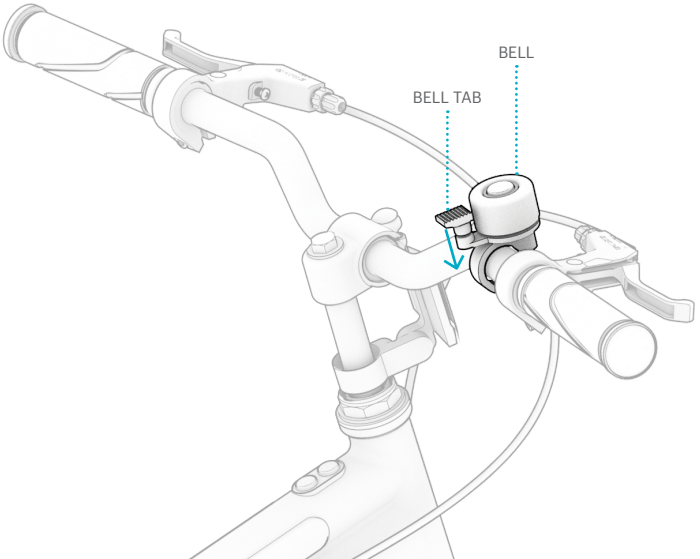

2.2 Using the Lights

FRAME LIGHTS
YOU CAN LIGHT UP YOUR RIDE WITH 4 DIFFERENT LIGHTING PATTERNS AND IN 8 DIFFERENT COLORS (INCLUDING "MULTI").

TO TURN THE LIGHTS ON OR OFF: PRESS AND HOLD THE LIGHTING POWER BUTTON FOR 1-2 SECONDS.

TO CHANGE TO ANOTHER LIGHTING PATTERN (4 TOTAL): PRESS AND HOLD THE MODE BUTTON FOR 3-4 SECONDS.

TO CHANGE TO ANOTHER LIGHT COLOR WITHIN THE PATTERN THAT YOU HAVE SET: QUICK-PRESS THE MODE BUTTON.

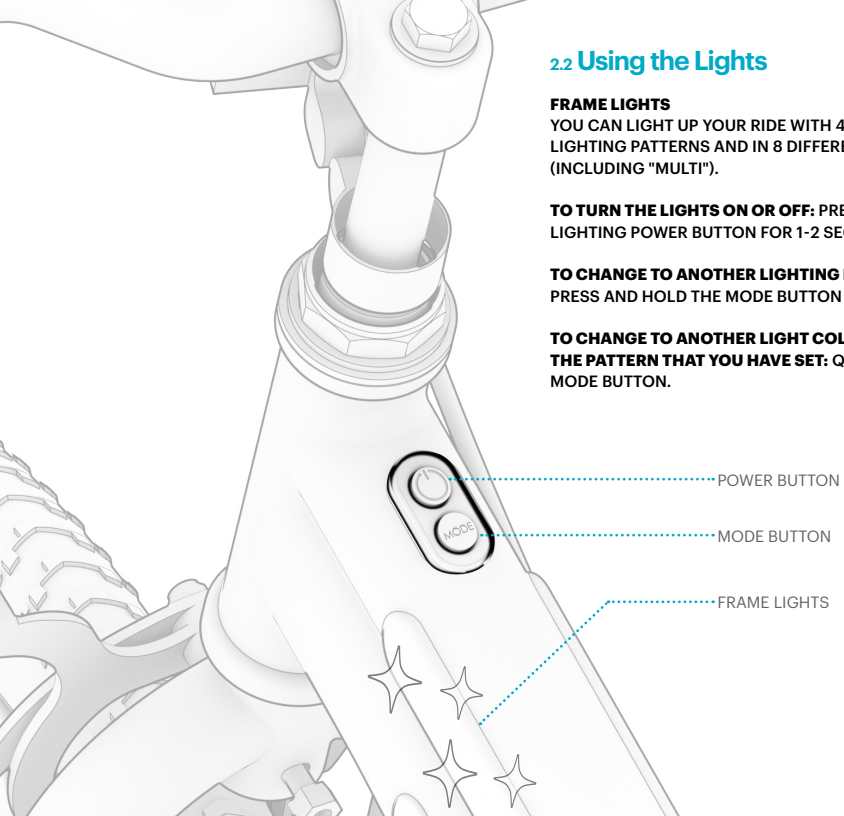

NOTE: TIRE VALVE LIGHTS (INCLUDED WITH SOME MODELS) WILL ILLUMINATE WHENEVER THEY ARE IN MOTION.

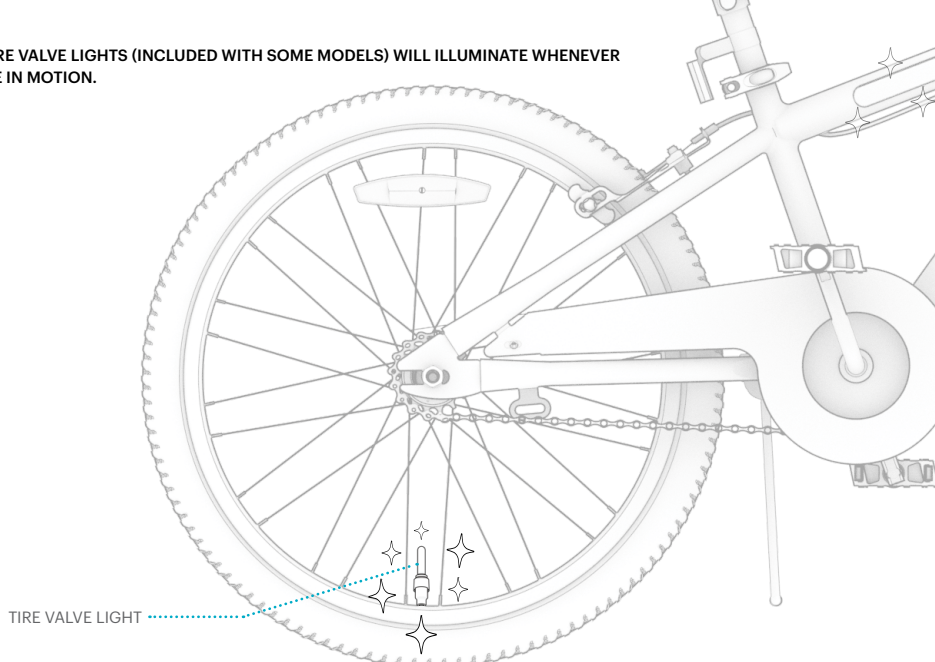

IMPORTANT: ALWAYS REMEMBER TO TURN FRAME YOUR LIGHTS OFF AFTER A RIDE.
NOTE: TO PRESERVE BATTERY POWER, THE FRAME LIGHTS WILL AUTOMATICALLY TURN OFF 10 MINUTES AFTER THEY HAVE BEEN POWERED ON. TO TURN THE FRAME LIGHTS BACK ON AND RESET THEM TO YOUR DESIRED PATTERN AND COLOR, FOLLOW THE INSTRUCTIONS ON PAGE 45.

2.3 Using the Kickstand

TO USE THE KICKSTAND, PIVOT IT DOWN AND GENTLY TILT YOUR BIKE ONTO IT TO STAND. TO RAISE THE KICKSTAND, PIVOT IT BACK UP.

IMPORTANT: ALWAYS RAISE THE KICKSTAND BEFORE RIDING.

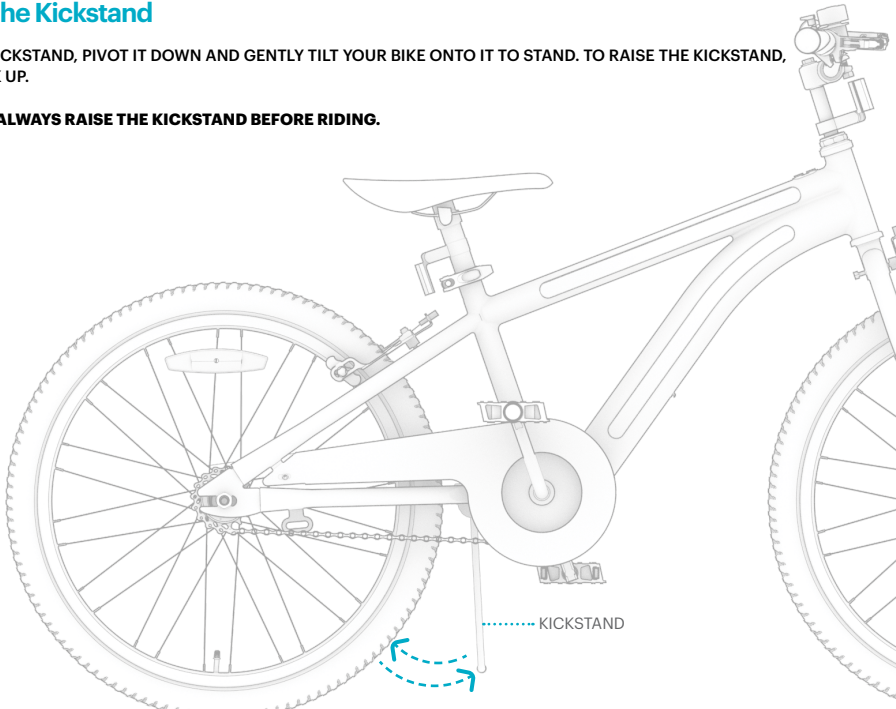

3. Making Moves

3.1 Riding Your Jetson Light Rider

NOW THAT YOU HAVE YOUR JETSON LIGHT RIDER 20 SAFELY ASSEMBLED, IT'S TIME TO RIDE OUT AND LIGHT UP THE WORLD.

TO MOVE: ROTATE THE PEDALS FORWARD.
TO TURN: ROTATE THE HANDLEBAR LEFT OR RIGHT.

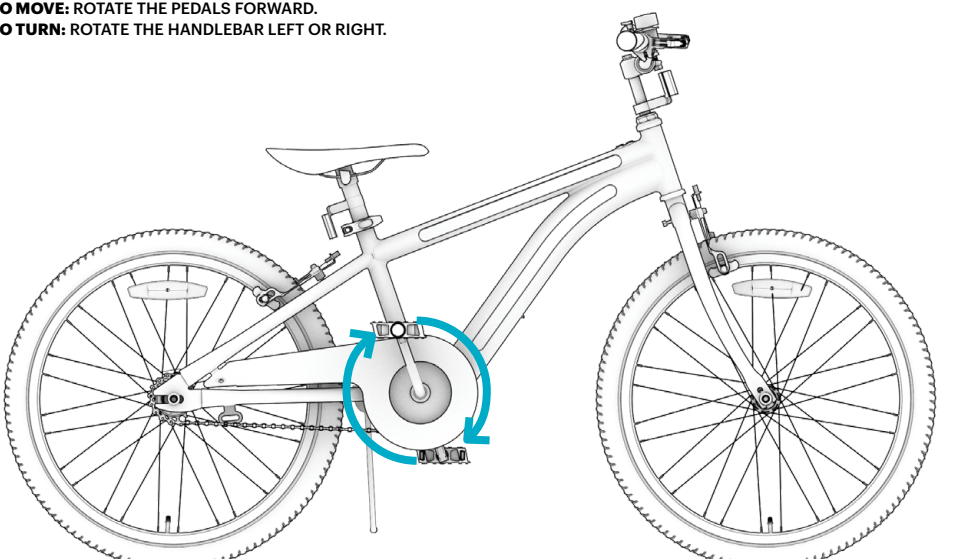

3.2 Using the Brakes

SQUEEZE ONE OR BOTH HANDBRAKES TO SLOW DOWN; SQUEEZE MORE FORCEFULLY TO COME TO A COMPLETE STOP. TO AVOID ABRUPT MOVEMENTS, TRY TO SQUEEZE THE HANDBRAKE(S) GRADUALLY.

- **LEFT HANDBRAKE → FRONT WHEEL BRAKE**
- **RIGHT HANDBRAKE → REAR WHEEL BRAKE**

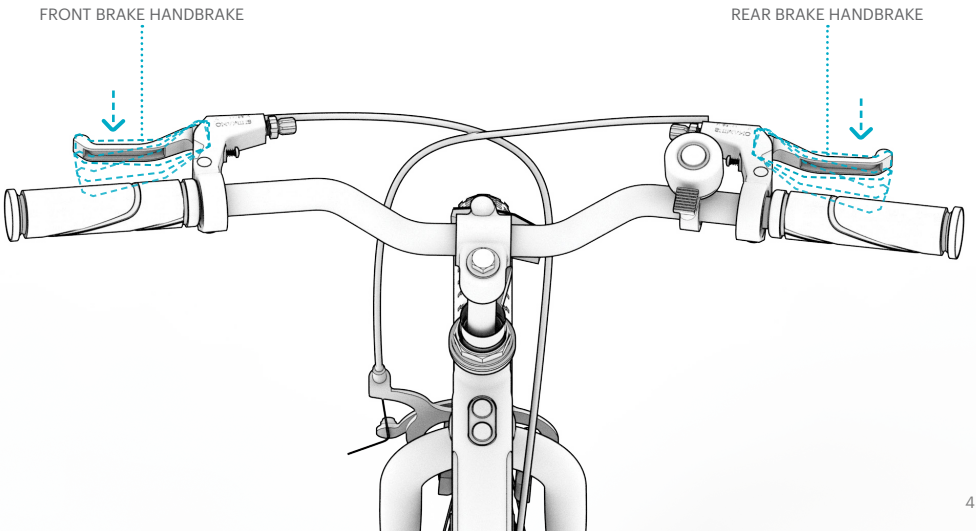

3.3 Helmet Safety

A HELMET SHOULD BE WORN BY THE RIDER AT ALL TIMES.



PROPER POSITIONING:
THE FOREHEAD IS COVERED BY THE HELMET.



IMPROPER POSITIONING:
THE FOREHEAD IS EXPOSED.
A FALL COULD RESULT IN SERIOUS INJURY.

* WEAR A HELMET, APPROPRIATE CLOTHING, SHOES, AND SAFETY GEAR. AVOID CLOTHING THAT CAN GET CAUGHT INTO OR UNDER THE WHEELS. CLOSED-TOE, FLAT SHOES ARE RECOMMENDED. WEAR AN ASTM F1492 APPROVED HELMET AND PROTECTIVE GEAR TO PREVENT INJURY IN THE EVENT OF AN ACCIDENT.

Care & Maintenance

CLEANING THE JETSON LIGHT RIDER

- CAREFULLY WIPE WITH A DAMP CLOTH AND THEN DRY WITH A DRY CLOTH.
- DO NOT APPLY WATER DIRECTLY TO THE JETSON LIGHT RIDER. THIS CAN CAUSE DAMAGE TO THE FRAME AND ELECTRICAL SYSTEMS, WHICH CAN RESULT IN MALFUNCTIONS THAT LEAD TO PERSONAL INJURY.

STORING THE JETSON LIGHT RIDER

- REMOVE BATTERIES BEFORE STORING.
- COVER TO PROTECT AGAINST DUST.
- STORE INDOORS AND IN A DRY PLACE.

ADJUSTING THE CHAIN:

WHEN THE CHAIN (C) IS AT THE CORRECT TIGHTNESS, THE CRANK CAN ROTATE FREELY AND THE CHAIN CAN BE PULLED NO MORE THAN ONE-HALF INCH (A) AWAY FROM A STRAIGHTEDGE (B), AS SHOWN.

- IF TOO TIGHT, THE BICYCLE WILL BE DIFFICULT TO PEDAL.
- IF TOO LOOSE, THE CHAIN CAN COME OFF THE SPROCKETS.

TO ADJUST THE CHAIN:

- LOOSEN THE AXLE NUTS OF THE REAR WHEEL.
- MOVE THE REAR WHEEL FORWARD OR BACKWARD AS NECESSARY.
  IMPORTANT: MAKE SURE THE REAR WHEEL IS CENTERED UNDER THE BICYCLE FRAME.
- HOLD THE WHEEL IN THE DESIRED POSITION AND TIGHTEN THE AXLE NUTS.

⚠WARNING:

DO NOT ATTEMPT TO REPAIR A BROKEN CHAIN. IF YOUR CHAIN BRAKES, BRING YOUR BICYCLE TO A BICYCLE SERVICE SHOP.

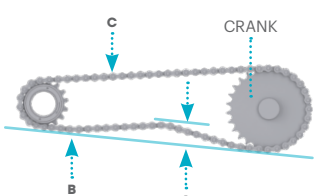

Stay connected.

Be sure to follow **@ridejetson**
on social media to learn about fantastic offers,
giveaways, and all the latest Jetson news.



Loving your ride?

Then be sure to leave a review at ridejetson.com/reviews.
We can't wait to hear from you!

JETSON

#MakeMoves

Questions? Let us help.

ridejetson.com/support
ridejetson.com/chat

To exercise your product's
1-year limited warranty
or inquire about warranty
coverage, contact us directly.

1-888-976-9904

Manufactured in Zhejiang, China
Imported by Jetson Electric Bikes LLC.
P.O. Box 320149, 775 4th Ave #2,
Brooklyn, NY 11232

www.ridejetson.com





Made in China
Date Code: 07/2024
Document Edition: v3.1

© 2024, JETSON. ALL RIGHTS RESERVED. Manufactured by JETSON ELECTRIC BIKES LLC.
No portion of this document, including shape, copy, graphics, and design,
may be reproduced or transmitted in any form or by any means.