JETSON

Light Rider (JLR) 12″

Kids' Light-Up Bicycle.

A guide for your ride.

IMPORTANT: READ CAREFULLY AND RETAIN FOR FUTURE REFERENCE.

MODELS: JLRG12-RGR | JLRG12-GRN | JLRG12-PUR

U.S. Patent No. 11,155,315
Designed in Brooklyn

WHAT'S NEXT?

Jetson's top two riding rules:
Be safe. Have fun!

Contents

Safety Warnings 4

Warranty Coverage 6

Pre-Ride Safety Checks 7

Product Overview 8

Specs & Features 10

Rider Suitability 10

Online Resources 11

1. Getting Started

- Starting Notes 12
- Attaching the Training Wheels 13
- Attaching the Front Wheel 17
- Installing the Handlebar 20
- Attaching the Seat 23
- Attaching the Pedals 26
- Inflating the Tires 28
- Inserting & Changing the Batteries 31

2. Features & Functions

Using the Brake 33

Using the Bell 34

Using the Lights 35

3. Making Moves

Riding Your Jetson Light Rider 37

Helmet Safety 38

Care & Maintenance 39

Safety Warnings

- Before use, please read the user manual and safety warnings carefully, and make sure you understand and accept all the safety instructions. The user will be responsible for any loss or damage caused by improper use.
- Before each cycle of operation, the operator shall perform the preoperation checks specified by the manufacturer: That all guards and pads originally supplied by the manufacturer are in proper place and in serviceable condition; That the braking system is functioning properly; That any and all axle guards, chain guards, or other covers or guards supplied by the manufacturer are in place and in serviceable condition; That tires are in good condition, inflated properly, and have sufficient tread remaining; The area that the product is to be operated should be safe and suitable for safe operation.
- Components shall be maintained and repaired in accordance with the manufacturer's specifications and using only the manufacturer's authorized replacement parts with installation performed by dealers or other skilled persons.
- Don't allow hands, feet, hair, body parts, clothing, or similar articles to come in contact with moving parts, wheels, or drive train, while the bike is in use.
- This product should not be used by children or persons with reduced physical, sensory or mental capabilities, or lack of experience and knowledge, unless they have been given supervision or instruction (IEC 60335-1/A2:2006).
- Unsupervised children should not play with the product (IEC 60335-1/A2:2006).
- Adult supervision is required.
- The rider should not exceed 80 lbs.
- Never use near motor vehicle.
- Units shall not be operated to perform racing, stunt riding, or other maneuvers, which may cause loss of control, or may cause uncontrolled operator/passenger actions or reactions.
- Avoid sharp bumps, drainage grates, and sudden surface changes. Bike may suddenly stop.
- Avoid streets and surfaces with water, sand, gravel, dirt, leaves, and other debris. Wet weather impairs traction, braking and visibility.
- Avoid riding around flammable gas, steam, liquid, or dust that could cause fire.
- Operators shall adhere to all of the manufacturer's recommendations and instructions, as well as comply with all laws and ordinances: Units without headlights shall be operated only with adequate daylight conditions of visibility, and; Owners shall be encouraged to highlight (for conspicuity) using lighting, reflectors, and for low-riding units, signal flags on flexible poles.
- Do not ride at night.
- Only ride the product with adequate daylight conditions for visibility.
- Persons with the following conditions shall be cautioned not to operate: Those with heart conditions; Pregnant women; Persons with head, back, or neck ailments, or prior surgeries to those areas of the body; and persons with any mental or physical conditions that may make them susceptible to injury or impair their physical dexterity or mental capabilities to recognize, understand, and perform all of the safety instructions and to be able to assume the hazards inherent in unit use.
- Do not ride after drinking or taking prescription medication.
- Do not carry items when riding.
- Never operate the product barefooted.
- Always wear shoes and keep shoelaces tied.

- Make sure your feet are always placed securely on the pedals.
- Operators always shall use appropriate protective clothing, including but not limited to a helmet, with appropriate certification, and any other equipment recommended by the manufacturer: Always wear protective equipment such as helmet, knee pads, and elbow pads.
- Always give way to pedestrians.
- Be alert to things in front and far away from you.
- Do not allow distractions when riding, such as answering the phone or engaging in any other activities.
- The product cannot be ridden by more than one person.
- When you ride the product along with other riders, always keep a safe distance to avoid a collision.
- When turning, be sure to maintain your balance.
- Riding with improperly adjusted brakes is dangerous and can result in serious injury or death.
- Applying brakes too hard or too suddenly can lock up a wheel, which could cause you to lose control and fall. Sudden or excessive application of the brake may result in injury or death.
- If the brake loosens, please adjust with the hexagon wrench, or please contact the Jetson Care Team.
- Replace worn or broken parts immediately.
- The area that the product is to be operated should be safe and suitable for safe operation.
- Check whether all safety labels are in place and understood before riding.
- The owner shall allow the use and operation of the unit after a demonstration that such operators can understand and operate all components of the unit before use.
- Use caution when changing the batteries. Do not change batteries near flammable materials. Remove batteries from the bike when not in use for long periods of time.
- Do not mix old and new batteries.
- Do not mix alkaline, standard (carbon-zing) or rechargeable batteries.
- Prolonged exposure to UV rays, rain and the elements may damage the enclosure materials, store indoors when not in use.

MODIFICATIONS

Do not attempt to disassemble, modify, repair, or replace the product or any components of the unit without instruction from the Jetson Care Team. This will void any warranty, and can lead to malfunctions which may cause injury.

ADDITIONAL OPERATION PRECAUTIONS

- Do not lift the product off the ground while it is on and the wheels are in motion. This can result in freely spinning wheels, which may cause injury to yourself or others nearby.
- Do not jump on or off the product, and do not jump while using it.
- Always keep your feet firmly planted on the pedals while in operation.
- The Consumer Product Safety Commission advises that the riding of small wheel diameter bicycles at excessive speeds can lead to instability and is not recommended.
- Always wear a properly fitted helmet when you ride your bicycle. Do not ride at night. Avoid riding in wet conditions.

MAINTENANCE PRECAUTIONS

For all maintenance repairs and needs beyond the capability of the consumer which may include but not limited to such as proper maintenance of brakes, control cables, bearing adjustments, wheel adjustments, lubrication, reflectors, tires and handlebar and seat adjustments, please contact the Jetson Care Team for assistance at:

ridejetson.com/chat
ridejetson.com/support
1-844-585-7462

DISPOSAL OF USED BATTERY



Battery may contain hazardous substances which could endanger the environment and human health. This symbol marked on the battery and/or packaging indicates that used battery shall not be treated as municipal waste. Batteries should be disposed of at an appropriate collection point for recycling. By ensuring the used batteries are disposed of correctly, you will help preventing potential negative consequences for the environment and human health. The recycling of materials will help to conserve natural resources. For more information about recycling of used batteries, please contact your local municipality waste disposal service.

California Proposition 65

⚠WARNING:

This product can expose you to chemicals including Cadmium, which is known to the State of California to cause cancer and birth defects or other reproductive harm. For more information go to: www.P65Warnings.ca.gov.

Warranty Coverage

GENERAL LIMITED WARRANTY

Your new Jetson product is warranted against defects in materials and workmanship as indicated on ridejetson.com/warranty for a period of time from the date of original retail purchase when used in accordance with Jetson's user manuals (refer to ridejetson.com/support). **Under this warranty, you will be able to direct your claims to Jetson even in situations where you purchased the Jetson Product from one of our authorized retailers.** To read the full terms of our warranty, visit ridejetson.com/warranty.

Pre-Ride Safety Checks

CONDUCT THESE IMPORTANT SAFETY CHECKS BEFORE EVERY RIDE.

BRAKE
- CHECK THE BRAKE IS IN GOOD WORKING ORDER.
- CHECK THAT THE COASTER BRAKE IS ACTIVATED WHEN THE PEDALS ARE ROTATED BACKWARDS AND THAT THE BRAKE IS IN WORKING ORDER.

STEERING
- CHECK THAT THE HANDLEBAR IS SECURELY TIGHTENED TO THE STEM.
- CHECK THAT THE HANDLEBAR AND FRONT WHEEL ROTATE SIMULTANEOUSLY.

CRANKS AND PEDALS
- CHECK THAT THE PEDALS ARE SECURELY TIGHTENED TO THE CRANKS AND THAT THE CRANKS ARE TIGHTENED TO THE AXLE.
- MAKE SURE THE AXLE IS LUBRICATED TO FACILITATE MOVEMENT.

WHEELS AND TIRES
- MAKE SURE THAT THE TIRES ARE INFLATED TO WITHIN THEIR MAXIMUM RECOMMENDED TIRE PRESSURE OF 36 - 40 PSI.
- CHECK TIRES AND WHEEL RIMS FOR EXCESSIVE WEAR OR ANY DAMAGE.
- CHECK THAT THE WHEEL SPOKES ARE NOT BROKEN AND THAT THE AXLE NUTS ARE TIGHT.

CHAIN
- MAKE SURE ALL BEARINGS ARE LUBRICATED AND MOVE SMOOTHLY.

FRAME AND FORK
- CHECK THAT THE FRAME AND FRONT FORK ARE NOT DAMAGED OR BROKEN.

TRAINING WHEELS
- CHECK THAT THE TRAINING WHEELS ARE FULLY SECURED TO THE FRAME AND ARE POSITIONED SUCH THAT THEY PROP THE BIKE IN A BALANCED AND STEADY UPRIGHT POSITION.
- CHECK THAT THE WHEELS ROTATE EASILY.

Product Overview

1. **BIKE FRAME**
2. **FRONT WHEEL***
3. **HANDLEBAR***
4. **BELL**
5. **SEAT***
6. **PEDALS WITH REFLECTORS** (X2; LEFT AND RIGHT)*
7. **TRAINING WHEELS** (X2)*
8. **TIRE VALVES**
9. **DUST CAPS**
10. **CHAIN**
11. **CHAIN GUARD**
12. **LED LIGHTS**
13. **LIGHTNING POWER AND CONTROL BUTTONS**
14. **REAR WHEEL**
15. **SEAT POST**
16. **SEAT CLAMP**
17. **COASTER BRAKE**
18. **FRONT FORK**

* NOT PRE-ATTACHED; REQUIRES ASSEMBLY.

TOOLS AND ACCESSORIES INCLUDED:



DOUBLE-SIDED 13MM AND 15MM WRENCH

* ADULTS MUST ASSIST CHILDREN IN THE ASSEMBLY AND INITIAL ADJUSTMENT PROCEDURES OF THE PRODUCT.

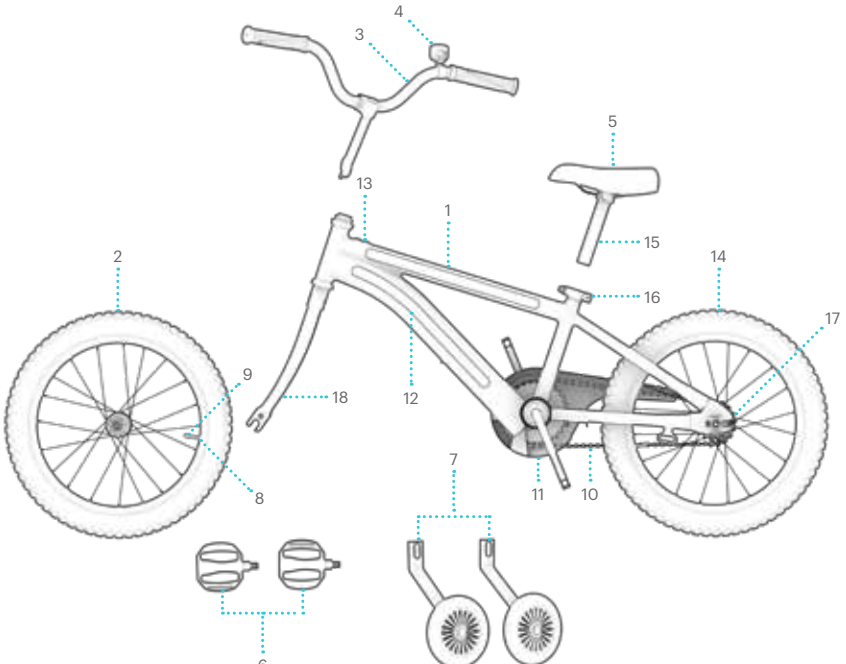

NOTE: IMAGES MAY NOT REFLECT EXACT APPEARANCE OF ACTUAL PRODUCT.

Specs & Features

MODEL JLRG12-RGR:

- PRODUCT DIMENSIONS: 35.4" (L) x 20.4" (W) x 26.0" (H)
- PRODUCT WEIGHT: 17.1 LB

MODELS JLRG12-GRN & JLRG12-PUR:

- PRODUCT DIMENSIONS: 35.4" (L) x 19.0" (W) x 26.0" (H)
- PRODUCT WEIGHT: 17.9 LB

ALL MODELS:

- HANDLEBAR HEIGHT: 26.0"
- SEAT HEIGHT: 17" - 20"
- TIRE SIZE: 12"
- BRAKE TYPE: COASTER
- WEIGHT LIMIT: 80 LB
- RECOMMENDED AGE: 3+
- RECOMMENDED TIRE PRESSURE: 36 - 40 PSI
- BATTERIES REQUIRED: 3 AA (NOT INCLUDED)

Rider Suitability

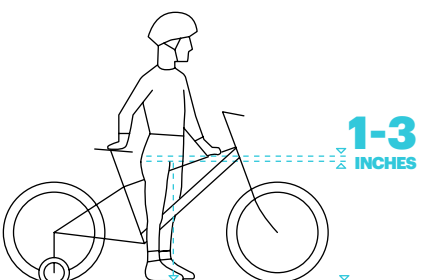

FOR SAFE AND COMFORTABLE RIDING, THERE SHOULD BE A CLEARANCE OF AT LEAST 1 - 3 INCHES BETWEEN THE CROTCH AND THE TOP TUBE OF THE BICYCLE FRAME WHEN THE RIDER STRADDLES THE BICYCLE WITH BOTH FEET FLAT ON THE GROUND.

Online Resources

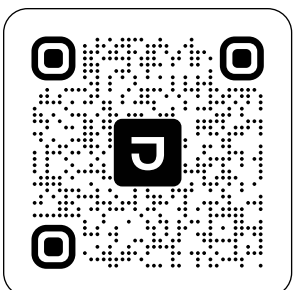

Scan for our most updated Jetson Light Rider 12" onboarding materials and support resources.

1. Getting Started

1.1 Starting Notes

- **REMOVE ALL PACKAGING PIECES BEFORE BEGINNING ASSEMBLY: AT THE BASE OF THE FRONT FORK AND HANDLEBAR STEM, ON THE SEAT CLAMP AND WHEEL AXLES, ETC.**
- **THE DIRECTIONS GIVEN IN THIS MANUAL—RIGHT, LEFT, FRONT/FORWARD, AND REAR/BACK—ARE ORIENTED AS THE RIDER WOULD SEE THEM WHEN SEATED ON THE BIKE. THE "RIGHT SIDE" OF THE BIKE, FOR EXAMPLE, IS THE SIDE WHERE THE RIDER'S RIGHT HAND AND FOOT WILL BE.**
- **IT IS HELPFUL TO HAVE AN EXTRA SET OF HANDS TO HELP WITH ASSEMBLY. GRAB AN ASSISTANT!**

⚠WARNING:

FAILURE TO COMPLY WITH THE FOLLOWING INSTRUCTIONS MAY RESULT IN INJURY TO THE CHILD OR OTHERS.
- KEEP SMALL PARTS AWAY FROM CHILDREN DURING ASSEMBLY.
- ACCESSORY MUST BE ASSEMBLED AND REMOVED BY AN ADULT.
- FREQUENTLY INSPECT THE PRODUCT FOR DAMAGE.

* ADULTS MUST ASSIST CHILDREN IN THE ASSEMBLY AND INITIAL ADJUSTMENT PROCEDURES OF THE PRODUCT.

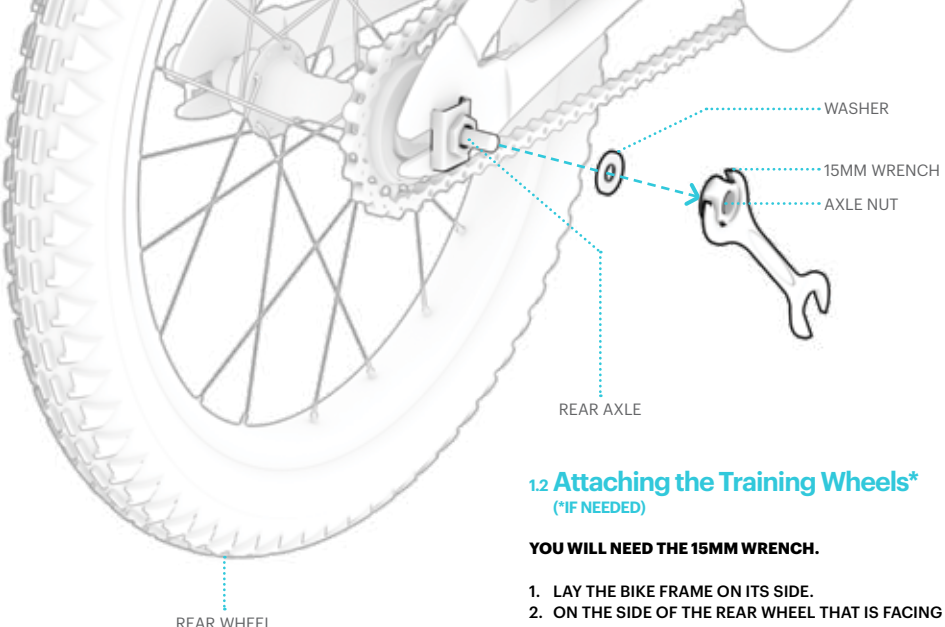

1.2 Attaching the Training Wheels*
(*IF NEEDED)

YOU WILL NEED THE 15MM WRENCH.

1. **LAY THE BIKE FRAME ON ITS SIDE.**
2. **ON THE SIDE OF THE REAR WHEEL THAT IS FACING UPWARDS, LOOSEN AND REMOVE THE AXLE NUT BY TURNING IT COUNTERCLOCKWISE WITH YOUR FINGERS OR THE 15MM WRENCH.**
3. **REMOVE THE WASHER UNDERNEATH THE AXLE NUT BUT DO NOT REMOVE THE SILVER PLATE UNDERNEATH THE WASHER. SET THE NUT AND WASHER ASIDE.**

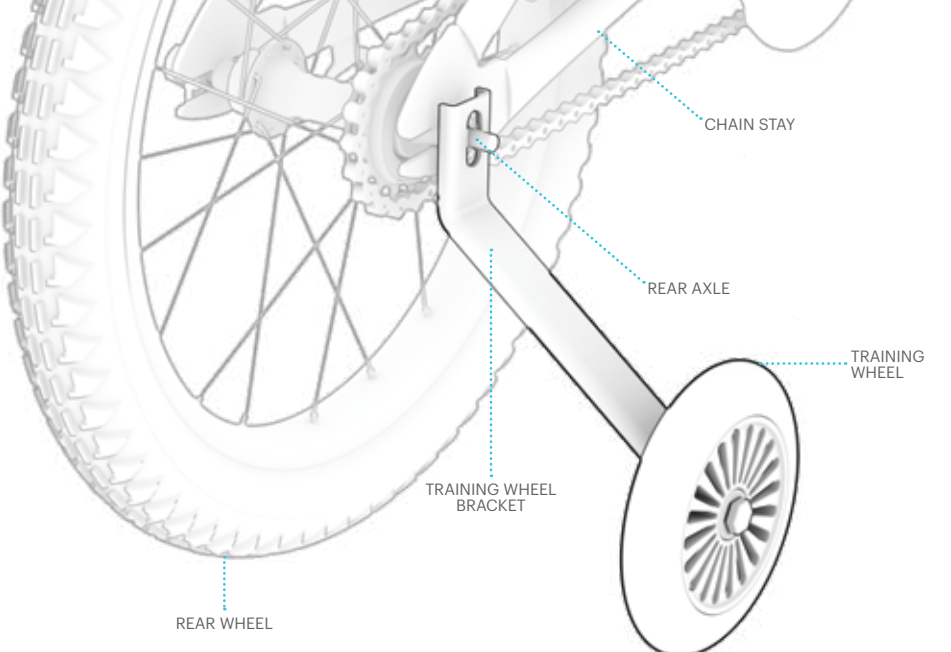

4. **SLIDE THE HOLE AT THE TOP OF ONE TRAINING WHEEL BRACKET AROUND THE AXLE AND POSITION THE TRAINING WHEEL SUCH THAT THE FOLLOWING CONDITIONS ARE MET:**
   - **THE TRAINING WHEEL BRACKET CURVES OUTWARD—AWAY FROM THE BIKE.**
   - **THE TRAINING WHEEL BRACKET IS PERPENDICULAR TO THE CHAIN STAY.**
   - **THE TRAINING WHEEL IS POSITIONED NEAR THE BOTTOM OF THE WHEEL.**

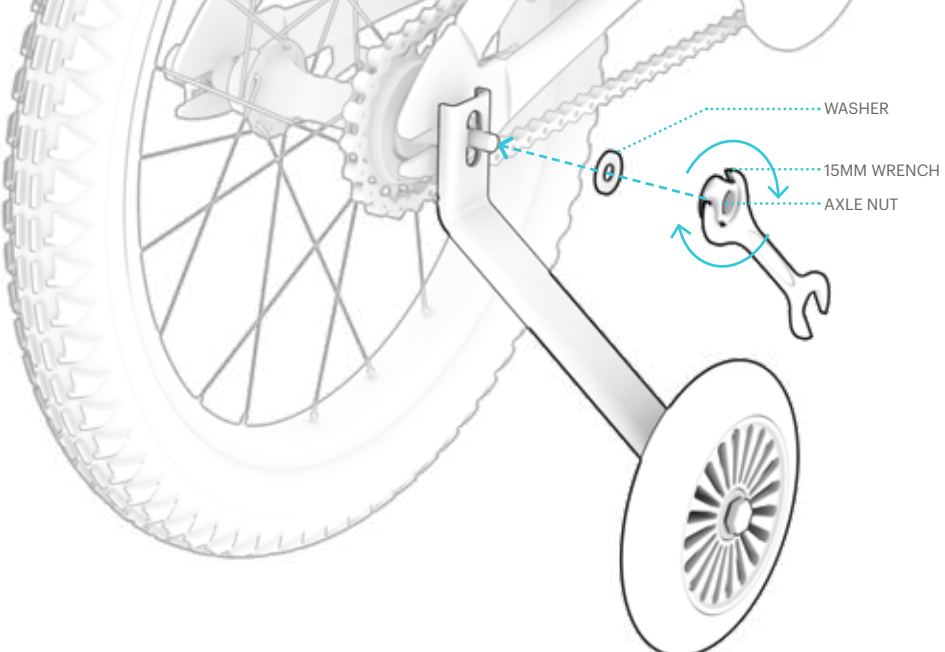

5. **SLIDE THE WASHER ONTO THE AXLE AND THEN FINGER-TWIST THE AXLE NUT CLOCKWISE ONTO THE AXLE.**
6. **TIGHTEN THE AXLE NUT WITH THE 15MM WRENCH.**
7. **FLIP THE BIKE FRAME OVER AND REPEAT STEPS 2 – 6 ON THE OTHER SIDE WITH THE OTHER TRAINING WHEEL.**

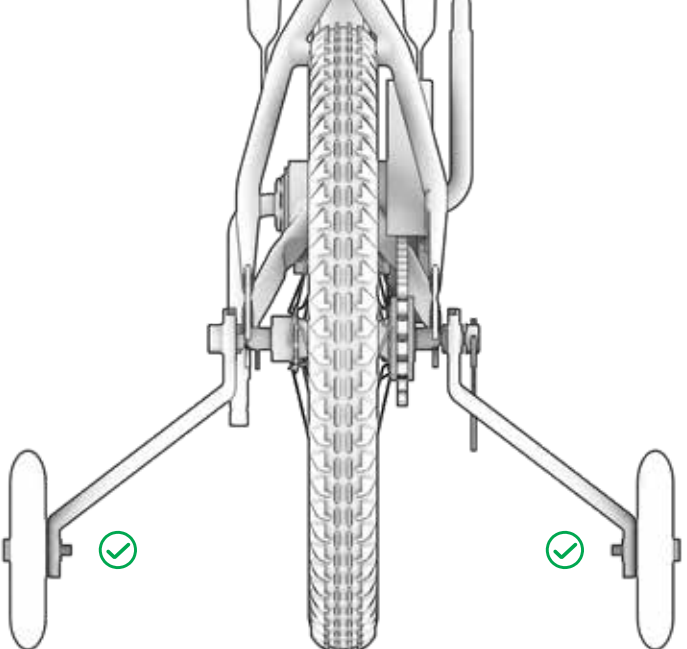

8. **CHECK THAT THE TRAINING WHEELS ARE SECURE.**

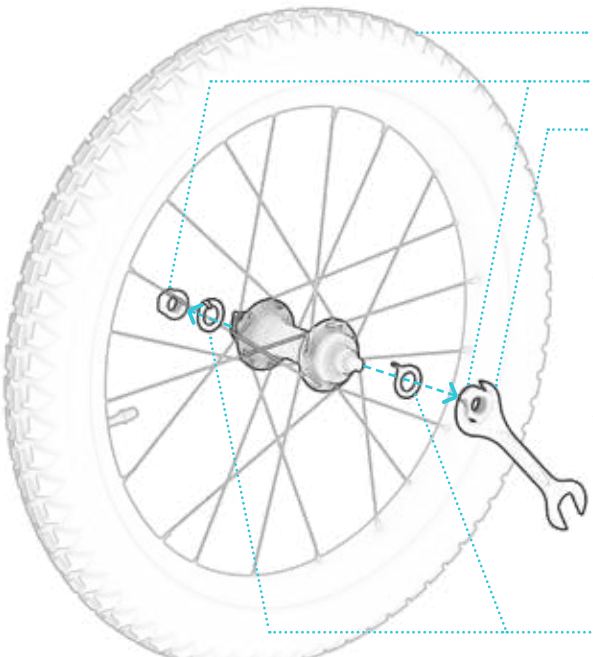

1.3 Attaching the Front Wheel

YOU WILL NEED THE 15MM WRENCH.

1. **LOOSEN AND REMOVE THE AXLE NUTS FROM BOTH SIDES OF THE FRONT WHEEL BY TURNING EACH COUNTERCLOCKWISE WITH YOUR FINGERS OR THE 15MM WRENCH.**
2. **REMOVE THE WASHERS FROM BOTH SIDES OF THE AXLE AND SET THEM ASIDE WITH THE AXLE NUTS.**
3. **LOCATE THE ARROW ON THE FRONT TIRE INDICATING THE DIRECTION OF PROPER ROTATION FOR THE TIRE.**

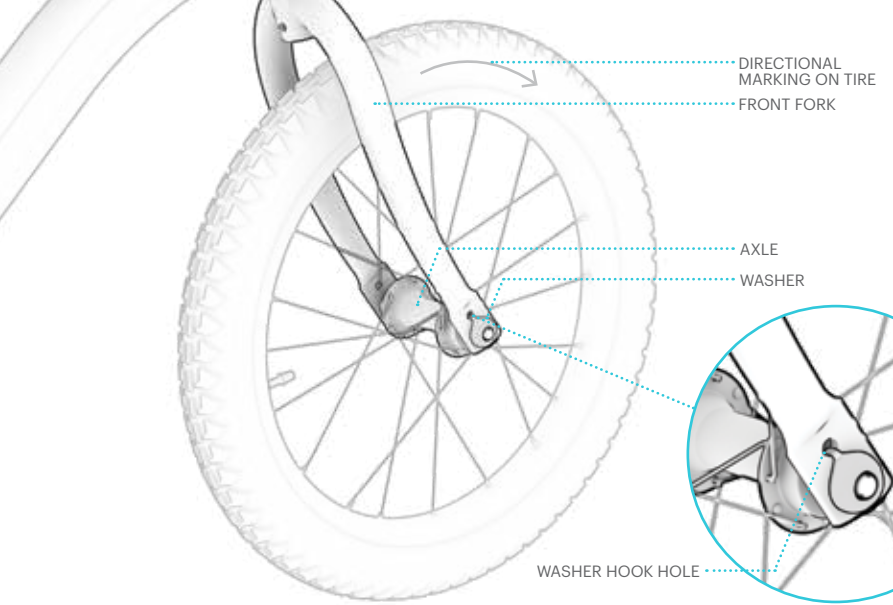

4. **LIFT THE BIKE UPRIGHT AND ROTATE THE FRONT FORK SO THAT ONE FORK LEG IS ON THE LEFT SIDE AND ONE FORK LEG IS ON THE RIGHT SIDE OF THE BIKE.**
5. **PROP THE BIKE UPRIGHT SO THAT IT IS RESTING ON THE REAR WHEEL, TRAINING WHEELS, AND FRONT FORK.**
6. **CAREFULLY LIFT THE FRONT OF THE BIKE FRAME UP. SIDE THE FRONT WHEEL IN BETWEEN THE LEGS OF THE FRONT FORK SO THAT THE ROTATION ARROW IS AT THE TOP OF THE WHEEL AND POINTED FORWARD.**
7. **PLACE ONE OF THE REMOVED WASHERS ONTO EACH END OF THE AXLE WITH THE HOOK CURVED INWARD AND ALIGNED WITH THE WASHER HOOK HOLE IN THE FORK LEG. PUSH THE HOOK INTO THE HOLE.**

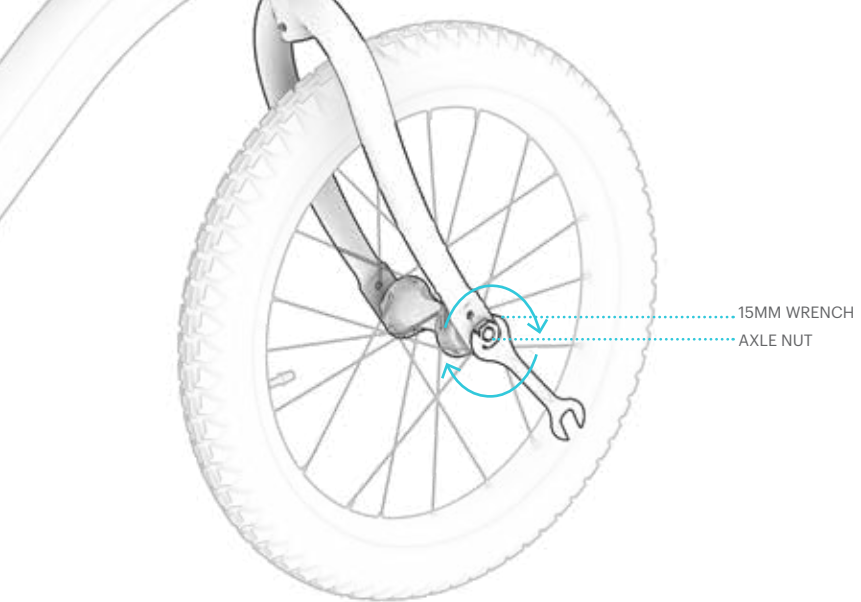

8. FINGER-TWIST AN AXLE NUT CLOCKWISE ONTO EACH SIDE OF THE AXLE.
9. TIGHTEN THE AXLE NUTS WITH THE 15MM WRENCH.
10. CHECK THAT THE WHEEL IS SECURE AND SPINS FREELY IN THE FORK.

IMPORTANT: AN UNSECURED WHEEL CAN LOOSEN OR FALL OFF, PUTTING THE RIDER AT RISK OF SERIOUS INJURY. ENSURE THAT THE AXLE IS SECURE IN THE FORK AND THAT THE AXLE NUTS ARE TIGHT.

1.4 Installing the Handlebar

YOU WILL NEED THE 13MM WRENCH.

1. LOOSEN THE CAP BOLT ON THE TOP OF THE HANDLEBAR BY TURNING IT COUNTERCLOCKWISE FOR 1-2 ROTATIONS WITH THE 13MM WRENCH.
2. POSITION THE HANDLEBAR ABOVE THE HEAD TUBE WITH THE HANDLEBAR POST IN LINE WITH THE STEM AND THE BELL ON THE RIGHT SIDE OF THE BIKE.
3. SQUEEZING AND MANIPULATING THE WEDGE NUT SO THAT IT FITS INTO THE HEAD TUBE, SLIDE THE HANDLEBAR POST ALL THE WAY INTO THE HEAD TUBE.
   NOTE: IF THE WEDGE NUT DOES NOT FIT INSIDE THE HOLE OF THE HEAD TUBE, YOU MAY NEED TO LOOSEN THE CAP BOLT FURTHER.

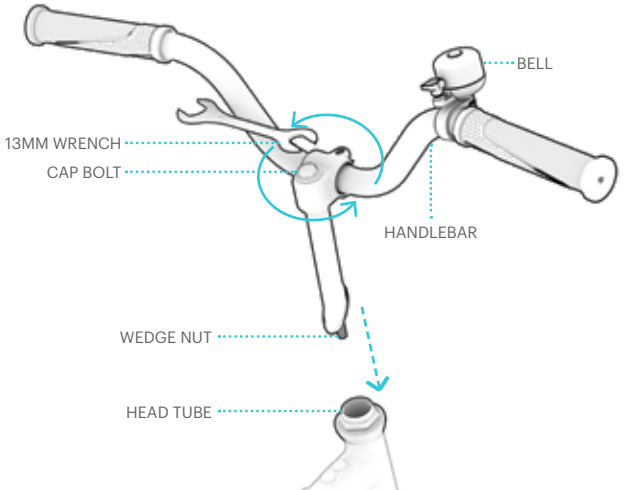

4. **CHECK THAT THE HANDLEBAR AND FRONT FORK ARE ALIGNED, SUCH THAT WHEN THE WHEEL IS POINTED FORWARD AND THE HANDLEBAR IS STRAIGHT ACROSS THE BIKE. IF NECESSARY, MAKE ROTATIONAL ADJUSTMENTS ON EITHER THE HANDLEBAR OR THE FORK UNTIL BOTH PIECES ARE STRAIGHT AND ALIGNED.**
5. **POSITION AND HOLD THE HANDLEBAR AT THE DESIRED HEIGHT.**
   IMPORTANT: NEVER RAISE THE HANDLEBAR SUCH THAT THE WEDGE NUT IS VISIBLE ABOVE THE HEAD TUBE.

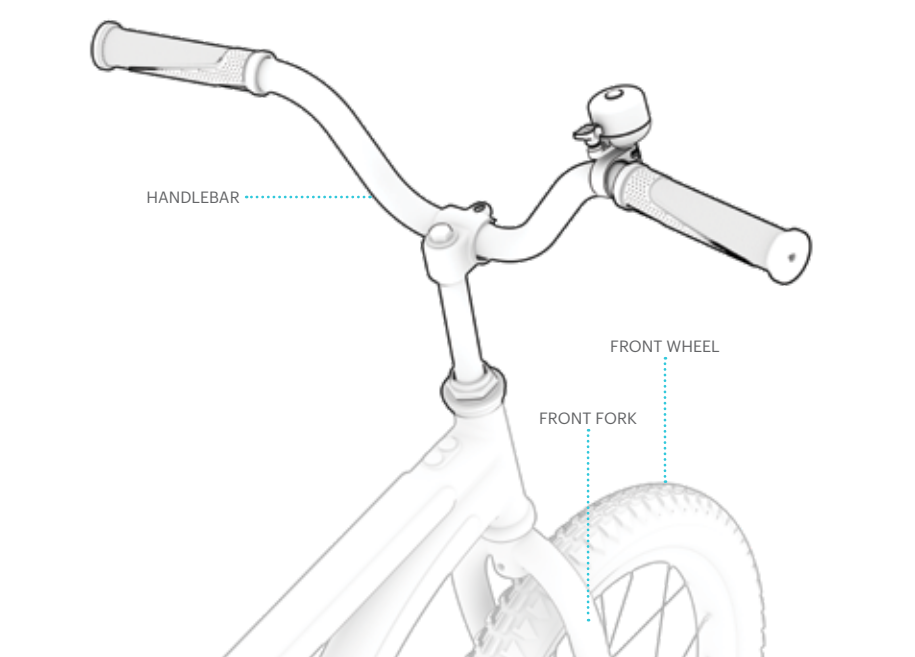

6. **TIGHTEN THE CAP NUT BY TURNING IT CLOCKWISE WITH THE WRENCH.**
7. **CHECK THAT THE HANDLEBAR IS SECURE AND THAT THE FRONT WHEEL TURNS LEFT OR RIGHT IN ACCORDANCE WITH THE ROTATION OF THE HANDLEBAR.**

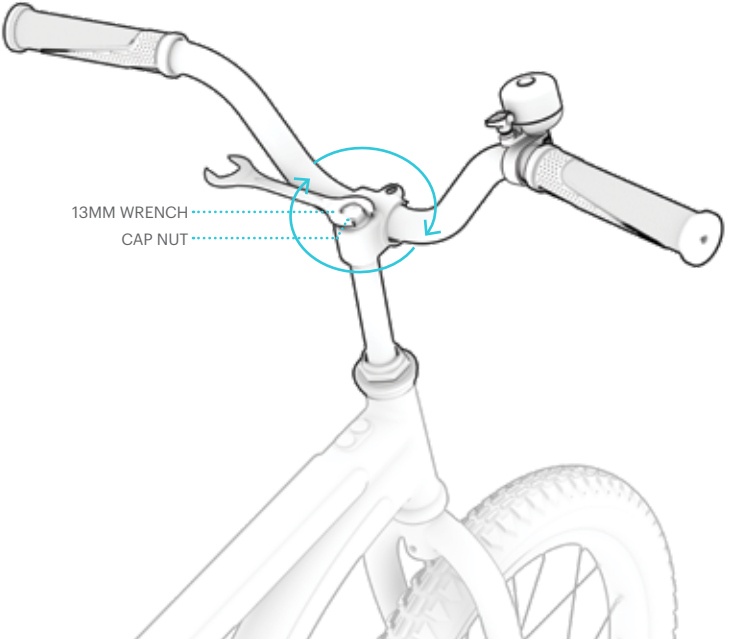

1.5 Attaching the Seat

1. **PULL OPEN THE LATCH ON THE SEAT CLAMP.**
2. **LOCATE THE "MINIMUM INSERTION" MARK ENGRAVED NEAR THE BOTTOM OF THE SEAT POST. LOWER THE SEAT POST THROUGH THE CLAMP AND INTO THE SEAT TUBE. (IF THE CLAMP OPENING IS TOO NARROW TO RECEIVE THE POST, YOU CAN WIDEN IT BY TURNING THE KNOB COUNTERCLOCKWISE WHILE HOLDING THE LATCH STEADY.)**
3. **SLIDE THE SEAT POST DOWN AT LEAST UNTIL THE "MINIMUM INSERTION" MARK IS NO LONGER VISIBLE. ADJUST THE SEAT HEIGHT TO RIDER'S COMFORT AND ROTATE IT SO THAT THE NARROW END IS AT THE FRONT, IN LINE WITH THE FRAME.**

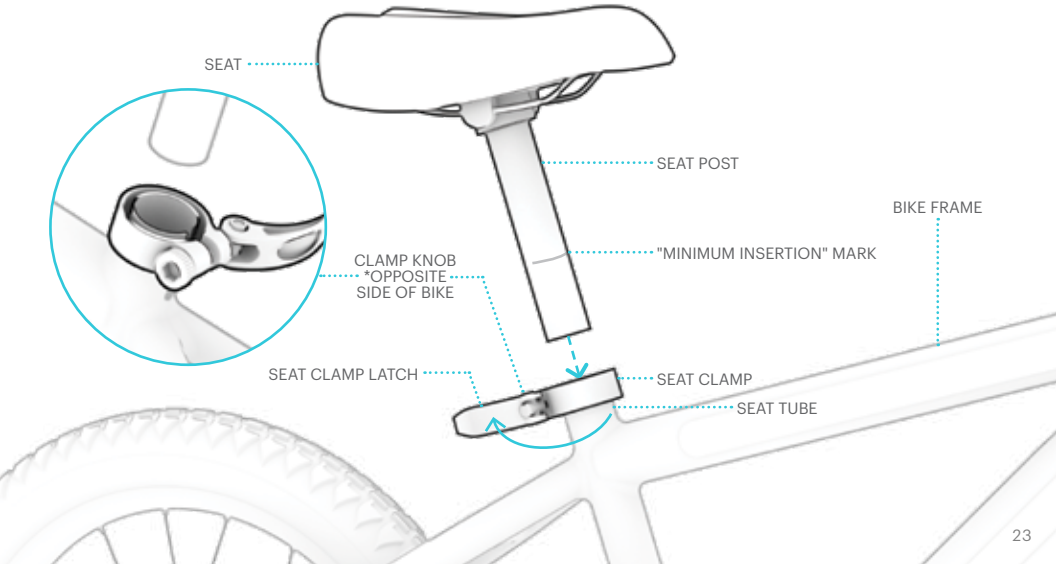

4. CLOSE THE LATCH ON THE SEAT CLAMP.

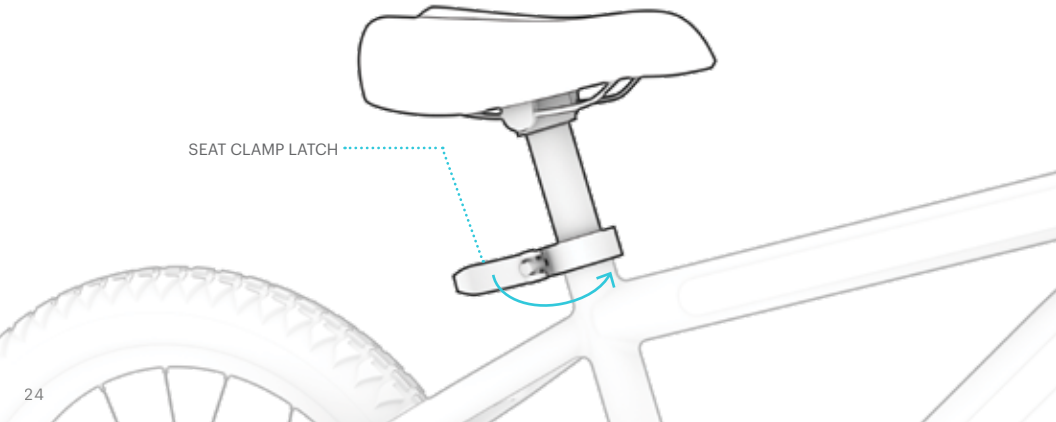

5. **CHECK THAT THE SEAT IS SECURE: USE YOUR HAND TO PUT DOWNWARD PRESSURE ON THE SEAT. IF THE SEAT POST SLIPS FURTHER DOWN INTO THE TUBE, BRING IT BACK TO POSITION AND TIGHTEN THE CLAMP BY TURNING THE KNOB CLOCKWISE.**

NOTE: IF YOU CANNOT OPEN OR CLOSE THE CLAMP LATCH, THE CLAMP KNOB MAY BE TOO TIGHT. LOOSEN THE KNOB BY TURNING IT COUNTERCLOCKWISE.

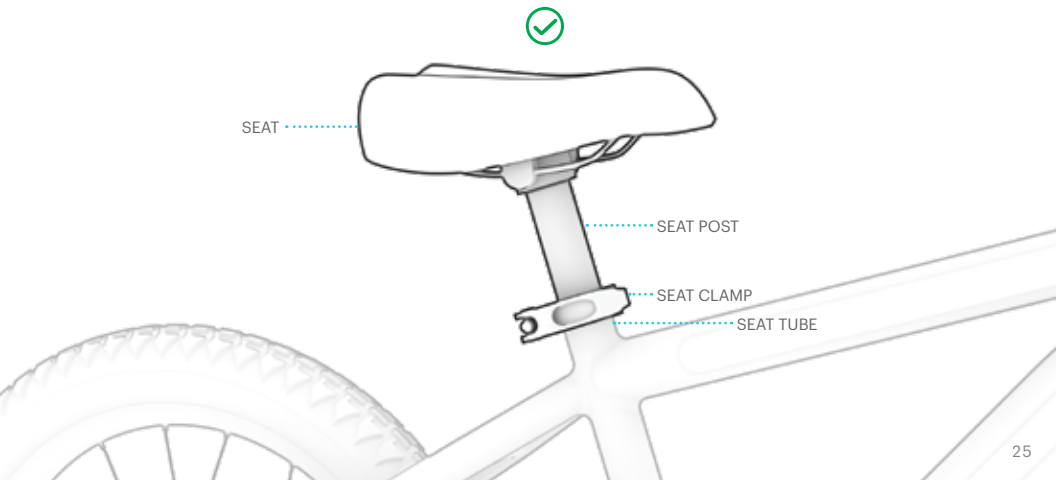

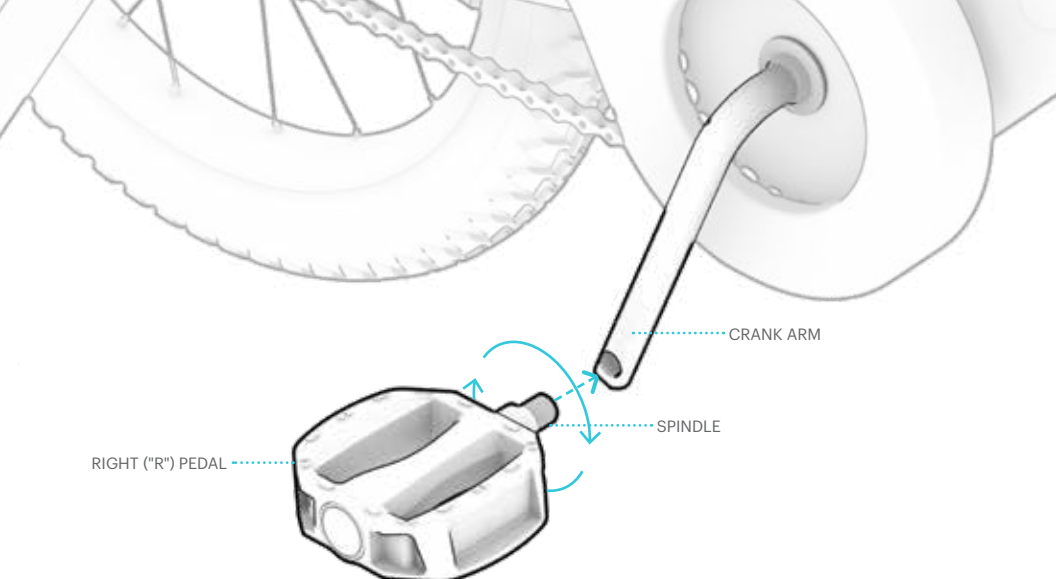

1.6 Attaching the Pedals

YOU WILL NEED THE 15MM WRENCH.

1. NOTE THE "R" AND "L" MARKINGS ON THE END OF SPINDLE OF EACH PEDAL, INDICATING "RIGHT" AND "LEFT."
2. ALIGN THE SPINDLE ON "R" PEDAL WITH THE HOLE AT THE END OF THE CRANK ARM ON THE SIDE OF THE BIKE WHERE YOU WILL PEDAL WITH YOUR RIGHT FOOT.
3. HOLD THE PEDAL BASE STEADY AND, TAKING CARE THAT THE SPINDLE ENTERS THE HOLE STRAIGHT, USE YOUR OTHER HAND TO TWIST THE SPINDLE CLOCKWISE INTO THE HOLE FOR A FEW ROTATIONS.

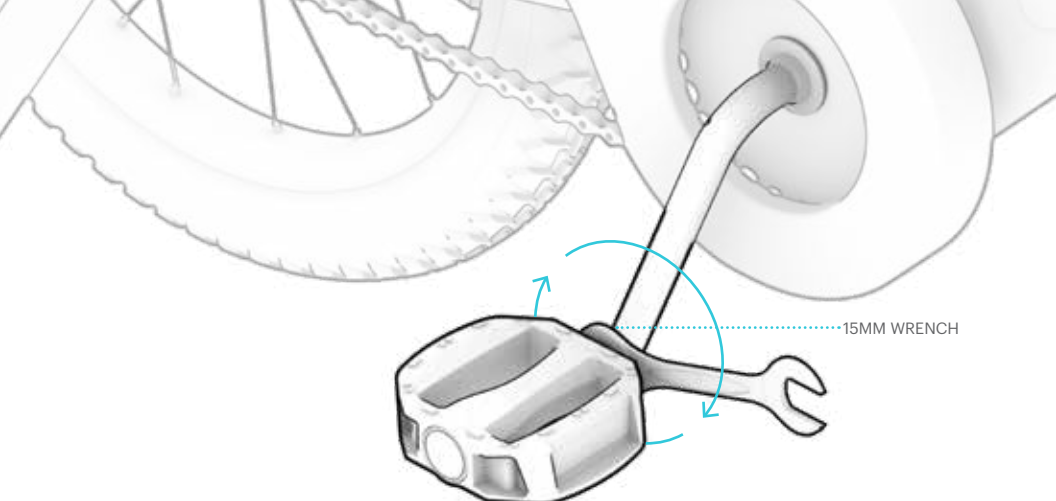

4. FINISH INSERTING AND THEN TIGHTENING THE PEDAL INTO THE CRANK ARM BY TURNING IT CLOCKWISE WITH THE 15MM WRENCH. CHECK THAT THE RIGHT PEDAL IS SECURE.
5. REPEAT STEPS 2-4 WITH THE LEFT ("L") PEDAL.
   IMPORTANT: THE SPINDLE ON THIS PEDAL IS REVERSE THREADED AND NEEDS TO BE INSERTED AND TIGHTENED WITH COUNTERCLOCKWISE TURNS.

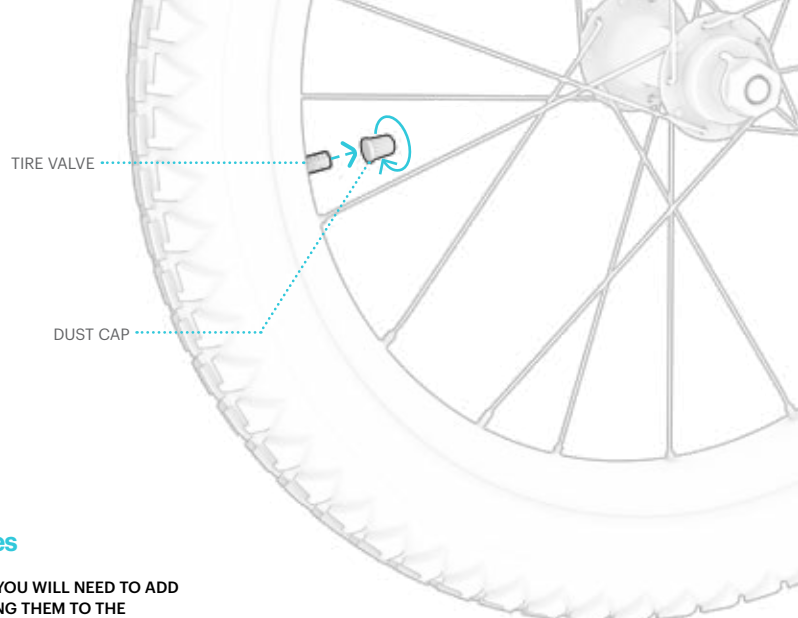

1.7 Inflating the Tires

BEFORE YOUR FIRST RIDE, YOU WILL NEED TO ADD AIR TO YOUR TIRES TO BRING THEM TO THE RECOMMENDED PRESSURE OF 36 - 40 PSI (POUNDS PER SQUARE INCH). USE A GAUGE TO CHECK THAT THE TIRE PRESSURE IS BETWEEN 36 AND 40 PSI PRIOR TO EVERY RIDE.

TO ADD AIR:

1. **REMOVE THE DUST CAP BY FINGER-TWISTING IT OFF COUNTERCLOCKWISE. SET THE CAP ASIDE.**

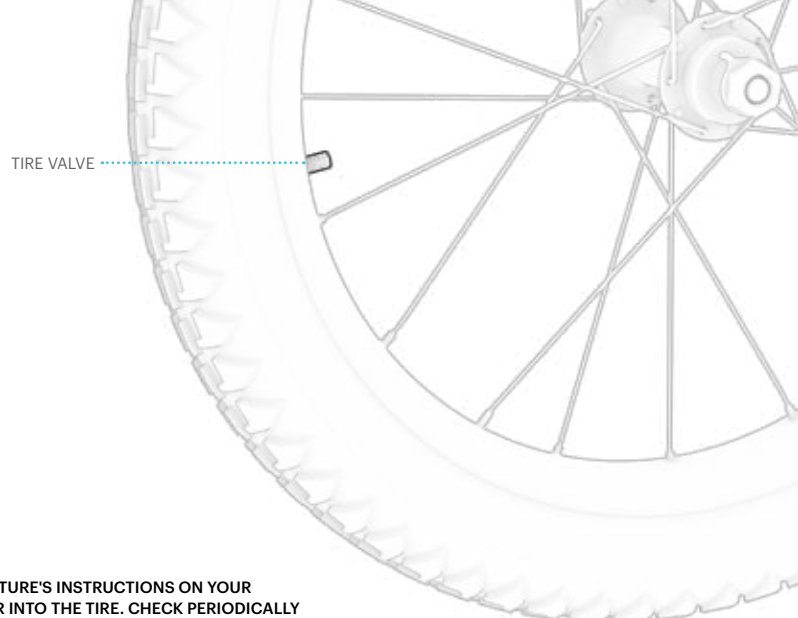

2. **FOLLOW THE MANUFACTURE'S INSTRUCTIONS ON YOUR AIR PUMP TO INSERT AIR INTO THE TIRE. CHECK PERIODICALLY WITH A GAUGE AND CONTINUE ADDING AIR UNTIL YOU REACH 36 PSI. IMPORTANT: ONLY USE A MANUAL AIR PUMP TO INFLATE THE TIRES ON YOUR BIKE. NEVER USE AN AIR COMPRESSOR; DOING SO MAY CAUSE THE TIRE TUBES TO POP.**

3. **REMOVE THE AIR PUMP FROM THE VALVE.**

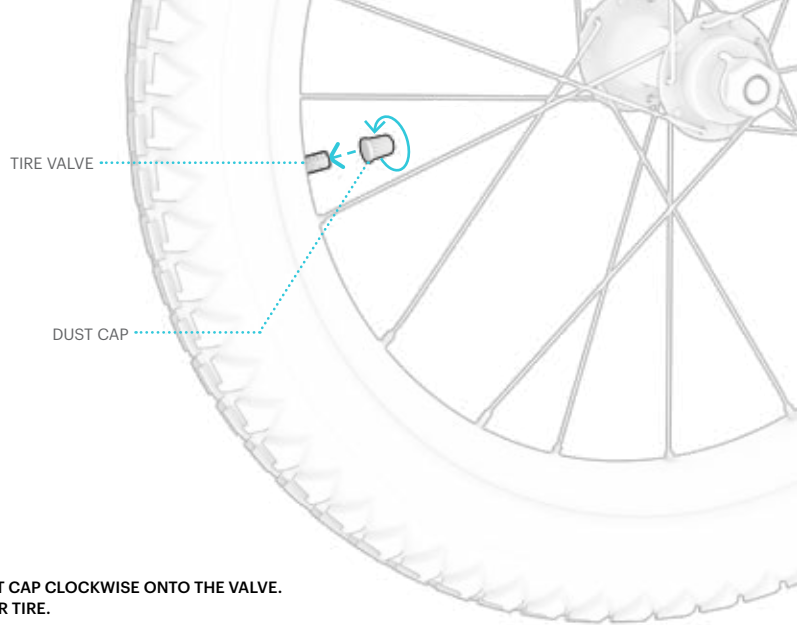

4. **FINGER-TWIST THE DUST CAP CLOCKWISE ONTO THE VALVE.**
5. **REPEAT WITH THE OTHER TIRE.**

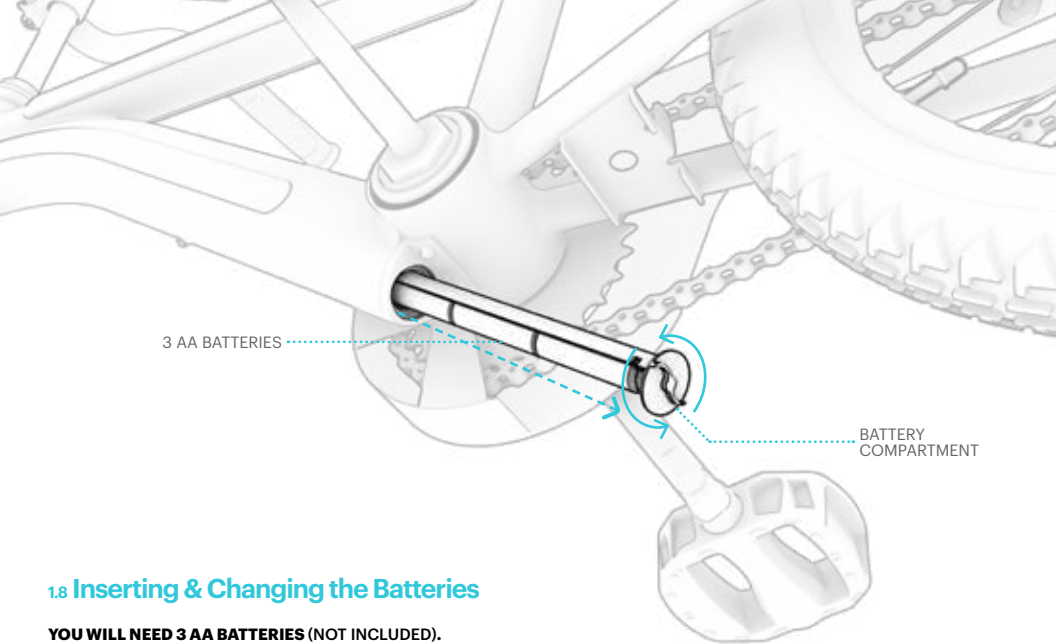

1.8 Inserting & Changing the Batteries

YOU WILL NEED 3 AA BATTERIES (NOT INCLUDED)**.**

1. **TO UNLOCK THE BATTERY COMPARTMENT, GENTLY PUSH THE END OF IT AND TURN IT COUNTERCLOCKWISE.**
2. **PULL THE BATTERY COMPARTMENT OUT FROM THE FRAME.**
3. **INSERT 3 AA BATTERIES IN THE COMPARTMENT ACCORDING TO THE +/- INDICATORS ON THE INSIDE OF THE COMPARTMENT.**

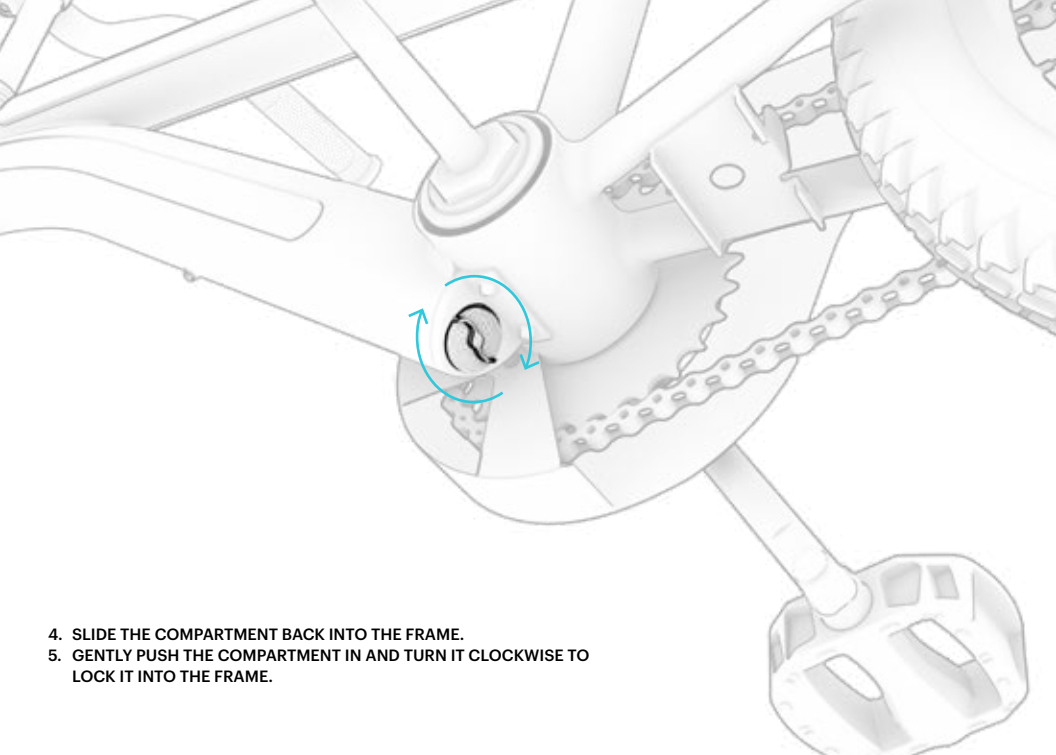

4. SLIDE THE COMPARTMENT BACK INTO THE FRAME.
5. GENTLY PUSH THE COMPARTMENT IN AND TURN IT CLOCKWISE TO LOCK IT INTO THE FRAME.

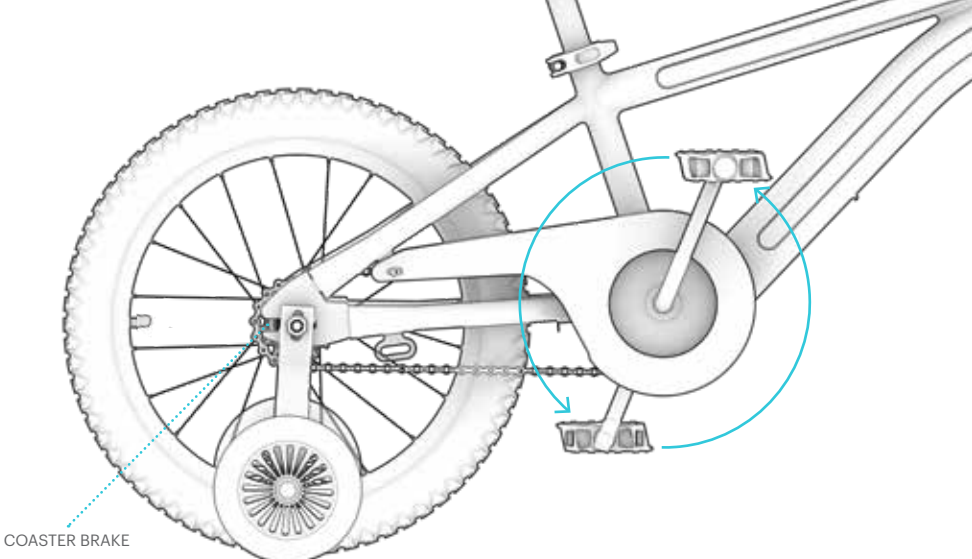

2. Features & Functions

2.1 Using the Brake

THE COASTER BRAKE IS ON THE REAR WHEEL.

TO ENGAGE THE COASTER BRAKE, PEDAL BACKWARDS TO SLOW DOWN. A QUICKER REVERSE PEDALING ACTION WILL BRING YOU TO A COMPLETE STOP.

2.2 Using the Bell

USE THE BELL AS AN ALERT TO OTHER RIDERS AND PEDESTRIANS.

TO SOUND THE BELL, FLICK DOWN ON THE BELL TAB QUICKLY AND FORCEFULLY WITH YOUR RIGHT-HAND THUMB.

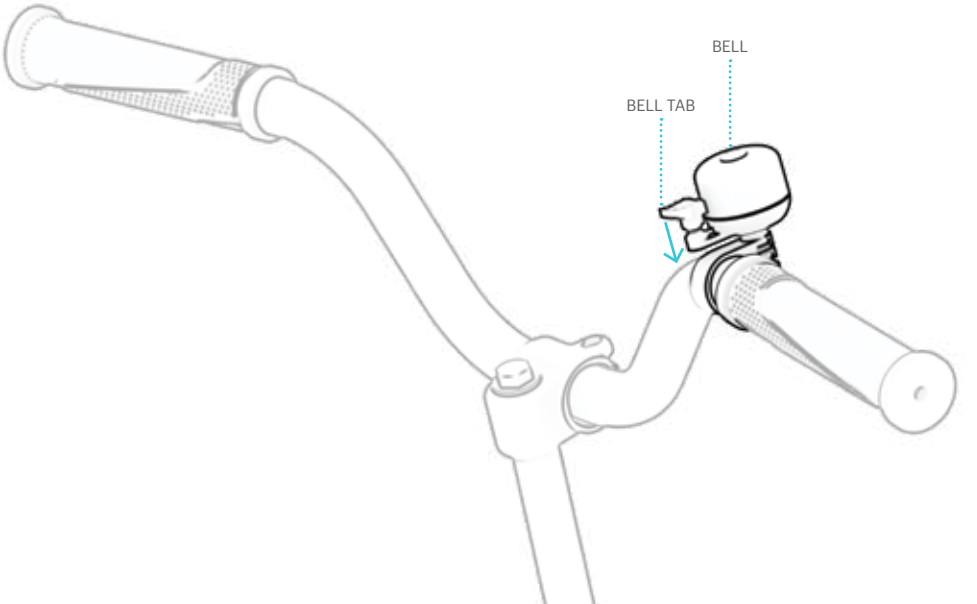

2.3 Using the Lights

FRAME LIGHTS
YOU CAN LIGHT UP YOUR RIDE WITH 4 DIFFERENT LIGHTING PATTERNS AND IN 8 DIFFERENT COLORS (INCLUDING "MULTI").

TO TURN THE LIGHTS ON OR OFF: PRESS AND HOLD THE LIGHTING POWER BUTTON FOR 1-2 SECONDS.

TO CHANGE TO ANOTHER LIGHTING PATTERN (4 TOTAL): PRESS AND HOLD THE MODE BUTTON FOR 3-4 SECONDS.

TO CHANGE TO ANOTHER LIGHT COLOR WITHIN THE PATTERN THAT YOU HAVE SET: QUICK-PRESS THE MODE BUTTON.

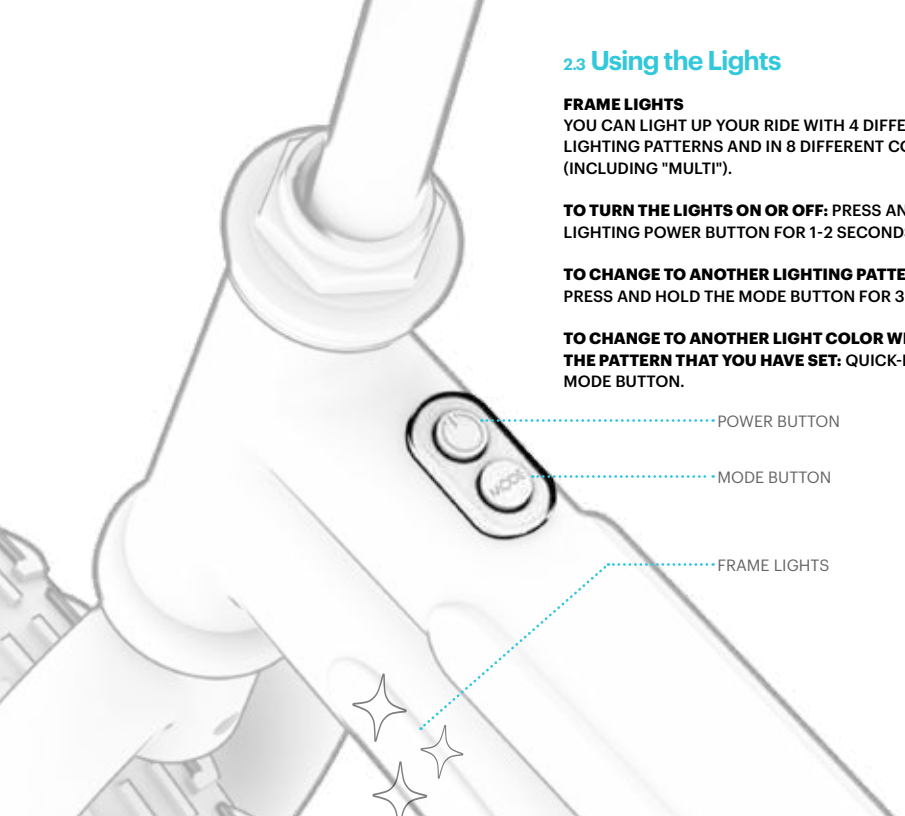

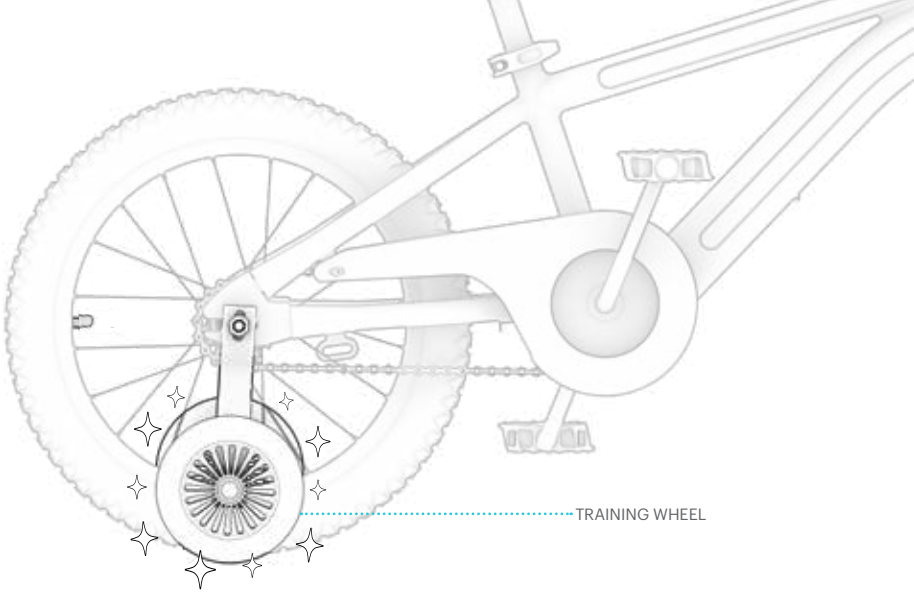

IMPORTANT: ALWAYS REMEMBER TO TURN YOUR LIGHTS OFF AFTER A RIDE.
NOTE: TO PRESERVE BATTERY POWER, THE LIGHTS WILL AUTOMATICALLY TURN OFF 10 MINUTES AFTER THEY HAVE BEEN POWERED ON. TO TURN THE LIGHTS BACK ON AND RE-SET THEM TO YOUR DESIRED PATTERN AND COLOR, FOLLOW THE INSTRUCTIONS ABOVE.

TRAINING WHEEL LIGHTS:
THE LIGHTS IN THE TRAINING WHEELS ARE MOTION ACTIVATED AND WILL LIGHT UP WHENEVER THEY ARE MOVING, REGARDLESS OF WHETHER THE MAIN FRAME LIGHTS ARE BEING USED.

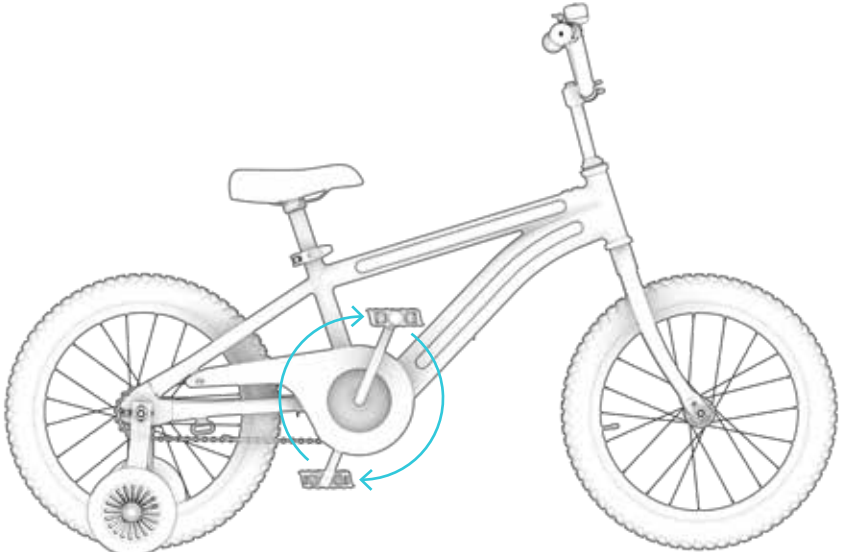

3. Making Moves

3.1 Riding Your Jetson Light Rider

NOW THAT YOU HAVE YOUR JETSON LIGHT RIDER SAFELY ASSEMBLED, IT'S TIME TO RIDE OUT AND LIGHT UP THE WORLD.

3.2 Helmet Safety

A HELMET SHOULD BE WORN BY THE RIDER AT ALL TIMES.



PROPER POSITIONING:
THE FOREHEAD IS COVERED BY THE HELMET.



IMPROPER POSITIONING:
THE FOREHEAD IS EXPOSED.
A FALL COULD RESULT IN SERIOUS INJURY.

* WEAR A HELMET, APPROPRIATE CLOTHING, SHOES, AND SAFETY GEAR. AVOID CLOTHING THAT CAN GET CAUGHT INTO OR UNDER THE WHEELS. CLOSED-TOE, FLAT SHOES ARE RECOMMENDED. WEAR AN ASTM F1492 APPROVED HELMET AND PROTECTIVE GEAR TO PREVENT INJURY IN THE EVENT OF AN ACCIDENT.

Care & Maintenance

CLEANING THE JETSON LIGHT RIDER
- Carefully wipe with a damp cloth, then dry with a dry cloth.
- Do not apply water directly to the Jetson Light Rider. This can cause damage to the frame and electrical systems, which could result in malfunctions that lead to personal injury.

STORING THE JETSON LIGHT RIDER
- Remove batteries before storing.
- Cover to protect against dust.
- Store indoors and in a dry place.

CHAIN ADJUSTMENT
The chain must remain on the sprockets. If the chain comes off the sprockets, the coaster brake will not operate.

ADJUSTMENT:
- The chain must be at the correct tightness.
- If too tight, the bicycle will be difficult to pedal.
- If too loose, the chain can come off the sprockets.

When the chain (C) is at the correct tightness, the crank can rotate freely and the chain can be pulled no more than one-half inch (A) away from a straightedge (B), as shown.
To adjust the chain:
- Loosen the axle nuts of the rear wheel.
- Move the rear wheel forward or backward as necessary.
- Hold the wheel in the desired position and tighten the axle nuts.

IMPORTANT: Make sure the rear wheel is centered under the bicycle frame.

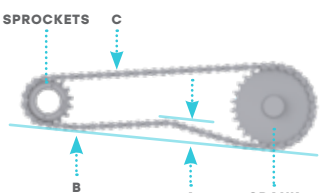

⚠WARNING:
Do not attempt to repair a broken chain. If your chain breaks, bring your bicycle to a bicycle service shop.

Stay connected.

Be sure to follow **@ridejetson**
on social media to learn about fantastic offers,
giveaways, and all the latest Jetson news.

Loving your ride?

Then be sure to leave a review at ridejetson.com/reviews.
We can't wait to hear from you!

JETSON

#MakeMoves

Questions? Let us know.

ridejetson.com/support
ridejetson.com/chat

To exercise your product's warranty or inquire about warranty coverage, contact us directly.

1-844-585-7462

Manufactured in Zhejiang, China
Imported by TruRide Tech LLC.
PO Box 461, Jersey City, NJ 07302-9998

www.ridejetson.com



Made in China
Date Code: 07/2025
Document Edition: v3.1

© 2025, TruRide Tech. ALL RIGHTS RESERVED. Manufactured for TruRide Tech LLC.
JETSON® is a registered trademark used under license from JetStream Brands LLC. No portion of this document, including shape, graphics, and design, may be reproduced or transmitted in any form or by any means.