JETSON

Jupiter Jumbo
Light-Up Kick Scooter.

A guide for your ride.

IMPORTANT: READ CAREFULLY AND RETAIN FOR FUTURE REFERENCE.

MODELS: JJUPBW-BLK | JJUPBW-BLU | JJUPBW-RED

Designed in Brooklyn | Made in China

SOMETHING
IS NOT

Jetson's top two riding rules:
Be safe. Have fun!

Table of Contents

Safety Warnings 4
Product Overview 6
Specs & Features 8
Unfolding/Folding the Jupiter Jumbo 9
Assembly 12
Adjusting the Handlebar 13
Inserting the Batteries 15
Using the Brake 16
Helmet Safety 17
Riding the Jupiter Jumbo 18
Using the LED Lights 19
Care, Maintenance, & Warranty 20

Safety Warnings

- Before use, please read the user manual and safety warnings carefully, and make sure you understand and accept all the safety instructions. The user will be responsible for any loss or damage caused by improper use.
- Before each cycle of operation, the operator shall perform the preoperation checks specified by the manufacturer: That all guards and pads originally supplied by the manufacturer are in proper place and in serviceable condition; That the braking system is functioning properly; That any and all axle guards, chain guards, or other covers or guards supplied by the manufacturer are in place and in serviceable condition; That tires are in good condition, inflated properly, and have sufficient tread remaining; The area that the product is to be operated should be safe and suitable for safe operation.
- Components shall be maintained and repaired in accordance with the manufacturer's specifications and using only the manufacturer's authorized replacement parts with installation performed by dealers or other skilled persons.
- Warning against recharging non-rechargeable batteries.
- Don't allow hands, feet, hair, body parts, clothing, or similar articles to come in contact with moving parts, wheels, or drive train, while the motor is running.
- This product should not be used by children or persons with reduced physical, sensory or mental capabilities, or lack of experience and knowledge, unless they have been given supervision or instruction (IEC 60335-1/A2:2006).
- Unsupervised children should not play with the product (IEC 60335-1/A2:2006).
- Adult supervision is required.
- The rider should not exceed 165 lb.
- Units shall not be operated to perform racing, stunt riding, or other maneuvers, which may cause loss of control, or may cause uncontrolled operator/passenger actions or reactions.
- Never use near motor vehicles.
- Avoid sharp bumps, drainage grates, and sudden surface changes. Scooter may suddenly stop.
- Avoid streets and surfaces with water, sand, gravel, dirt, leaves, and other debris. Wet weather impairs traction, braking, and visibility.
- Avoid riding around flammable gas, steam, liquid, or dust that could cause fire.
- Operators shall adhere to all of the manufacturer's recommendations and instructions, as well as comply with all laws and ordinances: Units without headlights shall be operated only with adequate daylight conditions of visibility, and; Owners shall be encouraged to highlight (for conspicuity) using lighting, reflectors, and for low-riding units, signal flags on flexible poles.
- Persons with the following conditions shall be cautioned not to operate: Those with heart conditions; Pregnant women; Persons with head, back, or neck ailments, or prior surgeries to those areas of the body; and persons with any mental or physical conditions that may make them susceptible to injury or impair their physical dexterity or mental capabilities to recognize, understand, and perform all of the safety instructions and to be able to assume the hazards inherent in unit use.
- Do not ride at night.
- Do not ride after drinking or taking prescription medication.
- Do not carry items when riding.
- Never operate the product barefooted.
- Always wear shoes and keep shoelaces tied.
- Make sure your feet are always placed securely on the deck.

- Operators always shall use appropriate protective clothing, including but not limited to a helmet, with appropriate certification, and any other equipment recommended by the manufacturer: Always wear protective equipment such as helmet, knee pads, and elbow pads.
- Always give way to pedestrians.
- Be alert to things in front and far away from you.
- Do not allow distractions when riding, such as answering the phone or engaging in any other activities.
- The product cannot be ridden by more than one person.
- When you ride the product along with other riders, always keep a safe distance to avoid a collision.
- When turning, be sure to maintain your balance.
- Riding with improperly adjusted brakes is dangerous and can result in serious injury or death.
- The brake may become hot while operating, do not touch the brake with your bare skin.
- Applying brakes too hard or too suddenly can lock up a wheel, which could cause you to lose control and fall. Sudden or excessive application of the brake may result in injury or death.
- If the brake loosens, please adjust with the Jupiter Jumboagon wrench, or please contact the Jetson Care Team.
- Replace worn or broken parts immediately.
- Check whether all safety labels are in place and understood before riding.
- The owner shall allow the use and operation of the unit after a demonstration that such operators can understand and operate all components of the unit before use.
- Do not ride without proper training. Do not ride at high speeds, on uneven terrain, or on slopes. Do not perform stunts or turn abruptly.
- Recommended for indoor use.
- Prolonged exposure to UV rays, rain and the elements may damage the enclosure materials, store indoors when not in use.

California Proposition 65

⚠WARNING:

This product can expose you to a chemical such as Chromium that is known to the state of California to cause cancer or birth defects or other reproductive harm. For more information go to www.p65warnings.ca.gov/product

MODIFICATIONS

Do not attempt to disassemble, modify, repair, or replace the unit or any components of the unit without instruction from the Jetson Care Team. This will void any warranty, and can lead to malfunctions which may cause injury.

ADDITIONAL OPERATION PRECAUTIONS

Do not lift the product off the ground while it is on and the wheels are in motion. This can result in freely spinning wheels, which may cause injury to yourself or others nearby. Do not jump on or off the product, and do not jump while using it. Always keep your feet firmly planted on the foot rest while in operation. Always check the battery charge before using.

Product Overview

1. HANDLEBAR
2. STEM CLAMP
3. STEM (LED LIGHT-UP)
4. FRONT WHEEL
5. FOLDING MECHANISM
6. LOCKING LEVER KNOB
   (LOCKING LEVER LOCATED ON OPPOSITE SIDE)
7. DECK (LED LIGHT-UP)
8. LIGHTING CONTROL BUTTON
9. BATTERY COMPARTMENT
10. REAR FOOT BRAKE
11. REAR WHEEL

HARDWARE INCLUDED:



BOLT
(PRE-ATTACHED)



NUT
(PRE-ATTACHED)



2-BIT PHILLIPS-HEAD
SCREWDRIVER AND ALLEN KEY TOOL

* ADULTS MUST ASSIST CHILDREN IN THE INITIAL ASSEMBLY AND ADJUSTMENT PROCEDURES TO FOLD/UNFOLD PRODUCT AS WELL AS ADJUSTING HANDLEBAR TO HEIGHT.



NOTE: IMAGES MAY NOT REFLECT EXACT APPEARANCE OF ACTUAL PRODUCT.

Specs & Features

- WEIGHT LIMIT: 165 LBS
- PRODUCT WEIGHT: 10 LBS
- RECOMMENDED AGE: 8+
- FOLDED DIMS: 31.5″(L) × 15.7″(W) × 10.5″(H)
- UNFOLDED DIMS: 31.5″(L) × 15.7″(W) × 36″(H)
- HANDLEBAR HEIGHT: 32″ - 36″
- DECK DIMS: 23.6″ × 6″
- WHEEL SIZE: 8″
- 3 AA BATTERIES REQUIRED (NOT INCLUDED)
- 7 LIGHT PATTERNS
- EASY FOLDING MECHANISM

1. Getting Started

1.1 Unfolding/Folding the Jupiter Jumbo

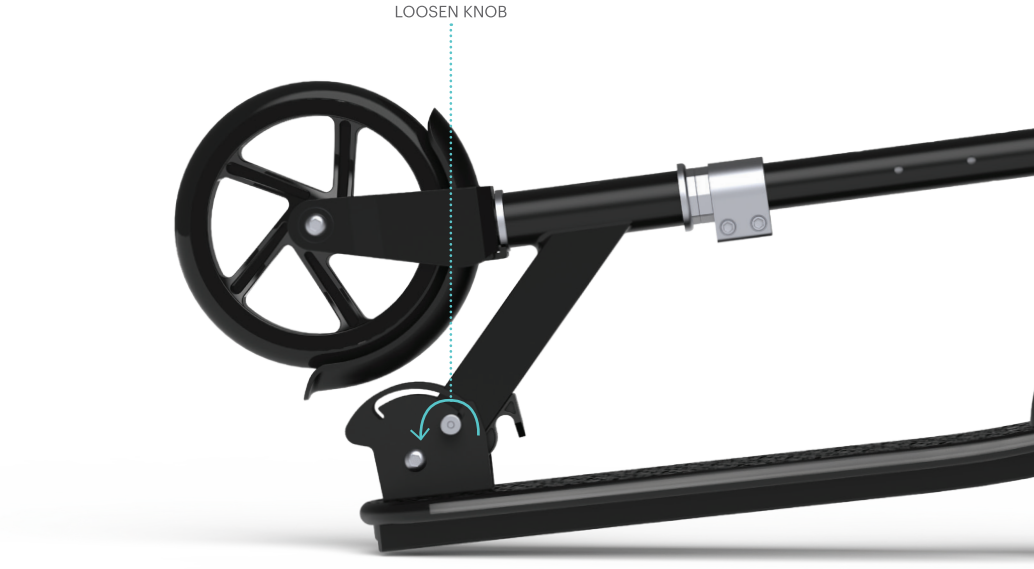

OPEN THE LOCKING LEVER
(LOCATED ON THE OPPOSITE SIDE OF THE KNOB)

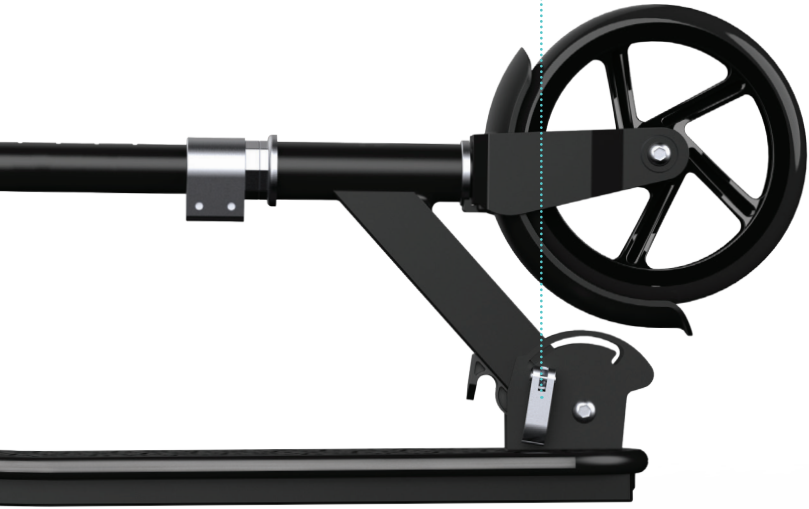

TO UNFOLD:

- WHILE PULLING UP THE FOLDING MECHANISM, RAISE THE STEM UP UNTIL IT "CLICKS" INTO THE UPRIGHT POSITION.
- CLOSE THE LOCKING LEVER AND TIGHTEN THE KNOB.

TO FOLD:

- WHILE PULLING UP THE FOLDING MECHANISM, LOWER THE STEM UNTIL IT "CLICKS" INTO THE FOLDED POSITION.

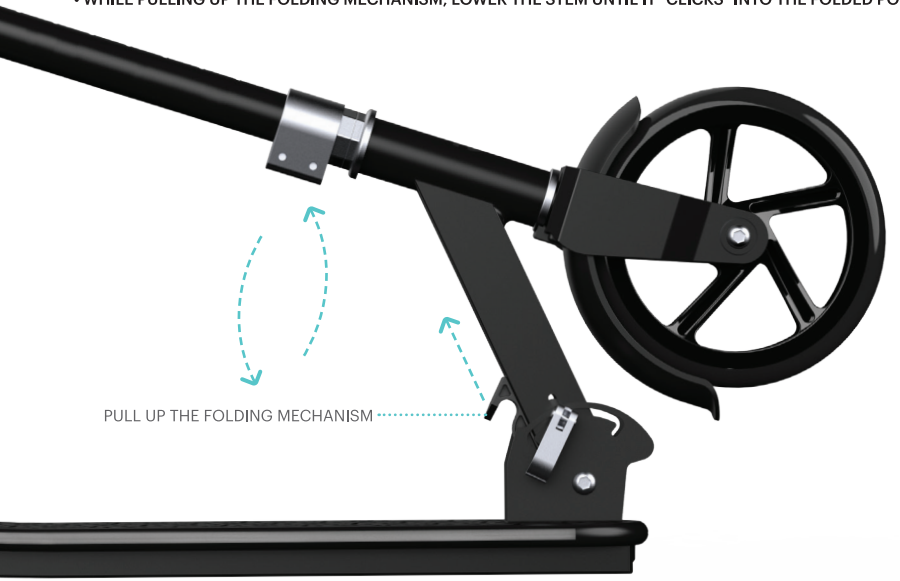

1.2 Assembly

1. USING THE SCREWDRIVER TIP OF THE 2-BIT TOOL, REMOVE THE PRE-ATTACHED BOLT AND NUT FROM THE HANDLEBAR BASE.
2. SLIDE THE HANDLEBAR ONTO THE SCOOTER STEM.
3. PUSH DOWN UNTIL THE PRE-DRILLED HOLES IN THE HANDLEBAR EACH ALIGN WITH A PRE-DRILLED HOLE ON ONE SIDE OF THE STEM.
4. INSERT THE BOLT THROUGH THE HOLE ON THE SIDE OF THE HANDLEBAR ON WHICH YOUR RIGHT HAND WILL GO WHEN RIDING.
5. TWIST THE NUT ONTO THE END OF BOLT AND TIGHTEN THE BOLT USING THE SCREWDRIVER END OF THE 2-BIT TOOL.

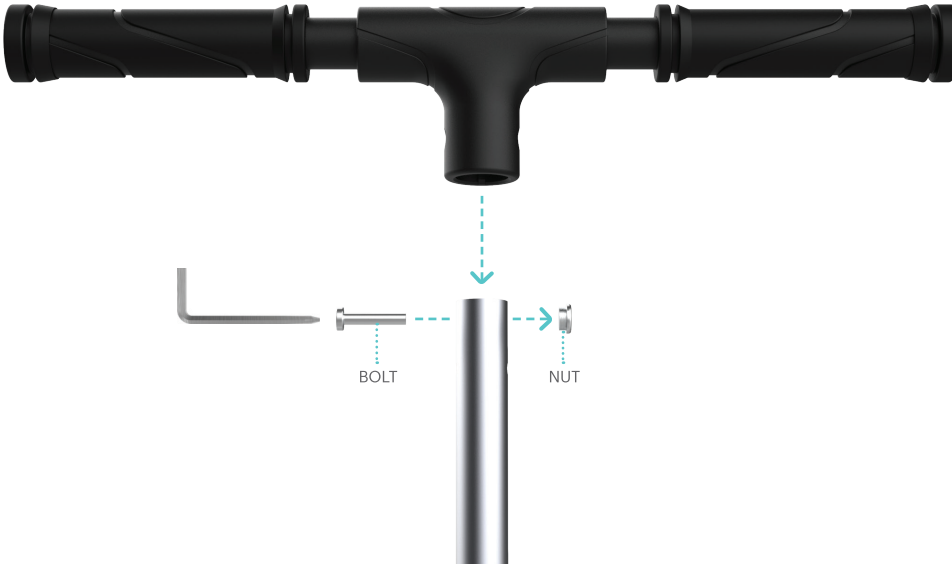

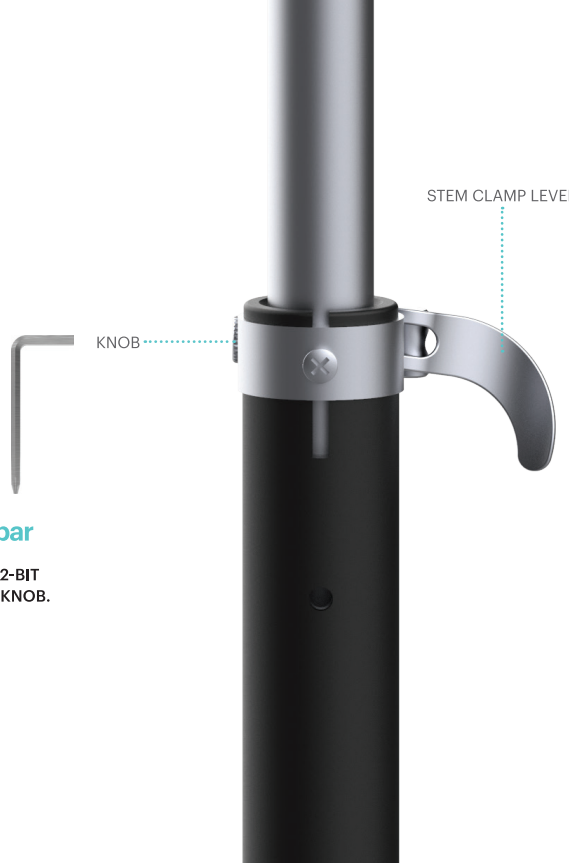

1.3 Adjusting the Handlebar

1. USING THE ALLEN KEY TIP OF THE 2-BIT TOOL, LOOSEN THE STEM CLAMP KNOB.
2. OPEN THE STEM CLAMP LEVER.

3. WHILE PRESSING IN THE STEM PIN, LIFT OR LOWER THE HANDLEBAR.
4. WHEN YOU HEAR THE PIN CLICK INTO ANOTHER HOLE, CLOSE THE STEM CLAMP LEVER AND TIGHTEN THE KNOB WITH THE ALLEN KEY.
5. MAKE SURE THE HANDLEBAR IS SECURE.

CAUTION: THE STEM PIN ALONE WILL NOT KEEP THE STEM SECURE. MAKE SURE THE STEM CLAMP IS ALSO TIGHTENED AND CLOSED PRIOR TO RIDING.

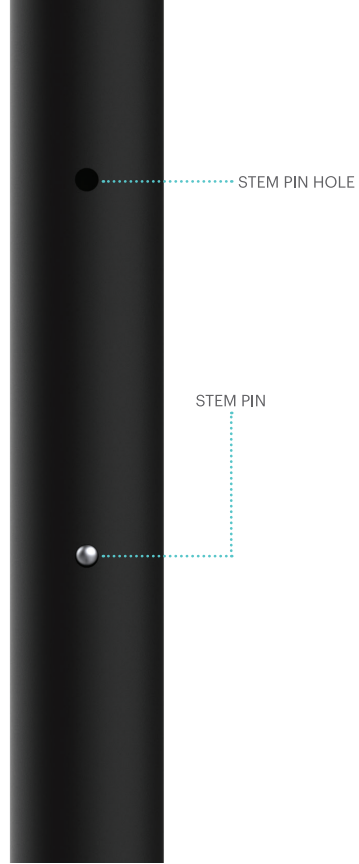

1.4 Inserting the Batteries

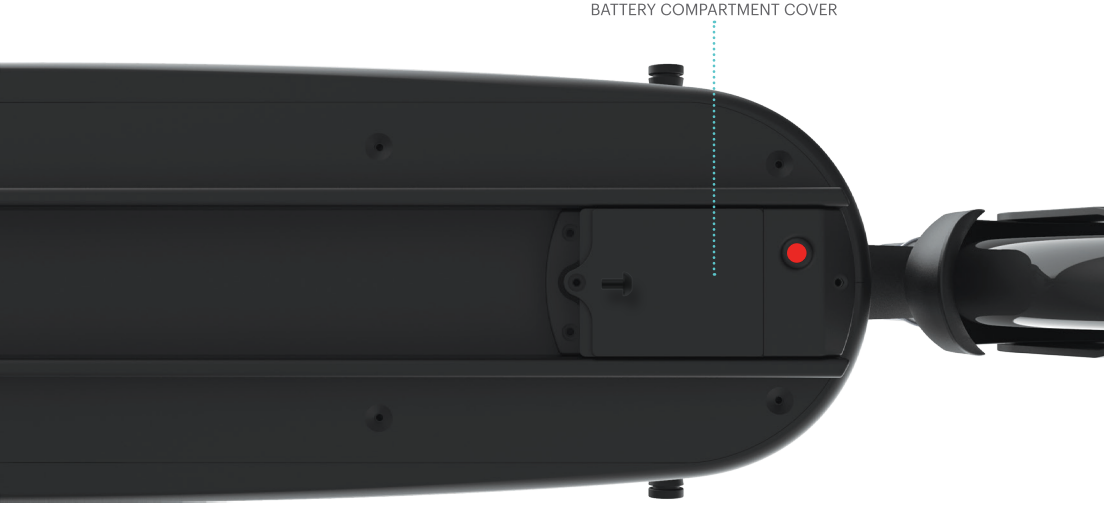

1. OPEN THE BATTERY COMPARTMENT COVER WITH THE SCREWDRIVER END OF THE 2-BIT TOOL.
2. INSERT 3 AA BATTERIES BASED ON THE +/- DIRECTIONS INDICATED IN THE BATTERY COMPARTMENT.
3. SCREW THE COMPARTMENT COVER BACK ON.

1.5 Using the Brake

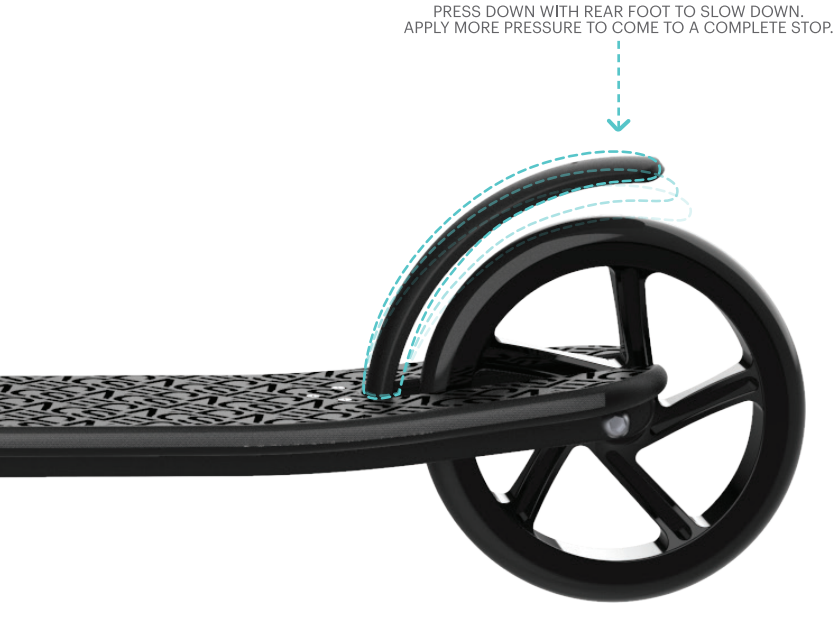

1.6 Helmet Safety



PROPER POSITIONING:
THE FOREHEAD IS COVERED
BY THE HELMET.



IMPROPER POSITIONING:
THE FOREHEAD IS EXPOSED.
A FALL COULD RESULT IN SERIOUS INJURY.

* WEAR A HELMET, APPROPRIATE CLOTHING, SHOES, AND SAFETY GEAR. AVOID CLOTHING THAT CAN GET CAUGHT INTO OR UNDER THE WHEELS. CLOSED-TOE, FLAT SHOES ARE RECOMMENDED. WEAR AN ASTM F1492 APPROVED HELMET AND PROTECTIVE GEAR TO PREVENT INJURY IN THE EVENT OF AN ACCIDENT.

2. Making Moves

2.1 Riding the Jupiter Jumbo

1. PLACE ONE FOOT IN FRONT FACING FORWARD.
2. PLACE THE OTHER FOOT BEHIND IT AT A 70 - 90° ANGLE.
3. USE THE BACK FOOT TO PUSH OFF THE GROUND AND PROPEL THE SCOOTER FORWARD.
4. ROTATE THE HANDLEBAR TO THE LEFT OR RIGHT TO MAKE TURNS.



2.2 Using the LED Lights



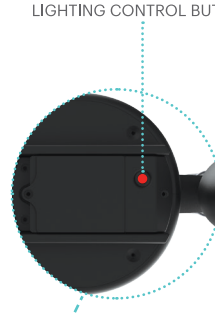

1. QUICK-PRESS THE LIGHTING CONTROL BUTTON TO TURN ON THE LED LIGHTS.
2. QUICK-PRESS THE LIGHTING CONTROL BUTTON AGAIN TO CYCLE THROUGH 7 DIFFERENT LIGHTING STYLES. THE 8TH QUICK-PRESS WILL TURN THE LIGHTS OFF.
3. TO TURN THE LIGHTS OFF WHEN YOU ARE IN ONE OF THE EARLY LIGHTING MODES IN THE CYCLE, HOLD DOWN THE LIGHTING CONTROL BUTTON FOR 3 SECONDS.

IMPORTANT: WHEN YOU'RE DONE RIDING YOUR SCOOTER, REMEMBER TO TURN OFF THE LIGHTS TO PRESERVE BATTERY POWER.

Care, Maintenance, & Warranty

CLEANING
TO CLEAN THE JUPITER JUMBO, CAREFULLY WIPE IT WITH A DAMP CLOTH AND THEN DRY IT WITH A DRY CLOTH. DO NOT APPLY WATER DIRECTLY TO THE JUPITER JUMBO: WATER MAY DAMAGE THE FRAME OR ELECTRICAL COMPONENTS, WHICH COULD RESULT IN A MALFUNCTION THAT PUTS RIDER SAFETY AT RISK.

PRECAUTIONS
- KEEP AWAY FROM FIRE AND EXCESSIVE HEAT.
- AVOID INTENSE PHYSICAL IMPACT AND / OR SEVERE VIBRATION.
- RIDE THE JUPITER JUMBO ON A SMOOTH, FLAT SURFACE.
- PROTECT FROM WATER OR MOISTURE.
- CONTACT THE JETSON CARE TEAM IF THERE ARE ANY ISSUES WITH THE JUPITER JUMBO.

STORAGE
- STORE THE JUPITER JUMBO INDOORS AND IN A DRY PLACE.
- COVER THE JUPITER JUMBO TO PROTECT IT AGAINST DUST.

ONE-YEAR GENERAL LIMITED WARRANTY

All new Jetson products, excluding parts and accessories, are warranted against defects in materials and workmanship for a period of one year from the date of original retail purchase when used in accordance with Jetson's user manuals (refer to ridejetson.com/support).
Under this warranty, you will be able to direct your claims to Jetson even in situations where you purchased the Jetson Product from one of our authorized retailers.
To read the full terms of our warranty, visit ridejetson.com/warranty.

Stay connected.

Be sure to follow **@ridejetson**
on social media to learn about fantastic offers,
giveaways, and all the latest Jetson news.

Loving your ride?

Then be sure to leave a review at ridejetson.com/reviews.
We can't wait to hear from you!

JETSON

#MakeMoves

Questions? Let us know.

ridejetson.com/support
ridejetson.com/chat

To exercise your product's
1-year limited warranty
or inquire about warranty
coverage, contact us directly.

US/CANADA: 1-888-976-9904
MEX: +001 888 976 9904
UK: +44 (0)33 0838 2551

Manufactured in Zhejiang, China
Imported by Jetson Electric Bikes LLC.
P.O. Box 320149, 775 4th Ave #2,
Brooklyn, NY 11232

www.ridejetson.com

Made in China
Date Code: 06/2022

JETSON

CONFIDENTIAL FILE INFORMATION
THIS PAGE NOT FOR PRINT

DATE: 05/06/2022
FILE NAME: jupiter-jumbo-manual.indd
PAGE SIZE: L5.5” * H4.25” | L13.97cm * H10.795cm
BOOKLET FORMAT; SADDLE STITCHED BINDING
BLEED: .125” on all sides

PRINTER SPECIFICATIONS

SCALE: 100%
MATERIALS:
- 250g C2S
- Printed double sided: 4C



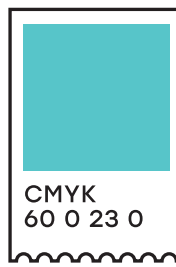

DO NOT PRINT COMMENT,SCORING OR DIELINES LAYERS!

Physical sample according to specs must be approved by JETSON Bike before proceeding to production.
COMMENTS (Internal reference only)
File created by Eitan Adika, Jangmu Lama & Angelina Zavilevich