JETSON

Joust
Kids' Electric Scooter.

A guide for your ride.

IMPORTANT: READ CAREFULLY AND RETAIN FOR FUTURE REFERENCE.

MODEL SKU: JJOUST-BLU

Jetson's top two riding rules:
Be safe. Have fun!

Contents

Safety Warnings 4

Warranty Coverage 6

Product Overview 8

Product Specs 10

Online Resources 11

1. Getting Started

1.1 Starting Notes 12

1.2 Assembling the Stem 13

1.3 Assembling the Handlebar 16

1.4 Adjusting the Handbrake Position (if necessary) 19

1.5 Charging the Battery 20

1.6 Powering On & Off 22

2. Making Moves

2.1 Riding the Joust 23

2.2 Using the Brake 24

2.3 Using the Kickstand 25

2.4 Maximizing Speed & Run Time 26

2.5 Resetting the Joust 27

3. Safe Journeying

3.1 Pre-Ride Safety Checks 28

3.2 Helmet Safety 29

3.3 Care & Maintenance 30

Safety Warnings

1. All safety labels need to be in place and understood by the operator.
2. Persons with the following conditions shall be cautioned not to operate:
   Persons with any mental or physical conditions that may make them susceptible to injury or impair their physical dexterity or mental capabilities to recognize, understand, and perform all of the safety instructions and to be able to assume the hazards inherent in unit use.
3. Always make sure the battery is full charged before using this electric scooter.
4. Always inspect all the electric scooter components if they are loose or damaged, tighten loose components or call customer service if parts need to be replaced.
5. Always test the braking system before using this electric scooter.
6. Always inspect the tire conditions before using this electric scooter .
7. Always use vehicle in a safe, secure environment on flat, smooth paved surfaces only.
8. Only use the battery specified by the manufacturer.
9. Only use the charger specified by the manufacture.

- Before use, please read the user manual and safety warnings carefully, and make sure you understand and accept all the safety instructions. The user will be responsible for any loss or damage caused by improper use.
- **Failure to use correct charger can result in fire and explosion, resulting in property damage, injury, and death.**
- Before each cycle of operation, the operator shall perform the preoperation checks specified by the manufacturer: That all guards and pads originally supplied by the manufacturer are in proper place and in serviceable condition; That the braking system is functioning properly; That any and all axle guards, chain guards, or other covers or guards supplied by the manufacturer are in place and in serviceable condition; That tires are in good condition, inflated properly, and have sufficient tread remaining; The area that the product is to be operated should be safe and suitable for safe operation.
- Components shall be maintained and repaired in accordance with the manufacturer's specifications and using only the manufacturer's authorized replacement parts with installation performed by dealers or other skilled persons.
- Warning against recharging non-rechargeable batteries.
- Don't allow hands, feet, hair, body parts, clothing, or similar articles to come in contact with moving parts, wheels, or drive train, while the motor is running.
- This product should not be used by children or persons with reduced physical, sensory or mental capabilities, or lack of experience and knowledge, unless they have been given supervision or instruction (IEC 60335-1/A2:2006).
- Unsupervised children should not play with the product (IEC 60335-1/A2:2006).
- Adult supervision is required.
- The rider should not exceed 120 lb.
- Units shall not be operated to perform racing, stunt riding, or other maneuvers, which may cause loss of control, or may cause uncontrolled operator/passenger actions or reactions.
- Never use near motor vehicles.
- Avoid sharp bumps, drainage grates, and sudden surface changes. Scooter may suddenly stop.
- Avoid streets and surfaces with water, sand, gravel, dirt, leaves, and other debris. Wet weather impairs traction, braking, and visibility.
- Avoid riding around flammable gas, steam, liquid, or dust that could cause fire.
- Operators shall adhere to all of the manufacturer's recommendations and instructions, as well as comply with all laws and ordinances: Units without headlights shall be operated only with adequate daylight conditions of visibility, and; Owners shall be encouraged to highlight (for conspicuity) using lighting, reflectors, and for low-riding units, signal flags on flexible poles.
- Persons with the following conditions shall be cautioned not to operate: Those with heart conditions; Pregnant women; Persons with head, back, or neck ailments, or prior surgeries to those areas of the body; and persons with any mental or physical conditions that may make them susceptible to injury or impair their physical dexterity or mental capabilities to recognize, understand, and perform all of the safety instructions and to be able to assume the hazards inherent in unit use.
- Do not ride at night.
- Do not ride after drinking or taking prescription medication.
- Do not carry items when riding.
- Never operate the product barefooted.

- Always wear shoes and keep shoelaces tied.
- Make sure your feet are always placed securely on the deck.
- Operators always shall use appropriate protective clothing, including but not limited to a helmet, with appropriate certification, and any other equipment recommended by the manufacturer: Always wear protective equipment such as helmet, knee pads, and elbow pads.
- Always give way to pedestrians.
- Be alert to things in front and far away from you.
- Do not allow distractions when riding, such as answering the phone or engaging in any other activities.
- The product cannot be ridden by more than one person.
- When you ride the product along with other riders, always keep a safe distance to avoid a collision.
- When turning, be sure to maintain your balance.
- Riding with improperly adjusted brakes is dangerous and can result in serious injury or death.
- The brake may become hot while operating, do not touch the brake with your bare skin.
- Applying brakes too hard or too suddenly can lock up a wheel, which could cause you to lose control and fall. Sudden or excessive application of the brake may result in injury or death.
- If the brake loosens, please adjust with the hexagon wrench, or please contact the Jetson Care Team.
- Replace worn or broken parts immediately.
- Check whether all safety labels are in place and understood before riding.
- The owner shall allow the use and operation of the unit after a demonstration that such operators can understand and operate all components of the unit before use.
- Do not ride without proper training. Do not ride at high speeds, on uneven terrain, or on slopes. Do not perform stunts or turn abruptly.
- Recommended for indoor use.
- Prolonged exposure to UV rays, rain and the elements may damage the enclosure materials, store indoors when not in use.
- WARNING – Risk of Fire and Electric Shock – No User Serviceable Parts.
- AVERTISSEMENT- Risque d'incendie et de choc électrique - Aucune des pièces ne peut être réparée par l'utilisateur.

California Proposition 65

⚠WARNING:

This product can expose you to chemicals including Chromium and Cadmium, which are known to the State of California to cause cancer and birth defects or other reproductive harm. For more information go to: www.P65Warnings.ca.gov

⚠WARNING:

To reduce the risk of injury, adult supervision is required. Never use in roadways, near motor vehicles, on or near steep inclines or steps, swimming pools or other bodies of water, always wear shoes, and never allow more than 1 rider(s).

MODIFICATIONS
Do not attempt to disassemble, modify, repair, or replace the unit or any components of the unit without instruction from the Jetson Care Team. This will void any warranty, and can lead to malfunctions which may cause injury.

ADDITIONAL OPERATION PRECAUTIONS
Do not lift the product off the ground while it is on and the wheels are in motion. This can result in freely spinning wheels, which may cause injury to yourself or others nearby. Do not jump on or off the product, and do not jump while using it. Always keep your feet firmly planted on the foot rest while in operation. Always check the battery charge before using.

DISPOSAL OF USED BATTERY

Battery may contain hazardous substances which could endanger the environment and human health. This symbol marked on the battery and/or packaging indicates that used battery shall not be treated as municipal waste. Batteries should be disposed of at an appropriate collection point for recycling. By ensuring the used batteries are disposed of correctly, you will help preventing potential negative consequences for the environment and human health. The recycling of materials will help to conserve natural resources. For more information about recycling of used batteries, please contact your local municipality waste disposal service.

Warranty Coverage

GENERAL LIMITED WARRANTY
Your new Jetson product is warranted against defects in materials and workmanship as indicated on ridejetson.com/warranty for a period of time from the date of original retail purchase when used in accordance with Jetson's user manuals (refer to ridejetson.com/support). **Under this warranty, you will be able to direct your claims to Jetson even in situations where you purchased the Jetson Product from one of our authorized retailers.** To read the full terms of our warranty, visit ridejetson.com/warranty.

Product Overview

1. HANDLEBAR*
2. HANDBRAKE
3. STEM*
4. FRONT WHEEL
5. CHARGING PORT WITH COVER
6. POWER SWITCH
7. DECK
8. LED LIGHTS
9. KICKSTAND
10. MOTOR
11. REAR WHEEL
12. ACCELERATION THROTTLE
13. RESET BUTTON
14. CHARGER

TOOLS, HARDWARE, AND PARTS INCLUDED FOR ASSEMBLY:



5MM ALLEN KEY

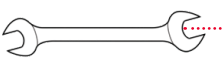

10MM / 8MM DOUBLE-SIDED WRENCH (10MM END NOT NEEDED FOR ASSEMBLY OF THIS PRODUCT.)

(B1) 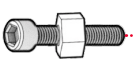

LARGE BOLTS (M6 X 30MM) WITH NUTS (M6), X3 INCLUDING 1 SPARE SET



HANDLEBAR CLAMP TOP

(B2) 

MEDIUM BOLTS (M6 X 22MM) WITH NUTS (M6), X3 INCLUDING 1 SPARE SET

*REQUIRES ASSEMBLY.

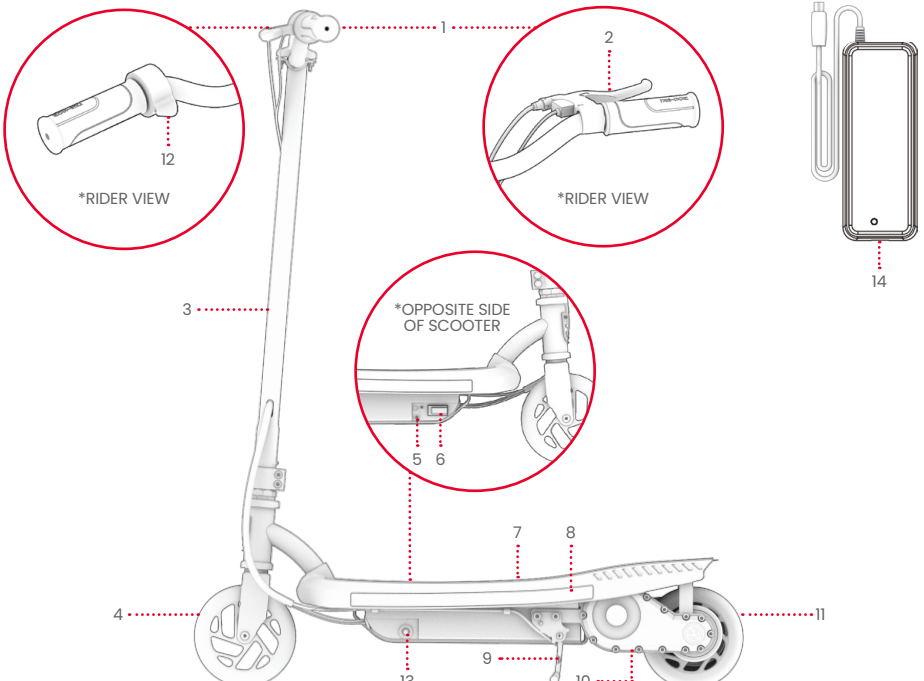

NOTE: IMAGES MAY NOT REFLECT EXACT APPEARANCE OF ACTUAL PRODUCT.

Product Specs

- SPEED: UP TO 8.2 MPH*
- RUN TIME: UP TO 40 MIN* (PER FULL CHARGE)
- MOTOR: 120W
- BATTERY: 24V, 4.5AH LEAD-ACID
- CHARGING TIME: UP TO 8 HOURS
- MAX CLIMBING ANGLE: 5°**
- PRODUCT DIMENSIONS: 29.5" (L) × 20.5" (W) × 36.6" (H)
- DECK SIZE: 22.85" × 6.7"
- WHEEL SIZE: 5.5"
- PRODUCT WEIGHT: 20.4 LB
- RECOMMENDED AGE: 8+
- WEIGHT LIMIT: 120 LB

* PRODUCT RUN TIME, SPEED, BATTERY LIFE, AND OTHER SPECIFICATIONS MAY VARY BASED ON RIDER AND RIDING CONDITIONS. SEE SECTION 2.4 FOR TIPS ON MAXIMIZING SPEED & RUN TIME.
** THE MAXIMUM ACHIEVABLE SPEED WILL BE LOWER WHEN RIDING UP AN INCLINE.

Online Resources



Scan for our most updated Joust onboarding materials and support resources.

1. Getting Started

1.1 Starting Notes

- KICK OFF YOUR ADVENTURE RIGHT: PRIOR TO USE OF THIS PRODUCT, CAREFULLY READ THE ENTIRE USER MANUAL, INCLUDING SAFETY WARNINGS. MAKE SURE YOU UNDERSTAND, ACCEPT, AND ADHERE TO ALL:
  - MANUFACTURER'S RECOMMENDATIONS.
  - SAFETY INSTRUCTIONS AND WARNINGS.
  - LOCAL RIDING AND OPERATIONAL LAWS AND ORDINANCES.

- REMOVE ALL PACKAGING BEFORE BEGINNING ASSEMBLY.

- THE DIRECTIONS GIVEN IN THIS MANUAL—RIGHT, LEFT, FRONT/FORWARD, AND REAR/BACK—ARE ORIENTED AS THE RIDER WOULD SEE THEM WHEN STANDING ON THE SCOOTER. THE "RIGHT SIDE" OF THE SCOOTER, FOR EXAMPLE, IS THE SIDE WHERE THE RIDER'S RIGHT HAND WILL BE.

⚠WARNING:

FAILURE TO COMPLY WITH THE FOLLOWING INSTRUCTIONS MAY RESULT IN INJURY TO THE CHILD OR OTHERS.
- KEEP SMALL PARTS AWAY FROM CHILDREN DURING ASSEMBLY.
- ACCESSORY MUST BE ASSEMBLED AND REMOVED BY AN ADULT.
- FREQUENTLY INSPECT THE PRODUCT FOR DAMAGE.

* ADULTS MUST ASSIST CHILDREN IN THE ASSEMBLY AND INITIAL ADJUSTMENT PROCEDURES OF THE PRODUCT.

1.2 Assembling the Stem

1. FROM THE LOOSE HARDWARE, REMOVE THE NUTS FROM THE 2 LARGE BOLTS (B1) BY TWISTING THEM OFF COUNTERCLOCKWISE. SET THE HARDWARE ASIDE. (3RD SET IS SPARE.)
2. GENTLY GUIDING THE SEMI-ATTACHED HANDLEBAR, POSITION THE STEM VERTICALLY ABOVE THE STEM CLAMP SUCH THAT THE PIN HOLE IN THE STEM IS ABOVE THE PIN ON THE SCOOTER BASE.

   ⚠ **IMPORTANT:** TAKE CARE WHEN HANDLING THE STEM WITH SEMI-ATTACHED HANDLEBAR.
3. PUSH IN THE PIN ON THE SCOOTER BASE AND SLIDE THE STEM ONTO THE SCOOTER BASE UNTIL THE PIN POPS INTO THE PIN HOLE IN THE STEM.

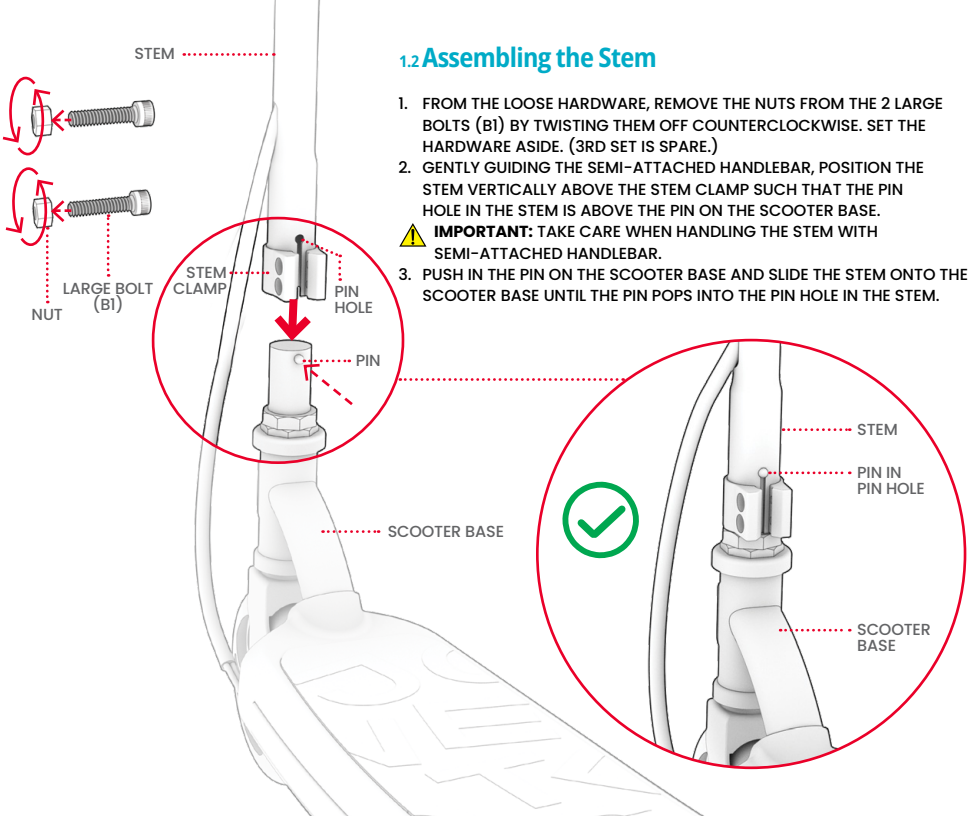

4. FROM THE LEFT SIDE OF THE SCOOTER (AS VIEWED FROM THE RIDING POSITION), INSERT ONE BOLT THROUGH THE TOP 2 HOLES OF THE STEM CLAMP.
5. REPEAT STEP 4 WITH THE 2ND BOLT IN THE BOTTOM 2 HOLES.
6. TWIST A NUT CLOCKWISE ONTO THE END OF EACH BOLT.

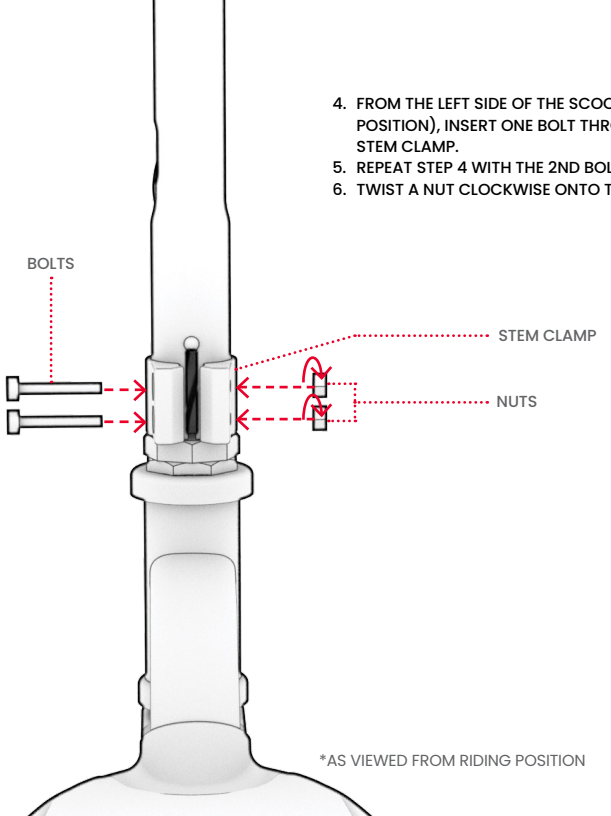

*AS VIEWED FROM RIDING POSITION

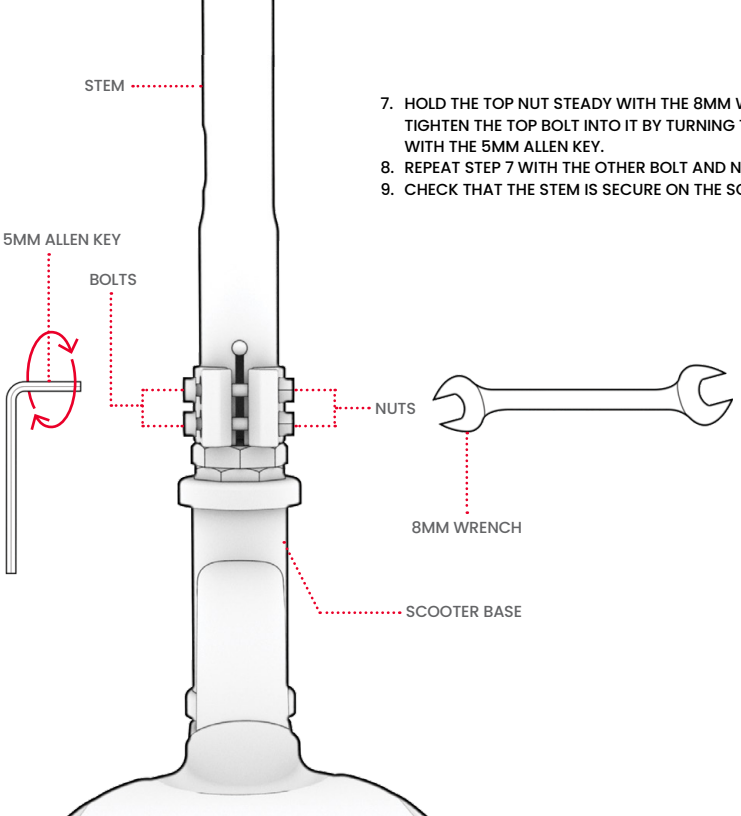

7. HOLD THE TOP NUT STEADY WITH THE 8MM WRENCH WHILE YOU TIGHTEN THE TOP BOLT INTO IT BY TURNING THE BOLT CLOCKWISE WITH THE 5MM ALLEN KEY.
8. REPEAT STEP 7 WITH THE OTHER BOLT AND NUT.
9. CHECK THAT THE STEM IS SECURE ON THE SCOOTER BASE.

1.3 Assembling the Handlebar

1. FROM THE LOOSE HARDWARE IN THE BOX, REMOVE THE MEDIUM NUTS FROM THE 2 MEDIUM BOLTS (B2) BY TWISTING THEM OFF COUNTERCLOCKWISE. SET THE HARDWARE ASIDE. (3RD SET IS SPARE.)
2. POSITION THE HANDLEBAR ATOP THE STEM SUCH THAT THE FOLLOWING CONDITIONS ARE MET:
   - THE HANDLEBAR IS NESTLED IN THE HANDLEBAR CLAMP BASE.
   - THE HANDBRAKE IS ON THE RIGHT SIDE OF THE SCOOTER AS VIEWED FROM THE RIDING POSITION.
   - THE HANDLEBAR IS CENTERED ON THE STEM.
   - THE HANDLEBAR GRIPS ARE HIGHER THAN THE CENTER OF THE HANDLEBAR.
3. CAREFULLY TUCK THE THROTTLE CONNECTION WIRE INTO THE HOLE IN THE STEM UNTIL THE WIRE IS TAUT.

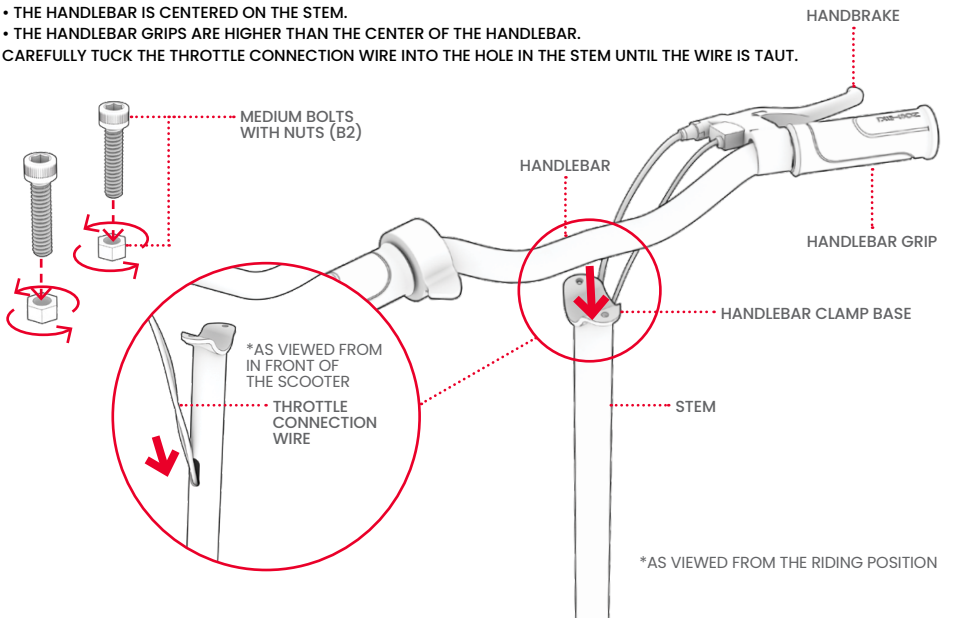

4. PLACE THE CLAMP TOP OVER THE CENTER OF THE HANDLEBAR SO THAT THE 2 PRE-DRILLED HOLES IN THE CLAMP TOP ARE ALIGNED WITH THE PRE-DRILLED HOLES IN THE CLAMP BASE.
5. FROM THE TOP, INSERT 1 BOLT INTO EACH SET OF ALIGNED HOLES UNTIL THE TIP EMERGES THROUGH THE CLAMP BASE.
6. TWIST A NUT CLOCKWISE ONTO THE END OF EACH BOLT.

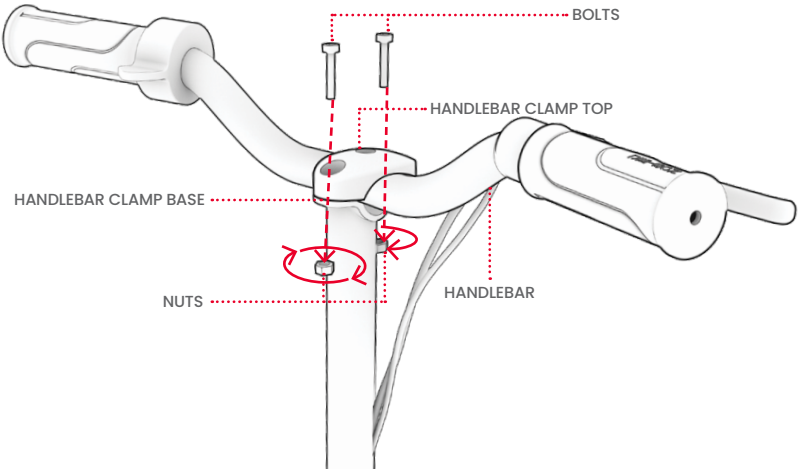

7. HOLD ONE NUT STEADY WITH THE 8MM WRENCH WHILE YOU TIGHTEN THE BOLT INTO THE NUT BY TURNING THE BOLT CLOCKWISE WITH THE 5MM ALLEN KEY.
8. REPEAT STEP 7 WITH THE OTHER BOLT AND NUT.
9. CHECK THAT THE HANDLEBAR IS SECURE.

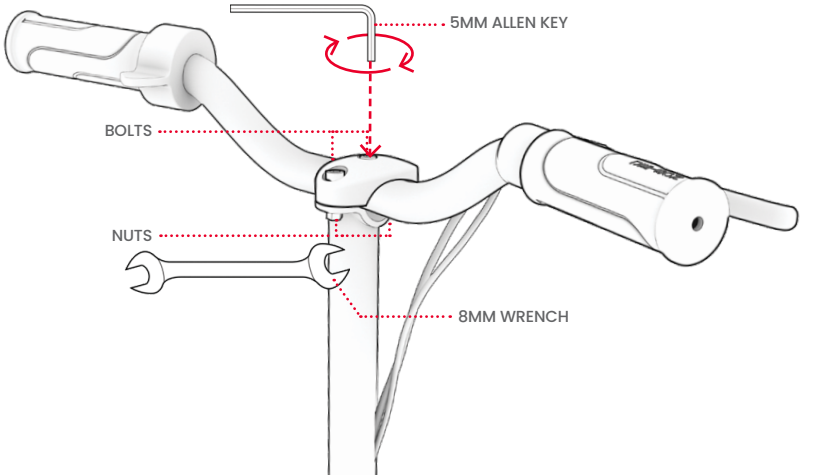

1.4 Adjusting the Handbrake Position (if necessary)

YOU WILL NEED THE 5MM ALLEN KEY.

1. LOOSEN THE BOLT ON THE HANDBRAKE CLAMP BY TURNING IT COUNTERCLOCKWISE FOR 1 – 2 ROTATIONS WITH THE 5MM ALLEN KEY.
2. ROTATE THE HANDBRAKE CLAMP AROUND THE HANDLEBAR UNTIL THE HANDBRAKE LEVER IN A POSITION AT WHICH CAN EASILY BE REACHED BY THE RIDER WHEN HOLDING ONTO THE HANDLEBAR.
3. WHILE HOLDING THE HANDBRAKE IN THE DESIRED POSITION, TIGHTEN THE BOLT ON THE CLAMP BY TURNING IT CLOCKWISE WITH THE ALLEN KEY.

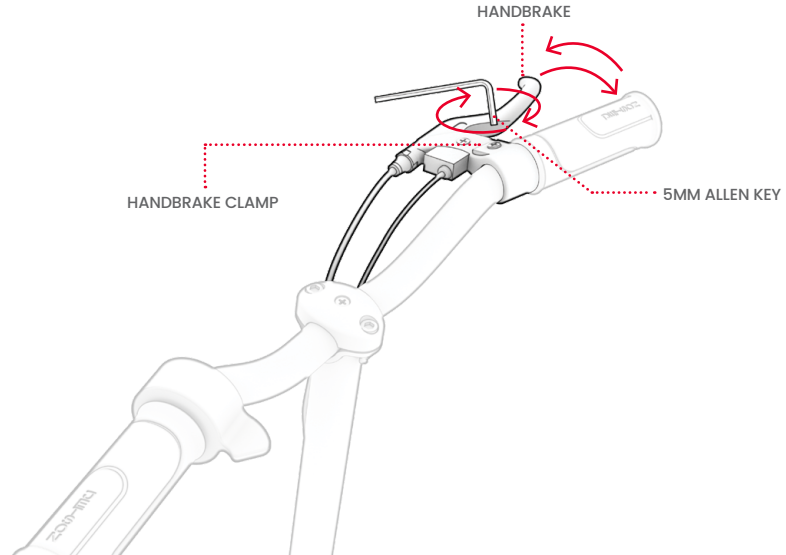

1.5 Charging the Battery

IMPORTANT: PRIOR TO THE FIRST USE OF YOUR SCOOTER, LEAVE THE SCOOTER CHARGING FOR 8 TO 10 HOURS, EVEN IF THE CHARGING INDICATOR LIGHT CHANGES FROM RED TO GREEN DURING THAT TIME. AFTER THAT, CHARGE YOUR SCOOTER ONLY UNTIL THE INDICATOR LIGHT ILLUMINATES IN GREEN, INDICATING A FULL CHARGE—ABOUT 8 HOURS FOR A FULLY DEPLETED BATTERY.

1. ENSURE THAT THE POWER SWITCH IS IN THE OFF POSITION. (SECTION 1.6)
2. PULL OPEN THE CHARGING PORT COVER ON THE SCOOTER.
3. PLUG THE CHARGER INTO THE WALL, AND THEN PLUG THE CHARGER CORD INTO THE CHARGING PORT.
4. WHEN THE INDICATOR LIGHT ON THE CHARGER TURNS FROM RED TO GREEN, YOUR BATTERY HAS REACHED FULL CHARGE. REMOVE THE CHARGER FROM THE CHARGING PORT AND UNPLUG THE CABLE FROM THE WALL OUTLET.
5. CLOSE THE CHARGING PORT COVER.

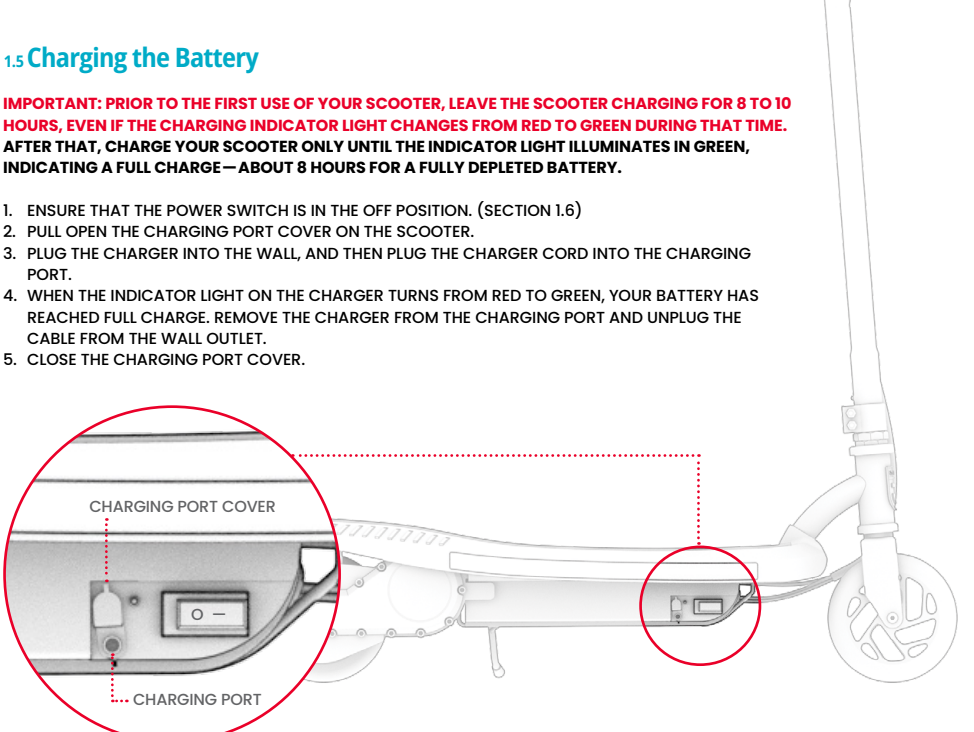

IMPORTANT CHARGING NOTES:

- ONLY USE THE INCLUDED CHARGER OR ONE OBTAINED DIRECTION THROUGH JETSON LABELED WITH FY0182400600, OR THE PART SKU PJJOUST-CH.

⚠ FAILURE TO USE CORRECT CHARGER CAN RESULT IN FIRE AND EXPLOSION, RESULTING IN PROPERTY DAMAGE, INJURY, AND DEATH.

- PLUG THE CHARGER INTO THE WALL BEFORE THE CHARGING PORT.
- NEVER TURN ON THE SCOOTER WHILE IT IS CHARGING.
- CHARGE THE BATTERY UNTIL IT IS FULLY CHARGED—APPROXIMATELY 8 HOURS—AND THEN DISCONNECT THE CHARGER IMMEDIATELY.
- NEVER LEAVE YOUR SCOOTER CHARGING OVERNIGHT OR FOR EXTENDED PERIODS OF TIME.
- NEVER LEAVE YOUR SCOOTER CHARGING UNATTENDED.
- DO NOT ATTEMPT TO REMOVE OR DISASSEMBLE THE BATTERY.
- CHARGING AMBIENT TEMPERATURE RANGE: 32°F(0°C)-104°F(40°C)
- OPERATING AMBIENT TEMPERATURE RANGE: 5°F(-15°C)-104°F (40°C)

CHARGER INDICATOR LIGHT ON THE CHARGER:

- RED - CHARGING
- GREEN - CHARGING COMPLETE

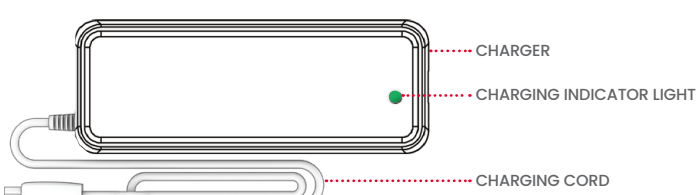

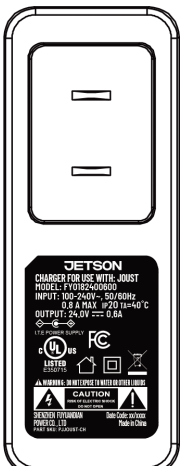

THIS IS THE MARKING YOUR CHARGER WILL HAVE.

1.6 Powering On & Off

A SINGLE POWER SWITCH ON THE SIDE OF THE SCOOTER DECK CONTROLS BOTH YOUR SCOOTER'S MOTOR AND THE LED DECK LIGHTING.

TO POWER ON: TOGGLE THE POWER SWITCH TO THE O SIDE.
TO POWER OFF: TOGGLE THE POWER SWITCH TO THE — SIDE.

IMPORTANT: AFTER 5 MINUTES WITHOUT USE, YOUR SCOOTER WILL AUTOMATICALLY POWER OFF. TO POWER THE SCOOTER BACK ON, TOGGLE THE POWER SWITCH TO OFF [O] AND THEN BACK TO ON [—].

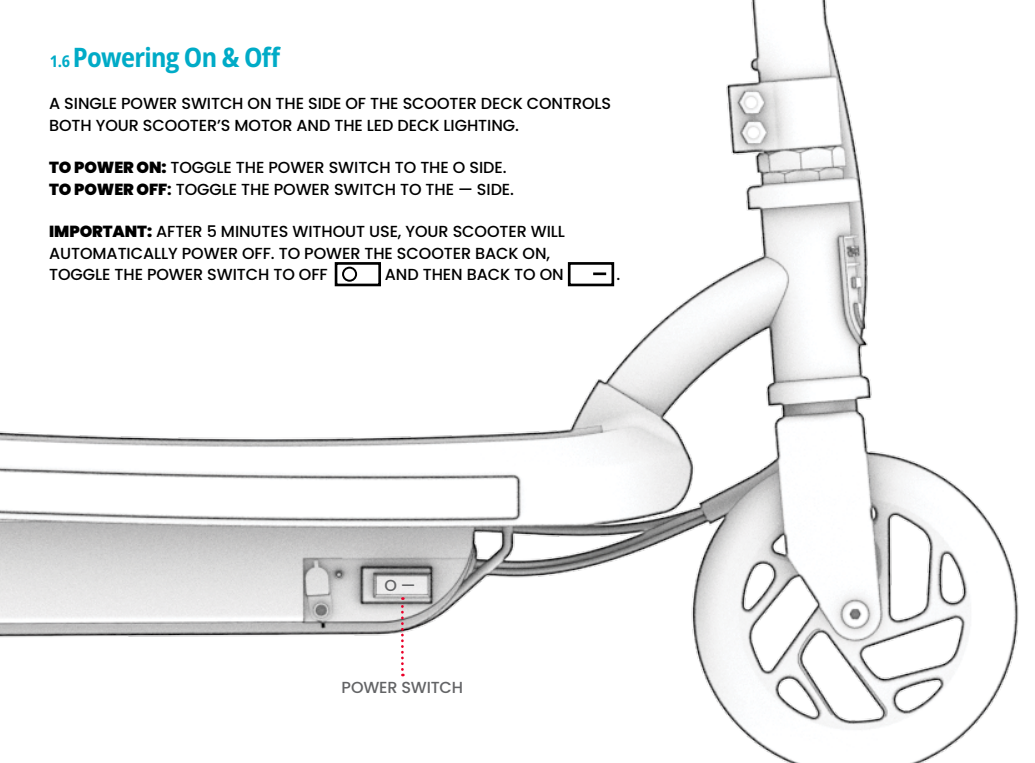

2. Making Moves

2.1 Riding the Joust

IMPORTANT: THE JOUST'S MOTOR REQUIRES MOTION ACTIVATION TO START. PRIOR TO ENGAGING THE THROTTLE, PROPEL THE SCOOTER FORWARD WITH 1 - 2 CONSECUTIVE FOOT KICKS. THEN USE THE THROTTLE TO CONTINUE ACCELERATION AND MOVEMENT.

1. PLACE ONE FOOT AT THE FRONT OF THE DECK FACING FORWARD. PROPEL THE SCOOTER FORWARD MANUALLY BY PUSHING 1 - 2 TIMES CONSECUTIVELY WITH YOUR OTHER FOOT.
2. USE YOUR THUMB TO PUSH AND HOLD THE ACCELERATION THROTTLE.
3. WHILE THE MOTOR PICKS UP MOMENTUM, PLACE YOUR KICKING FOOT AT THE BACK OF THE DECK, TURNED OUTWARD AT A 70 - 90° ANGLE TO PROVIDE STABILITY.

TO ACCELERATE: SLOWLY PUSH DOWN ON THE THROTTLE. THE MORE YOU ENGAGE THE THROTTLE, THE FASTER THE SCOOTER WILL TRAVEL.

⚠ **IMPORTANT:** TO AVOID SUDDEN BURSTS OF SPEED, ALWAYS ENGAGE THE THROTTLE GRADUALLY.

TO MAKE TURNS: ROTATE THE HANDLEBAR TO THE LEFT OR RIGHT.

TO SLOW DOWN OR STOP: RELEASE THE THUMB THROTTLE AND USE THE BRAKE. (SECTION 2.2)

IMPORTANT: THE SCOOTER WILL POWER OFF WHEN BATTERY CHARGE IS DEPLETED. RECHARGE THE SCOOTER FULLY (SECTION 1.5) PRIOR TO POWERING ON AND RIDING AGAIN.

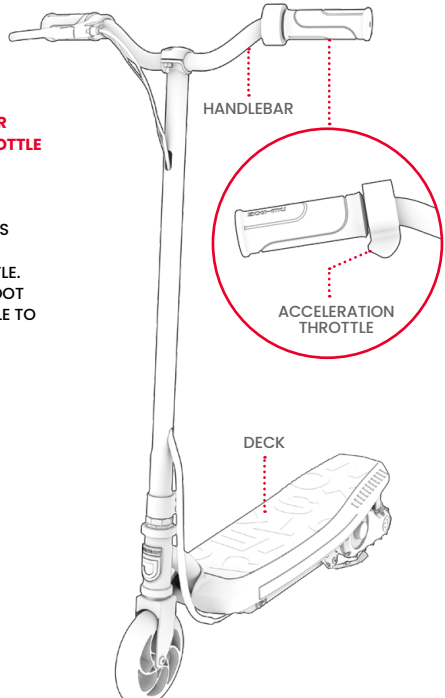

2.2 Using the Brake

SQUEEZE THE HANDBRAKE GENTLY TO SLOW DOWN. SQUEEZE MORE FORCEFULLY TO COME TO A COMPLETE STOP. TO AVOID ABRUPT MOVEMENTS, TRY TO SQUEEZE THE HANDBRAKE GRADUALLY.

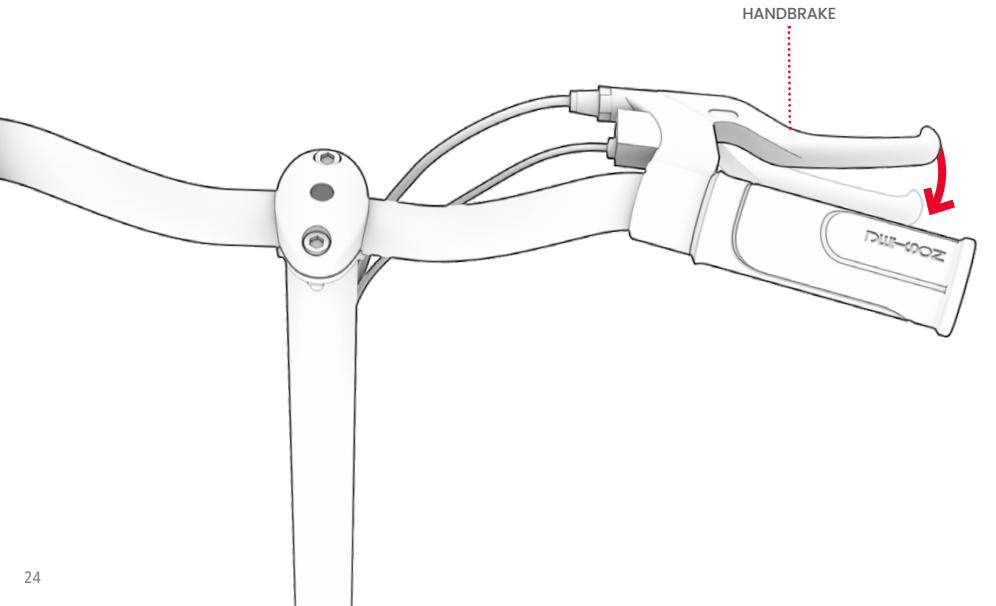

2.3 Using the Kickstand

TO USE THE KICKSTAND, PIVOT IT DOWN AND GENTLY TILT YOUR SCOOTER ONTO IT TO STAND. TO RAISE THE KICKSTAND, PIVOT IT BACK UP.

IMPORTANT: ALWAYS RAISE THE KICKSTAND BEFORE RIDING.

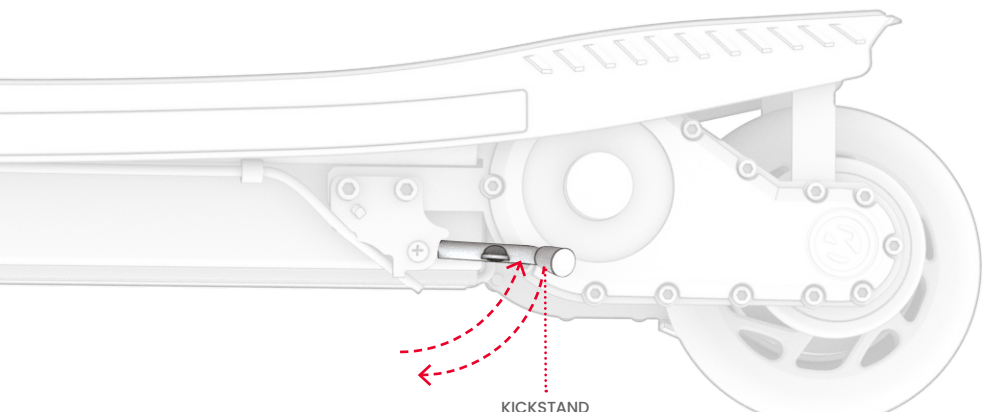

2.4 Maximizing Speed & Run Time

THE HARDER THE MOTOR NEEDS TO WORK, THE FASTER YOUR BATTERY WILL DRAIN. IN IDEAL CONDITIONS, THE MAXIMUM RUN TIME THAT CAN BE ACHIEVED PER BATTERY CHARGE IS 40 MINUTES AND THE MAXIMUM SPEED 8.2 MPH.

THE FOLLOWING FACTORS WILL ALSO AFFECT SPEED AND RUN TIME. THEY INCLUDE:

- **RIDING SURFACE:** TRAVELING OVER A ROUGH SURFACE REQUIRES MOTOR POWER THAN RIDING ON A SMOOTH ONE.
- **CARRYING WEIGHT:** MORE WEIGHT DECREASES ACHIEVABLE RUN TIME.
- **RIDING STYLE:** FREQUENT STARTING AND STOPPING WILL REDUCE THE ACHIEVABLE RUN TIME ON ONE BATTERY CHARGE.
- **AIR TEMPERATURE:** THE IDEAL TEMPERATURE FOR RIDING AND STORING THE SCOOTER IS BETWEEN 50 - 90ºF (10 - 35ºC).
- **INCLINE**: THE MOTOR HAS TO WORK HARDER TRAVELING UPHILL THAN ON FLAT STRETCHES OR DOWNHILL. AT INCLINES STEEPER THAN 5°, THE JOUST WILL AUTOMATICALLY POWER OFF TO PROTECT THE MOTOR FROM BEING OVERWORKED. TO CONTINUE RIDING, RESET THE SCOOTER. (SECTION 2.5)
- **BATTERY MAINTENANCE:** TIMELY BATTERY CHARGING AFTER EVERY RIDE HELPS MAINTAIN BATTERY CAPACITY AND STRENGTH.

2.5 Resetting the Joust

⚠ **IMPORTANT:** TO PROTECT ITS ELECTRICAL SYSTEM, THE SCOOTER WILL AUTOMATICALLY POWER OFF WHEN ITS INTERNAL SYSTEM IS OVERWORKED—SUCH AS WHEN THE SCOOTER IS TRAVELING UPHILL AT AN INCLINE STEEPER THAN 5°.

WHEN THAT HAPPENS, THE RESET BUTTON ON THE SIDE OF THE DECK WILL POP OUT.

TO RESET THE SCOOTER AND RESTORE FUNCTIONALITY:

1. PUSH THE RESET BUTTON IN.
2. POWER OFF THE SCOOTER (SECTION 1.6).
3. WAIT AT LEAST 30 MINUTES BEFORE POWERING BACK ON AND RIDING AGAIN.

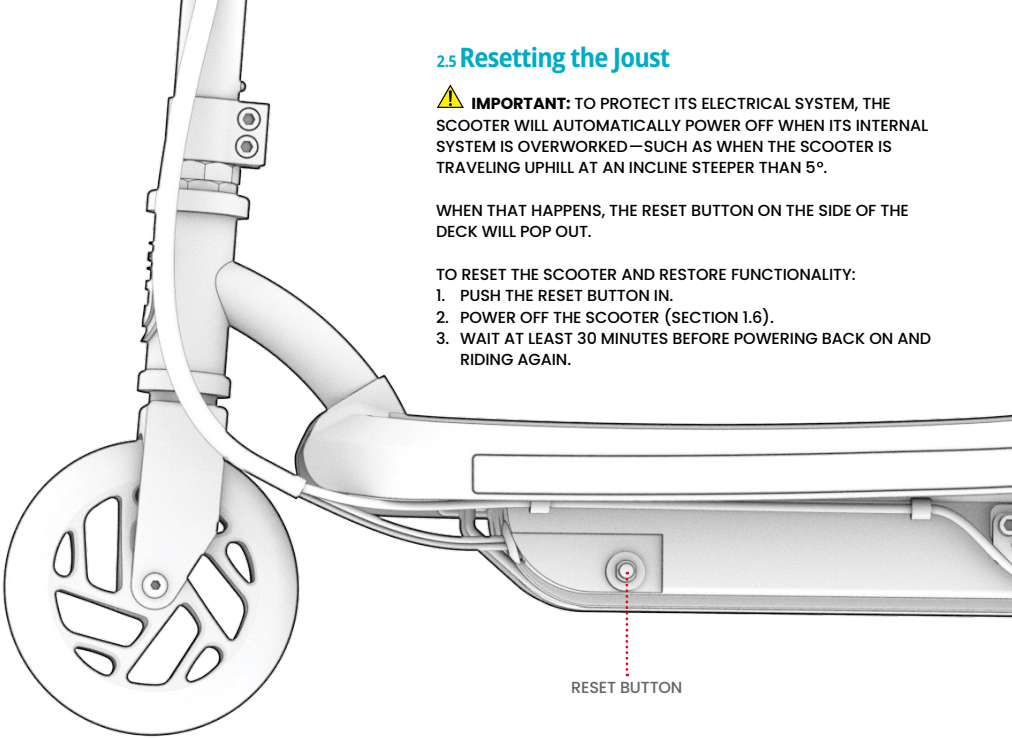

* IF RESETTING THE SCOOTER DOES NOT CORRECT THE ISSUE, CONTACT THE JETSON CARE TEAM FOR FURTHER ASSISTANCE.

3. Safe Journeying

3.1 Pre-Ride Safety Checks

CONDUCT THESE IMPORTANT SAFETY CHECKS BEFORE EVERY JOURNEY:

BRAKE

MAKE SURE THE BRAKE WORKS PROPERLY SUCH THAT:

- THE HANDBRAKE LEVER IS SECURED TO THE HANDLEBAR AND LUBRICATED SO IT COMPRESSES EASILY.
- ENGAGING THE HANDBRAKE BRINGS THE SCOOTER TO A STOP.

FRAME

- CHECK THAT THE SCOOTER FRAME IS NOT DAMAGED, BENT, OR BROKEN.
- CHECK THAT THE STEM IS SECURED BY THE STEM CLAMP.

STEERING

- CHECK THAT THE HANDLEBAR IS SECURED IN POSITION BY THE HANDLEBAR CLAMP.
- CHECK THAT THE WHEEL AND HANDLEBAR ARE IN ALIGNMENT.

WHEELS

- CHECK THAT WHEELS DO NOT SHOW SIGNS OF EXCESSIVE WEAR OR ARE DAMAGED.
- CHECK THAT THE WHEELS ARE SECURED TO THE FRAME.

WIRING

- CHECK THAT THE WIRES ARE NOT IN THE WAY OF SCOOTER MECHANISMS.
- CHECK THAT THE WIRING IS NOT DAMAGED OR FRAYED.

3.2 Helmet Safety

A HELMET SHOULD BE WORN BY THE RIDER AT ALL TIMES.



PROPER POSITIONING:
THE FOREHEAD IS COVERED
BY THE HELMET.



IMPROPER POSITIONING:
THE FOREHEAD IS EXPOSED.
A FALL COULD RESULT IN SERIOUS INJURY.

*** WEAR A HELMET, APPROPRIATE CLOTHING, SHOES, AND SAFETY GEAR. AVOID CLOTHING THAT CAN GET CAUGHT INTO OR UNDER THE WHEELS. CLOSED-TOE, FLAT SHOES ARE RECOMMENDED. WEAR AN ASTM F1492 APPROVED HELMET AND PROTECTIVE GEAR TO PREVENT INJURY IN THE EVENT OF AN ACCIDENT.**

3.3 Care & Maintenance

TAKE GOOD CARE OF YOUR E-SCOOTER TO KEEP IT RIDING SMOOTHLY AND SAFELY. HERE'S HOW:

HANDLING YOUR SCOOTER

- AVOID EXPOSING YOUR SCOOTER TO SEVERE VIBRATION OR INTENSE PHYSICAL IMPACT.
- NEVER DISASSEMBLE THE BATTERY.
- KEEP YOUR SCOOTER AWAY FROM WATER AND MOISTURE.
- RIDE ON SMOOTH, FLAT SURFACES TO AVOID BREAKAGE.
- NEVER CARRY YOUR SCOOTER BY THE WHEELS AND HANDLEBAR.
- TAKE CARE NOT TO PULL OR SNAG THE WIRING CONNECTING THE MOTOR WITH THE HANDLEBAR COMPONENTS.

STORING YOUR SCOOTER

KEEP YOUR SCOOTER:

- INDOORS AND IN A DRY PLACE.
- COVERED, TO PROTECT IT FROM DUST.
- AWAY FROM FIRE OR EXCESSIVE HEAT.
- AT A TEMPERATURE BETWEEN 50 - 90°F (10 - 35°C).

CLEANING YOUR SCOOTER

⚠ DO NOT SPRAY OR APPLY WATER DIRECTLY ONTO YOUR SCOOTER. WATER CAN CAUSE DAMAGE TO THE WIRING, BATTERY COMPARTMENT, AND LIGHTS, AS WELL AS DETERIORATION OF THE FRAME—ALL OF WHICH COULD CAUSE A MALFUNCTION THAT PUTS RIDER SAFETY AT RISK.

TO CLEAN YOUR E-SCOOTER, WIPE IT WITH A DAMP DUST-FREE CLOTH AND FOLLOW WITH A DRY DUST-FREE CLOTH. A SOFT BRISTLED BRUSH AND TIRE FINISHER OR CLEANER CAN BE USED ON THE WHEELS.

Stay connected.

Be sure to follow **@ridejetson**
on social media to learn about fantastic offers,
giveaways, and all the latest Jetson news.



Loving your ride?

Then be sure to leave a review at ridejetson.com/reviews.
We can't wait to hear from you!

JETSON

#MakeMoves

Questions? Let us help.

ridejetson.com/support
ridejetson.com/chat

To exercise your product's warranty or inquire about warranty coverage, contact us directly.

1-888-976-9904

Manufactured in Yongkang, China
Imported by Jetson Electric Bikes LLC.
P.O. Box 320149, 775 4th Ave #2,
Brooklyn, NY 11232

www.ridejetson.com



Made in China
Date Code: 07/2024
Document Edition: v1.0

© 2024, JETSON. ALL RIGHTS RESERVED. Manufactured by JETSON ELECTRIC BIKES LLC.
No portion of this document, including shape, copy, graphics, and design, may be reproduced or transmitted in any form or by any means.