JETSON

JetKart® 3.0
Hoverboard Attachment.

A guide for your ride.

IMPORTANT: READ CAREFULLY AND RETAIN FOR FUTURE REFERENCE.

MODEL SKU: JKAR30-BLK

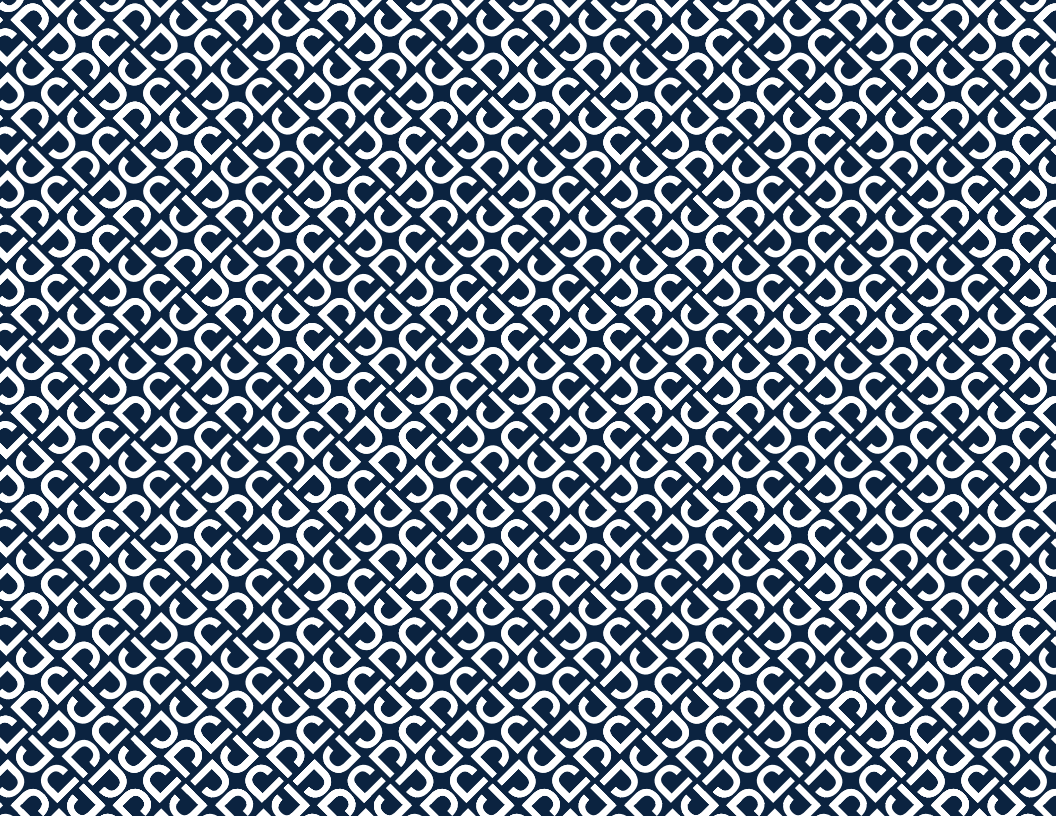

Jetson's top two riding rules:
Be safe. Have fun!

Contents

Safety Warnings 4

Warranty Coverage 5

1. About Your Product

1.1 What's in the Box 6

1.2 Product Specs 8

1.3 Online Resources 9

2. Getting Started

2.1 Starting Notes 10

2.2 Sizing the JetKart® for your Hoverboard* 11

2.3 Attaching the Handles 18

2.4 Attaching the Brackets 22

2.5 Attaching the Seat Back 26

2.6 Assembling the Frame 28

2.7 Attaching the JetKart® to your Hoverboard* 32

2.8 Adjusting the Length of the JetKart® 35

2.9 Adjusting the Height of the Seat 38

* HOVERBOARD NOT INCLUDED

3. Making Moves

3.1 Getting on the JetKart® 41

3.2 Riding the JetKart® 42

3.3 Helmet Safety 43

Care & Maintenance 44

Safety Warnings

- Before use, please read the user manual and safety warnings carefully, and make sure you understand and accept all the safety instructions. The user will be responsible for any loss or damage caused by improper use.
- Before each cycle of operation, the operator shall perform the preoperation checks specified by the manufacturer: That all guards and pads originally supplied by the manufacturer are in proper place and in serviceable condition; That the braking system is functioning properly; That any and all axle guards, chain guards, or other covers or guards supplied by the manufacturer are in place and in serviceable condition; That tires are in good condition, inflated properly, and have sufficient tread remaining; The area that the product is to be operated should be safe and suitable for safe operation.
- Components shall be maintained and repaired in accordance with the manufacturer's specifications and using only the manufacturer's authorized replacement parts with installation performed by dealers or other skilled persons.
- Warning against recharging non-rechargeable batteries.
- Don't allow hands, feet, hair, body parts, clothing, or similar articles to come in contact with moving parts, wheels, or drive train, while the motor is running.
- This product should not be used by children or persons with reduced physical, sensory or mental capabilities, or lack of experience and knowledge, unless they have been given supervision or instruction (IEC 60335-1/A2:2006).
- Unsupervised children should not play with the product (IEC 60335-1/A2:2006).
- Adult supervision is required.
- The rider should not exceed 220 lb.
- Units shall not be operated to perform racing, stunt riding, or other maneuvers, which may cause loss of control, or may cause uncontrolled operator/passenger actions or reactions.
- Never use near motor vehicles.
- Avoid sharp bumps, drainage grates, and sudden surface changes. Scooter may suddenly stop.
- Avoid streets and surfaces with water, sand, gravel, dirt, leaves, and other debris. Wet weather impairs traction, braking, and visibility.
- Avoid riding around flammable gas, steam, liquid, or dust that could cause fire.
- Operators shall adhere to all of the manufacturer's recommendations and instructions, as well as comply with all laws and ordinances: Units without headlights shall be operated only with adequate daylight conditions of visibility, and; Owners shall be encouraged to highlight (for conspicuity) using lighting, reflectors, and for low-riding units, signal flags on flexible poles.
- Persons with the following conditions shall be cautioned not to operate: Those with heart conditions; Pregnant women; Persons with head, back, or neck ailments, or prior surgeries to those areas of the body; and persons with any mental or physical conditions that may make them susceptible to injury or impair their physical dexterity or mental capabilities to recognize, understand, and perform all of the safety instructions and to be able to assume the hazards inherent in unit use.
- Do not ride at night.
- Do not ride after drinking or taking prescription medication.
- Do not carry items when riding.
- Never operate the product barefooted.
- Always wear shoes and keep shoelaces tied.
- Make sure your feet are always placed securely on the deck.
- Operators always shall use appropriate protective clothing, including but not limited to a helmet, with appropriate certification, and any other equipment recommended by the manufacturer: Always wear protective equipment such as helmet, knee pads, and elbow pads.
- Always give way to pedestrians.
- Be alert to things in front and far away from you.
- Do not allow distractions when riding, such as answering the phone or engaging in any other activities.
- The product cannot be ridden by more than one person.
- When you ride the product along with other riders, always keep a safe distance to avoid a collision.
- When turning, be sure to maintain your balance.
- Riding with improperly adjusted brakes is dangerous and can result in serious injury or death.
- The brake may become hot while operating, do not touch the brake with your bare skin.

- Applying brakes too hard or too suddenly can lock up a wheel, which could cause you to lose control and fall. Sudden or excessive application of the brake may result in injury or death.
- If the brake loosens, please adjust with the hexagon wrench, or please contact the Jetson Care Team.
- Replace worn or broken parts immediately.
- Check whether all safety labels are in place and understood before riding.
- The owner shall allow the use and operation of the unit after a demonstration that such operators can understand and operate all components of the unit before use.
- Do not ride without proper training. Do not ride at high speeds, on uneven terrain, or on slopes. Do not perform stunts or turn abruptly.
- Recommended for indoor use.
- Prolonged exposure to UV rays, rain and the elements may damage the enclosure materials, store indoors when not in use.
- Risk of Fire and Electric Shock – No User Serviceable Parts.
- AVERTISSEMENT- Risque d'incendie et de choc électrique - Aucune des pièces ne peut être réparée par l'utilisateur.

MODIFICATIONS
Do not attempt to disassemble, modify, repair, or replace the unit or any components of the unit without instruction from the Jetson Care Team. This will void any warranty, and can lead to malfunctions which may cause injury.

ADDITIONAL OPERATION PRECAUTIONS
Do not lift the product off the ground while it is on and the wheels are in motion. This can result in freely spinning wheels, which may cause injury to yourself or others nearby. Do not jump on or off the product, and do not jump while using it. Always keep your feet firmly planted on the foot rest while in operation. Always check the battery charge before using.

California Proposition 65

⚠WARNING:

This product can expose you to chemical including Cadmium, which is known to the State of California to cause cancer and birth defects or other reproductive harm. For more information go to: www.P65warnings.ca.gov.

Warranty Coverage

GENERAL LIMITED WARRANTY
Your new Jetson product is warranted against defects in materials and workmanship as indicated on ridejetson.com/warranty for a period of time from the date of original retail purchase when used in accordance with Jetson's user manuals (refer to ridejetson.com/support). **Under this warranty, you will be able to direct your claims to Jetson even in situations where you purchased the Jetson Product from one of our authorized retailers.** To read the full terms of our warranty, visit ridejetson.com/warranty.

1. About Your Product

1.1 What's in the Box

A. REAR FRAME
   A1. SEAT BASE
B. SEAT BACK
C. HANDLES (×2)
D. ADJUSTABLE BRACKETS (×2, LEFT AND RIGHT)
E. CENTER CONNECTOR
F. FRONT FRAME
   F1. FOOTREST
   F2. WHEEL
G. VELCRO STRAP (×4, 2 PRE-ATTACHED PLUS 2 SPARE)

HARDWARE AND TOOLS INCLUDED FOR ASSEMBLY:



SMALL BOLTS (×3, INCLUDING ONE SPARE)
PM 5MM X 40MM



SMALL NUTS (×3, INCLUDING ONE SPARE)
M5



LARGE PLASTIC BOLTS (×3, INCLUDING ONE SPARE)
M 10MM X 30MM



KNOBS (×3)
M12



2-BIT PHILLIPS HEAD SCREWDRIVER (A) AND 4MM ALLEN KEY TOOL (B)



10MM/15MM DOUBLE-SIDED WRENCH

* ADULTS MUST ASSIST CHILDREN IN THE ASSEMBLY AND INITIAL ADJUSTMENT PROCEDURES OF THE PRODUCT.

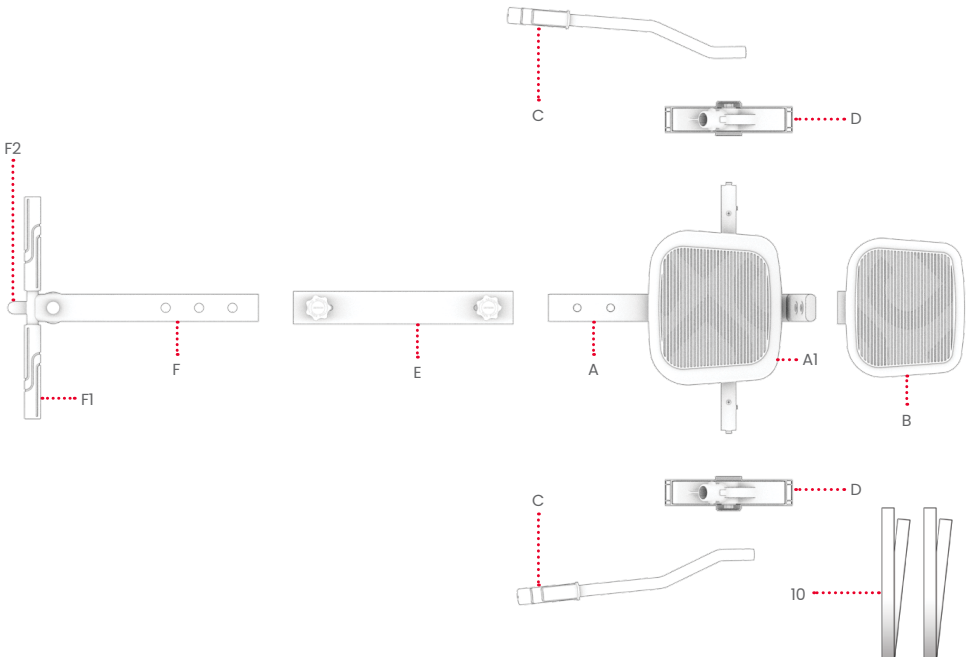

NOTE: IMAGES MAY NOT REFLECT EXACT APPEARANCE OF ACTUAL PRODUCT.

1.2 Product Specs

- WEIGHT LIMIT: 220 LB
- PRODUCT WEIGHT: 12.6 LB
- RECOMMENDED AGE: 12+
- WHEEL SIZE: 4″
- DIMENSIONS: 38.6 - 46.0″ (L) × 18.3″ (W) × 13.1 - 14.6″ (H)

1.3 Online Resources



Scan for our most updated JetKart® 3.0 onboarding materials and support resources.

2. Getting Started

2.1 Starting Notes

- REMOVE ALL PACKAGING BEFORE BEGINNING ASSEMBLY.
- THE DIRECTIONS GIVEN IN THIS MANUAL—RIGHT, LEFT, FRONT/FORWARD, AND REAR/BACK—ARE ORIENTED AS THE RIDER WOULD SEE THEM WHEN SEATED ON THE JETKART. THE "RIGHT SIDE," FOR EXAMPLE, IS THE SIDE WHERE THE RIDER'S RIGHT HAND AND FOOT WILL BE.
- **IMPORTANT:** THE JETKART 3.0 HAS ADJUSTABLE BRACKETS THAT MAKE IT COMPATIBLE WITH MOST, BUT NOT ALL, JETSON HOVERBOARDS. ENSURE A SNUG AND SECURE FIT OF THE BRACKETS ON YOUR HOVERBOARD (SECTION 2.2) BEFORE CONTINUING WITH THE ASSEMBLY PROCESS OR TAKING A RIDE.
- IT MIGHT BE USEFUL TO HAVE EXTRA HANDS FOR ASSEMBLY. GRAB AN ASSISTANT!

⚠WARNING:

FAILURE TO COMPLY WITH THE FOLLOWING INSTRUCTIONS MAY RESULT IN INJURY TO THE CHILD OR OTHERS.
• KEEP SMALL PARTS AWAY FROM CHILDREN DURING ASSEMBLY.
• ACCESSORY MUST BE ASSEMBLED AND REMOVED BY AN ADULT.
• FREQUENTLY INSPECT THE PRODUCT FOR DAMAGE.

* ADULTS MUST ASSIST CHILDREN IN THE ASSEMBLY AND INITIAL ADJUSTMENT PROCEDURES OF THE PRODUCT.

2.2 Sizing the JetKart® for your Hoverboard*

⚠ **IMPORTANT: ENSURE THAT YOUR HOVERBOARD IS POWERED OFF WHEN SIZING UP THE BRACKETS.**

- THE JETKART®'S BRACKETS REST ON THE LEFT AND RIGHT FOOTPADS OF THE HOVERBOARD. THE BRACKET LEGS MUST BE SNUG AROUND THE FRONT AND BACK EDGES OF THE HOVERBOARD SO THAT THE MIDDLE OF THE BRACKETS REST ON THE FOOT PADS.

TO CHECK FOR FIT:

1. UNFASTEN THE VELCRO STRAP FROM ONE SIDE OF EACH BRACKET.
2. REST BOTH BRACKETS (D) ACROSS THE HOVERBOARD, ONE OVER EACH FOOT PAD, FROM FRONT TO BACK. IF EITHER BRACKET IS TOO LONG OR SHORT TO SNUGLY GRIP THE EDGES OF THE HOVERBOARD, YOU WILL HAVE TO RESIZE THE BRACKETS.

CORRECT FIT:

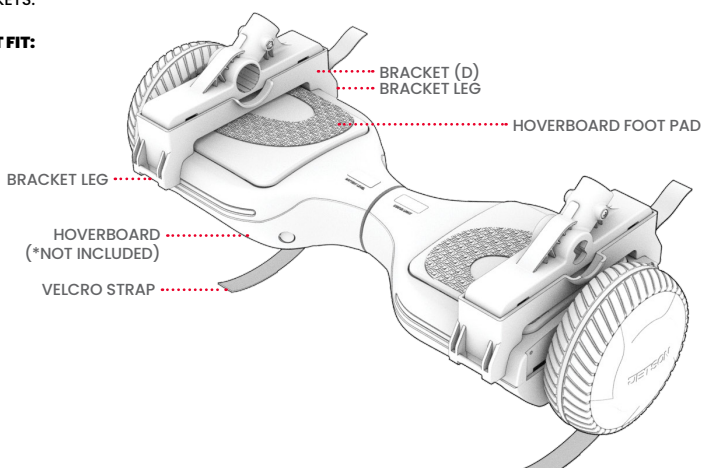

TO RESIZE THE BRACKETS:

1. REMOVE THE VELCRO STRAP FROM EACH BRACKET. SET THE STRAPS ASIDE.
2. REMOVE THE BRACKETS FROM THE HOVERBOARD.
3. LOCATE THE TWO BOLTS GOING THROUGH THE SIDES OF EACH BRACKET; THEY ARE SECURED ON THE OTHER SIDE BY A WASHER AND BOLT. (2 PER BRACKET, 4 TOTAL)
4. USING THE ALLEN KEY TIP OF THE 2-BIT TOOL TO HOLD EACH BOLT STEADY, LOOSEN AND REMOVE THE NUT OFF THE END OF THE BOLT BY TURNING IT COUNTERCLOCKWISE WITH THE WRENCH. REMOVE THE WASHER AND SLIDE THE BOLT OUT OF THE BRACKET.

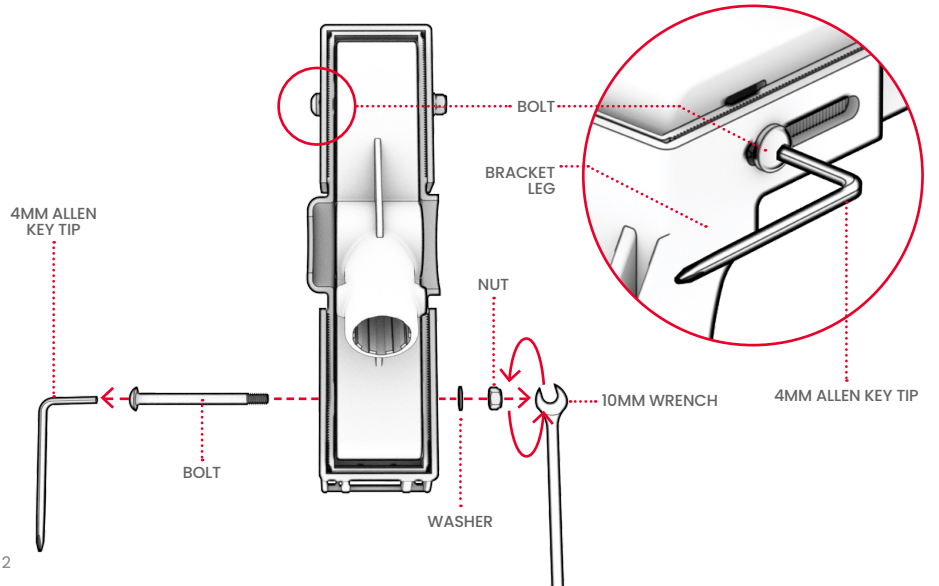

5. SET ALL HARDWARE ASIDE. (4 BOLTS, 4 NUTS, AND 4 WASHERS — 2 EACH FROM EACH BRACKET.)
6. SLIDE THE BRACKET LEGS DOWN OFF OF THE CENTER BRACKET PIECE.

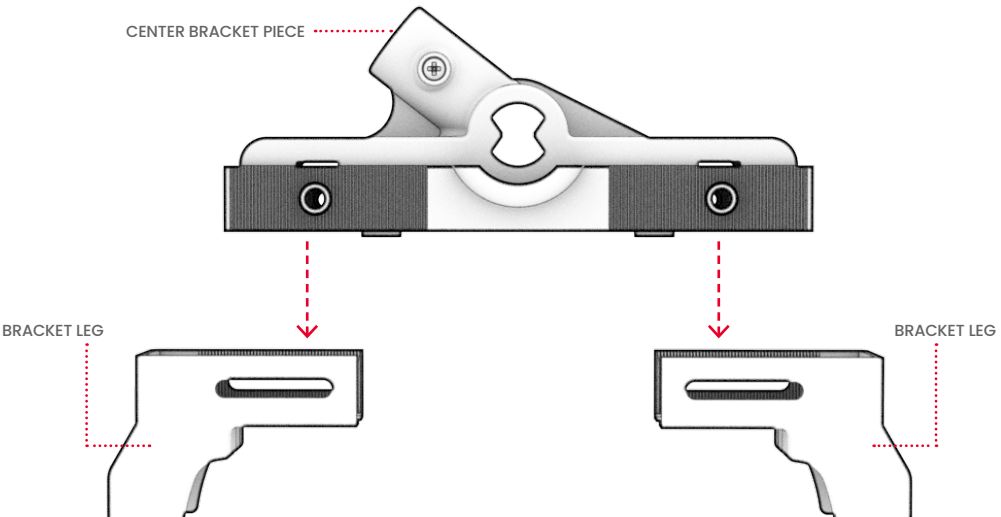

7. REPOSITION THE BRACKET LEGS CLOSER IN OR FURTHER OUT ON THE CENTER BRACKET PIECE TO RESIZE THE BRACKET FOR YOUR HOVERBOARD, AND SLIDE THEM BACK UP ONTO THE BRACKET.
8. REST THE BRACKETS ON THE HOVERBOARD TO SEE IF FURTHER ADJUSTMENTS ARE NECESSARY.
9. WHEN THE ADJUSTABLE BRACKET LEGS ARE IN THE RIGHT PLACE FOR THE SIZE OF YOUR HOVERBOARD, LIFT THE BRACKETS OFF OF THE HOVERBOARD, TAKING CARE NOT TO DISTURB THE PLACEMENT OF THE ADJUSTABLE BRACKET LEGS.

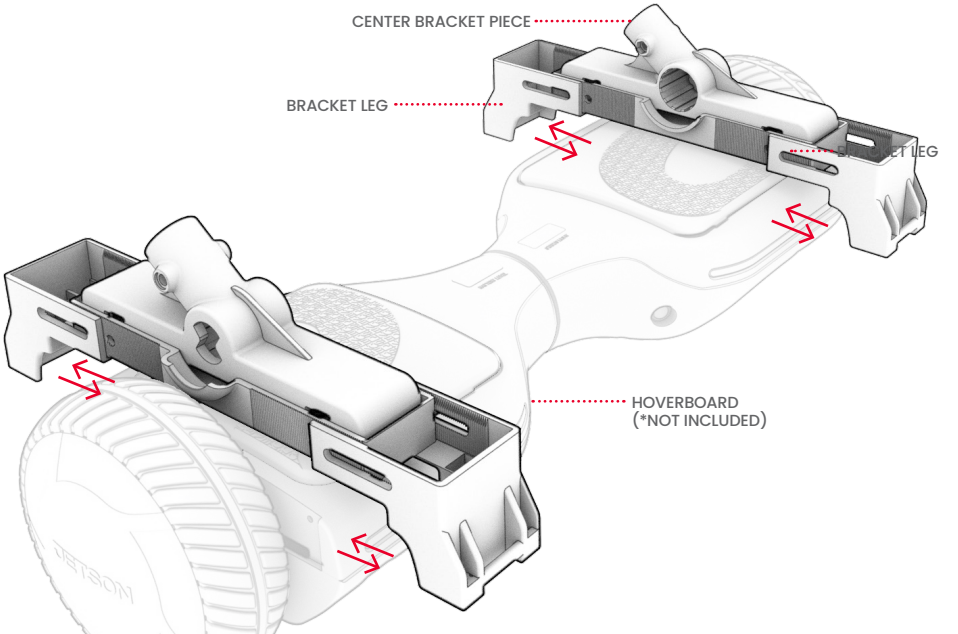

10. RE-INSERT ONE OF THE REMOVED BOLTS THROUGH THE HOLES IN THE OVERLAPPING BRACKET PIECES FROM THE SIDE OF THE BRACKET WITH THE HOURGLASS-SHAPED CUT-OUT.
11. SLIP A WASHER AND THEN TWIST A NUT ONTO THE END OF THE BOLT. USE THE 4MM ALLEN KEY TO HOLD THE BOLT STEADY WHILE YOU TIGHTEN THE NUT ALL THE WAY ONTO THE BOLT BY TURNING IT CLOCKWISE WITH THE WRENCH.

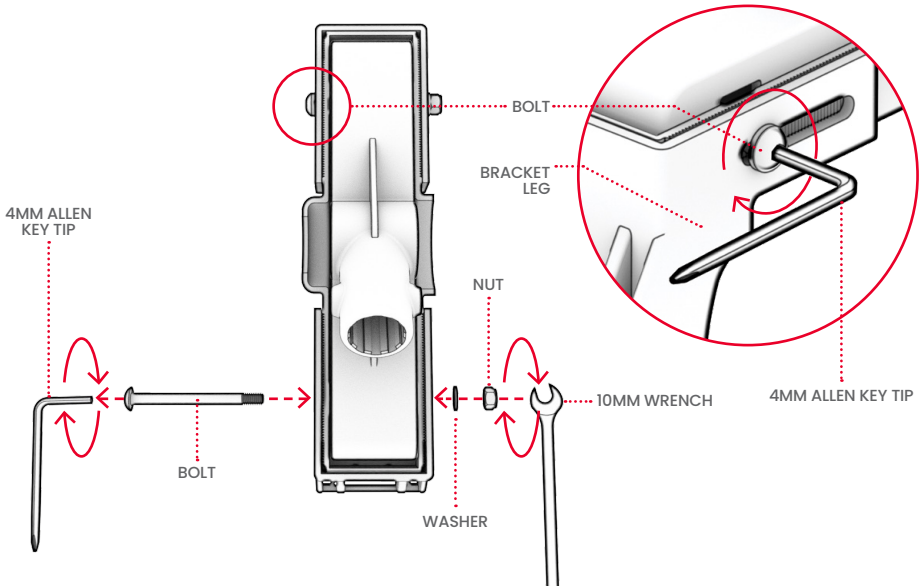

12. REPEAT STEPS 10 AND 11 WITH THE OTHER 3 HARDWARE SETS SO THAT ALL 4 ADJUSTABLE BRACKET LEGS (A) ARE SECURED ON THE CENTER BRACKET PIECE (B).
13. CHECK THAT THE BRACKET LEGS ARE SECURE.

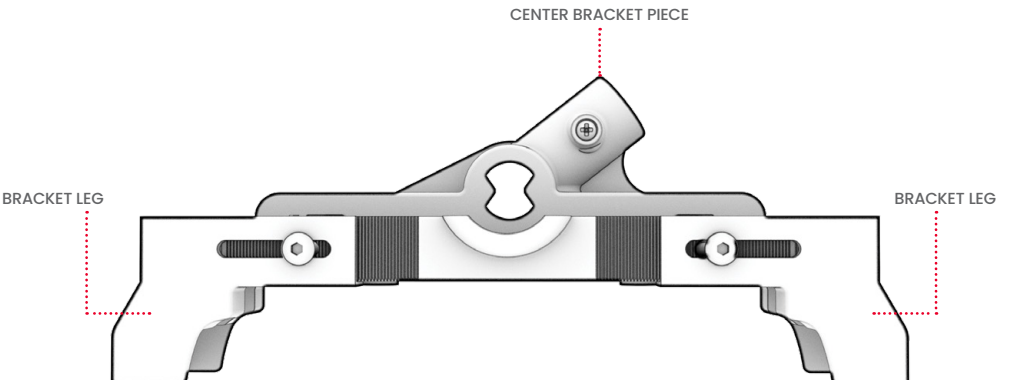

2.3 Attaching the Handles

1. INSERT ONE HANDLE (C) INTO THE HANDLE TUBE EXTENDING DIAGONALLY UPWARDS FROM THE TOP OF ONE BRACKET (D), SUCH THAT THE HANDLEBAR BENDS TOWARD THE SIDE OF THE BRACKET WITH THE HOURGLASS-SHAPED HOLE.
2. ROTATE THE HANDLE IN THE TUBE SO THAT:

- THE HANDLE BENDS TOWARDS THE SIDE OF THE BRACKET WITH THE HOURGLASS-SHAPED HOLE.
- THE TWO HOLES AT BASE OF THE HANDLE ARE ALIGNED WITH THE TWO HOLES ON THE SIDE OF THE TUBE.

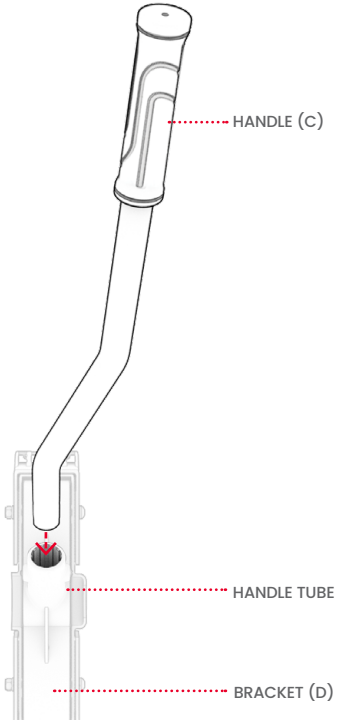

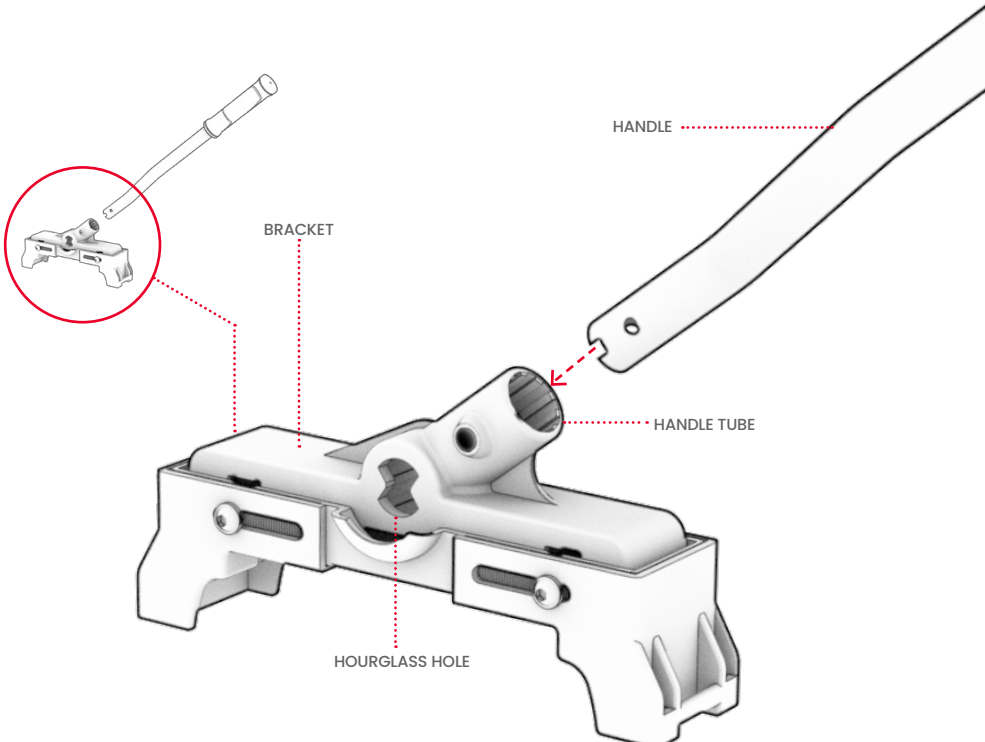
HANDLE
BRACKET
HANDLE TUBE
HOURGLASS HOLE

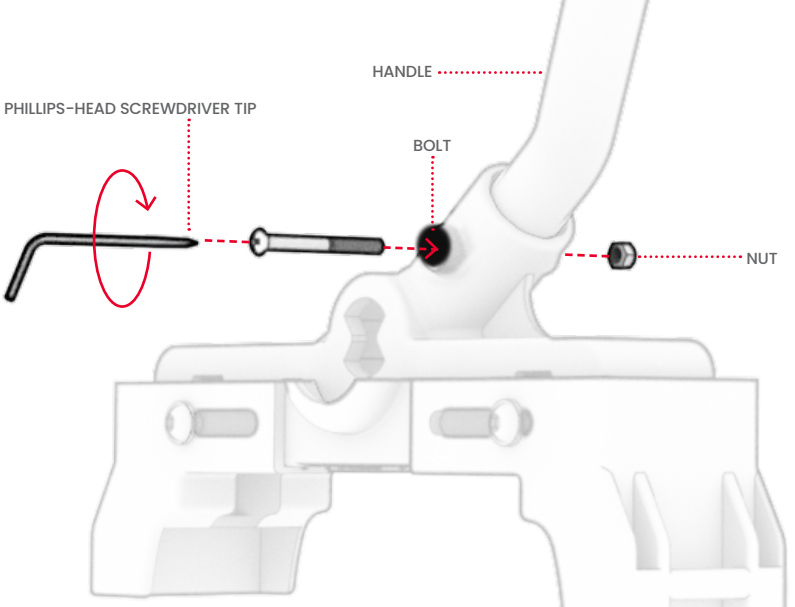

3. FROM THE SIDE OF THE BRACKET TOWARDS WHICH THE HANDLE BENDS, USE THE SCREWDRIVER-TIP OF THE 2-BIT TOOL TO TWIST ONE OF THE SMALL BOLTS CLOCKWISE INTO THE ALIGNED HOLES OF THE BRACKET TUBE AND THE HANDLE.
4. WHEN THE BOLT IS HALFWAY INSERTED, USE YOUR OTHER HAND TO POSITION A SMALL NUT ON THE OPPOSITE HOLE, WITH THE NARROWER SIDE OF THE NUT FACING IN.

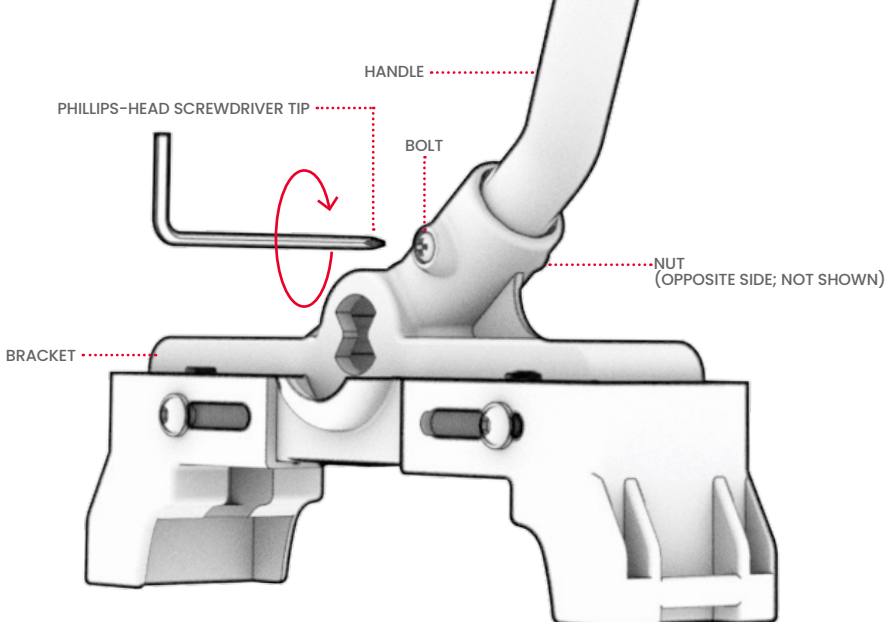

5. HOLD THE NUT STEADY AND FULLY TIGHTEN THE BOLT INTO THE NUT BY TURNING IT CLOCKWISE WITH THE SCREWDRIVER.
6. REPEAT STEPS 1-5 WITH THE OTHER BRACKET, HANDLE, BOLT, AND NUT.
7. CHECK THAT THE HANDLES ARE SECURE IN THE BRACKETS.

2.4 Attaching the Brackets

1. POSITION ONE BRACKET ON EACH SIDE OF THE SEAT BASE SUCH THAT THE HANDLES EXTEND FORWARD FROM THE SEAT BACK SUPPORT.
2. SLIDE BOTH BRACKETS ONTO THE SEAT BASE CROSSBAR.

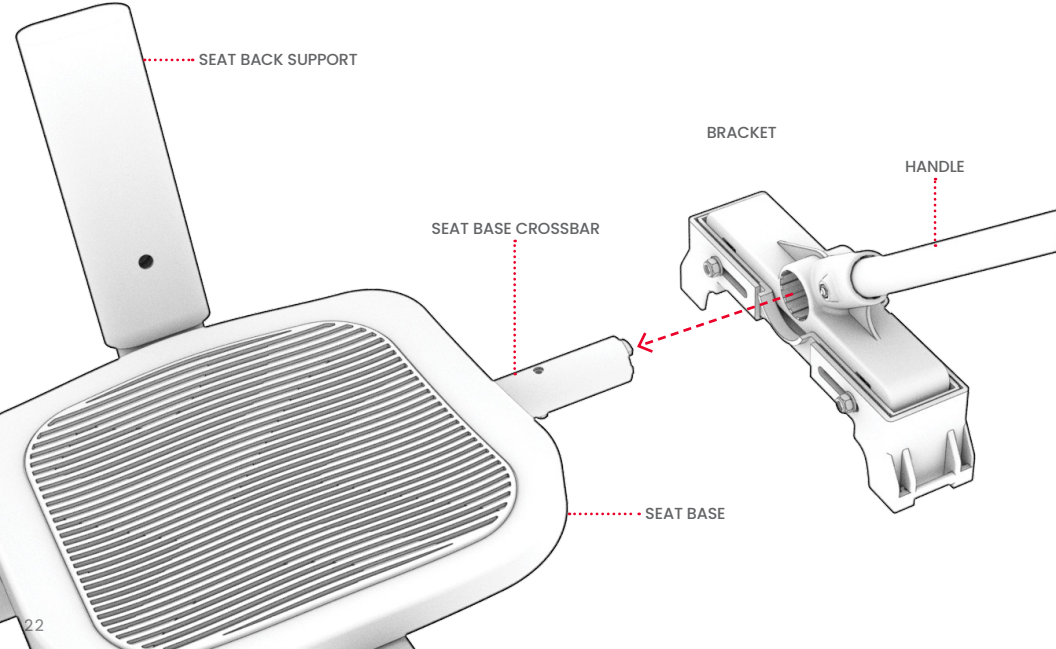

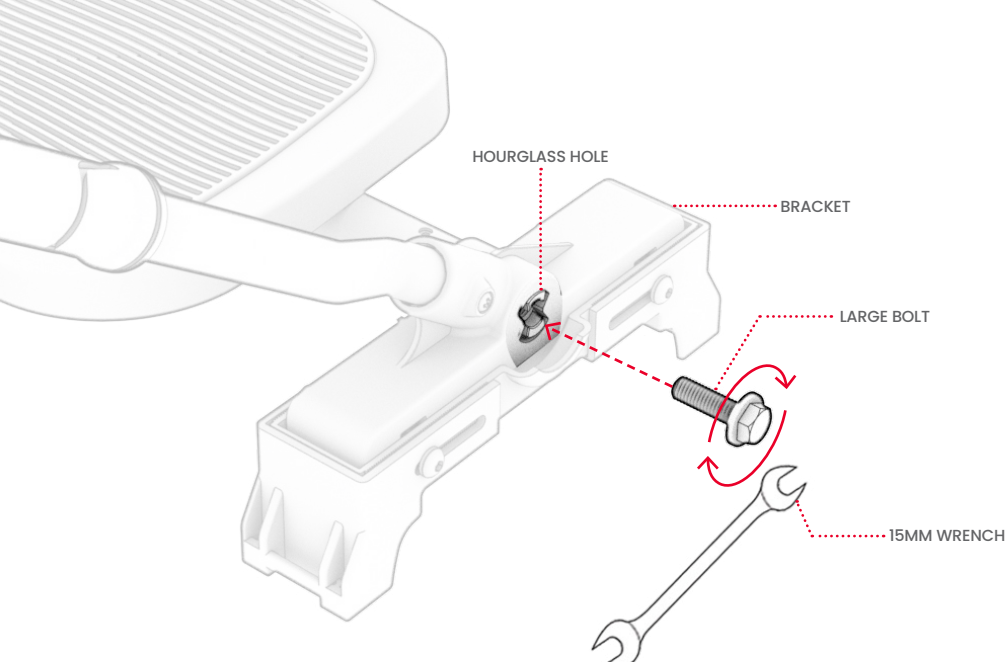

3. TWIST A LARGE BOLT CLOCKWISE INTO THE HOURGLASS-SHAPED HOLE OF EACH BRACKET. TIGHTEN THE BOLTS BY TURNING EACH ONE CLOCKWISE WITH THE 10MM WRENCH.

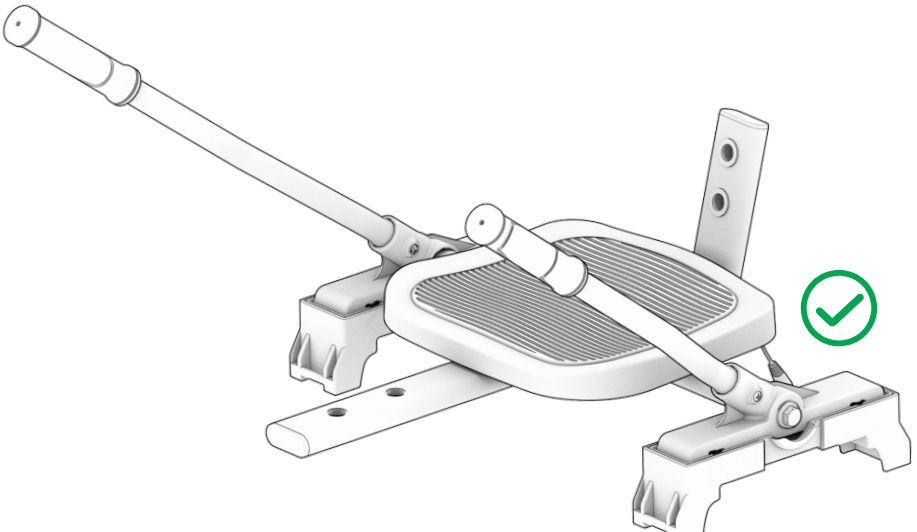

4. CHECK THAT THE BRACKETS ARE SECURE ON THE SEAT BASE.

2.5 Attaching the Seat Back

1. POSITION THE SEAT BACK (B) OVER THE REAR FRAME (A) SUCH THAT THE SEAT BACK STEM IS ABOVE THE SEAT BACK SUPPORT AND THE PADDED SEAT BACK IS FACING THE FRONT OF THE SEAT BASE.
2. SLIDE THE SEAT BACK STEM ONTO THE SEAT BACK SUPPORT.

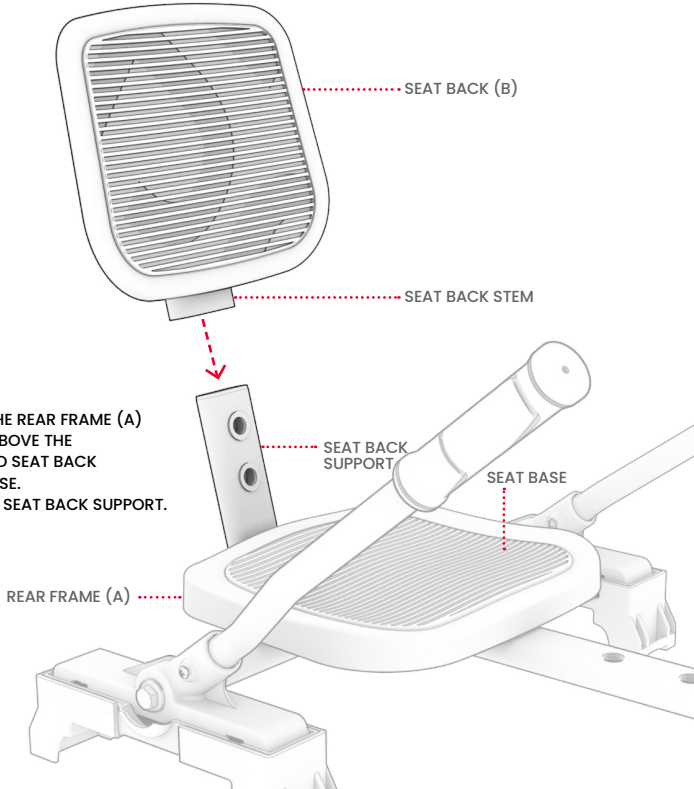

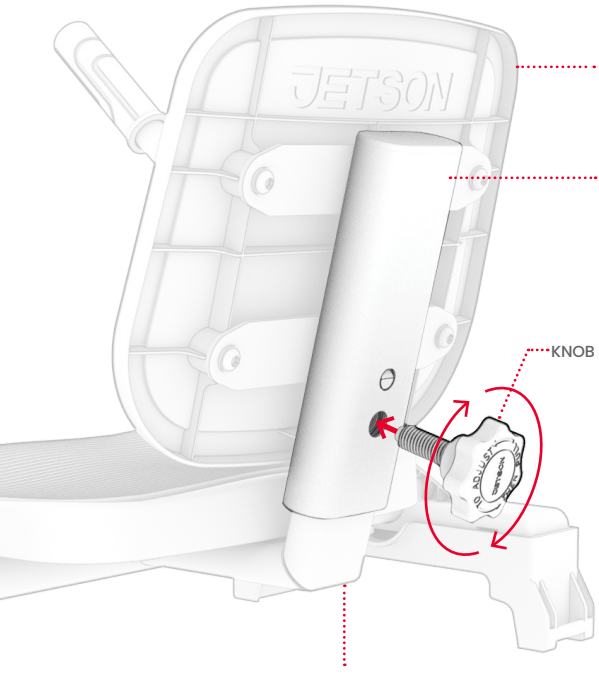

3. POSITION THE SEAT BACK SUCH THAT THE HOLE IN THE SEAT BACK SUPPORT IS ALIGNED WITH ONE OF THE HOLES IN THE SEAT BACK STEM.
4. FROM THE BACK, INSERT A KNOB INTO THE ALIGNED HOLES BY TWISTING IT IN CLOCKWISE. FULLY TIGHTEN THE KNOB.
5. CHECK THAT THE SEAT BACK IS SECURE.

2.6 Assembling the Frame

1. POSITION THE CENTER CONNECTOR (E) ON YOUR WORK SURFACE SO THAT THE SIDE WITH THE LARGER HOLES IS FACING UP.
2. POSITION THE REAR FRAME (A) AND FRONT FRAME (F) ON OPPOSITE ENDS OF THE CENTER CONNECTOR SO THAT THE FRAME BARS ARE IN LINE.
3. SLIDE THE FRAME BARS OF THE REAR FRAME AND FRONT FRAME INTO THE CENTER CONNECTOR.

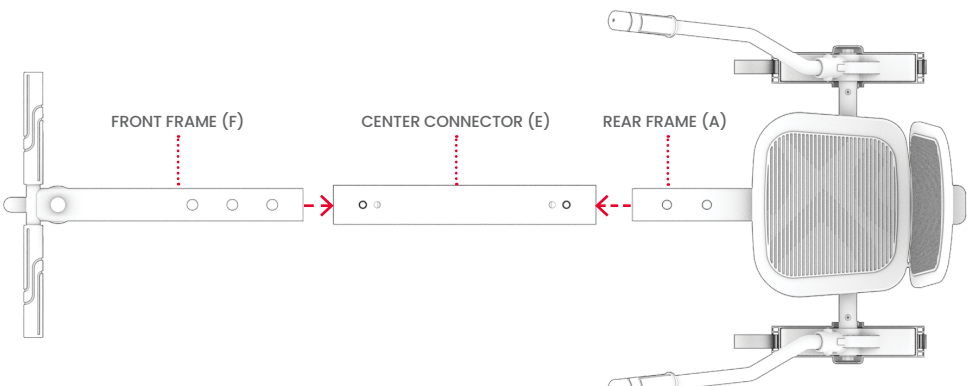

4. AS NECESSARY, ADJUST THE PIECES UNTIL THE HOLES IN THE CENTER CONNECTOR ARE ALIGNED WITH THE HOLES IN THE FRONT FRAME AND REAR FRAME BARS.

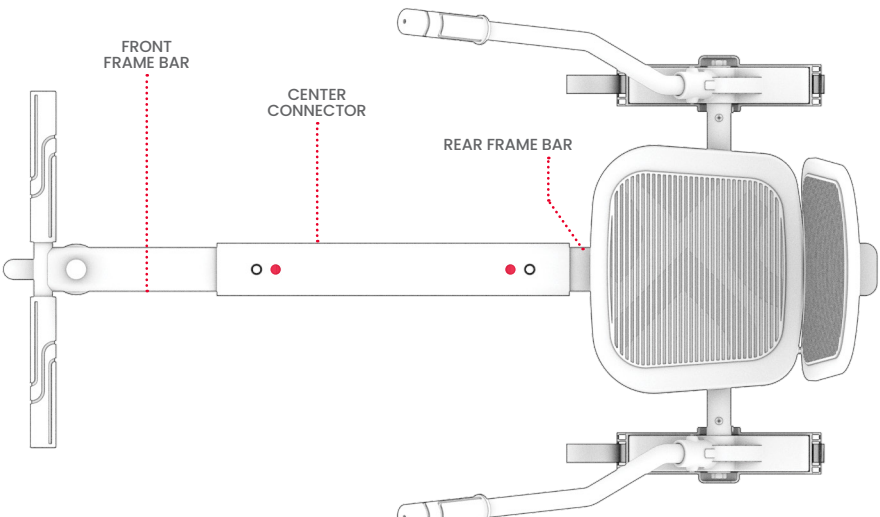

5. INSERT 1 KNOB INTO BOTH SETS OF ALIGNED HOLES AND, WHILE APPLYING A SLIGHT DOWNWARD PRESSURE ON THE KNOB, TWIST IT CLOCKWISE IT IS FULLY INSERTED.
6. CHECK THAT THE KNOBS AND FRAME PIECES ARE SECURE.

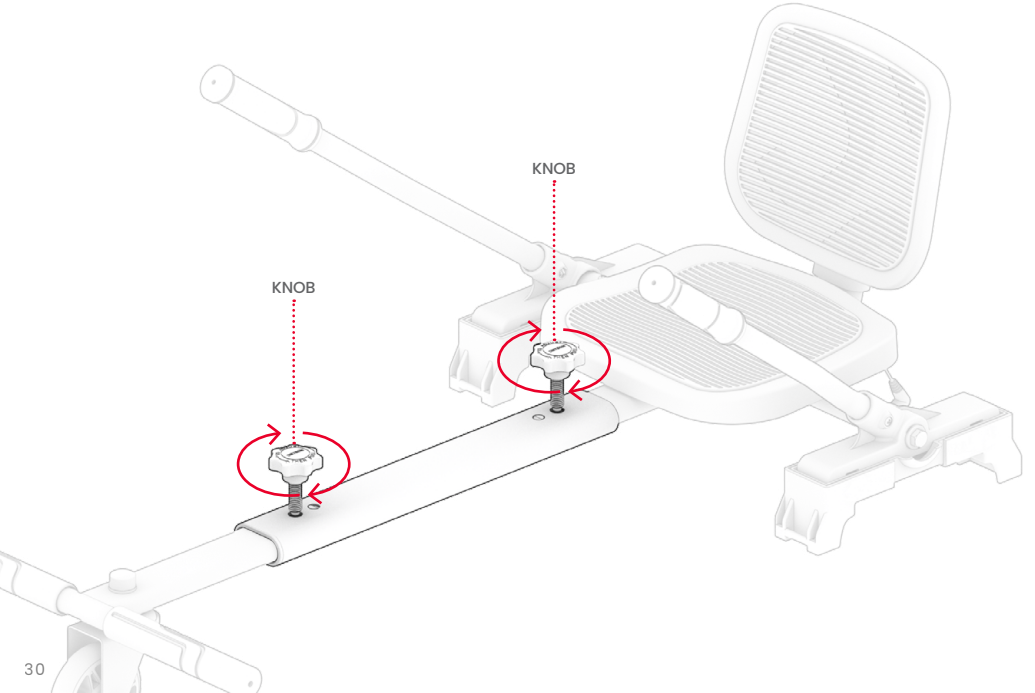

2.7 Attaching the JetKart® to your Hoverboard

⚠ **IMPORTANT:** POWER OFF YOUR HOVERBOARD BEFORE ATTACHING THE JETKART® TO IT.

1. PLACE YOUR JETKART® ON THE GROUND AND PLACE YOUR HOVERBOARD BEHIND IT SO THAT THE SIDE OF THE HOVERBOARD WITH THE POWER BUTTON IS VISIBLE FROM THE BACK OF THE JETKART®.
2. IF NECESSARY, ROTATE THE FOOTPADS ON THE HOVERBOARD SO THAT THEY ARE ALIGNED WITH ONE ANOTHER AND PARALLEL TO THE GROUND.
3. LIFT THE BACK OF THE JETKART® FRAME AND ROLL THE JETKART® TOWARDS THE HOVERBOARD. PLACE THE FRAME ONTO THE HOVERBOARD SO THAT:
   - EACH JETKART® BRACKET IS SITUATED ON ONE SIDE OF THE HOVERBOARD.
   - THE FEET OF EACH BRACKET ARE WRAPPED AROUND THE FRONT AND BACK EDGES OF THE HOVERBOARD.
   - THE CENTER OF EACH BRACKET IS RESTING ON THE HOVERBOARD FOOTPADS.

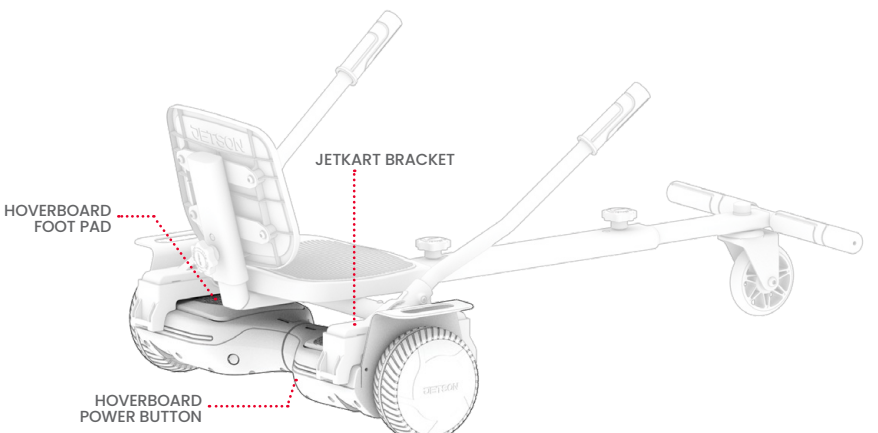

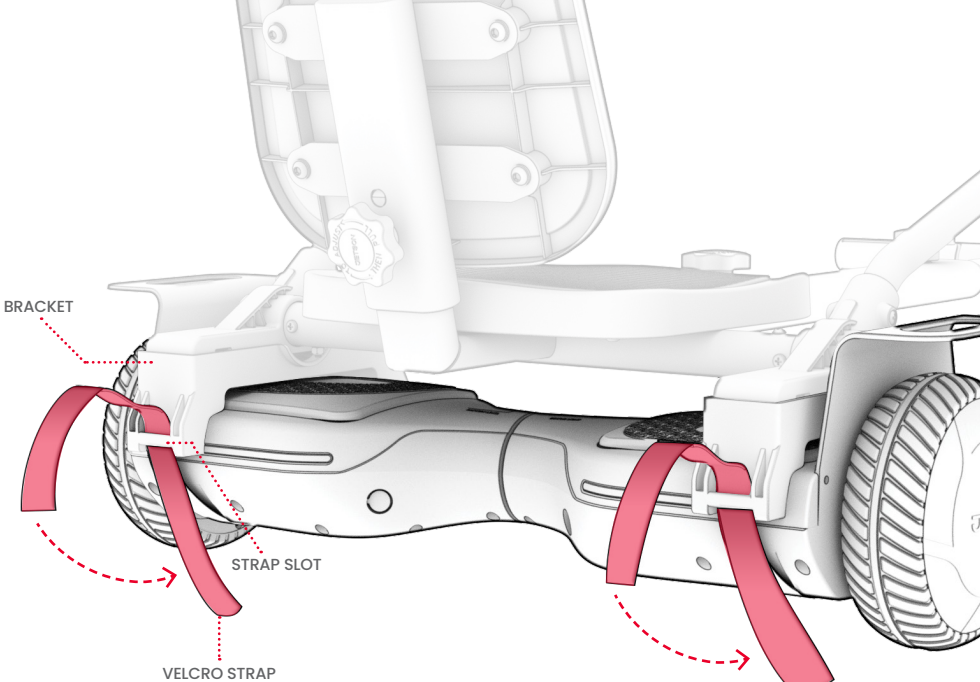

4. SLIDE A VELCRO STRAP THROUGH THE SLOT ON THE REAR OF EACH BRACKET.
5. PULL THE STRAPS TIGHT AND FOLD THE ENDS OF THE STRAPS OVER.

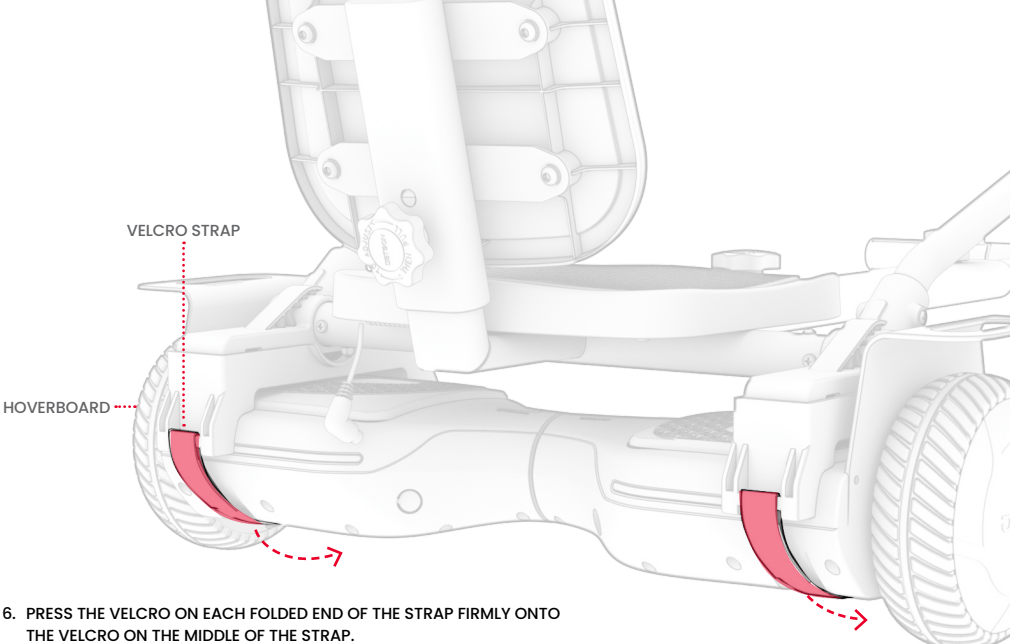

6. PRESS THE VELCRO ON EACH FOLDED END OF THE STRAP FIRMLY ONTO THE VELCRO ON THE MIDDLE OF THE STRAP.
7. WRAP THE LOOSE END OF EACH STRAP UNDER THE HOVERBOARD AND UP THROUGH THE SLOTS ON THE FRONT OF THE BRACKETS.
8. REPEAT STEPS 4 – 6 WITH THE LOOSE END ENDS OF THE STRAPS IN THE SLOTS ON THE FRONT OF THE BRACKETS.
   ⚠ **IMPORTANT:** ENSURE THAT THE STRAPS ARE TAUT.
9. CHECK THAT THE JETKART® IS SECURELY ATTACHED TO THE HOVERBOARD.

2.8 Adjusting the Length of the JetKart®

THE JETKART® CAN BE SIZED TO SUIT EACH RIDER. WHEN SEATED AND WITH FEET POSITIONED ON THE FOOTREST, A RIDER'S KNEES SHOULD BE SLIGHTLY BENT.

1. TWIST ONE OR BOTH KNOBS ON TOP OF THE CENTER CONNECTOR (B) COUNTERCLOCKWISE TO LOOSEN AND REMOVE. SET ASIDE.

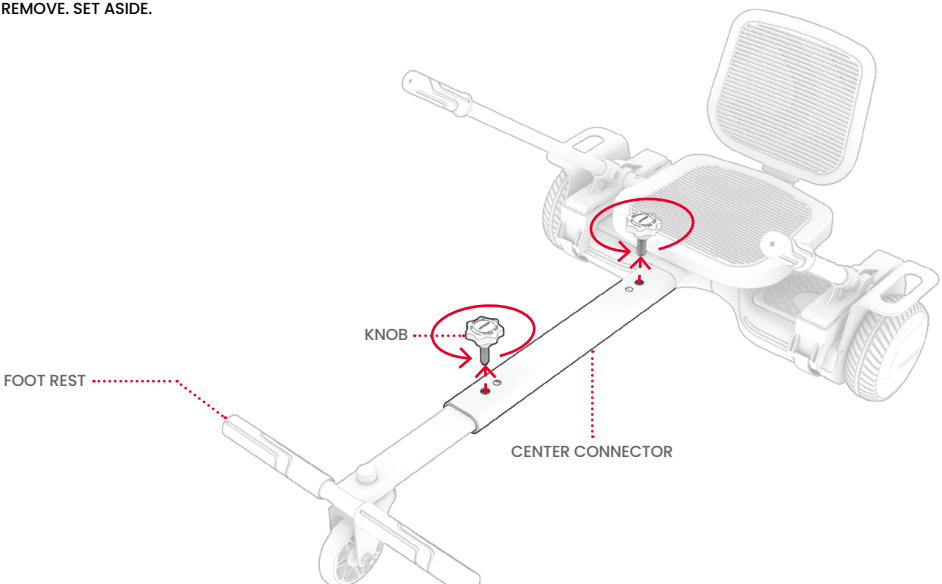

2. PUSH OR PULL TO SLIDE THE REAR FRAME (A) AND FRONT FRAME (C) IN THE CENTER CONNECTOR UNTIL THE HOLES ON TOP OF THE CENTER CONNECTOR ARE ALIGNED WITH NEW SIZING HOLES ON BOTH PARTS OF THE FRAME.

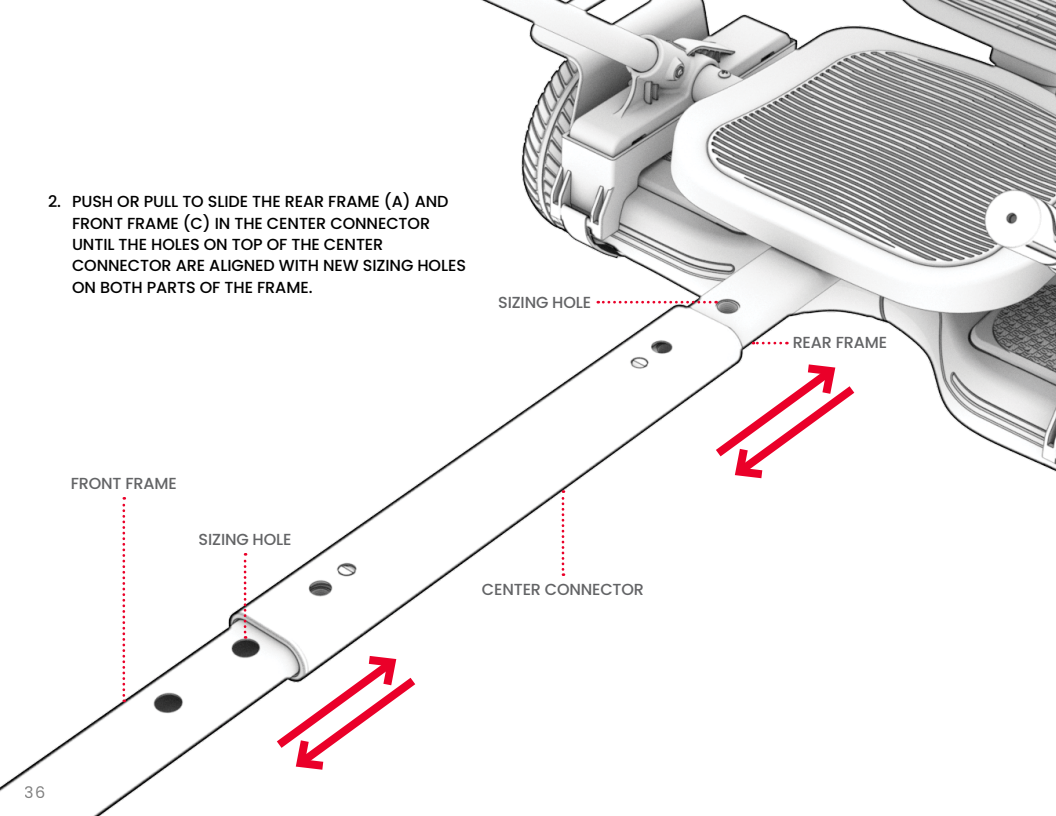

3. RE-INSERT EACH REMOVED KNOB INTO THE ALIGNED HOLES. APPLY A SLIGHT DOWNWARD PRESSURE ON THE EACH KNOB AND TWIST CLOCKWISE UNTIL IT IS FULLY INSERTED.
4. CHECK THAT THE FRAME IS SECURE.

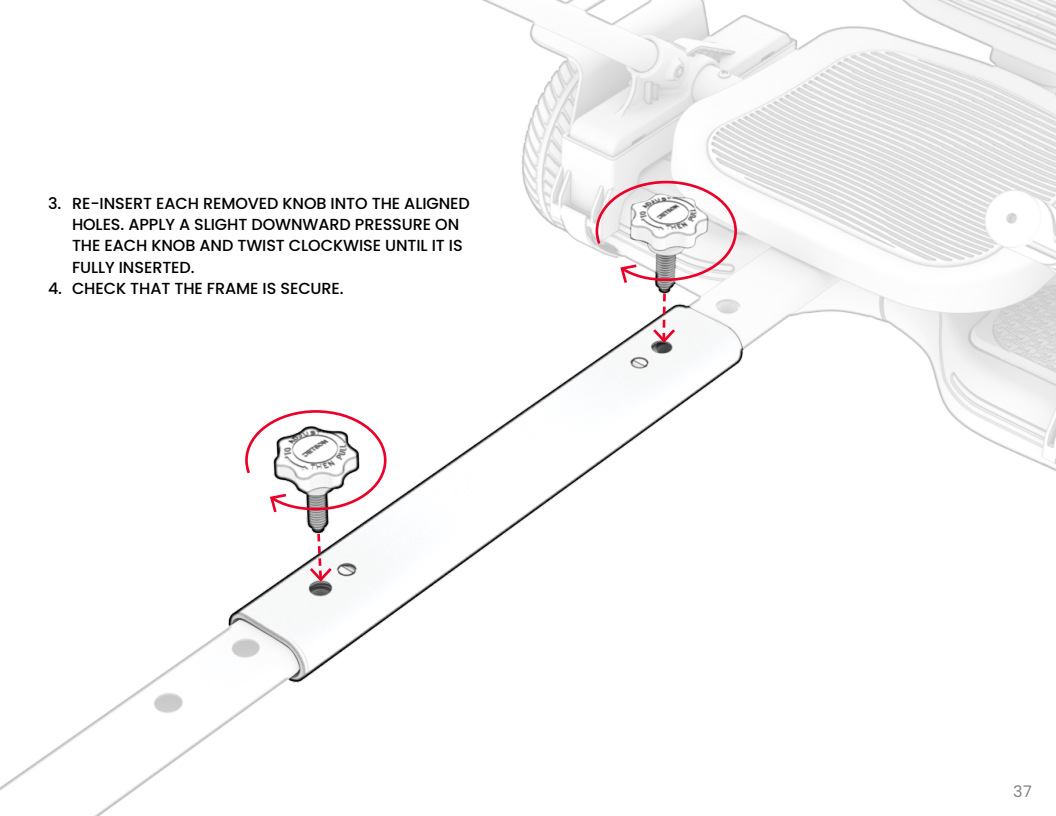

2.9 Adjusting the Height of the Seat

THE SEAT BACK CAN BE SET AT TWO POSITIONS: HIGH AND LOW.

1. REMOVE THE KNOB FROM THE SEAT BACK STEM BY TWISTING IT OUT COUNTERCLOCKWISE.

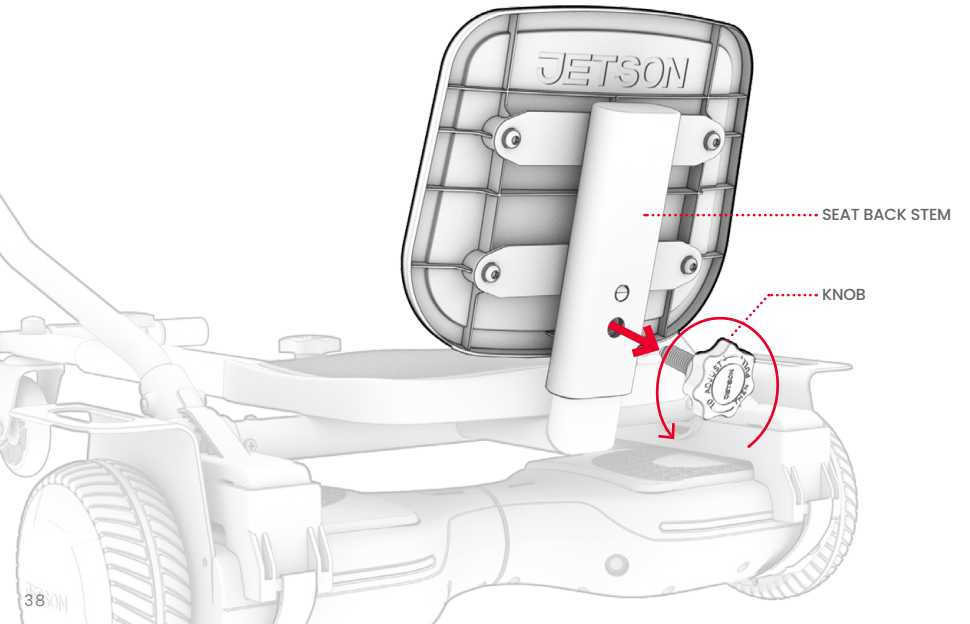

2. RAISE OR LOWER THE SEAT BACK UNTIL THE HOLE IN THE SEAT BACK STEM IS ALIGNED WITH THE OTHER SIZING HOLE ON THE REAR SIDE OF THE SEAT BACK SUPPORT.

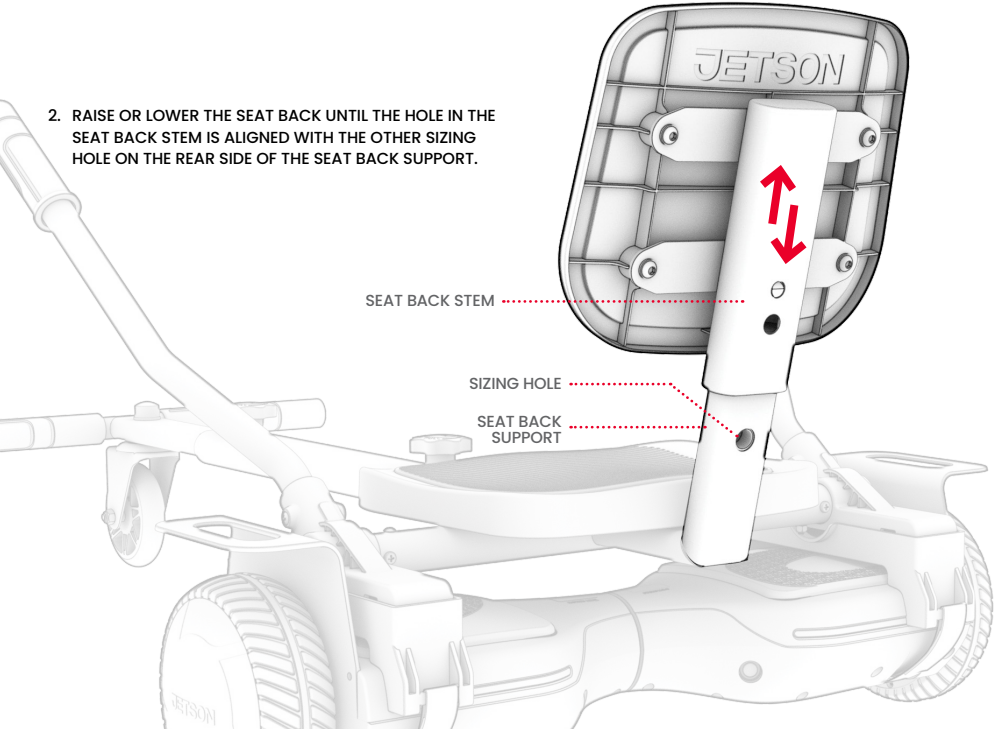

3. RE-INSERT THE KNOB INTO THE ALIGNED HOLES BY TWISTING IT IN CLOCKWISE.
4. CHECK THAT THE SEAT BACK IS SECURE.

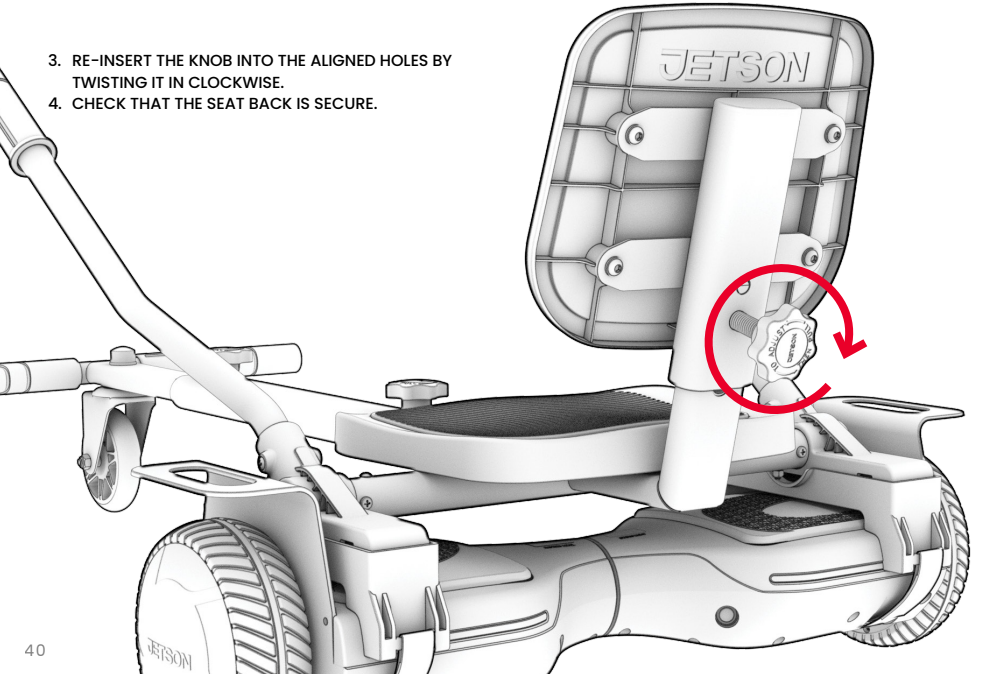

3. Making Moves

3.1 Getting on the JetKart®

⚠ **IMPORTANT: DO NOT TURN ON THE HOVERBOARD BEFORE YOU SIT DOWN. IF THE HOVERBOARD IS POWERED ON BUT NOT LEVELED WHEN YOU TURN IT ON, THE HOVERBOARD WILL PROPEL THE JETKART® FORWARD OR BACKWARD IMMEDIATELY.**

1. PLACE THE JETKART® WITH HOVERBOARD ON A FLAT SURFACE.
2. POSITION YOURSELF ON THE KART SEAT AND PLACE YOUR FEET ON THE FOOTRESTS.
3. MOVE THE HANDLES UP OR DOWN AS NECESSARY UNTIL BOTH SIDES OF THE HOVERBOARD ARE PARALLEL TO THE RIDING SURFACE.
4. CAREFULLY REACH BACK AND POWER ON YOUR HOVERBOARD.

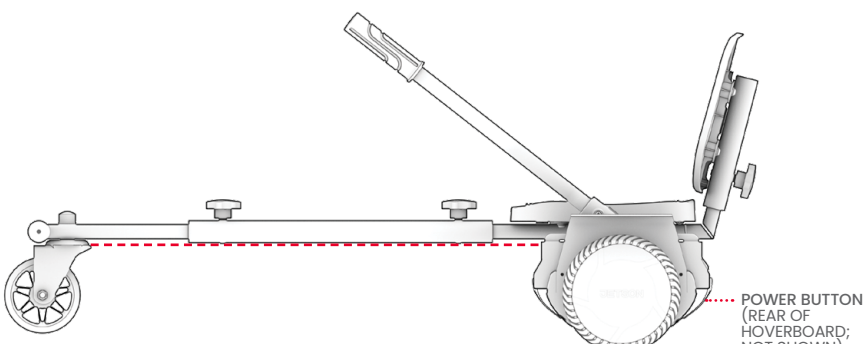

3.2 Riding the JetKart®

⚠ **IMPORTANT: TIGHTEN ALL BOLTS, NUTS, AND KNOBS BEFORE EACH RIDE.**

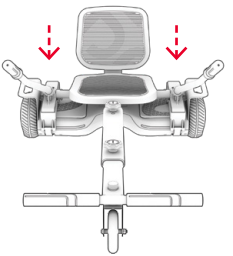

TO GO FORWARD - PUSH DOWN BOTH HANDLES

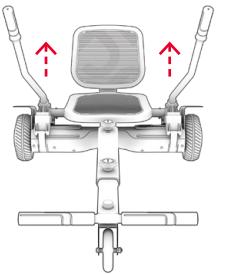

TO BRAKE/REVERSE - PULL UP BOTH HANDLES

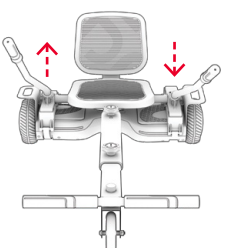

TO TURN RIGHT – PUSH DOWN LEFT HANDLE AND PULL UP RIGHT HANDLE

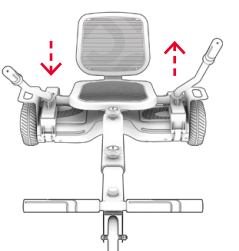

TO TURN LEFT – PULL UP LEFT HANDLE AND PUSH DOWN RIGHT HANDLE

3.3 Helmet Safety

A HELMET SHOULD BE WORN BY THE RIDER AT ALL TIMES.



PROPER POSITIONING:
THE FOREHEAD IS COVERED
BY THE HELMET.



IMPROPER POSITIONING:
THE FOREHEAD IS EXPOSED.
A FALL COULD RESULT IN SERIOUS INJURY.

*** WEAR A HELMET, APPROPRIATE CLOTHING, SHOES, AND SAFETY GEAR. AVOID CLOTHING THAT CAN GET CAUGHT INTO OR UNDER THE WHEELS. CLOSED-TOE, FLAT SHOES ARE RECOMMENDED. WEAR AN ASTM F1492 APPROVED HELMET AND PROTECTIVE GEAR TO PREVENT INJURY IN THE EVENT OF AN ACCIDENT.**

Care & Maintenance

CLEANING THE JETKART®

- TO CLEAN THE JETKART®, CAREFULLY WIPE WITH A DAMP CLOTH AND THEN DRY WITH A DRY CLOTH.
- DO NOT APPLY WATER DIRECTLY TO THE JETKART®. WATER CAN CAUSE DAMAGE TO THE FRAME, SEAT, OR WHEEL, WHICH CAN CAUSE A MALFUNCTION THAT PUTS RIDER SAFETY AT RISK.

STORING THE JETKART®

- STORE THE JETKART® INDOORS AND IN A DRY PLACE.
- COVER THE JETKART® TO PROTECT IT AGAINST DUST.

PRECAUTIONS

- KEEP AWAY FROM FIRE AND EXCESSIVE HEAT.
- AVOID INTENSE PHYSICAL SHOCK, SEVERE VIBRATION, OR IMPACT.
- RIDE THE JETKART® ON A SMOOTH, FLAT SURFACE.
- PROTECT FROM WATER OR MOISTURE.
- CONTACT THE JETSON CARE TEAM IF THERE ARE ANY ISSUES WITH THE JETKART®.

Stay connected.

Be sure to follow **@ridejetson**
on social media to learn about fantastic offers,
giveaways, and all the latest Jetson news.

Loving your ride?

Then be sure to leave a review at ridejetson.com/reviews.
We can't wait to hear from you!

JETSON

#MakeMoves

Questions? Let us help.

ridejetson.com/support
ridejetson.com/chat

To exercise your product's warranty or inquire about warranty coverage, contact us directly.

1-888-976-9904

Manufactured in Yueyang, China
Imported by Jetson Electric Bikes LLC.
P.O. Box 320149, 775 4th Ave #2,
Brooklyn, NY 11232

www.ridejetson.com

Made in China
Date Code: 07/2024
Document Edition: v1.0

© 2024, JETSON. ALL RIGHTS RESERVED. Manufactured by JETSON ELECTRIC BIKES LLC.
No portion of this document, including shape, copy, graphics, and design, may be reproduced or transmitted in any form or by any means.