A GUIDE FOR YOUR RIDE.

IMPORTANT:
Read carefully and retain for future reference.

JETSON

J5
Electric Bike.

MODEL SKU(S): JJ5-BLK

OUR TOP TWO RIDING RULES:

BE SAFE.
HAVE FUN!



MANUFACTURED IN SHENZHEN, CHINA
IMPORTED BY TRURIDE TECH LLC.
PO BOX 461, JERSEY CITY, NJ 07302-9998

DATE CODE: 09/2025
DOCUMENT EDITION: V3.0
MADE IN CHINA

© 2025, TRURIDE TECH. ALL RIGHTS RESERVED. MANUFACTURED FOR TRURIDE TECH LLC.
JETSON® IS A REGISTERED TRADEMARK USED UNDER LICENSE FROM JETSTREAM BRANDS LLC.
NO PORTION OF THIS DOCUMENT, INCLUDING SHAPE, GRAPHICS, AND DESIGN, MAY BE
REPRODUCED OR TRANSMITTED IN ANY FORM OR BY ANY MEANS.



Contents

Safety Warnings 4
Warranty Coverage & Product Registration ... 7
1. About Your Product
1.1 Product Overview 8
1.2 What's in the Box 10
1.3 Product Specs 11
1.4 Online Resources 11
2. Installation Instructions
2.1 Starting Notes 12
2.2 Rider Suitability 12
2.3 Attaching the Handlebar 13
2.4 Unfolding & Folding the Handlebar 14
2.5 Attaching & Postioning the Seat 16
2.6 Securing the Bell 17
2.7 Securing the Front Reflector 17
2.8 Charging the Battery 18
3. Preparing to Ride
3.1 Pre-Ride Safety Checks 20
3.2 Tire Inflation & Pressure 21
3.3 Unfolding & Folding the Pedals 22
3.4 Adjusting the Handlebar Height 24
3.5 Adjusting the Handlebar Rotation 25
3.6 Checking & Adjusting the Brakes 26
4. Operating Instructions
4.1 Powering On & Off 28
4.2 Checking Battery Charge Level 28
4.3 Using the Bell 29
4.4 Using the Kickstand 29
4.5 Using the Cargo Rack 30
5. Moving Instructions
5.1 Riding Your E-Bike 31
5.2 Using Electronic Pedal Assistance 31
5.3 Traditional Biking 31
5.4 Using the Throttle 32
5.5 Using the Brakes 32
5.6 Helmet Safety 33
5.7 Maximizing Speed & Riding Range 33
User Maintenance Instructions 34
Connect with Us 36

SAFETY WARNINGS.

KEEP THESE INSTRUCTIONS.

INSTRUCTIONS ON THE RISK OF FIRE OR INJURY TO PERSONS AND IMPORTANT SAFETY INSTRUCTIONS

- Before use, please read the user manual and safety warnings carefully, and make sure you understand and accept all the safety instructions. The user will be responsible for any loss or damage caused by improper use.
- **Failure to use correct charger can result in fire and explosion, resulting in property damage, injury, and death.**
- Before each cycle of operation, the operator shall perform the preoperation checks specified by the manufacturer: That all guards and pads originally supplied by the manufacturer are in proper place and in serviceable condition; That the braking system is functioning properly; That any and all axle guards, chain guards, or other covers or guards supplied by the manufacturer are in place and in serviceable condition; That tires are in good condition, inflated properly, and have sufficient tread remaining; The area that the product is to be operated should be safe and suitable for safe operation.
- Components shall be maintained and repaired in accordance with the manufacturer's specifications and using only the manufacturer's authorized replacement parts with installation performed by dealers or other skilled persons.
- Warning against recharging non-rechargeable batteries.
- Don't allow hands, feet, hair, body parts, clothing, or similar articles to come in contact with moving parts, wheels, or drive train, while the motor is running.
- This product should not be used by children or persons with reduced physical, sensory or mental capabilities, or lack of experience and knowledge, unless they have been given supervision or instruction (IEC 60335-1/A2:2006).
- Unsupervised children should not play with the product (IEC 60335-1/A2:2006).
- Adult supervision is required.
- Units shall not be operated to perform racing, stunt riding, or other maneuvers, which may cause loss of control, or may cause uncontrolled operator/passenger actions or reactions.
- Never use near motor vehicles.
- Avoid sharp bumps, drainage grates, and sudden surface changes. Scooter may suddenly stop.
- Avoid streets and surfaces with water, sand, gravel, dirt, leaves, and other debris. Wet weather impairs traction, braking, and visibility.
- Avoid riding around flammable gas, steam, liquid, or dust that could cause fire.
- Operators shall adhere to all of the manufacturer's recommendations and instructions, as well as comply with all laws and ordinances: Units without headlights shall be operated only with adequate daylight conditions of visibility, and; Owners shall be encouraged to highlight (for conspicuity) using lighting, reflectors, and for low-riding units, signal flags on flexible poles.
- Persons with the following conditions shall be cautioned not to operate: Those with heart conditions; Pregnant women; Persons with head, back, or neck ailments, or prior surgeries to those areas of the body; and persons with any mental or physical conditions that may make them susceptible to injury or impair their physical dexterity or mental capabilities to recognize, understand, and perform all of the safety instructions and to be able to assume the hazards inherent in unit use.
- Do not ride at night.

- Do not ride after drinking or taking prescription medication.
- Do not carry items when riding.
- Never operate the product barefooted.
- Always wear shoes and keep shoelaces tied.
- Make sure your feet are always placed securely on the deck.
- Operators always shall use appropriate protective clothing, including but not limited to a helmet, with appropriate certification, and any other equipment recommended by the manufacturer: Always wear protective equipment such as helmet, knee pads, and elbow pads.
- Always give way to pedestrians.
- Be alert to things in front and far away from you.
- Do not allow distractions when riding, such as answering the phone or engaging in any other activities.
- The product cannot be ridden by more than one person.
- When you ride the product along with other riders, always keep a safe distance to avoid a collision.
- When turning, be sure to maintain your balance.
- Riding with improperly adjusted brakes is dangerous and can result in serious injury or death.
- The brake may become hot while operating, do not touch the brake with your bare skin.
- Applying brakes too hard or too suddenly can lock up a wheel, which could cause you to lose control and fall. Sudden or excessive application of the brake may result in injury or death.
- If the brake loosens, please adjust with a hexagon wrench, screwdriver, or other applicable tool, or please contact the Jetson Care Team.
- Replace worn or broken parts immediately.
- Check whether all safety labels are in place and understood before riding.
- The owner shall allow the use and operation of the unit after a demonstration that such operators can understand and operate all components of the unit before use.
- Do not ride without proper training. Do not ride at high speeds, on uneven terrain, or on slopes. Do not perform stunts or turn abruptly.
- Recommended for indoor use.
- Prolonged exposure to UV rays, rain and the elements may damage the enclosure materials, store indoors when not in use.
- Personal e-mobility devices are not intended for use at high-altitude locations requiring increased clearance between electrical wires in electrical circuits, indicate that they are not intended for use at altitudes above 2,000 meters above sea level.
- Only use the battery(ies) specified by the manufacturer
- STORE INDOORS WHEN NOT IN USE. LEAVE INDOORS WHILE CHARGING OR WHEN NOT IN USE FOR DRIVING.
- **AVERTISSEMENT** - Risque d'incendie - Aucune des pieces ne peut être réparée par l'utilisateur.
- **WARNING** - Risk of Fire and Electric Shock - No User Serviceable Parts.
- Caution: Risk of Fire
- The rider should not exceed 250 lb | 113.4 kg.

MODIFICATIONS

Do not attempt to disassemble, modify, repair, or replace the unit or any components of the unit without instruction from the Jetson Care Team. This will void any warranty, and can lead to malfunctions which may cause injury.

ADDITIONAL OPERATION PRECAUTIONS

Do not lift the product off the ground while it is on and the wheels are in motion. This can result in freely spinning wheels, which may cause injury to yourself or others nearby. Do not jump on or off the product, and do not jump while using it. Always keep your feet firmly planted on the foot rest while in operation. Always check the battery charge before using.

DISPOSAL OF USED BATTERY



Battery may contain hazardous substances which could endanger the environment and human health. This symbol marked on the battery and/or packaging indicates that used battery shall not be treated as municipal waste. Batteries should be disposed of at an appropriate collection point for recycling. By ensuring the used batteries are disposed of correctly, you will help preventing potential negative consequences for the environment and human health. The recycling of materials will help to conserve natural resources. For more information about recycling of used batteries, please contact your local municipality waste disposal service.

NOTICE OF COMPLIANCE

This device complies with Part 15 of the FCC Rules. Operation is subject to the following two conditions: (1) this device may not cause harmful interference, and (2) this device must accept any interference received, including interference that may cause undesired operation. Warning: Changes or modifications to this unit not expressly approved by the party responsible for compliance could void the user's authority to operate the equipment.

NOTE: This equipment has been tested and found to comply with the limits for a Class B digital device, pursuant to Part 15 of the FCC Rules. These limits are designed to provide reasonable protection against harmful interference in a residential installation. This equipment generates, uses and can radiate radio frequency energy and, if not installed and used in accordance with the instructions, may cause harmful interference to radio communications. However, there is no guarantee that interference will not occur in a particular installation. If this equipment does cause harmful interference to radio or television reception, which can be determined by turning the equipment off and on, the user is encouraged to try to correct the interference by one or more of the following measures:

- Reorient or relocate the receiving antenna.
- Increase the separation between the equipment and receiver.
- Connect the equipment into an outlet on a circuit different from that to which the receiver is connected.
- Consult the dealer or an experienced radio/TV technician for help.
- Shielded cables must be used with this unit to ensure compliance with the Class B FCC limits.

⚠ WARNING:

Failure to comply with the following instructions may result in injury to the child or others.

- Keep small parts away from children during assembly.
- Accessory must be assembled and removed by an adult.
- Frequently inspect the product for damage.

*** ADULT ASSEMBLY IS REQUIRED.**

⚠ WARNING:

To reducte the risk of injury, adult supervision is required. Never use in roadways, near motor vehicles, on or near steep inclines or steps, swimming pools or other bodies of water; always wear shoes, and never allow more than 1 rider.

⚠ WARNING:

Always observe basic precautions when using this product, including the following:

(A) Read all instructions before using the product.

(B) To reduce risk of injury, strict supervision is essential when the product is used in closer to children.

(C) Do not insert fingers or hands into the product.

(D) Do not use this product if the elastic power cable or output cable is crunched, has breaked insulation, or has any other indications of damage.

(E) For all equipment. Instructions should state: This appliance is not intended for use in ambient temperatures below 14°F (-10°C) or above an ambient temperature of 104°F (40°C).

(F) For all devices, the instructions should include the information:
The battery is designed to be charged when the ambient temperature is between 32°F (0°C) and 104°F (40°C). Never charge the battery when the ambient temperature is outside this range.

CALIFORNIA PROPOSITION 65

⚠ WARNING:

THIS PRODUCT CAN EXPOSE YOU TO CHEMICALS INCLUDING CADMIUM, WHICH IS KNOWN TO THE STATE OF CALIFORNIA TO CAUSE CANCER AND BIRTH DEFECTS OR OTHER REPRODUCTIVE HARM.
FOR MORE INFORMATION GO TO:
WWW.P65WARNINGS.CA.GOV.

GENERAL LIMITED WARRANTY

YOUR NEW JETSON PRODUCT IS WARRANTED AGAINST DEFECTS IN MATERIALS AND WORKMANSHIP AS INDICATED ON RIDEJETSON.COM/WARRANTY FOR A PERIOD OF TIME FROM THE DATE OF ORIGINAL RETAIL PURCHASE WHEN USED IN ACCORDANCE WITH JETSON'S USER MANUALS (REFER TO RIDEJETSON.COM/SUPPORT). **UNDER THIS WARRANTY, YOU WILL BE ABLE TO DIRECT YOUR CLAIMS TO JETSON EVEN IN SITUATIONS WHERE YOU PURCHASED THE JETSON PRODUCT FROM ONE OF OUR AUTHORIZED RETAILERS.** TO READ THE FULL TERMS OF OUR WARRANTY, VISIT RIDEJETSON.COM/WARRANTY.

PRODUCT REGISTRATION

REGISTER YOUR NEW JETSON TO FAST-TRACK YOU TOWARDS PERSONALIZED PRODUCT AND WARRANTY SUPPORT. MAKE YOUR MOVE AT RIDEJETSON.COM/PAGES/REGISTRATION.

WARRANTY COVERAGE & PRODUCT REGISTRATION.

To exercise your product's warranty or inquire about warranty coverage, contact us directly.

www.ridejetson.com

1. ABOUT YOUR PRODUCT.

1.1 Product Overview

1. HANDLEBAR*
2. STEM CLAMP
3. STEM
4. FOLDING LATCH
5. WHEEL
   (×2; FRONT AND REAR)
6. WHEEL REFLECTOR
   (×2; FRONT AND REAR)
7. TIRE VALVE WITH DUST CAP
   (×2; FRONT AND REAR)
8. FENDER
   (×2; FRONT AND REAR)
9. PEDAL WITH REFLECTORS
   (×2; LEFT AND RIGHT)
10. KICKSTAND
11. CHARGING PORT WITH COVER
12. CARRYING HANDLE
13. SEAT*
14. REAR REFLECTOR
15. SEAT CLAMP
16. CARGO RACK
17. CHARGER
18. CHARGING CABLE

**REQUIRES ASSEMBLY*

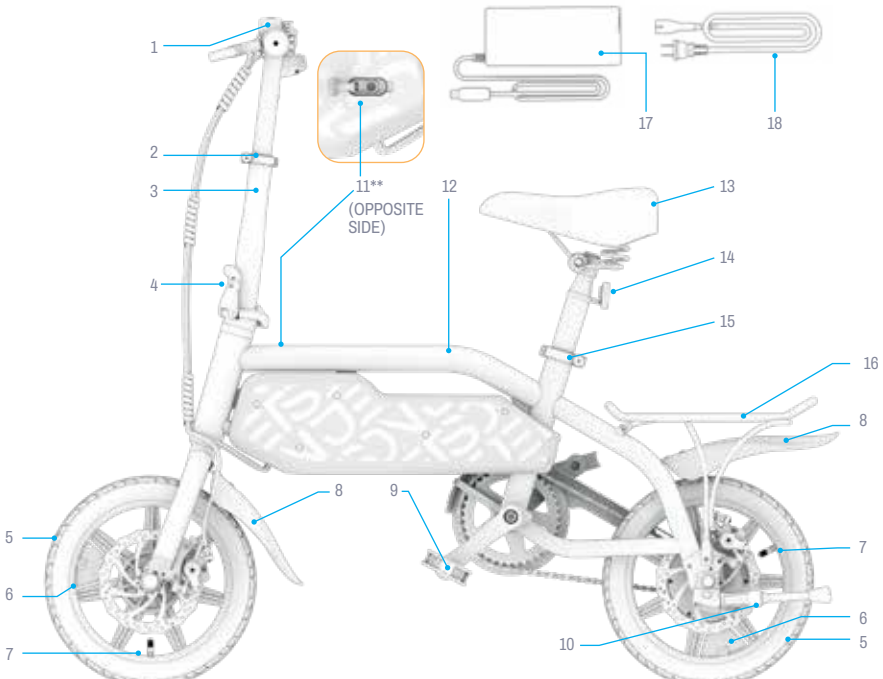

NOTE: IMAGES MAY NOT REFLECT EXACT APPEARANCE OF ACTUAL PRODUCT.
**Dependent on the date of production of your unit, the charging port may be on the right side or underside (not shown) of the frame.

1. LEFT HANDBRAKE
2. BELL
3. HANDLEBAR CLAMP
4. FRONT REFLECTOR
5. BATTERY CHARGE DISPLAY
6. RIGHT HANDBRAKE
7. POWER (⏻) BUTTON
8. ACCELERATION TWIST THROTTLE

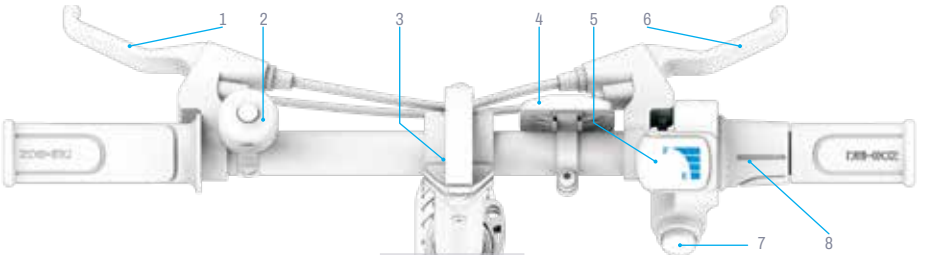

1.2 What's in the Box

TOOL INCLUDED FOR ASSEMBLY, ADJUSTMENT, AND MAINTENANCE (DEPENDENT ON PRODUCTION DATE):

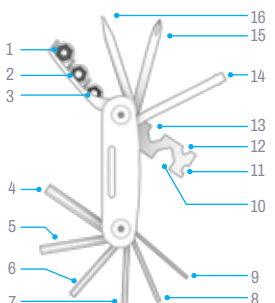

MULTI-TOOL TIP IDENTIFICATION:	
1. 10 MM SOCKET	9. 2 MM ALLEN KEY
2. 9 MM SOCKET	10. 15 MM HEX WRENCH
3. 8MM SOCKET	11. 14 GAUGE SPOKE WRENCH
4. 6 MM ALLEN KEY	12. 8 MM HEX WRENCH
5. 5 MM ALLEN KEY	13. 10 MM HEX WRENCH
6. 4 MM ALLEN KEY	14. SOCKET SCREW
7. 3 MM ALLEN KEY	15. PHILLIPS-HEAD SCREWDRIVER
8. 2.5 MM ALLEN KEY	16. FLAT-HEAD SCREWDRIVER

OR



15 MM SPANNER WRENCH

1.3 Product Specs

- WEIGHT LIMIT: 250 LB | 113.4 KG
- CARGO RACK WEIGHT LIMIT: 22 LB | 9.97 KG
- PRODUCT WEIGHT: 39.5 LB | 17.7 KG
- RECOMMENDED AGE: 12+
- PRODUCT DIMENSIONS, UNFOLDED:
  47.0 IN (L) × 21.0 IN (W) × 43.0 IN (H) | 119.4 CM (L) × 53.3 CM (W) × 109.2 CM (H)
- PRODUCT DIMENSIONS, FOLDED:
  47.0 IN (L) × 11.0 IN (W) × 31.0 IN (H) | 119.4 CM (L) × 27.9 CM (W) × 78.7 CM (H)
- TIRE SIZE: 14.0 IN (H) × 1.95 IN (W) | 35.6 CM (H) × 4.95 CM (W)
- MAX SPEED: 15.5 MPH | 24.9 KM/H*
- MAX PEDAL ASSIST RANGE: 30 MILES | 48.2 KM *
- MAX THROTTLE RANGE: 15 MILES | 24.1 KM *
- BRAKE TYPE: FRONT AND REAR DISC
- BATTERY: 36 V, 6.0 AH
- BATTERY TYPE: LITHIUM-ION
- MOTOR: 350W**
- CHARGER OUTPUT: 42VDC, 1.5A MAX
- CHARGER VOLTAGE: UL 100 - 240V
- CHARGING TIME: APPROX. 5 HOURS
- RECOMMENDED TIRE PRESSURE: 35 - 45 PSI
- UL CERTIFICATION: 2849

**PRODUCT RANGE, SPEED, BATTERY LIFE, AND OTHER SPECIFICATIONS MAY VARY BASED ON RIDER AND RIDING CONDITIONS.*

***PEAK POWER*

1.4 Online Resources

Scan for our most updated product onboarding materials and support resources.

Find this user manual online at https://cdn.shopify.com/s/files/1/2530/6734/files/J5-MANUAL-web-1740418892670.pdf

Find our collection of user manuals at https://ridejetson.com/pages/product-manuals

2. INSTALLATION INSTRUCTIONS.

2.1 Starting Notes

- KICK OFF YOUR ADVENTURE RIGHT. PRIOR TO USE OF THIS PRODUCT, CAREFULLY READ THE ENTIRE USER MANUAL, INCLUDING SAFETY WARNINGS. MAKE SURE YOU UNDERSTAND, ACCEPT, AND ADHERE TO ALL:
  - MANUFACTURER'S RECOMMENDATIONS.
  - SAFETY INSTRUCTIONS AND WARNINGS.
  - LOCAL RIDING AND OPERATIONAL LAWS AND ORDINANCES.

- TAKE CARE WHEN UNBOXING, AS THE HANDLEBAR WILL ONLY BE SEMI-ATTACHED. REMOVE ALL PACKAGING AND PROP THE E-BIKE UPRIGHT ON ITS KICKSTAND PRIOR TO ASSEMBLY. (REFER TO SECTION 4.4)

- THE DIRECTIONS GIVEN IN THIS MANUAL—RIGHT, LEFT, FRONT/FORWARD, AND REAR/BACK—ARE ORIENTED AS THE RIDER WOULD SEE THEM WHEN SEATED ON THE E-BIKE. THE "RIGHT SIDE" OF THE E-BIKE, FOR EXAMPLE, IS THE SIDE WHERE THE RIDER'S RIGHT HAND WILL BE.

2.2 Rider Suitability

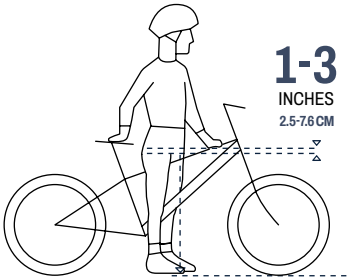

For safe and comfortable riding, there should be a clearance of at least 1-3 inches (2.5-7.6 cm) between the crotch and the top tube of the bike frame when the rider straddles the product with both feet flat on the ground.

2.3 Attaching the Handlebar

⚠ **WARNING:** Handle the semi-attached handlebar with caution. Take care not to tug or tangle the wiring connecting the handlebar to the frame.

1. PROP THE E-BIKE UP ON ITS KICKSTAND. (SECTION 4.4)
2. LIFT THE STEM TUBE SLIGHTLY SO THAT IT IS NO LONGER TOUCHING THE FRAME BUT IS NOT FULLY UPRIGHT. DO NOT YET CLOSE THE FOLDING LATCH.
3. PULL OPEN THE LATCH ON THE STEM CLAMP.
4. SLIDE THE HANDLEBAR STEM INTO THE STEM TUBE UNTIL THE "MINIMUM INSERTION" MARK IS NO LONGER VISIBLE ABOVE THE STEM CLAMP.
5. HOLD THE STEM TUBE UPRIGHT AND CLOSE THE THE STEM CLAMP LATCH.
6. CHECK THAT THE HANDLEBAR IS SECURE IN THE STEM TUBE. IF THE HANDLEBAR STEM SLIDES IN THE STEM TUBE, TIGHTEN THE STEM CLAMP BY TURNING THE KNOB CLOCKWISE.

⚠ **WARNING:** To avoid a collapsing of the handlebar post into the stem tube that could result in injury, ensure that the clamp is secure around the stem tube.

TROUBLESHOOTING:

- If the stem clamp opening is too narrow to receive the handlebar stem, widen the clamp by turning the clamp knob counterclockwise for 1-2 rotations while you hold the latch steady.
- If you cannot close the latch with ease, the clamp is too tight. Loosen the clamp by turning the knob counterclockwise for ½ rotation at a time until you can close the latch.

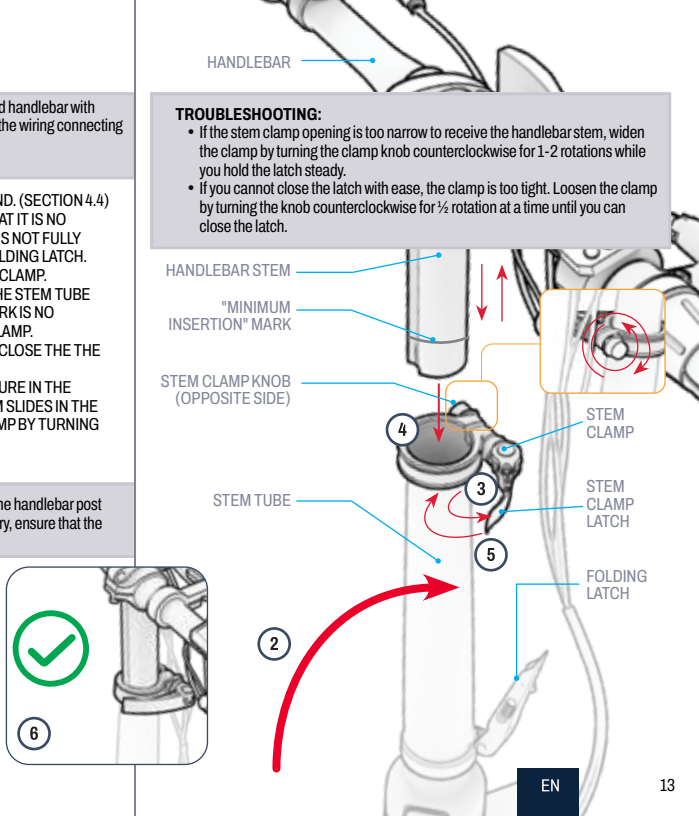

2.4 Unfolding & Folding the Handlebar

WHEN TO UNFOLD: FOR SETUP AND RIDING
WHEN TO FOLD: FOR STORAGE AND TRANSPORT

⚠ **WARNING:** To avoid a collapsing of the stem that could result in injury, never ride your e-bike without the handlebar upright and the stem folding latch securely closed.

To Unfold:

1. GENTLY RAISE THE HANDLEBAR UNTIL THE STEM IS RESTING VERTICALLY ON THE STEM BASE..
2. FORCEFULLY PUSH THE FOLDING LATCH IN UNTIL IT CLICKS INTO THE CLOSED (LATCHED) POSITION AGAINST THE STEM.
3. CHECK THAT THE STEM IS SECURED BY ENSURING THAT THE LATCH CANNOT BE PULLED OPEN.

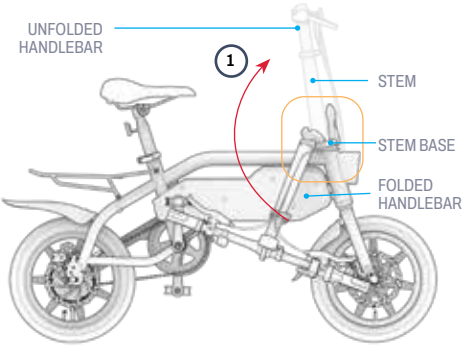

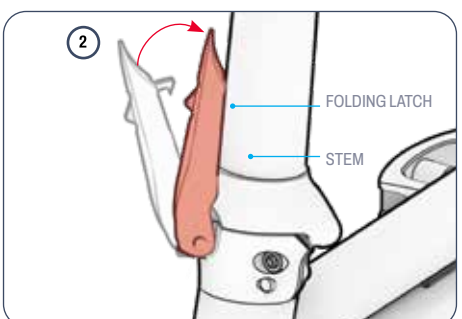

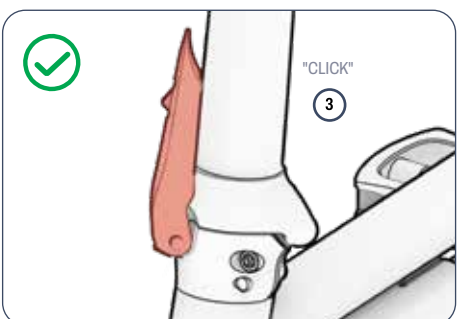

To Fold:

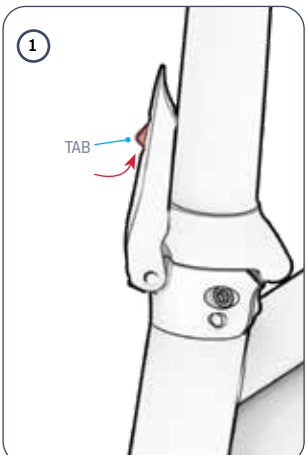

1. PUSH THE TAB ON THE FOLDING LATCH IN.

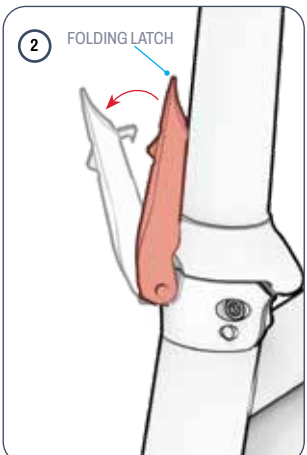

2. WITH THE TAB PUSHED IN, FORCEFULLY PULL THE FOLDING LATCH OPEN.

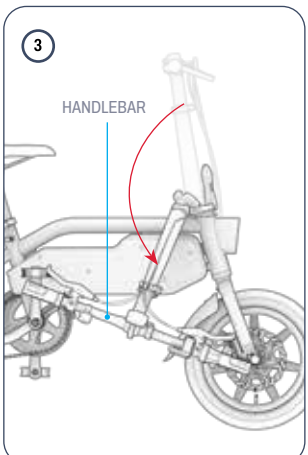

3. GENTLY LOWER THE HANDLEBAR DOWN TOWARDS THE SIDE OF THE BIKE OPPOSITE THE LATCH.

2.5 Attaching & Positioning the Seat

1. PULL OPEN THE LATCH ON THE SEAT CLAMP.
2. LOCATE THE "MINIMUM INSERTION" MARK NEAR THE BOTTOM OF THE SEAT POST.
3. HOLD THE SEAT IN POSITION ABOVE THE BIKE, WITH THE WIDEST PART OF THE SEAT AT THE REAR.
4. LOWER THE SEAT POST DOWN THROUGH THE CLAMP AND INTO THE SEAT TUBE UNTIL THE "MINIMUM INSERTION" MARK IS BELOW THE CLAMP.

⚠ **WARNING:** If the "minimum insertion" mark is visible above the seat clamp, the seat post is not deep enough in the seat tube. To avoid injury, always ensure that the seat post is inserted past the "minimum insertion" mark.

5. WHILE HOLDING THE SEAT AT THE DESIRED HEIGHT, CLOSE THE LATCH ON THE SEAT CLAMP. IF NECESSARY, TIGHTEN THE CLAMP BY TURNING THE KNOB CLOCKWISE.

6. CHECK THAT THE SEAT IS SECURE: USE YOUR HAND TO PUT DOWNWARD PRESSURE ON THE SEAT. IF THE SEAT POST SLIPS FURTHER DOWN INTO THE TUBE, BRING IT BACK TO POSITION AND TIGHTEN THE CLAMP BY TURNING THE KNOB CLOCKWISE.

⚠ **WARNING:** To avoid a collapsing of the seat post into the seat tube that could result in injury, ensure that the clamp is secure around the seat post.

TROUBLESHOOTING:

- If the post cannot fit through the clamp, widen the clamp opening by turning the clamp knob counterclockwise.
- If you cannot open or close the clamp latch, the knob may be too tight. Loosen the knob by turning it counterclockwise for ½ rotation at a time until you can utilize the latch.

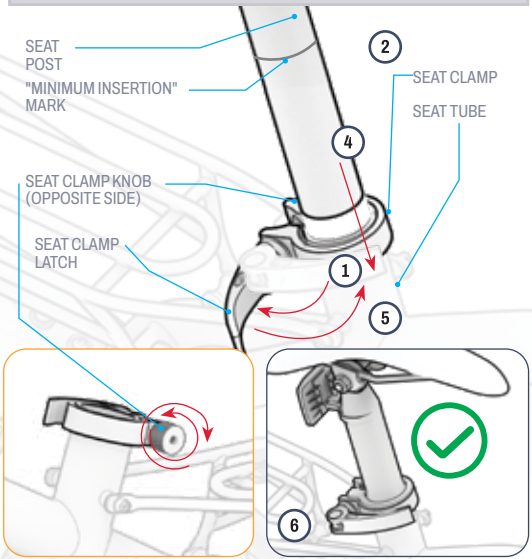

2.6 Securing the Bell

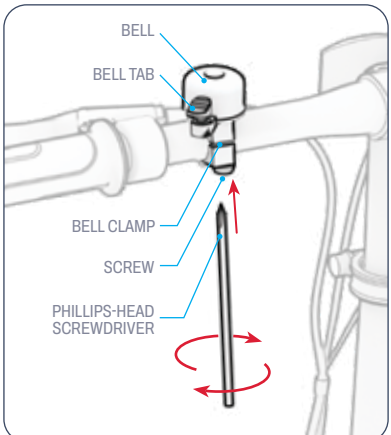

YOU WILL NEED A PHILLIPS-HEAD SCREWDRIVER (INCLUDED ON MULTI-TOOL WITH SOME MODELS).

1. LOOSEN (BUT DO NOT REMOVE) THE SCREW ON THE BELL CLAMP BY TURNING IT COUNTERCLOCKWISE FOR 1 - 2 ROTATIONS WITH A PHILLIPS-HEAD SCREWDRIVER.
2. ROTATE THE BELL AROUND THE HANDLEBAR UNTIL THE BELL TAB IS IN A PLACE THAT CAN EASILY BE REACHED BY THE RIDER'S LEFT-HAND THUMB WHILE HOLDING ONTO THE HANDLEBAR.
3. WHILE HOLDING THE BELL IN THAT POSITION, TIGHTEN THE CLAMP BY TURNING THE SCREW CLOCKWISE WITH THE SCREWDRIVER.

2.7 Securing the Front Reflector

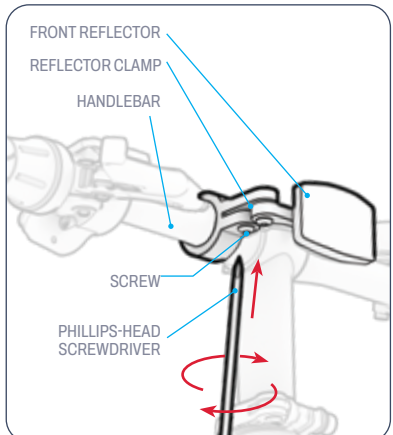

1. ROTATE THE FRONT REFLECTOR CLAMP AROUND THE HANDLEBAR UNTIL THE REFLECTOR IS FACING THE FRONT OF THE BIKE.
2. SLIDE THE REFLECTOR TOWARDS THE CENTER OF THE HANDLEBAR UNTIL THE REFLECTOR CLAMP FEELS SNUG ON THE THICKER PART OF THE HANDLEBAR.
3. IF NECESSARY, TIGHTEN THE CLAMP ON THE HANDLEBAR FURTHER BY TURN THE SCREW CLOCKWISE WITH A PHILLIPS-HEAD SCREWDRIVER.

2.8 Charging the Battery

1. CONNECT THE CHARGING CABLE WITH THE CHARGER.
2. PULL OPEN THE CHARGING PORT COVER ON YOUR E-BIKE.
3. PLUG THE CHARGING CABLE INTO THE WALL, AND THEN PLUG THE CHARGER INTO THE CHARGING PORT.
4. WHEN THE INDICATOR LIGHT ON THE CHARGER TURNS FROM RED TO GREEN, YOUR BATTERY HAS REACHED FULL CHARGE. REMOVE THE CHARGER FROM THE CHARGING PORT AND UNPLUG THE CABLE FROM THE WALL OUTLET.
5. CLOSE THE CHARGING PORT COVER.

CHARGING INDICATOR LIGHT ON THE CHARGER:	STATUS
RED ILLUMINATION	CHARGING
GREEN ILLUMINATION	CHARGING COMPLETE

NOTE: It can take approximately 5 hours to bring the battery to full charge. Fully charge the battery prior to first use.

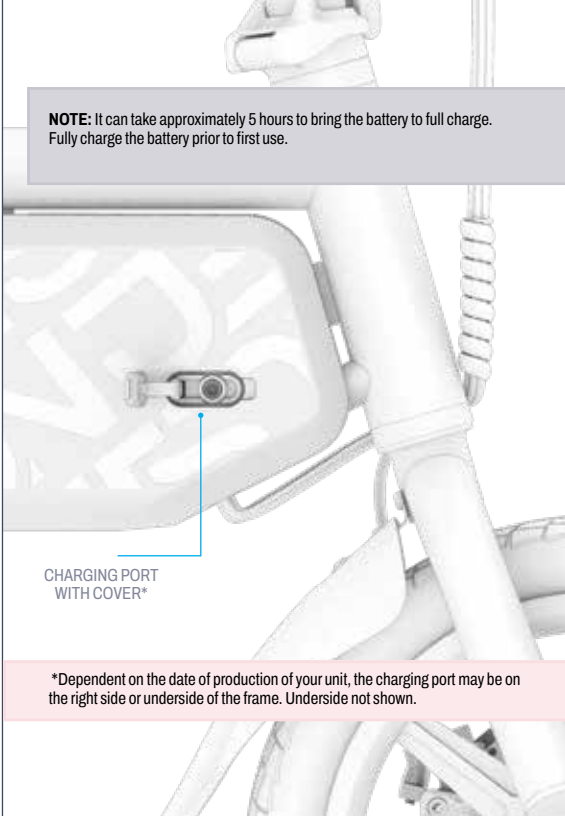

*Dependent on the date of production of your unit, the charging port may be on the right side or underside of the frame. Underside not shown.

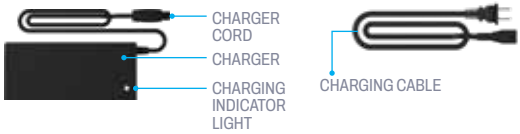

Important Charging Notes:

- ALWAYS KEEP THE CHARGING PORT CLOSED WHEN NOT ACTIVELY CHARGING THE BATTERY.
- NEVER TURN ON THE PRODUCT WHILE IT IS CHARGING.
- DO NOT USE RELOCATABLE POWER TAPS.
- FOR BEST BATTERY HEALTH, CHARGE THE BATTERY FULLY DURING EACH CHARGING SESSION—ABOUT 5 HOURS.
- NEVER LEAVE YOUR PRODUCT CHARGING OVERNIGHT OR FOR EXTENDED PERIODS OF TIME.
- DO NOT ATTEMPT TO REMOVE OR DISASSEMBLE THE BATTERY.
- CHARGING AMBIENT TEMPERATURE RANGE: 32°F (0°C) - 104°F (40°C)
- OPERATING AMBIENT TEMPERATURE RANGE: 32°F(0°C)-104°F(40°C)
- ALWAYS KEEP THE CHARGING PORT COVER CLOSED WHEN NOT ACTIVELY CHARGING THE PRODUCT.
- DO NOT USE THIS PRODUCT IF THE FLEXIBLE POWER CORD OR OUTPUT CABLE IS FRAYED, HAS BROKEN INSULATION , OR ANY OTHER SIGNS OF DAMAGE.
- CHECK THAT THE CHARGER MODEL NUMBER ON THE CHARGER LABEL MATCHES THE CHARGER MODEL NUMBER LISTED ABOVE.
- CHECK THAT THE CHARGER LABEL IDENTIFIES THE CHARGER AS COMPATIBLE WITH YOUR JETSON MODEL. YOU CAN FIND YOUR JETSON MODEL'S NAME AND SKU ON A LABEL ADHERED TO THE TOP, SIDE, OR UNDERSIDE OF THE PRODUCT'S FRAME OR STANDING DECK.

IMPORTANT:

ONLY USE THE INCLUDED CHARGER OR ONE OBTAINED DIRECTLY THROUGH JETSON LABELED WITH PS65D420Y1500S OR THE PART SKU PJJ5-CH-F2 OR PJJ5-CH.

⚠ **WARNING: FAILURE TO USE CORRECT CHARGER CAN RESULT IN FIRE AND EXPLOSION, RESULTING IN PROPERTY DAMAGE, INJURY, AND DEATH.**



THIS IS AN EXAMPLE OF THE MARKING YOUR CHARGER WILL HAVE.

3. PREPARING TO RIDE.

3.1 Pre-Ride Safety Checks

CONDUCT THESE IMPORTANT SAFETY CHECKS BEFORE EVERY JOURNEY:

Brakes:

- MAKE SURE THE BRAKES WORK PROPERLY SUCH THAT THE HANDBRAKE LEVERS ARE SECURED TO THE HANDLEBAR AND LUBRICATED SO THEY COMPRESS EASILY.
- ENSURE THAT THE BRAKE PADS ARE NOT WORN, AND THAT THEY ARE CENTERED AND ALIGNED WITH THE ROTOR.

Frame:

- CHECK THAT THE BIKE FRAME AND THE FORK ARE NOT DAMAGED, BENT, OR BROKEN.
- ENSURE THAT THE STEM-TO-FORK BOLT IS NOT OVERTIGHTENED. AN OVERTIGHTENED BOLT CAN LEAD TO A MALFUNCTION THAT PUTS RIDER SAFETY AT RISK.
- CHECK THAT THE DRIVE SYSTEM IS IN WORKING ORDER AND SECURELY ATTACHED TO THE FRAME.
- CHECK THAT THE FRAME IS SECURED IN THE RIDING POSITION BY THE FRAME LOCKING LATCH.

Cranks & Pedals:

- CHECK THAT THE PEDALS ARE SECURELY TIGHTENED TO THE CRANKS.
- CHECK THAT THE CRANKS AND DRIVE SYSTEM ARE SECURELY TIGHTENED TO THE FRAME OF THE BIKE AND ROTATE FREELY.

Steering:

- CHECK THAT THE STEM IS SECURED BY THE FOLDING LATCH.
- CHECK THAT THE HANDLEBAR IS SECURED IN POSITION BY THE HANDLEBAR CLAMP.

Wheels:

- CHECK THAT TIRES DO NOT SHOW SIGNS OF EXCESSIVE WEAR OR DAMAGE.
- MAKE SURE THAT THE TIRES ARE INFLATED TO THE RECOMMENDED PRESSURE OF **35 - 45 PSI**.
- CHECK THE WHEEL RIMS AND WHEEL SPOKES ARE NOT DAMAGED, BROKEN, OR BENT.
- CHECK THAT THE AXLE NUTS ARE TIGHT.

Chain:

- CHECK THAT THE TENSION OF THE CHAIN IS SUCH THAT YOU CAN ONLY LIFT THE MIDDLE OF THE CHAIN ½ INCH.

3.2 Tire Inflation & Pressure

BEFORE YOUR FIRST RIDE, YOU WILL NEED TO ADD AIR TO THE TIRES TO BRING THEM TO WITHIN THE RECOMMENDED PRESSURE OF **35 - 45 PSI** (POUNDS PER SQUARE INCH). USE A GAUGE TO CHECK THAT THE TIRE PRESSURE IS AT THE REOMMENDED PSI PRIOR TO EVERY RIDE.

To Add Air:

1. REMOVE THE DUST CAP FROM THE TIRE VALVE ON ONE WHEEL BY TWISTING IT COUNTERCLOCKWISE. SET ASIDE.
2. FOLLOW THE MANUFACTURER'S INSTRUCTIONS ON YOUR AIR PUMP TO INSERT AIR INTO THE TIRE. CHECK PERIODICALLY WITH A GAUGE AND CONTINUE ADDING AIR UNTIL YOU REACH **35 - 45 PSI**.
3. REMOVE THE AIR PUMP AND REPLACE THE DUST VALVE BY TWISTING IT ON CLOCKWISE.
4. REPEAT WITH THE OTHER TIRE.

IMPORTANT: Only use a manual air pump to inflate the tires on your e-bike. Never use an air compressor; doing so may cause the tire tubes to pop.

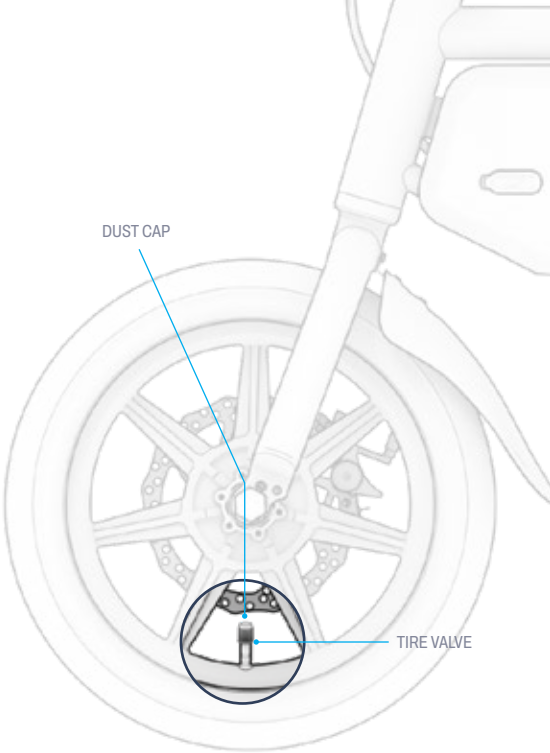

3.3 Unfolding & Folding the Pedals

WHEN TO UNFOLD: FOR SETUP AND RIDING.
WHEN TO FOLD: FOR STORAGE AND TRANSPORT.

DEPENDENT ON THE DATE OF PRODUCTION OF YOUR E-BIKE, YOU WILL EITHER HAVE PEDAL Ⓐ OR PEDAL Ⓑ. IDENTIFY YOUR PEDAL USING THE DIAGRAMS TO THE RIGHT AND FOLLOW THE INSTRUCTIONS FOR THE PEDAL YOUR BIKE HAS.

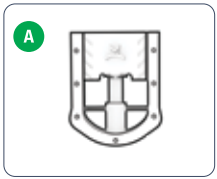

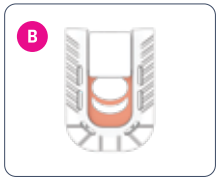

PEDAL A

To Unfold:

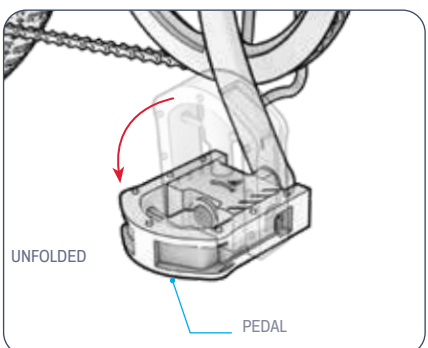

PULL OUTWARDS AND DOWN UNTIL THE PEDAL SNAPS INTO PLACE.

To Fold:

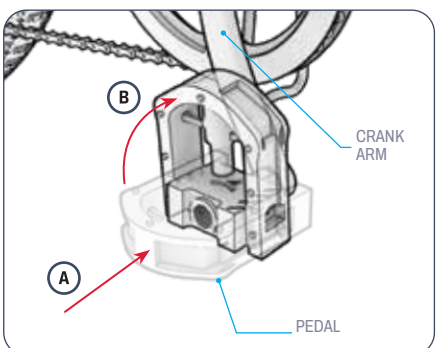

PUSH THE PEDAL IN (A) AND PIVOT IT UP TOWARDS THE CRANK ARM (B).

PEDAL B

To Unfold:

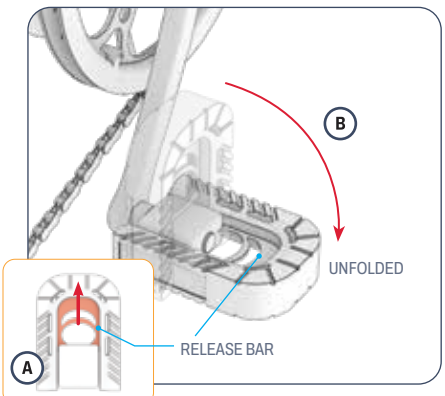

PULL THE RELEASE BAR TOWARDS TO THE TIP OF THE PEDAL (A) AND PIVOT THE PEDAL DOWN UNTIL IT SNAPS INTO PLACE (B).

To Fold:

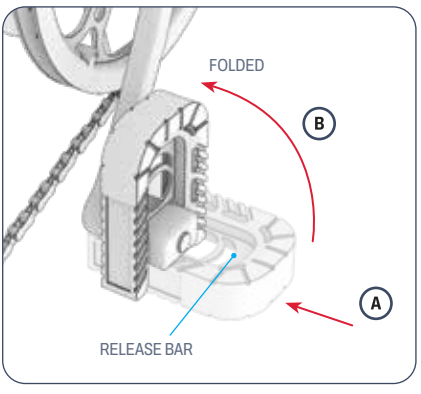

PUSH THE PEDAL IN (A) AND PIVOT IT UP TOWARDS THE CRANK ARM (B).

3.4 Adjusting the Handlebar Height

TROUBLESHOOTING: If you cannot open or close the clamp latch, the knob may be too tight. Loosen the knob by turning it counterclockwise for ½ rotation at a time until you can utilize the latch.

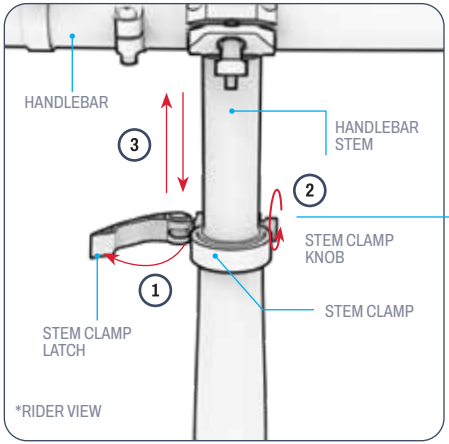

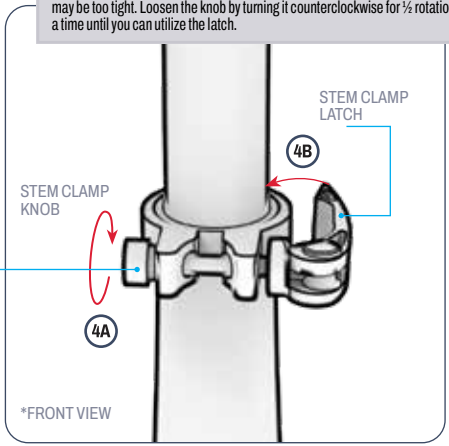

1. PULL OPEN THE LATCH ON THE STEM CLAMP.
2. LOOSEN THE CLAMP KNOB BY TURNING IT COUNTERCLOCKWISE.
3. RAISE OR LOWER THE STEM UNTIL THE HANDLEBAR IS AT THE DESIRED HEIGHT.

⚠ **WARNING:** To avoid a collapsing of the handlebar post that could result in injury, ensure that the clamp is secure around the handlebar stem.

⚠ **WARNING:** Never raise the handlebar such that the "minimum insertion" mark comes into view above the clamp.

4. WHILE HOLDING THE HANDLEBAR IN PLACE, RETIGHTEN THE CLAMP KNOB BY TURNING IT CLOCKWISE (A) AND PUSH THE LATCH CLOSED (B).
5. CHECK THAT THE HANDLEBAR IS SECURE: USE YOUR HAND TO PUT DOWNWARD PRESSURE ON THE HANDLEBAR. IF THE STEM SLIPS DOWN INTO THE STEM TUBE, BRING THE HANDLEBAR BACK TO POSITION AND TIGHTEN THE CLAMP BY FURTHER TURNING THE KNOB CLOCKWISE.

3.5 Adjusting the Handlebar Rotation

THE HANDLEBAR CAN BE ROTATED FORWARD OR BACKWARDS SO THAT ALL FEATURES AND FUNCTIONS ARE IN THE IDEAL POSITION. THEY SHOULD BE EASILY REACHABLE WHILE RIDING AND ANGLED IDEALLY IN THE LINE OF SIGHT FOR EACH USER. THE HANDBRAKES, ESPECIALLY, SHOULD BE POSITIONED SO THEY ARE EASY TO GRIP.

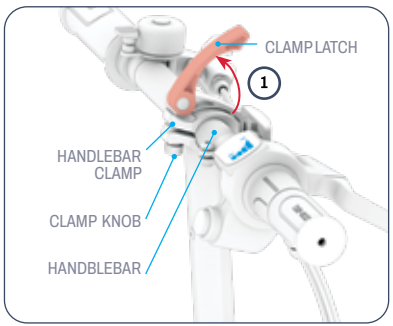

1. PULL OPEN THE LATCH ON THE HANDLEBAR CLAMP.

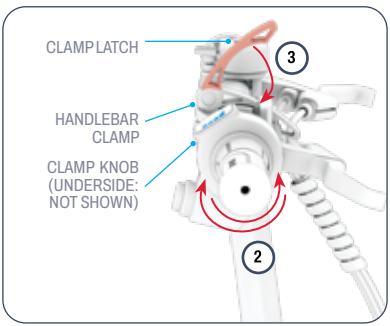

2. ROTATE THE HANDLEBAR FORWARD OR BACKWARDS TO REPOSITION IT.
3. WHILE HOLDING THE HANDLEBAR IN THE NEW POSITION, PUSH THE LATCH CLOSED.

TROUBLESHOOTING: If the handlebar does not stay secure with the clamp closed, you may need to tighten the clamp. First, pull the clamp latch open. Then, finger tighten the knob by turning it clockwise for a few rotations, and re-close the clamp latch. If you cannot close the latch with ease, the knob may be too tight. Loosen the knob slightly by turning it counterclockwise for ½ rotation.

3.6 Checking & Adjusting the Brakes

Brake Safety & Functionality Check:

AFTER ASSEMBLY AND PRIOR TO EVERY RIDE, CHECK THAT THE BRAKES ARE FUNCTIONING PROPERLY AND SAFELY TO SLOW THE WHEEL DOWN AND BRING IT TO A STOP BY PERFORMING THE FOLLOWING STEPS:

1. WALK WITH YOUR BIKE AND GENTLY PULL THE LEFT HANDBRAKE.
2. CHECK THAT THE FRONT CALIPER CLOSES PROPERLY ON THE DISC AND SLOWS THE WHEEL ROTATION DOWN.
3. REPEAT, PULLING THE LEFT HANDBRAKE WITH MORE PRESSURE AND CHECKING THAT THE FRONT WHEEL IS BROUGHT TO A STOP.
4. REPEAT STEPS 1 - 3 WITH THE RIGHT HANDBRAKE AND THE REAR WHEEL.

Proper Brake Caliper & Pad Positioning:

BIKE BRAKES REQUIRE ALL ELEMENTS TO BE IN EXACT ALIGNMENT AND PLACEMENT IN ORDER TO FUNCTION PROPERLY. A RUBBING OR SQUEAKING SOUND COMING FROM A BRAKE AREA (EITHER CONSTANT OR INTERMITTENT) IS A GOOD INDICATOR THAT SOMETHING IS OUT OF ALIGNMENT AND NEEDS TO BE ADJUSTED.

THE CAUSE OF THE NOISE IS LIKELY A MISALIGNED CALIPER, CAUSING THE BRAKE PADS INSIDE OF THEM TO RUB AGAINST THE DISC EVEN WHEN THE CALIPER IS OPEN. THE PADS SHOULD ONLY COME IN CONTACT WITH THE DISC WHEN THE CALIPER IS CLOSED BECAUSE THE HANDBRAKE HAS BEEN PULLED.

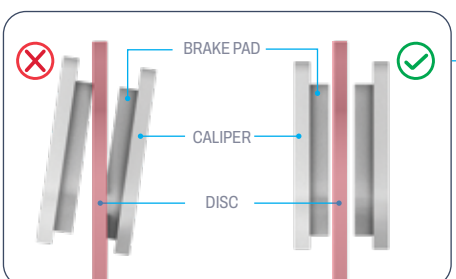

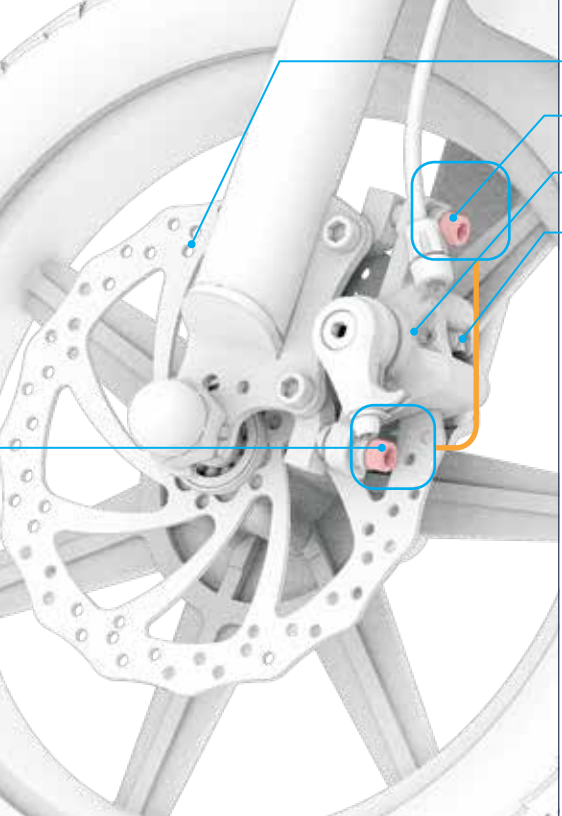

Adjusting the Brake Caliper:

YOU MAY NEED A 5MM ALLEN KEY (INCLUDED ON THE MULTI-TOOL WITH SOME MODELS).

1. ON THE BRAKE THAT NEEDS ADJUSTING, LOCATE THE CALIPER, BRAKE PADS, AND DISC.
2. LIFT THAT WHEEL OF THE BIKE AND GIVE IT A SPIN. WATCH THE DISC REVOLVE BETWEEN THE BRAKE PADS, AND NOTICE WHICH PAD IS RUBBING AGAINST THE DISC.
3. REST THE BIKE ON THE KICKSTAND. (SEE SECTION 4.5).
4. WHEN LOOKING AT THE CALIPER FROM THE BACK OF THE WHEEL, LOCATE THE BOLT ABOVE AND THE BOLT BELOW THE CALIPER. USE THE 5MM ALLEN KEY TO EACH BOLT BY TURNING IT COUNTERCLOCKWISE FOR 4 - 5 ROTATIONS.
5. MOVE THE CALIPER OUT OF ALIGNMENT UNTIL THE FOLLOWING CONDITIONS ARE MET:
   - THE TOP OF THE PADS ARE ALIGNED WITH THE EDGE OF THE DISC.
   - NO PART OF EITHER PAD IS TOUCHING THE DISC.
   - THE PADS ARE PARALLEL TO THE DISC.
6. WITH THE CALIPER IN THE DESIRED POSITION, FULLY TIGHTEN ONE BOLT AND THEN THE OTHER BY TURNING IT CLOCKWISE WITH THE ALLEN KEY.
7. CHECK THAT THE CALIPER IS SECURE AND CONDUCT THE BRAKE SAFETY & FUNCTIONALITY CHECK (START OF SECTION 3.6) AGAIN.

4. OPERATING INSTRUCTIONS.

4.1 Powering On & Off

TO TURN THE E-BIKE ON OR OFF: QUICK-PRESS THE POWER BUTTON TO TURN YOUR E-BIKE ON OR OFF.

IMPORTANT:
To preserve battery power, always remember to power your bike off when making a pit stop or putting it away for the night.

⚠ **WARNING:**
To avoid damage to the battery and electrical system that could result in malfunction and compromise safety, never power on your e-bike while it is charging.



4.2 Checking Battery Charge Level

YOU CAN KEEP TABS ON YOUR BATTERY'S CHARGE LEVEL BY LOOKING AT THE INDICATOR LIGHTS ON THE BATTERY CHARGE DISPLAY.

BATTERY CHARGE DISPLAY	APPROXIMATE REMAINING CHARGE PERCENTAGE*
	76% - 100%
	51% - 75%
	26% - 50%
	11% - 25% Charge your e-bike now!
	10% Really, it's time to charge!

IMPORTANT: Your bike's ability to reach top speed can be affected by the battery charge level. You may notice a reduction in speed when battery charge dips below 25%.
IMPORTANT: When the battery charge depletes to 0%, the e-bike will power off. Charge to full power (see section 2.8) prior to your next ride.

**APPROXIMATION ONLY. MAY VARY BASED ON USE.*

4.3 Using the Bell

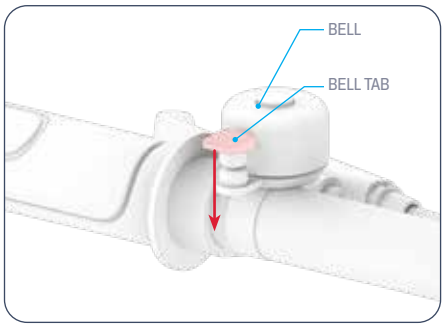

USE THE BELL AS AN ALERT TO OTHER RIDERS AND PEDESTRIANS.

TO SOUND THE BELL:
FLICK DOWN ON THE BELL TAB QUICKLY AND FORCEFULLY WITH YOUR LEFT-HAND THUMB.

4.4 Using the Kickstand

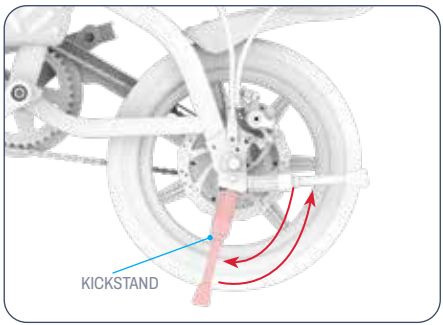

TO USE THE KICKSTAND: PIVOT IT DOWN AND GENTLY TILT YOUR E-BIKE ONTO IT TO STAND.

TO RAISE THE KICKSTAND: PIVOT IT BACK UP.

⚠ **CAUTION:** Always raise the kickstand before riding.

4.5 Using the Cargo Rack

1. PLACE YOUR CARGO ON THE RACK.
2. SLIP 1 HOOK OF A BUNGEE STRAP (NOT INCLUDED) AROUND ONE SIDE OF THE RACK.
3. STRETCH THE BUNGEE STRAP OVER THE CARGO AND AROUND THE RACK UNTIL IT IS TAUT.
4. SECURE THE OTHER HOOK OF THE BUNGEE STRAP AROUND THE OTHER SIDE OF THE RACK.
5. CHECK THAT THE BUNGEE STRAP AND YOUR CARGO ARE SECURE.

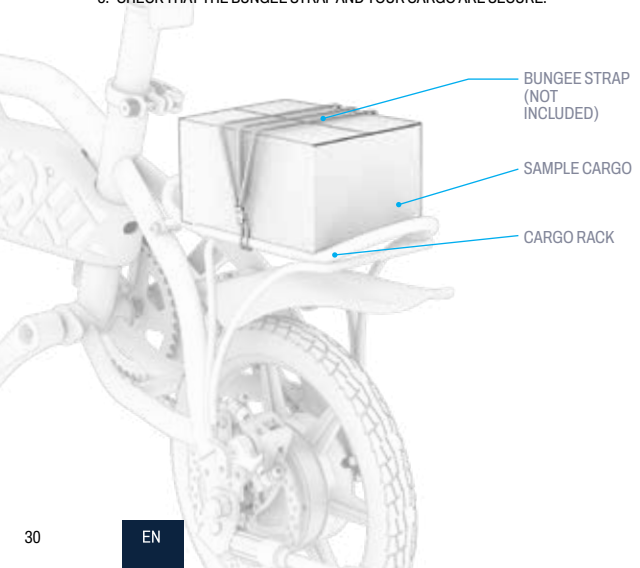

IMPORTANT: The bungee strap should aways be snug over your cargo. Depending on the size of your cargo and the length of the bungee strap, it may be necessary to wrap the strap under the rack and over your cargo again before securing the 2nd hook on the other side of the rack.

⚠ **WARNING:**

For safety and security:

- Always secure cargo to the rack with a bungee strap. Never ride with unsecured cargo.
- Limit carrying contents on the rack to 22 LB (9.97 kg).
- Ensure that the total carrying weight (rider plus cargo) does not exceed 250 LB (113.4 kg).
- Do not overflow the rack.
- Always ensure that no parts of the cargo are in the way of wheel, brake, pedal, chain or other bike movement or mechanisms.

IMPORTANT:

- The addition of cargo with significant weight may affect the performance of your e-bike. For more details on conditions that can affect performance, see section 5.7.
- Never leave cargo unattended on the e-bike.

5. MOVING INSTRUCTIONS.

5.1 Riding Your E-Bike

JET OFF ON YOUR E-BIKE IN 3 DIFFERENT WAYS:

1. WITH ASSISTED PEDALING (SECTION 5.2)
2. USING ONLY PEDAL POWER (SECTION 5.3)
3. USING THE THROTTLE FOR ALL-MOTOR POWER (SECTION 5.4)

5.2 Using Electronic Pedal Assistance

WHEN YOU PEDAL WITH THE POWER TURNED ON, THE MOTOR WILL GIVE BOOSTS OF POWER TO THE PEDALS TO SUPPLEMENT YOUR EXERTION. WITH "PEDAL ASSIST," YOU CAN GO FARTHER AND FASTER ON LESS EFFORT.

TO KEEP YOU IN CONTROL OF SPEED, PEDAL ASSIST BOOSTS WILL BE PROPORTIONAL TO YOUR EFFORT.

- **GENTLER PEDALING** ➔ SMALLER BOOSTS OF MOTOR ASSISTANCE SO THAT YOU CAN MAINTAIN A MODERATE SPEED.
- **HARDER PEDALING** ➔ LARGER BOOSTS OF MOTOR ASSISTANCE SO THAT YOU CAN RIDE AT A FASTER PACE.

5.3 Traditional Biking

YOU CAN RIDE YOUR E-BIKE LIKE A TRADITIONAL BIKE — USING ONLY PEDAL POWER. JUST RIDE AS YOU WOULD A TRADITIONAL BIKE, WITHOUT POWERING THE MOTOR ON.

5.4 Using the Throttle

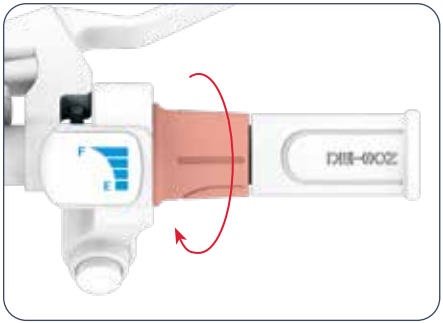

TO RIDE THE E-BIKE LIKE A MOTOR BIKE STOP PEDALING AND KEEP YOUR FEET RESTING ON THE PEDALS.

TO ACCELERATE: SLOWLY ROTATE THE ACCELERATION THROTTLE TOWARDS YOU WITH YOUR RIGHT HAND.

- THE MORE YOU ROTATE THE THROTTLE, THE MORE THE MOTOR WILL ENGAGE — AND THE FASTER YOU WILL TRAVEL.
- TO AVOID SUDDEN BURSTS OF SPEED, ALWAYS ROTATE THE THROTTLE GRADUALLY.

TO SLOW DOWN: GENTLY EASE UP ON THE THROTTLE.

⚠ **CAUTION:** To avoid injury, always rest your feet on the pedals, even when you are not pedaling. Never ride with them dangling off the side of the bike.

5.5 Using the Brakes

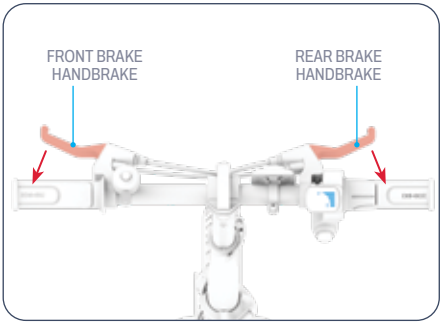

- SQUEEZE ONE OR BOTH HANDBRAKES TO SLOW DOWN.
- SQUEEZE MORE FORCEFULLY TO COME TO A COMPLETE STOP.
- TO AVOID ABRUPT MOVEMENTS, TRY TO SQUEEZE THE HANDBRAKE(S) GRADUALLY.
  - LEFT HANDBRAKE ➔ FRONT WHEEL BRAKE
  - RIGHT HANDBRAKE ➔ REAR WHEEL BRAKE

5.6 Helmet Safety

A HELMET SHOULD BE WORN BY THE RIDER AT ALL TIMES.



IMPROPER POSITIONING:
THE FOREHEAD IS EXPOSED.
A FALL COULD RESULT
IN SERIOUS INJURY.



PROPER POSITIONING:
THE FOREHEAD IS COVERED
BY THE HELMET.

**WEAR A HELMET, APPROPRIATE CLOTHING, SHOES, AND SAFETY GEAR. AVOID CLOTHING THAT CAN GET CAUGHT INTO OR UNDER THE WHEELS. CLOSED-TOE, FLAT SHOES ARE RECOMMENDED. WEAR AN ASTM F1492 APPROVED HELMET AND PROTECTIVE GEAR TO PREVENT INJURY IN THE EVENT OF AN ACCIDENT.*

5.7 Maximizing Speed & Riding Range

IN IDEAL CONDITIONS, THE MAXIMUM MILEAGE THAT CAN BE ACHIEVED PER FULLY CHARGED BATTERY IS 15.0 MILES (24.1 KM) IF EXCLUSIVELY USING THE THROTTLE. THE MAXIMUM SPEED IS 15.5 MPH (24.9 KM/H). THE HARDER THE MOTOR NEEDS TO WORK, THE FASTER YOUR BATTERY WILL DRAIN. THE FOLLOWING FACTORS WILL ALSO AFFECT SPEED AND RIDING RANGE.

Riding Surface:
TRAVELING OVER A ROUGH SURFACE REQUIRES MOTOR POWER THAN RIDING ON A SMOOTH ONE.

Carrying Weight:
- MORE WEIGHT (RIDER PLUS CARGO) DECREASES ACHIEVABLE RANGE.
- MAXIMUM RANGE AND SPEED CAN BE ACHIEVED WITH CARRYING WEIGHT OF 165.4 LB (75 KG) OR LESS.

Riding Style:
- FREQUENT STARTING AND STOPPING WILL REDUCE RIDING RANGE.
- USING YOUR OWN EFFORT TO PEDAL WILL EASE THE DEMAND ON THE MOTOR AND INCREASE YOUR RIDING RANGE.

Air Temperature:
THE IDEAL TEMPERATURE FOR RIDING AND STORING THE E-BIKE IS BETWEEN 50°F - 95°F (10°C - 35°C).

Incline:
THE MOTOR HAS TO WORK HARDER TRAVELING UPHILL THAN ON FLAT STRETCHES OR DOWNHILL.

Battery Maintenance:
TIMELY BATTERY CHARGING AFTER EVERY RIDE HELPS MAINTAIN BATTERY CAPACITY AND STRENGTH.

Tire Inflation:
INFLATING THE TIRES TO THE RECOMMENDED PRESSURE WILL HELP ACHIEVE MAXIMUM RIDING SPEED AND RANGE.

USER MAINTENANCE INSTRUCTIONS.

Take good care of your Jetson to keep it riding smoothly and safely. Here's how:

Handling Your Jetson:

- AVOID EXPOSING YOUR PRODUCT TO SEVERE VIBRATION OR INTENSE PHYSICAL IMPACT.
- NEVER DISASSEMBLE THE BATTERY.
- KEEP YOUR PRODUCT AWAY FROM WATER AND MOISTURE.
- RIDE ON SMOOTH, FLAT SURFACES TO AVOID BREAKAGE.
- NEVER CARRY YOUR PRODUCT BY THE WHEELS, SEAT, AND/OR HANDLEBAR.
- TAKE CARE NOT TO PULL OR SNAG THE WIRING CONNECTING THE MOTOR WITH THE HANDLEBAR COMPONENTS.

Storage Instructions:

- FULLY CHARGE THE BATTERY BEFORE STORING THE PRODUCT FOR EXTENDED PERIODS OF TIME.
- WHEN IN STORAGE FOR EXTENDED PERIODS OF TIME, FULLY CHARGE THE BATTERY ONCE A MONTH.
- COVER THE PRODUCT TO PROTECT IT AGAINST DUST.
- STORE THE PRODUCT INDOORS AND IN A DRY PLACE AT A TEMPERATURE BETWEEN 50°F - 95°F (10°C - 35°C).

Cleaning Your Jetson:

- SEAT AND FRAME - WIPE WITH A DAMP DUST-FREE CLOTH OR ONE DIPPED IN RUBBING ALCOHOL. FOLLOW WITH A DRY DUST-FREE CLOTH.
- HANDLEBAR - WIPE DOWN WITH MILD SOAP USING A DAMP DUST-FREE CLOTH. REMOVE EXCESS SOAP WITH A SEPARATE DAMP CLOTH.
- WHEEL COMPONENTS - WIPE WITH A DAMP DUST-FREE CLOTH.
- TIRES - WIPE WITH A DAMP DUST-FREE CLOTH. A TIRE FINISHER OR CLEANER CAN ALSO BE USED.

⚠ **WARNING:** Do not spray or apply water directly onto to the product. Water can cause damage to the wiring, battery compartment, and lights, as well as deterioration of the frame—all of which could cause a malfunction that puts rider safety at risk.

⚠ Battery Precautions:

YOUR PRODUCT HAS A LITHIUM-ION BATTERY. TAKE CARE WHEN HANDLING.

- KEEP PRODUCT AWAY FROM FIRE AND EXCESSIVE HEAT.
- AVOID INTENSE PHYSICAL SHOCK, SEVERE VIBRATION, OR IMPACT.
- PROTECT PRODUCT FROM WATER OR MOISTURE.
- DO NOT PLACE OR STORE PRODUCT IN A PILE ON TOP OF OR UNDERNEATH OTHER OBJECTS.
- DO NOT DISASSEMBLE THE PRODUCT OR ITS BATTERY.
- DO NOT DISPOSE OF PRODUCT WITH EVERYDAY TRASH. BRING PRODUCT TO A DEDICATED E-WASTE FACILITY OR BATTERY RECYCLING CENTER. FOR MORE INFORMATION ON DISPOSAL SITES NEAR YOU, CONTACT YOUR LOCAL MUNICIPALITY OR WASTE HAULER.
- SHOULD THE PRODUCT'S BATTERY FEEL HOT OR EXHIBIT SIGNS OF OVERHEATING, EMIT AN ODOR OR UNUSUAL SOUND, LEAK FLUID OR GAS, OR CHANGE IN SHAPE OR COLOR, IMMEDIATELY:
  1. IF IN USE, STOP USING THE PRODUCT IMMEDIATELY. REMOVE THE CHARGING CABLE FROM THE PRODUCT IF IT IS PLUGGED IN.
  2. DISCONTINUE USE OF THE PRODUCT.
  3. IF SAFE TO DO SO, MOVE THE PRODUCT INTO A CLEAR SPACE AND AWAY FROM ANYTHING FLAMMABLE.
  4. CALL YOUR LOCAL EMERGENCY SERVICES FOR ASSISTANCE.
  5. THOROUGHLY WASH EYES OR AREAS OF SKIN THAT HAVE COME IN CONTACT WITH LEAKING BATTERY ELECTROLYTE FLUID WITH CLEAN RUNNING WATER AND SEEK ADDITIONAL MEDICAL ATTENTION.
- IF THERE ARE ANY ISSUES WITH THE BATTERY, CONTACT THE JETSON CARE TEAM.

CONNECT WITH US.

RIDEJETSON.COM/SUPPORT
RIDEJETSON.COM/CHAT

1-844-585-7462

Be sure to follow @ridejetson on social media to learn about fantastic offers, giveaways, and all the latest Jetson news.

LOVING YOUR RIDE?

Leave a review at
ridejetson.com/reviews.
We can't wait to hear from you!
#MakeMoves




JETSON