A GUIDE FOR YOUR RIDE.

IMPORTANT:
Read carefully and retain for future reference.

JETSON

J-RAY

Light-Up Kick Scooter

MODEL SKU(S): JJRAY-BLU

JETSON'S TOP TWO RIDING RULES:

BE SAFE. HAVE FUN!

MANUFACTURED IN YONGKANG, CHINA
IMPORTED BY TRURIDE TECH LLC.
PO BOX 461, JERSEY CITY, NJ 07302-9998

DATE CODE: 11/2025
DOCUMENT EDITION: V2.0
MADE IN CHINA

© 2025, TRURIDE TECH. ALL RIGHTS RESERVED. MANUFACTURED FOR TRURIDE TECH LLC.
JETSON® IS A REGISTERED TRADEMARK USED UNDER LICENSE FROM JETSTREAM BRANDS LLC.
NO PORTION OF THIS DOCUMENT, INCLUDING SHAPE, GRAPHICS, AND DESIGN, MAY BE
REPRODUCED OR TRANSMITTED IN ANY FORM OR BY ANY MEANS.

Contents

Safety Warnings 3

Warranty Coverage & Product Registration 5

1. About Your Product

1.1 Product Overview 6

1.2 Product Specs 7

1.3 Online Resources 7

2. Getting Started

2.1 Starting Notes 8

2.2 Helmet Safety 8

2.3 Unfolding & Folding the Scooter 9

2.4 Attaching & Positioning the Handlebar 11

2.5 Inserting the Batteries 15

2.6 Activating the LED Lights 16

3. Making Moves

3.1 Accelerating & Keeping Momentum 17

3.2 Coastng 17

3.3 Turning 18

3.4 Using the Brake 18

Care & Maintenance 19

Connect with Us 20

INSTRUCTIONS ON THE RISK OF FIRE OR INJURY TO PERSONS AND IMPORTANT SAFETY INSTRUCTIONS

- Before use, please read the user manual and safety warnings carefully, and make sure you understand and accept all the safety instructions. The user will be responsible for any loss or damage caused by improper use.
- Before each cycle of operation, the operator shall perform the preoperation checks specified by the manufacturer: That all guards and pads originally supplied by the manufacturer are in proper place and in serviceable condition; That the braking system is functioning properly; That any and all axle guards, chain guards, or other covers or guards supplied by the manufacturer are in place and in serviceable condition; That tires are in good condition, inflated properly, and have sufficient tread remaining; The area that the product is to be operated should be safe and suitable for safe operation.
- Components shall be maintained and repaired in accordance with the manufacturer's specifications and using only the manufacturer's authorized replacement parts with installation performed by dealers or other skilled persons.
- Do not mix old and new batteries.
- Do not mix alkaline, standard (carbon-zing) or rechargeable batteries.
- This product should not be used by children or persons with reduced physical, sensory or mental capabilities, or lack of experience and knowledge, unless they have been given supervision or instruction (IEC 60335-1/A2:2006).
- Unsupervised children should not play with the product (IEC 60335-1/A2:2006).
- Adult supervision is required.
- Units shall not be operated to perform racing, stunt riding, or other maneuvers, which may cause loss of control, or may cause uncontrolled operator/passenger actions or reactions.
- Never use near motor vehicles.
- Avoid sharp bumps, drainage grates, and sudden surface changes. Scooter may suddenly stop.
- Avoid streets and surfaces with water, sand, gravel, dirt, leaves, and other debris. Wet weather impairs traction, braking, and visibility.
- Avoid riding around flammable gas, steam, liquid, or dust that could cause fire.
- Operators shall adhere to all of the manufacturer's recommendations and instructions, as well as comply with all laws and ordinances: Units without headlights shall be operated only with adequate daylight conditions of visibility, and; Owners shall be encouraged to highlight (for conspicuity) using lighting, reflectors, and for low-riding units, signal flags on flexible poles.
- Persons with the following conditions shall be cautioned not to operate: Those with heart conditions; Pregnant women; Persons with head, back, or neck ailments, or prior surgeries to those areas of the body; and persons with any mental or physical conditions that may make them susceptible to injury or impair their physical dexterity or mental capabilities to recognize, understand, and perform all of the safety instructions and to be able to assume the hazards inherent in unit use.
- Do not ride at night.
- Do not ride after drinking or taking prescription medication.
- Do not carry items when riding.
- Never operate the product barefooted.
- Always wear shoes and keep shoelaces tied.
- Make sure your feet are always placed securely on the deck.
- Always give way to pedestrians.

SAFETY WARNINGS.

KEEP THESE INSTRUCTIONS.

- Be alert to things in front and far away from you.
- Operators always shall use appropriate protective clothing, including but not limited to a helmet, with appropriate certification, and any other equipment recommended by the manufacturer: Always wear protective equipment such as helmet, knee pads, and elbow pads.
- Do not allow distractions when riding, such as answering the phone or engaging in any other activities.
- The product cannot be ridden by more than one person.
- When you ride the product along with other riders, always keep a safe distance to avoid a collision.
- When turning, be sure to maintain your balance.
- Riding with improperly adjusted brakes is dangerous and can result in serious injury or death.
- The brake may become hot while operating, do not touch the brake with your bare skin.
- Applying brakes too hard or too suddenly can lock up a wheel, which could cause you to lose control and fall. Sudden or excessive application of the brake may result in injury or death.
- If the brake loosens, please adjust with a hexagon wrench, screwdriver, or other applicable tool, or please contact the Jetson Care Team.
- Replace worn or broken parts immediately.
- Check whether all safety labels are in place and understood before riding.
- The owner shall allow the use and operation of the unit after a demonstration that such operators can understand and operate all components of the unit before use.
- Do not ride without proper training. Do not ride at high speeds, on uneven terrain, or on slopes. Do not perform stunts or turn abruptly.
- Recommended for indoor use.
- Only use the battery(ies) specified by the manufacturer
- Prolonged exposure to UV rays, rain and the elements may damage the enclosure materials, store indoors when not in use.
- The rider should not exceed 165 lb (74.8 kg).

DISPOSAL OF USED BATTERY



Battery may contain hazardous substances which could endanger the environment and human health. This symbol marked on the battery and/or packaging indicates that used battery shall not be treated as municipal waste. Batteries should be disposed of at an appropriate collection point for recycling. By ensuring the used batteries are disposed of correctly, you will help preventing potential negative consequences for the environment and human health. The recycling of materials will help to conserve natural resources. For more information about recycling of used batteries, please contact your local municipality waste disposal service.

- Do not mix old and new batteries.
- Do not mix alkaline, standard (carbon-zinc) or rechargeable batteries.

MODIFICATIONS

Do not attempt to disassemble, modify, repair, or replace the unit or any components of the unit without instruction from the Jetson Care Team. This will void any warranty, and can lead to malfunctions which may cause injury.

ADDITIONAL OPERATION PRECAUTIONS

Do not lift the product off the ground while it is on and the wheels are in motion. This can result in freely spinning wheels, which may cause injury to yourself or others nearby. Do not jump on or off the product, and do not jump while using it. Always keep your feet firmly planted on the foot rest while in operation. Always check the battery charge before using.

⚠ WARNING:

Failure to comply with the following instructions may result in injury to the child or others.

- Keep small parts away from children during assembly.
- Accessory must be assembled and removed by an adult.
- Frequently inspect the product for damage.

*** ADULT ASSEMBLY IS REQUIRED.**

⚠ WARNING:

To reducte the risk of injury, adult supervision is required. Never use in roadways, near motor vehicles, on or near steep inclines or steps, swimming pools or other bodies of water; always wear shoes, and never allow more than 1 rider.

CALIFORNIA PROPOSITION 65

⚠ WARNING:

THIS PRODUCT CAN EXPOSE YOU TO CHEMICALS INCLUDING CHROMIUM (HEXAVALENT COMPOUNDS), WHICH IS KNOWN TO THE STATE OF CALIFORNIA TO CAUSE CANCER AND BIRTH DEFECTS OR OTHER REPRODUCTIVE HARM. FOR MORE INFORMATION GO TO: WWW.P65WARNINGS.CA.GOV.

WARRANTY COVERAGE & PRODUCT REGISTRATION.

GENERAL LIMITED WARRANTY

YOUR NEW JETSON PRODUCT IS WARRANTED AGAINST DEFECTS IN MATERIALS AND WORKMANSHIP AS INDICATED ON RIDEJETSON.COM/WARRANTY FOR A PERIOD OF TIME FROM THE DATE OF ORIGINAL RETAIL PURCHASE WHEN USED IN ACCORDANCE WITH JETSON'S USER MANUALS (REFER TO RIDEJETSON.COM/SUPPORT). **UNDER THIS WARRANTY, YOU WILL BE ABLE TO DIRECT YOUR CLAIMS TO JETSON EVEN IN SITUATIONS WHERE YOU PURCHASED THE JETSON PRODUCT FROM ONE OF OUR AUTHORIZED RETAILERS.** TO READ THE FULL TERMS OF OUR WARRANTY, VISIT RIDEJETSON.COM/WARRANTY.

PRODUCT REGISTRATION

REGISTER YOUR NEW JETSON TO FAST-TRACK YOU TOWARDS PERSONALIZED PRODUCT AND WARRANTY SUPPORT. MAKE YOUR MOVE AT RIDEJETSON.COM/PAGES/REGISTRATION.

1. ABOUT YOUR PRODUCT.

1.1 Product Overview

1. HANDLEBAR*
2. STEM CLAMP
3. STEM
4. FOLDING LEVER
5. FRONT WHEEL
6. LOCKING LATCH
7. KNOB
8. DECK (LED LIGHT-UP)
9. LIGHTING CONTROL BUTTON (UNDERSIDE OF DECK)
10. BATTERY COMPARTMENT (UNDERSIDE OF DECK)
11. REAR FOOT BRAKE
12. REAR WHEEL

Tool included for setup & adjustment:



2-bit Phillips-head screwdriver (A) and 5mm Allen key (B) tool

ADULTS MUST ASSIST CHILDREN IN THE ASSEMBLY AND INITIAL ADJUSTMENT PROCEDURES OF THE PRODUCT.

NOTE: IMAGES MAY NOT REFLECT EXACT APPEARANCE OF ACTUAL PRODUCT.

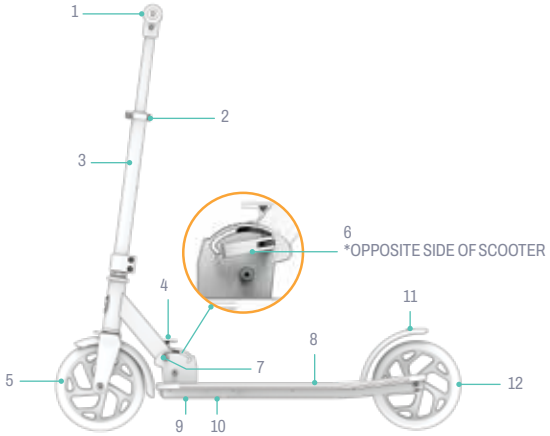

1.2 Product Specs

- WHEEL SIZE: 8 IN
- PRODUCT DIMENSIONS (FOLDED): 32.0 IN(L) × 15.4 IN(W) × 12.7 IN(H)
- PRODUCT DIMENSIONS (UNFOLDED): 36.1 IN(L) × 15.5 IN(W) × 35.5 IN(H)
- DECK DIMENSIONS: 22.9 IN(L) × 6.1 IN(W)
- HANDLEBAR HEIGHT: 31.5 IN - 40.3 IN
- WEIGHT LIMIT: 165 LB
- PRODUCT WEIGHT: 9.7 LB
- RECOMMENDED AGE: 8+
- BATTERIES REQUIRED: 3AA (NOT INCLUDED)

1.3 Online Resources

Scan for our most updated product onboarding materials and support resources.

Find our collection of user manuals at https://ridejetson.com/pages/product-manuals

2. GETTING STARTED.

2.1 Starting Notes

- KICK OFF YOUR ADVENTURE RIGHT: PRIOR TO USE OF THIS PRODUCT, CAREFULLY READ THE ENTIRE USER MANUAL, INCLUDING SAFETY WARNINGS. MAKE SURE YOU UNDERSTAND, ACCEPT, AND ADHERE TO ALL:
  - MANUFACTURER'S RECOMMENDATIONS.
  - SAFETY INSTRUCTIONS AND WARNINGS.
  - LOCAL RIDING AND OPERATIONAL LAWS AND ORDINANCES.

- REMOVE ALL PROTECTIVE PACKAGING PIECES PRIOR TO BEGINNING SETUP.

- THE DIRECTIONS GIVEN IN THIS MANUAL—RIGHT, LEFT, FRONT/FORWARD, AND REAR/BACK—ARE ORIENTED AS THE RIDER WOULD SEE THEM WHEN STANDING ON THE SCOOTER. THE "RIGHT SIDE" OF THE SCOOTER, FOR EXAMPLE, IS THE SIDE WHERE THE RIDER'S RIGHT HAND WILL BE.

2.2 Helmet Safety

A HELMET SHOULD BE WORN BY THE RIDER AT ALL TIMES.



IMPROPER POSITIONING:
THE FOREHEAD IS EXPOSED.
A FALL COULD RESULT IN
SERIOUS INJURY.



PROPER POSITIONING:
THE FOREHEAD IS
COVERED
BY THE HELMET.

**WEAR A HELMET, APPROPRIATE CLOTHING, SHOES, AND SAFETY GEAR. AVOID CLOTHING THAT CAN GET CAUGHT INTO OR UNDER THE WHEELS. CLOSED-TOE, FLAT SHOES ARE RECOMMENDED. WEAR AN ASTM F1492 APPROVED HELMET AND PROTECTIVE GEAR TO PREVENT INJURY IN THE EVENT OF AN ACCIDENT.*

2.3 Unfolding & Folding the Scooter

NOTE: WHEN UNFOLDING FOR ASSEMBLY, THE HANDLEBAR WILL NOT YET BE ATTACHED.

1. PULL OPEN THE LOCKING LATCH.
2. WHILE HOLDING THE LOCKING LATCH STEADY WITH ONE HAND, USE THE OTHER HAND TO LOOSEN THE KNOB BY TURNING IT COUNTERCLOCKWISE FOR 2 - 3 ROTATIONS.

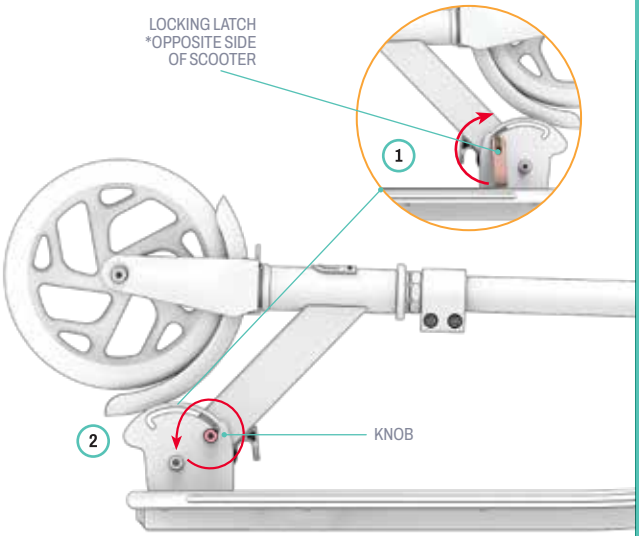

WHEN TO UNFOLD:
FOR ASSEMBLY AND RIDING



UNFOLDED

WHEN TO FOLD:
FOR STORAGE AND TRANSPORT

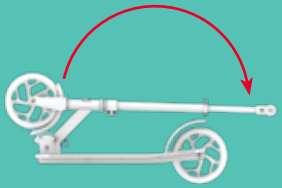

FOLDED

3. PULL THE FOLDING LEVER UP TOWARDS THE TOP OF THE STEM. (A) HOLD IT THERE WHILE YOU RAISE THE STEM UPRIGHT (TO UNFOLD THE SCOOTER) OR LOWER THE STEM TOWARDS THE DECK (TO FOLD THE SCOOTER.) (B)
4. ENSURE THAT THE STEM "CLICKS" INTO PLACE IN THE FOLDED OR UNFOLDED POSITION.
5. RELEASE THE FOLDING LEVER.
6. HOLD THE LOCKING LATCH STEADY WITH ONE HAND WHILE YOU TIGHTEN THE KNOB BY TURNING IT CLOCKWISE.
7. PUSH THE LOCKING LATCH CLOSED.
8. CHECK THAT THE STEM IS SECURE.

TROUBLESHOOTING: IF YOU CANNOT OPEN OR CLOSE THE LOCKING LATCH, THE KNOB MAY BE TOO TIGHT. LOOSEN THE KNOB BY TURNING IT COUNTERCLOCKWISE FOR ½ ROTATION AT A TIME UNTIL YOU CAN UTILIZE THE LATCH.

⚠ **WARNING:** NEVER RIDE WITHOUT THE STEM CLICKED INTO THE UPRIGHT POSITION AND THE LOCKING LATCH CLOSED AND TIGHT.

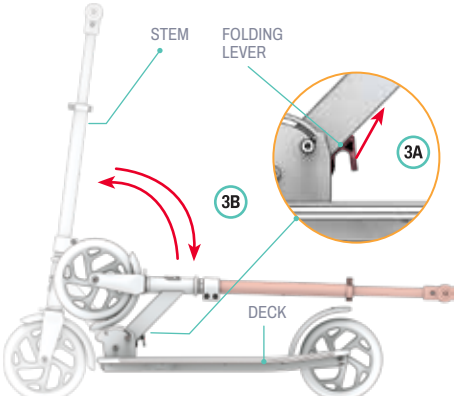

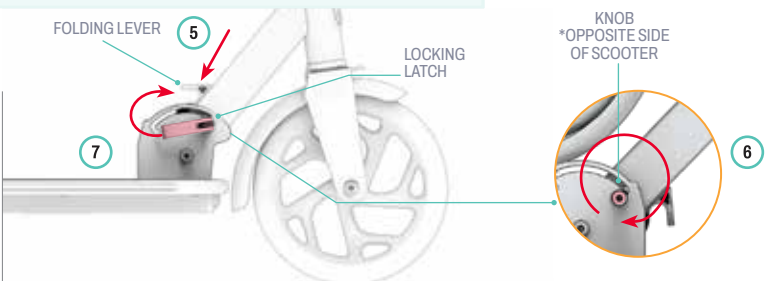

2.4 Attaching & Positioning the Handlebar

1. UNFOLD THE SCOOTER SO THAT THE STEM IS UPRIGHT (SECTION 2.3).
2. USING THE ALLEN KEY TIP OF THE 2-BIT TOOL, LOOSEN THE STEM CLAMP KNOB BY TURNING IT COUNTERCLOCKWISE.
3. PULL OPEN THE STEM CLAMP LATCH.
4. RAISE THE STEM (A) UNTIL THE STEM PIN CLICKS INTO (B) STEM PIN HOLE.

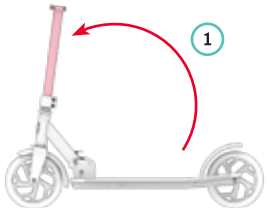

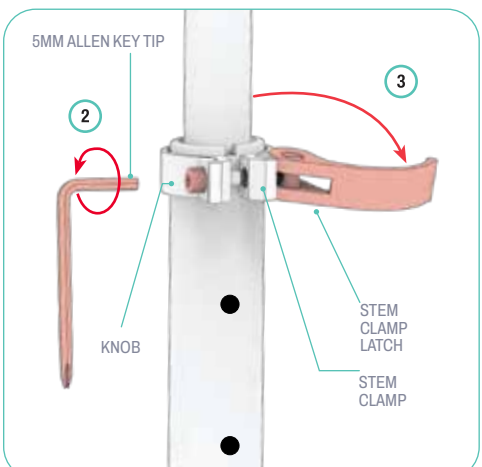

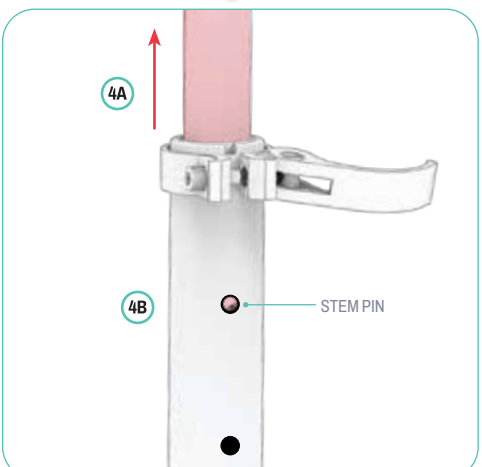

IMPORTANT: THE STEM PIN ALONE WILL NOT KEEP THE STEM SECURE. MAKE SURE THE STEM CLAMP IS TIGHTENED AND CLOSED BEFORE RIDING.

TROUBLESHOOTING: IF YOU CANNOT OPEN OR CLOSE THE LATCH, THE KNOB ON THE CLAMP MAY BE TOO TIGHT. LOOSEN THE KNOB ½ ROTATION AT A TIME UNTIL YOU CAN UTILIZE THE LATCH.

DO NOT OVER-TIGHTEN THE STEM CLAMP KNOB. OVER-TIGHTENING CAN PREVENT THE STEM CLAMP LATCH FROM OPENING AND CLOSING.

5. CLOSE THE STEM CLAMP LATCH (A) AND TIGHTEN THE KNOB BY TURNING IT CLOCKWISE WITH THE ALLEN KEY (B).

TO REPOSITION THE HANDLEBAR AFTER ASSEMBLY OR TO ACCOMMODATE RIDERS OF DIFFERENT HEIGHTS: FOLLOW INSTRUCTIONS 2 - 5. RAISE OR LOWER THE HANDLEBAR, ENSURING THAT

- THE STEM PIN IS ALWAYS IN A STEM PIN HOLE.
- THE STEM CLAMP LATCH IS CLOSED, AND THE STEM CLAMP IS TIGHT AROUND THE STEM.
- THE HANDLEBAR IS SECURE.

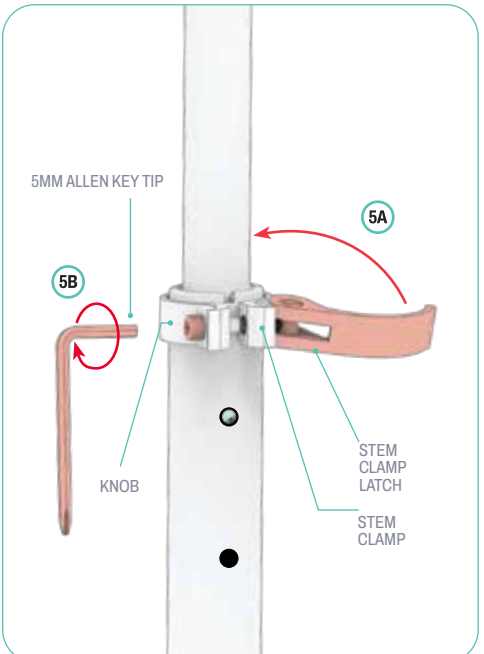

6. HOLD THE PRE-ATTACHED NUT STEADY WHILE YOU LOOSEN AND REMOVE THE PRE-ATTACHED BOLT BY TURNING IT COUNTERCLOCKWISE WITH THE SCREWDRIVER TIP OF THE 2-BIT TOOL. SET THE HARDWARE ASIDE.
7. POSITION THE HANDLEBAR BASE OVER THE TOP OF THE STEM SUCH THAT:
   - THE RAISED LINE ON THE INSIDE OF THE HANDLEBAR BASE IS IN LINE WITH THE INDENTED CHANNEL ON THE FRONT OF THE SCOOTER STEM.
   - THE HARDWARE HOLES IN THE SIDES OF THE HANDLEBAR BASE ARE ALIGNED WITH THE HARDWARE HOLES IN THE SIDES OF THE STEM
8. SLIDE THE HANDLEBAR ONTO THE SCOOTER STEM.

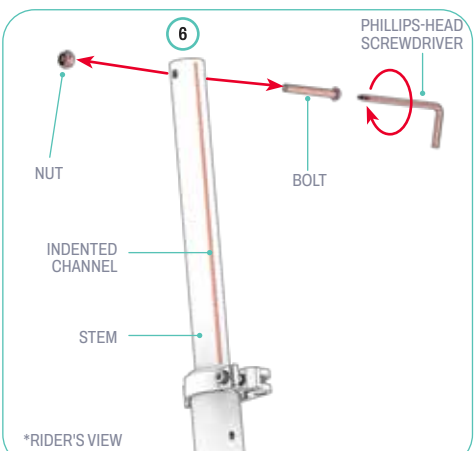

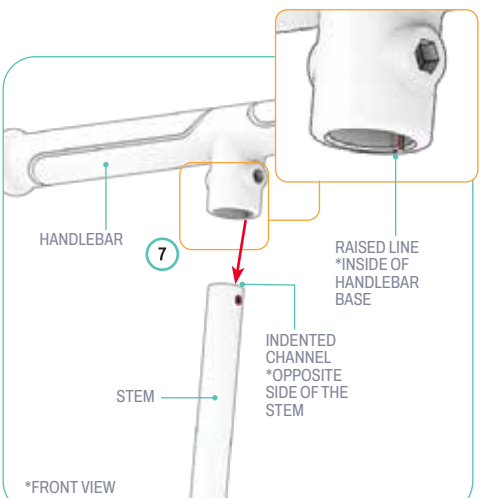

9. PUSH DOWN AND ADJUST UNTIL THE HOLES IN THE SIDES OF THE HANDLEBAR BASE ARE ALIGNED WITH THE HOLES ON THE SIDES OF THE STEM.
10. PLACE AND HOLD THE NUT AT THE END OF THE BOLT IN THE ALIGNED HOLES ON THE LEFT SIDE OF THE HANDLEBAR AS VIEWED FROM THE RIDING POSITION.
11. WITH YOUR HAND OR THE SCREWDRIVER TIP OF THE 2-BIT TOOL, TWIST THE BOLT CLOCKWISE INTO THE ALIGNED SET OF HOLES ON THE RIGHT SIDE OF THE HANDLEBAR BASE. CONTINUE TWISTING THE BOLT INTO THE NUT..
    IMPORTANT: PLACE THE BOLT ON THE **RIGHT** SIDE WHEN VIEWED FROM THE RIDING POSITION.
12. TIGHTEN THE BOLT INTO THE NUT BY TURNING IT CLOCKWISE WITH THE SCREWDRIVER TIP OF THE 2-BIT TOOL.
13. CHECK THAT THE HANDLEBAR IS SECURE.

⚠ **CAUTION:** PRIOR TO EVERY RIDE, CHECK THAT THE BOLT AND NUT ARE TIGHTENED AND SECURE.

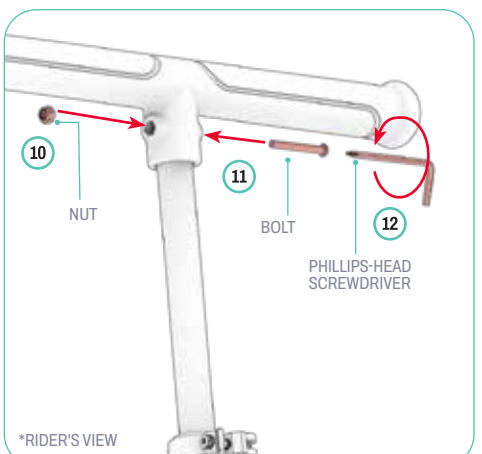

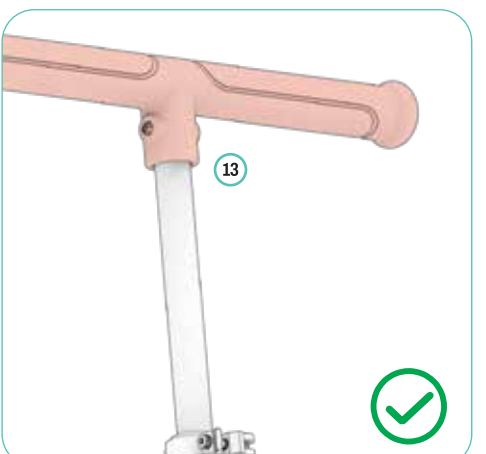

2.5 Inserting the Batteries

YOU WILL NEED 3 AA BATTERIES (NOT INCLUDED) TO OPERATE THE LIGHTS ON YOUR SCOOTER.

1. LOOSEN AND REMOVE THE SCREW SECURING THE BATTERY COMPARTMENT COVER ON THE UNDERSIDE OF THE DECK BY TURNING IT COUNTERCLOCKWISE WITH THE SCREWDRIVER TIP OF THE 2-BIT TOOL.
2. LIFT AND REMOVE THE BATTERY COMPARTMENT COVER.
3. PLACE 3 AA BATTERIES IN PLACE ACCORDING TO THE +/- ORIENTATION INDICATED INSIDE OF THE BATTERY COMPARTMENT.
4. REPLACE THE BATTERY COMPARTMENT COVER.
5. RE-INSERT THE SCREW AND TIGHTEN IT BY TURNING IT CLOCKWISE WITH THE SCREWDRIVER.
6. CHECK THAT THE COMPARTMENT COVER AND SCREW ARE SECURE.

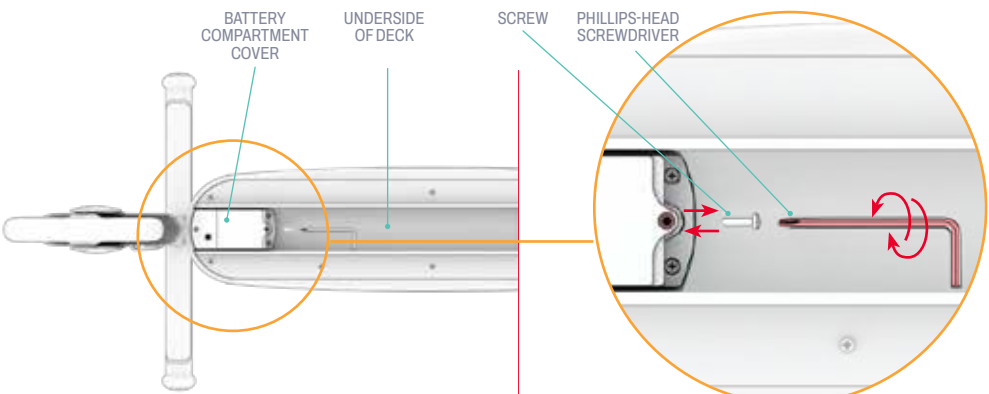

2.6 Activating the LED Lights

To Turn on the Deck Lights:

- QUICK-PRESS THE LIGHTING BUTTON.

To Change The Lights:

- CYCLE THROUGH 20 DIFFERENT LIGHTING PATTERNS BY QUICK-PRESSING THE BUTTON AGAIN.
- STOP PRESSING WHEN YOU'VE LANDED ON THE LIGHTING PATTERN THAT FEELS RIGHT FOR YOUR RIDE.

To Turn Off The Lights:

- TO POWER OFF THE LIGHTS, PRESS AND HOLD THE LIGHTING BUTTON FOR 3 SECONDS.

Intelligent Auto-Off Feature:

- AFTER 5 MINUTES OF NON-USE, THE LIGHTS WILL POWER OFF. TO REACTIVATE THE LIGHTS, QUICK-PRESS THE LIGHTING BUTTON.

IMPORTANT: REMEMBER TO TURN OFF THE LIGHTS WHEN YOU'RE DONE RIDING TO PRESERVE BATTERY LIFE.

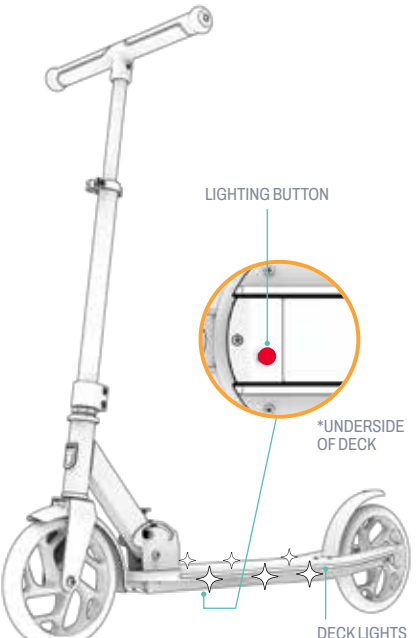

3. MAKING MOVES.

3.1 Accelerating & Keeping Momentum



- PLACE ONE FOOT ON THE FRONT OF THE DECK FACING FORWARD.
- PUSH THE OTHER FOOT OFF THE GROUND TO PROPEL THE SCOOTER FORWARD. REPEAT AS NECESSARY TO ACHIEVE OR MAINTAIN DESIRED SPEED.

3.2 Coastng



- PLACE THE KICKING FOOT ON THE DECK BEHIND THE FRONT FOOT AT A SLIGHT ANGLE FOR STABILITY.

3.3 Turning

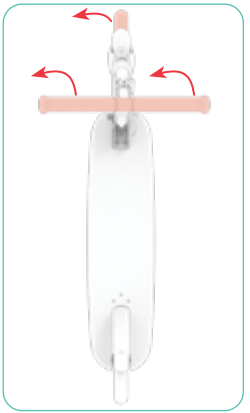

TO TURN LEFT:
ROTATE THE HANDLEBAR TO THE LEFT WHILE MOVING FORWARD.

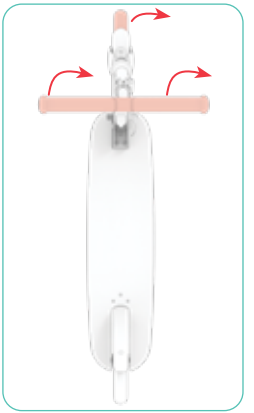

TO TURN RIGHT:
ROTATE THE HANDLEBAR TO THE RIGHT WHILE MOVING FORWARD.

3.4 Using the Brake

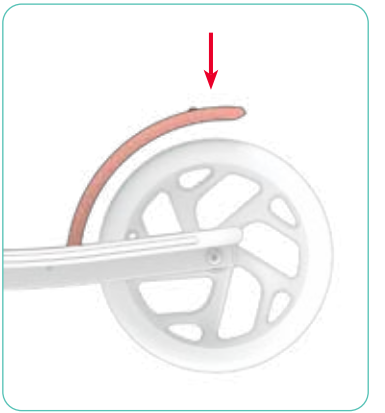

TO SLOW DOWN & STOP:

- PRESS DOWN GENTLY ON THE REAR FOOT BRAKE WITH THE REAR RIDING FOOT TO SLOW DOWN.
- APPLY MORE PRESSURE TO COME TO A COMPLETE STOP.

CARE & MAINTENANCE.

Take good care of your Jetson to keep it riding smoothly and safely. Here's how:

Cleaning Your Jetson:

- TO CLEAN THE PRODUCT, CAREFULLY WIPE WITH A DAMP CLOTH AND THEN DRY WITH A DRY CLOTH.
- DO NOT APPLY WATER DIRECTLY TO THE PRODUCT. WATER CAN CAUSE DAMAGE TO THE ELECTRICAL SYSTEM OR CAUSE FRAME DETERIORATION, WHICH COULD LEAD TO A MALFUNCTION THAT PUTS RIDER SAFETY AT RISK.

Storing Your Jetson:

- STORE THE PRODUCT INDOORS AND IN A DRY PLACE.
- COVER THE PRODUCT TO PROTECT IT AGAINST DUST.
- REMOVE BATTERIES PRIOR TO STORING THE PRODUCT FOR EXTENDED PERIODS OF TIME.

Precautions:

- KEEP AWAY FROM FIRE AND EXCESSIVE HEAT.
- AVOID INTENSE PHYSICAL IMPACT AND/OR SEVERE VIBRATION.
- RIDE THE PRODUCT ON A SMOOTH, FLAT SURFACE.
- PROTECT FROM WATER OR MOISTURE.
- CONTACT THE JETSON CARE TEAM IF THERE ARE ANY ISSUES WITH THE PRODUCT.

CONNECT WITH US.

RIDEJETSON.COM/SUPPORT
RIDEJETSON.COM/CHAT

1-844-585-7462

Be sure to follow @ridejetson on social media to learn about fantastic offers, giveaways, and all the latest Jetson news.

LOVING YOUR RIDE?

Leave a review at
ridejetson.com/reviews.
We can't wait to hear from you!
#MakeMoves


JETSON