JETSON

# Horizon X
## Electric Dirt Bike

## A guide for your ride.

IMPORTANT: READ CAREFULLY AND RETAIN FOR FUTURE REFERENCE.

MODEL SKU: JHRZNX-BLK (HORIZON X)

Jetson's top two riding rules:
**Be safe. Have fun!**

# Contents

**Safety Warnings** ..... 4

**Warranty Coverage** ..... 6

**1. About Your Product**

1.1 Product Overview ..... 8

1.2 Specs & Features ..... 10

1.3 Rider Suitability ..... 10

1.4 Online Resources ..... 11

**2. Getting Started**

2.1 Starting Notes ..... 13

2.2 Attaching the Handlebar ..... 14

2.3 Charging the Battery ..... 17

2.4 Tire Pressure & Inflation ..... 19

**3. Features & Functions**

3.1 Powering On & Off ..... 20

3.2 Checking Battery Charge Level ..... 21

3.3 Activating the Lights ..... 21

3.4 Using the Kickstand ..... 22

**4. Making Moves**

4.1 Riding ..... 23

4.2 Changing Speed Modes ..... 24

4.3 Using the Brakes ..... 25

4.4 Maximizing Speed & Run Time ..... 26

**5. Safe Journeying**

5.1 Pre-Ride Safety Checks ..... 27

5.2 Helmet Positioning ..... 28

5.3 Care & Maintenance ..... 29

# Safety Warnings

- Before use, please read the user manual and safety warnings carefully, and make sure you understand and accept all the safety instructions. The user will be responsible for any loss or damage caused by improper use.
- **Failure to use correct charger can result in fire and explosion, resulting in property damage, injury, and death.**
- Before each cycle of operation, the operator shall perform the preoperation checks specified by the manufacturer:
  That all guards and pads originally supplied by the manufacturer are in proper place and in serviceable condition;
  That the braking system is functioning properly; That any and all axle guards, chain guards, or other covers or guards supplied by the manufacturer are in place and in serviceable condition; That tires are in good condition, inflated properly, and have sufficient tread remaining; The area that the product is to be operated should be safe and suitable for safe operation.
- Components shall be maintained and repaired in accordance with the manufacturer's specifications and using only the manufacturer's authorized replacement parts with installation performed by dealers or other skilled persons.
- Don't allow hands, feet, hair, body parts, clothing, or similar articles to come in contact with moving parts, wheels, or drive train, while the bike is in use.
- This product should not be used by children or persons with reduced physical, sensory or mental capabilities, or lack of experience and knowledge, unless they have been given supervision or instruction (IEC 60335-1/A2:2006).
- Unsupervised children should not play with the product (IEC 60335-1/A2:2006).
- Adult supervision is required.
- The rider should not exceed 140 lbs.
- Never use near motor vehicle.
- Units shall not be operated to perform racing, stunt riding, or other maneuvers, which may cause loss of control, or may cause uncontrolled operator/passenger actions or reactions.
- Avoid sharp bumps, drainage grates, and sudden surface changes. Bike may suddenly stop.
- Avoid streets and surfaces with water, sand, gravel, dirt, leaves, and other debris. Wet weather impairs traction, braking and visibility.
- Avoid riding around flammable gas, steam, liquid, or dust that could cause fire.
- Operators shall adhere to all of the manufacturer's recommendations and instructions, as well as comply with all laws and ordinances: Units without headlights shall be operated only with adequate daylight conditions of visibility, and; Owners shall be encouraged to highlight (for conspicuity) using lighting, reflectors, and for low-riding units, signal flags on flexible poles.
- Do not ride at night.
- Only ride the product with adequate daylight conditions for visibility.
- Persons with the following conditions shall be cautioned not to operate: Those with heart conditions; Pregnant women;
  Persons with head, back, or neck ailments, or prior surgeries to those areas of the body; and persons with any mental or physical conditions that may make them susceptible to injury or impair their physical dexterity or mental capabilities to recognize, understand, and perform all of the safety instructions and to be able to assume the hazards inherent in unit use.
- Do not ride after drinking or taking prescription medication.
- Do not carry items when riding.
- Never operate the product barefooted.
- Always wear shoes and keep shoelaces tied.
- Make sure your feet are always placed securely on the pedals.
- Operators always shall use appropriate protective clothing, including but not limited to a helmet, with appropriate certification, and any other equipment recommended by the manufacturer: Always wear protective equipment such as helmet, knee pads, and elbow pads.
- Always give way to pedestrians.
- Be alert to things in front and far away from you.
- Do not allow distractions when riding, such as answering the phone or engaging in any other activities.
- The product cannot be ridden by more than one person.
- When you ride the product along with other riders, always keep a safe distance to avoid a collision.
- When turning, be sure to maintain your balance.
- Riding with improperly adjusted brakes is dangerous and can result in serious injury or death.

- Applying brakes too hard or too suddenly can lock up a wheel, which could cause you to lose control and fall. Sudden or excessive application of the brake may result in injury or death.
- If the brake loosens, please adjust with the hexagon wrench, or please contact the Jetson Care Team.
- Replace worn or broken parts immediately.
- The area that the product is to be operated should be safe and suitable for safe operation.
- Check whether all safety labels are in place and understood before riding.
- The owner shall allow the use and operation of the unit after a demonstration that such operators can understand and operate all components of the unit before use.
- Use caution when changing the batteries. Do not change batteries near flammable materials. Remove batteries from the bike when not in use for long periods of time.
- Prolonged exposure to UV rays, rain and the elements may damage the enclosure materials, store indoors when not in use.
- Devices are not intended for use at elevations greater than 2000 m above sea level.
- WARNING – Risk of Fire and Electric Shock – No User Serviceable Parts.
- AVERTISSEMENT- Risque d'incendie et de choc électrique - Aucune des pièces ne peut être réparée par l'utilisateur.

## MODIFICATIONS

Do not attempt to disassemble, modify, repair, or replace the product or any components of the unit without instruction from the Jetson Care Team. This will void any warranty, and can lead to malfunctions which may cause injury.

## ADDITIONAL OPERATION PRECAUTIONS

- Do not lift the product off the ground while it is on and the wheels are in motion. This can result in freely spinning wheels, which may cause injury to yourself or others nearby.
- Do not jump on or off the product, and do not jump while using it.
- Always keep your feet firmly planted on the pedals while in operation.
- The Consumer Product Safety Commission advises that the riding of small wheel diameter bicycles at excessive speeds can lead to instability and is not recommended.
- Always wear a properly fitted helmet when you ride your bicycle. Do not ride at night. Avoid riding in wet conditions.

## MAINTENANCE PRECAUTIONS

For all maintenance repairs and needs beyond the capability of the consumer which may include but not limited to such as proper maintenance of brakes, control cables, bearing adjustments, wheel adjustments, lubrication, reflectors, tires and handlebar and seat adjustments, please contact the Jetson Care Team for assistance at:

ridejetson.com/chat
ridejetson.com/support
US & Canada 1-(888) 976-9904

## DISPOSAL OF USED BATTERY



Battery may contain hazardous substances which could endanger the environment and human health. This symbol marked on the battery and/or packaging indicates that used battery shall not be treated as municipal waste. Batteries should be disposed of at an appropriate collection point for recycling. By ensuring the used batteries are disposed of correctly, you will help preventing potential negative consequences for the environment and human health. The recycling of materials will help to conserve natural resources. For more information about recycling of used batteries, please contact your local municipality waste disposal service.

**California Proposition 65**

# ⚠WARNING:

This product can expose you to chemicals including Cadmium, which is known to the State of California to cause cancer and birth defects or other reproductive harm. For more information go to: www.P65Warnings.ca.gov.

## Warranty Coverage

**GENERAL LIMITED WARRANTY**

Your new Jetson product is warranted against defects in materials and workmanship as indicated on ridejetson.com/warranty for a period of time from the date of original retail purchase when used in accordance with Jetson's user manuals (refer to ridejetson.com/support). **Under this warranty, you will be able to direct your claims to Jetson even in situations where you purchased the Jetson Product from one of our authorized retailers.** To read the full terms of our warranty, visit ridejetson.com/warranty.

# 1. About Your Product

## 1.1 Product Overview

1. WHEEL (X2; FRONT AND REAR)
2. TIRE VALVE WITH DUST CAP (X2; FRONT AND REAR)
3. FRONT PLATE
4. HEADLIGHT
5. HANDLEBAR*
6. HANDLEBAR CLAMP* (X2; LEFT AND RIGHT)
7. POWER BUTTON
8. LIGHTING BUTTON
9. ACCELERATION THROTTLE
10. HANDBRAKE (X2; LEFT AND RIGHT)
11. BATTERY CHARGE DISPLAY
12. MUDGUARD
13. FRONT FORK
14. KICKSTAND
15. SHOCK ABSORBER
16. FRAME LIGHTS
17. SEAT
18. CHARGING PORT WITH COVER
19. SPEED MODE SWITCH
20. CHAIN
21. FLEX FOOT PEG (X2; LEFT AND RIGHT)
22. CHARGER

* NOT PRE-ATTACHED; REQUIRES SET-UP.

**INCLUDED FOR ASSEMBLY:**



BOLT (X4)

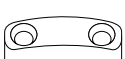

CLAMP TOP (X2)



6MM ALLEN KEY

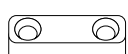

CLAMP BASE (X2)

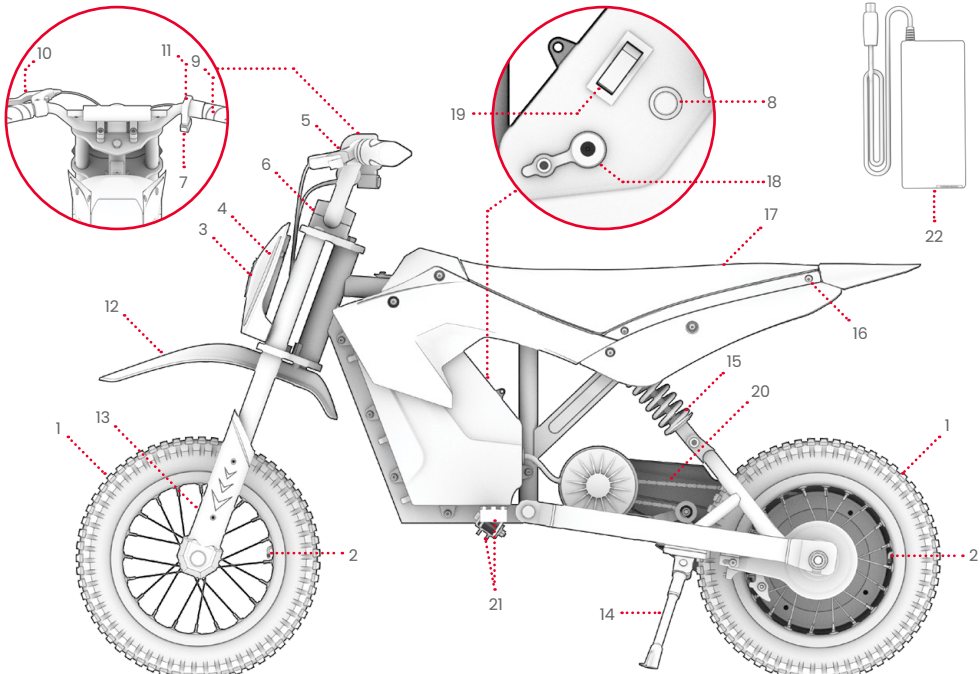


NOTE: IMAGES MAY NOT REFLECT EXACT APPEARANCE OF ACTUAL PRODUCT.

## 1.2 Specs & Features

- PRODUCT DIMENSIONS: 43.3″ (L) X 23.6″ (W) X 27.5″ (H)
- HANDLEBAR HEIGHT: 31.5″
- SEAT HEIGHT: 21.1″
- PRODUCT WEIGHT: 39.4 LB
- TIRE SIZE: 12″
- BRAKE TYPE: HANDBRAKE
- WEIGHT LIMIT: 140 LB
- MINIMUM RIDER WEIGHT: 44 LB
- RECOMMENDED AGE: 13+
- MAX SPEED: 14.0 MPH*
- MAX RUN TIME: 30 MINS.*
- CHARGING TIME: ABOUT 4 HOURS
- RECOMMENDED TIRE PRESSURE: 36 - 45 PSI
- WATER RESISTANCE RATING: IPX4
- UL CERTIFICATION: UL2271
- CHARGER: UL LISTED, 42VDC 1.0A

* PRODUCT RUN TIME, SPEED, BATTERY LIFE, AND OTHER SPECIFICATIONS MAY VARY BASED ON RIDER AND RIDING CONDITIONS. SEE SECTION 4.4 FOR MORE DETAILS ON CONDITIONS THAT CAN AFFECT PERFORMANCE.

## 1.3 Rider Suitability

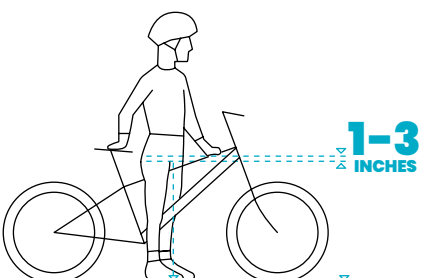


FOR SAFE AND COMFORTABLE RIDING, THERE SHOULD BE A CLEARANCE OF AT LEAST 1 - 3 INCHES BETWEEN THE CROTCH AND THE TOP TUBE OF THE BIKE FRAME WHEN THE RIDER STRADDLES THE BIKE WITH BOTH FEET FLAT ON THE GROUND.

## 1.4 Online Resources



Scan for our most updated Horizon X onboarding materials and support resources.

# 2. Getting Started

## 2.1 Starting Notes

- KICK OFF YOUR ADVENTURE RIGHT: PRIOR TO USE OF THIS PRODUCT, CAREFULLY READ THE ENTIRE USER MANUAL, INCLUDING SAFETY WARNINGS. MAKE SURE YOU UNDERSTAND, ACCEPT, AND ADHERE TO ALL:
  - MANUFACTURER'S RECOMMENDATIONS.
  - SAFETY INSTRUCTIONS AND WARNINGS.
  - LOCAL RIDING AND OPERATIONAL LAWS AND ORDINANCES.

- REMOVE ALL PACKAGING BEFORE BEGINNING ASSEMBLY.

- THE DIRECTIONS GIVEN IN THIS MANUAL—RIGHT, LEFT, FRONT/FORWARD, AND REAR/BACK—ARE ORIENTED AS THE RIDER WOULD SEE THEM WHEN SEATED ON THE BIKE. THE "RIGHT SIDE" OF THE BIKE, FOR EXAMPLE, IS THE SIDE WHERE THE RIDER'S RIGHT HAND AND FOOT WILL BE.

- IT IS EASIER TO ASSEMBLE YOUR DIRT BIKE WITH IT PROPPED UPRIGHT ON ITS KICKSTAND. (SECTION 3.4)

**⚠WARNING:**

FAILURE TO COMPLY WITH THE FOLLOWING INSTRUCTIONS MAY RESULT IN INJURY TO THE CHILD OR OTHERS.
- KEEP SMALL PARTS AWAY FROM CHILDREN DURING ASSEMBLY.
- ACCESSORY MUST BE ASSEMBLED AND REMOVED BY AN ADULT.
- FREQUENTLY INSPECT THE PRODUCT FOR DAMAGE.

* ADULTS MUST ASSIST CHILDREN IN THE ASSEMBLY AND INITIAL ADJUSTMENT PROCEDURES OF THE PRODUCT.

## 2.2 Attaching the Handlebar

1. SEPARATE THE CLAMP BASES (ON WHICH THE LONG SIDE IS FLAT) FROM THE CLAMP TOPS (ON WHICH THE LONG SIDE IS SLIGHTLY ROUNDED.)
2. POSITION THE 2 CLAMP BASES ON THE HANDLEBAR PLATFORM SUCH THAT THE FLAT SIDE IS RESTING ON THE PLATFORM AND THE 2 HOLES IN EACH CLAMP BASE ARE ALIGNED WITH THE 2 HOLES ON EACH SIDE OF THE HANDLEBAR PLATFORM.

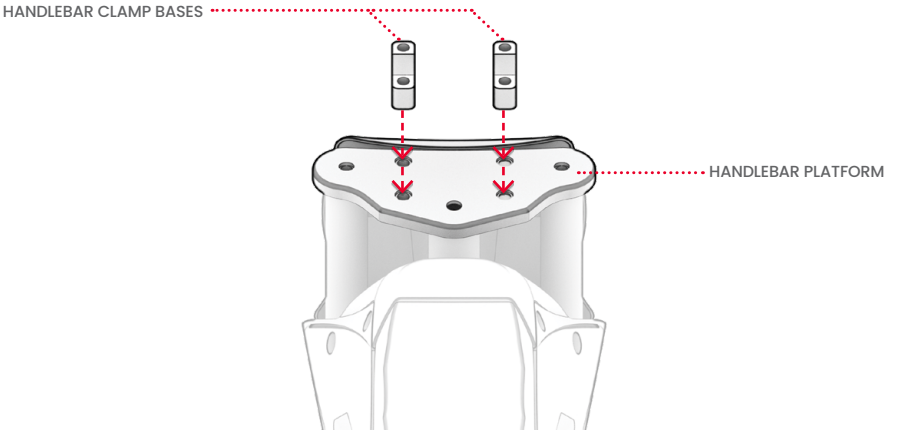

3. WITHOUT DISTURBING THE CLAMP BASES, LIFT THE HANDLEBAR ONTO THE BASES SUCH THAT THE FOLLOWING CONDITIONS ARE MET:
   - THE BATTERY CHARGE DISPLAY IS ON THE RIGHT SIDE AS VIEWED FROM THE RIDING POSITION.
   - THE TWO GROOVED AREAS AT THE BOTTOM OF THE HANDLEBAR ARE RESTING IN THE CLAMP BASES.
   - THE WIRES AND CABLES ARE CLEAR OF OBSTRUCTION AND IN FRONT OF THE HANDLEBAR.
4. HOLDING THE HANDLEBAR IN THAT POSITION, PLACE 1 CLAMP TOP OVER THE GROOVED AREA SUCH THAT THE 2 HOLES IN THE CLAMP TOP ARE ALIGNED WITH THE 2 HOLES IN THE CLAMP BASE.
5. INSERT BUT DO NOT FULLY TIGHTEN 1 BOLT INTO EACH SET OF ALIGNED HOLES BY TURNING IT CLOCKWISE WITH THE 6 MM ALLEN KEY.
6. REPEAT STEPS 3 – 4 WITH THE OTHER CLAMP TOP AND REMAINING 2 BOLTS.

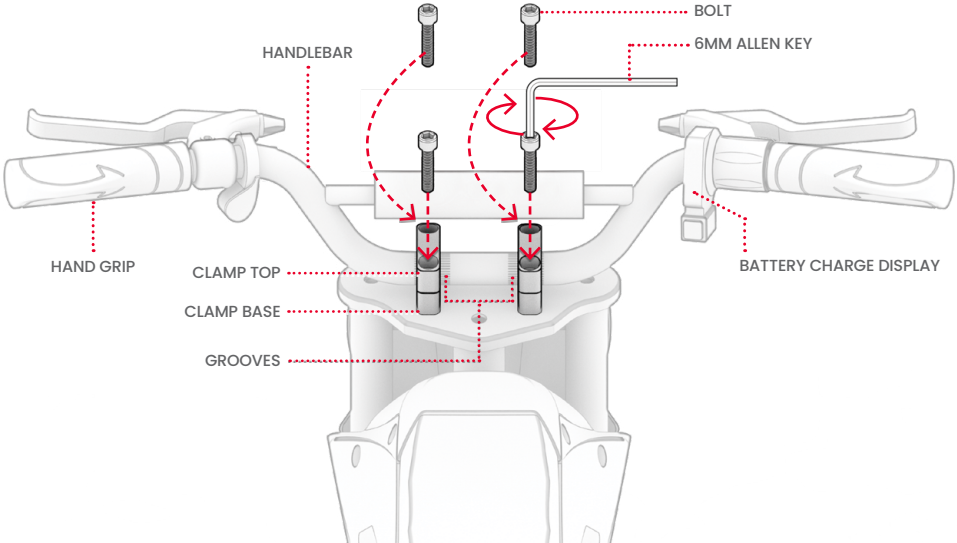

7. ROTATE THE HANDLEBAR WITHIN THE CLAMP BASES UNTIL IT SITS IN A "U" SHAPE WITH THE HAND GRIPS HIGHER THAN THE CENTER, AND IS IDEALLY POSITIONED FOR THE RIDER.
   **IMPORTANT:** THE HANDLEBAR SHOULD BE POSITIONED SUCH THAT THE HANDBRAKES ARE EASY FOR THE RIDER TO REACH AND COMPRESS.
8. FULLY TIGHTEN ALL 4 BOLTS BY TURNING EACH CLOCKWISE WITH THE ALLEN KEY.
9. CHECK THAT THE HANDLEBAR IS SECURE.

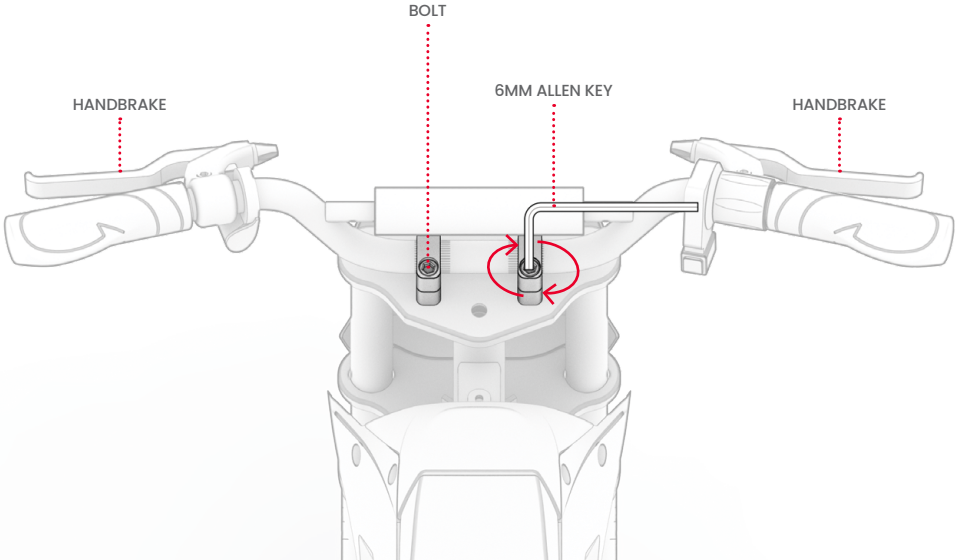

## 2.4 Charging the Battery

**IMPORTANT:** PRIOR TO THE FIRST USE OF THIS PRODUCT, CHARGE THE BATTERY FOR **12–15 HOURS**, EVEN IF THE CHARGING INDICATOR LIGHT IS ILLUMINATED GREEN, INDICATING THAT CHARGING IS COMPLETE.

**AFTER THE INITIAL CHARGING SESSION, AND FOR ALL SUBSEQUENT CHARGING SESSIONS, CHARGE THE BATTERY UNTIL IT REACHES FULL CHARGE. FOR A FULLY DEPLETED BATTERY, THAT TAKES ABOUT 4 HOURS.**

1. PULL OPEN THE CHARGING PORT COVER ON YOUR HORIZON.
2. PLUG THE CHARGER INTO THE WALL, AND THEN PLUG THE CHARGING CABLE INTO THE CHARGING PORT.
3. WHEN THE INDICATOR LIGHT ON THE CHARGER CHANGES FROM RED TO GREEN, YOUR BATTERY HAS REACHED FULL CHARGE. REMOVE THE CHARGING CABLE FROM THE CHARGING PORT AND UNPLUG THE CHARGER FROM THE WALL OUTLET.
4. CLOSE THE CHARGING PORT COVER.

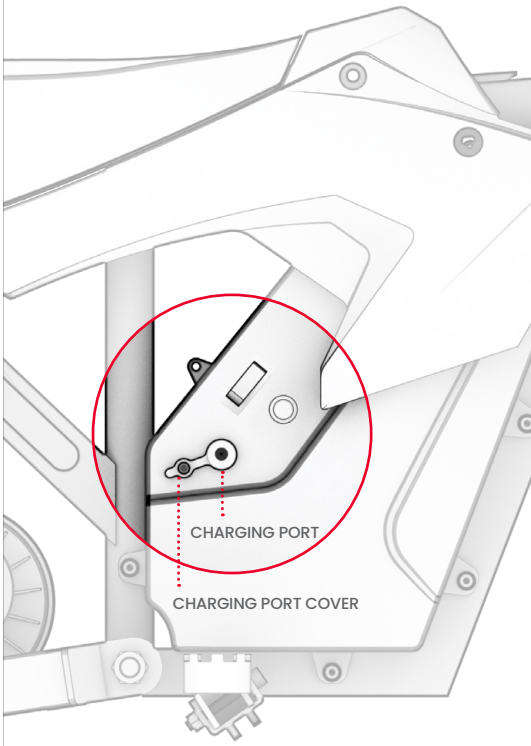

**IMPORTANT CHARGING NOTES:**

- ONLY USE THE INCLUDED CHARGER OR ONE OBTAINED DIRECTLY THROUGH JETSON MANUFACTURED BY COMING DATA AND LABELED WITH: CP4210.

  ⚠ FAILURE TO USE CORRECT CHARGER CAN RESULT IN FIRE AND EXPLOSION.

- ALWAYS KEEP THE CHARGING PORT CLOSED WHEN NOT ACTIVELY CHARGING YOUR HORIZON.
- NEVER TURN ON YOUR PRODUCT WHILE IT IS CHARGING.
- FOR BEST BATTERY HEALTH, CHARGE THE BATTERY FULLY DURING EACH CHARGING SESSION—ABOUT 4 HOURS.
- NEVER LEAVE YOUR HORIZON CHARGING OVERNIGHT OR FOR EXTENDED PERIODS OF TIME.
- DO NOT ATTEMPT TO REMOVE OR DISASSEMBLE THE BATTERY.
- CHARGING AMBIENT TEMPERATURE RANGE: 32°F(0°C)-104°F(40°C)
- OPERATING AMBIENT TEMPERATURE RANGE: 32°F(0°C)-104°F(40°C)

**CHARGER INDICATOR LIGHT ON THE CHARGER:**

- CHARGING

- CHARGING COMPLETE

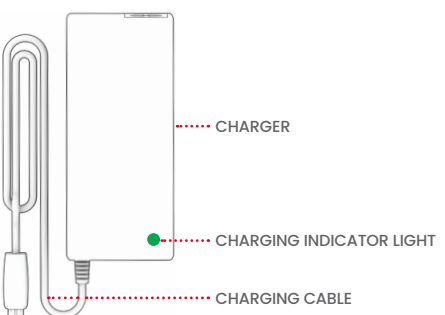


THIS IS THE MARKING YOUR CHARGER WILL HAVE.

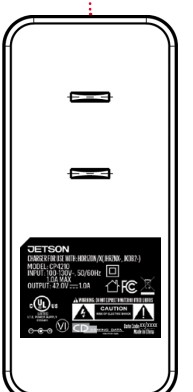

## 2.5 Tire Pressure & Inflation

BEFORE YOUR FIRST RIDE, YOU WILL NEED TO ADD AIR TO YOUR TIRES TO BRING THEM TO WITHIN THE RECOMMENDED PRESSURE OF **36 - 45 PSI** (POUNDS PER SQUARE INCH). USE A GAUGE TO CHECK THAT THE TIRE PRESSURE FALLS WITHIN THIS RANGE PRIOR TO EVERY RIDE.

**TO ADD AIR:**

1. REMOVE THE DUST CAP FROM THE TIRE VALVE ON ONE WHEEL BY TWISTING IT COUNTERCLOCKWISE. SET ASIDE.
2. FOLLOW THE MANUFACTURER'S INSTRUCTIONS ON YOUR AIR PUMP TO INSERT AIR INTO THE TIRE. CHECK PERIODICALLY WITH A GAUGE AND CONTINUE ADDING AIR UNTIL YOU REACH 36 - 45 PSI.
3. REMOVE THE AIR PUMP FROM THE VALVE AND REPLACE THE DUST CAP BY TWISTING IT CLOCKWISE ONTO THE VALVE.
4. REPEAT WITH THE OTHER TIRE.

**IMPORTANT:** ONLY USE A MANUAL AIR PUMP TO INFLATE THE TIRES. NEVER USE AN AIR COMPRESSOR; DOING SO MAY CAUSE THE TIRE TUBES TO POP.

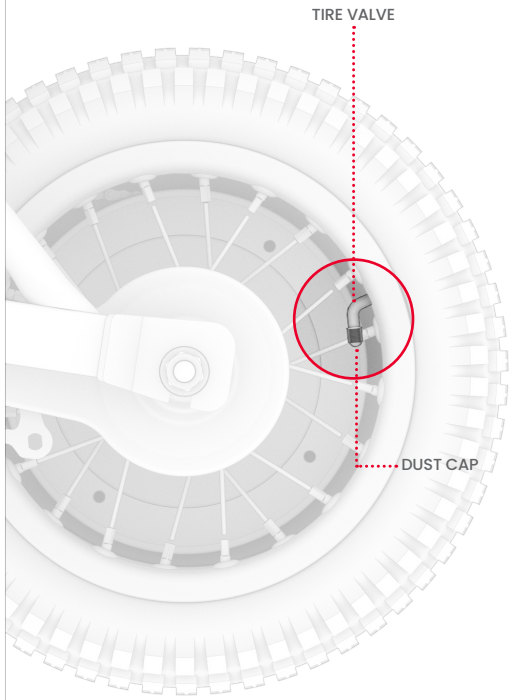

# 3. Features & Functions

## 3.1 Powering On & Off

PRESS AND HOLD THE POWER BUTTON FOR 3 SECONDS TO TURN YOUR DIRT BIKE ON OR OFF.

TO PRESERVE BATTERY POWER, ALWAYS REMEMBER TO POWER YOUR DIRT BIKE OFF WHEN MAKING A PIT STOP OR PUTTING IT AWAY FOR THE NIGHT.

**NOTE:** THE DIRT BIKE WILL AUTOMATICALLY POWER OFF AFTER 8 MINUTES WITHOUT USE.
**IMPORTANT:** POWER OFF YOUR DIRT BIKE WHEN WALKING WITH IT SO AS NOT TO ENGAGE THE MOTOR BY INADVERTENTLY TWISTING THE ACCELERATION THROTTLE.

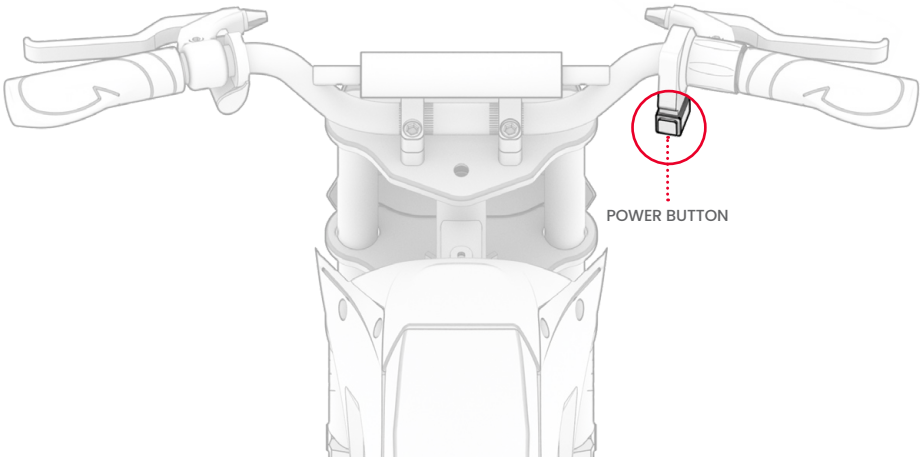

## 3.2 Checking Battery Charge Level

YOU CAN KEEP TABS ON YOUR BATTERY'S CHARGE LEVEL BY LOOKING TO THE INDICATOR LIGHTS ON THE HANDLEBAR.

| **NUMBER OF LIGHTS ILLUMINATED** | ●●●● | ●●● | ●● | ● |
|---|---|---|---|---|
| **CHARGE PERCENTAGE** | 76 - 100% | 51 - 75% | 26 - 50% | LESS THAN 25 % (CHARGE YOUR DIRT BIKE NOW!) |

**IMPORTANT:** WHEN THE BATTERY CHARGE DEPLETES TO 0%, THE BIKE WILL POWER OFF. CHARGE TO FULL POWER (SEE SECTION 2.4) PRIOR TO YOUR NEXT RIDE.

## 3.3 Activating the Lights

QUICK-PRESS THE LIGHTING BUTTON TO TURN THE LIGHTS ON OR OFF.

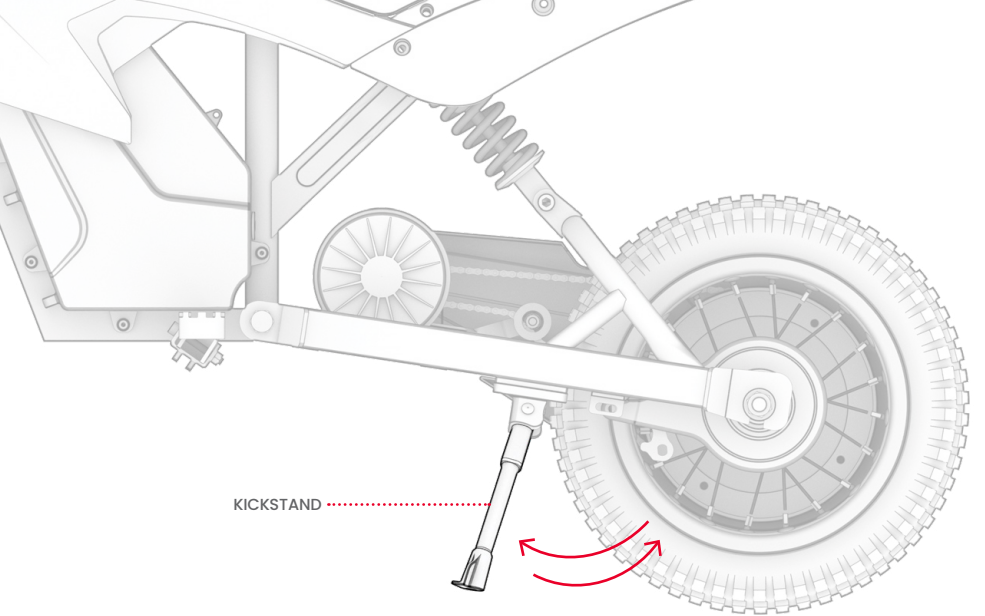


## 3.4 Using the Kickstand

TO PROP THE HORIZON UPRIGHT ON THE KICKSTAND, PIVOT THE KICKSTAND DOWN AND GENTLY TILT THE DIRT BIKE ONTO IT. TO RAISE THE KICKSTAND, PIVOT IT BACK UP.

**IMPORTANT:** ALWAYS RAISE THE KICKSTAND BEFORE RIDING.

# 4. Making Moves

## 4.1 Riding

⚠ **IMPORTANT:**

- ALWAYS RIDE WITH YOUR FEET RESTING ON THE FOOT PEGS. NEVER RIDE WITH THEM DANGLING OFF THE SIDE OF THE BIKE.
- THIS PRODUCT SHOULD NOT BE RIDDEN IN AREAS DENSE WITH PEDESTRIANS OR ON ROADWAYS WITH CARS AND VEHICLE TRAFFIC.

**TO START AND ACCELERATE:** SLOWLY ROTATE THE TWIST THROTTLE TOWARDS YOU.
**IMPORTANT:** THE MORE YOU ROTATE THE THROTTLE, THE MORE THE MOTOR WILL ENGAGE—AND THE FASTER YOU WILL TRAVEL. TO AVOID SUDDEN BURSTS OF SPEED, ALWAYS ROTATE THE THROTTLE GRADUALLY.

**TO MAINTAIN SPEED:** HOLD THE THROTTLE STEADY.

**TO SLOW DOWN:** GENTLY EASE UP ON THE THROTTLE.

**TO TURN:** ROTATE THE HANDLEBAR TO THE LEFT OR RIGHT.

## 4.2 Changing Speed Modes

THERE ARE 3 SPEED MODES, EACH OF WHICH HAS A MAXIMUM SPEED AT WHICH THE DIRT BIKE CAN TRAVEL.

TO CHANGE SPEED MODES, TOGGLE THE SPEED MODE SWITCH.

| MODE 1 | MODE 2 | MODE 3 |
|---|---|---|
| UP TO 5.0 MPH | UP TO 7.5 MPH | UP TO 14.0 MPH |

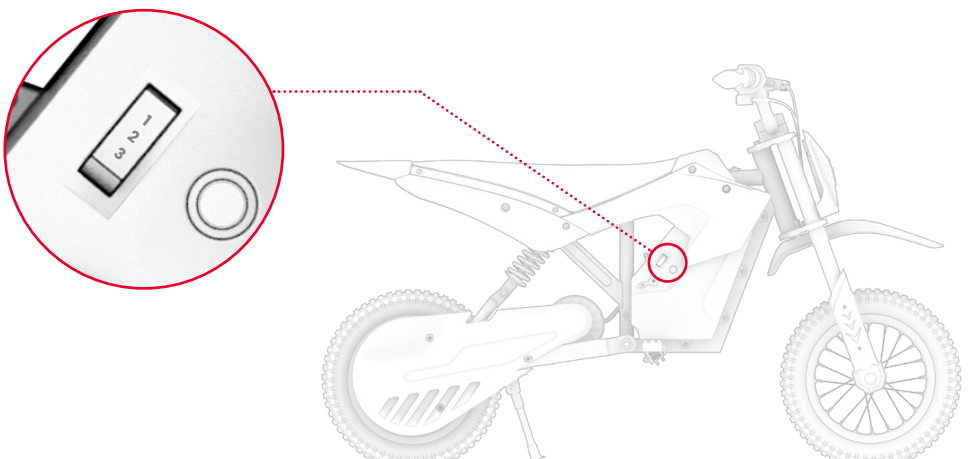

## 4.3 Using the Brakes

SQUEEZE THE HANDBRAKES GENTLY TO SLOW DOWN; SQUEEZE MORE FORCEFULLY TO COME TO A COMPLETE STOP.

TO AVOID ABRUPT MOVEMENTS, ALWAYS SQUEEZE THE HANDBRAKES GRADUALLY.

- LEFT HANDBRAKE ➔ FRONT WHEEL BRAKE
- RIGHT HANDBRAKE ➔ REAR WHEEL BRAKE

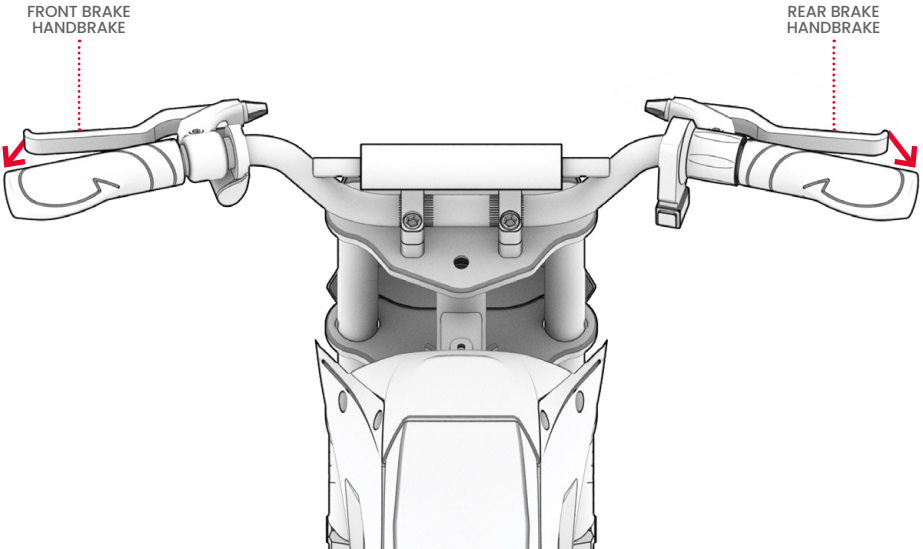

## 4.4 Maximizing Speed & Run Time

IN IDEAL CONDITIONS, THE MAXIMUM SPEED THAT CAN BE ACHIEVED IS 14.0 MILES PER HOUR (MPH) AND THE MAXIMUM RUN TIME PER BATTERY CHARGE IS 30 MINUTES.

THE HARDER THE MOTOR NEEDS TO WORK, THE FASTER YOUR BATTERY WILL DRAIN AND THE HARDER IT WILL BE TO REACH AND MAINTAIN TOP SPEEDS. THE FOLLOWING FACTORS WILL ALSO AFFECT HOW FAST YOU CAN TRAVEL AND HOW LONG CAN RIDE FROM A SINGLE CHARGE.

- **RIDING SURFACE** – TRAVELING OVER A ROUGH SURFACE CAUSES FRICTION, WHICH CAN SLOW YOU DOWN AND REQUIRES THE MOTOR TO WORK HARDER, WHICH DRAINS IT FASTER. WHEN POSSIBLE, CHOOSE A SMOOTH RIDING SURFACE.
- **CARRYING WEIGHT** – MORE WEIGHT (RIDER PLUS CARGO) DECREASES ACHIEVABLE SPEED AND RUN TIME.
- **RIDING STYLE** – FREQUENT STARTING AND STOPPING WILL REDUCE RUN TIME.
- **AIR TEMPERATURE** – THE IDEAL TEMPERATURE FOR RIDING AND STORING THE HORIZON IS BETWEEN 50 - 75°F (10 - 23.9°C).
- **INCLINE** – THE MOTOR HAS TO WORK HARDER WHEN YOU RIDE UPHILL, AND GOING AGAINST GRAVITY MAKES IT HARD TO HIT THE MAXIMUM ACHIEVABLE SPEED. RIDE ON FLAT SURFACES WHEN POSSIBLE.
- **BATTERY MAINTENANCE** – TIMELY BATTERY CHARGING AFTER EVERY RIDE HELPS MAINTAIN BATTERY CAPACITY AND STRENGTH.

# 5. Safe Journeying

## 5.1 Pre-Ride Safety Checks

CONDUCT THESE IMPORTANT SAFETY CHECKS BEFORE EVERY JOURNEY:

**BRAKES**

MAKE SURE THE BRAKES WORK PROPERLY SUCH THAT:

- THE HANDBRAKE LEVERS ARE SECURED TO THE HANDLEBAR AND LUBRICATED SO THEY CAN COMPRESS EASILY.
- THE BRAKES SMOOTHLY AND SAFELY BRING THE WHEELS TO A STOP WHEN COMPRESSED.

**FOOT PEGS**

- CHECK THAT THE FOOT PEGS ARE SECURELY TIGHTENED TO THE FRAME.

**FRAME & FORK**

- CHECK THAT THE FRAME AND THE FORK ARE NOT DAMAGED, BENT, OR BROKEN.

**STEERING**

- CHECK THAT THE HANDLEBAR AND WHEEL ROTATE IN ALIGNMENT.
- CHECK THAT THE HANDLEBAR IS SECURED IN POSITION BY THE HANDLEBAR CLAMPS.

**WHEELS AND TIRES**

- CHECK THAT TIRES DO NOT SHOW SIGNS OF EXCESSIVE WEAR OR ARE DAMAGED.
- MAKE SURE THAT THE TIRES ARE INFLATED TO WITHIN THE RECOMMENDED PRESSURE OF 36 - 43 PSI.
- CHECK THAT THE WHEEL SPOKES ARE NOT BROKEN.
- CHECK THE WHEEL RIMS ARE NOT DAMAGED OR BENT.
- CHECK THAT THE AXLE NUTS ARE TIGHT.
- CHECK THAT THE WHEELS AND TIRES ARE CLEAR OF DEBRIS.

**CHAIN**

- CHECK THAT THE CHAIN IS PROPERLY SITUATED AND ROTATES EASILY.
- CHECK THAT THE CHAIN AND CHAIN AREA ARE FREE OF DEBRIS.

## 5.2 Helmet Safety

A HELMET SHOULD BE WORN BY THE RIDER AT ALL TIMES.



PROPER POSITIONING:
THE FOREHEAD IS COVERED
BY THE HELMET.



IMPROPER POSITIONING:
THE FOREHEAD IS EXPOSED.
A FALL COULD RESULT IN SERIOUS INJURY.

*** WEAR A HELMET, APPROPRIATE CLOTHING, SHOES, AND SAFETY GEAR. AVOID CLOTHING THAT CAN GET CAUGHT INTO OR UNDER THE WHEELS. CLOSED-TOE, FLAT SHOES ARE RECOMMENDED. WEAR AN ASTM F1492 APPROVED HELMET AND PROTECTIVE GEAR TO PREVENT INJURY IN THE EVENT OF AN ACCIDENT.**

## 5.3 Care & Maintenance

TAKE GOOD CARE OF YOUR HORIZON TO KEEP IT RIDING SMOOTHLY AND SAFELY. HERE'S HOW:

**HANDLING YOUR HORIZON X**

- AVOID EXPOSING YOUR PRODUCT TO SEVERE VIBRATION OR INTENSE PHYSICAL IMPACT.
- NEVER DISASSEMBLE YOUR PRODUCT'S BATTERY.
- KEEP YOUR PRODUCT AWAY FROM WATER AND MOISTURE.
- RIDE ON SMOOTH, FLAT SURFACES TO AVOID BREAKAGE.
- NEVER CARRY YOUR PRODUCT BY THE WHEELS, SEAT, AND/OR HANDLEBAR.
- TAKE CARE NOT TO PULL OR SNAG THE WIRING CONNECTING THE MOTOR WITH THE HANDLEBAR COMPONENTS.

**STORING YOUR HORIZON X**

KEEP YOUR HORIZON X:

- INDOORS AND IN A DRY PLACE.
- COVERED, TO PROTECT IT FROM DUST.
- AWAY FROM FIRE OR EXCESSIVE HEAT.
- AT A TEMPERATURE BETWEEN 50 AND 75°F.

**CLEANING YOUR HORIZON X**

DO NOT SPRAY OR APPLY WATER DIRECTLY ONTO TO THE PRODUCT. WATER CAN CAUSE DAMAGE TO THE WIRING, BATTERY COMPARTMENT, AND LIGHTS, AS WELL AS DETERIORATION OF THE FRAME—ALL OF WHICH COULD CAUSE A MALFUNCTION THAT PUTS RIDER SAFETY AT RISK. HERE'S HOW TO CLEAN YOUR PRODUCT:

- **SEAT AND FRAME:** WIPE WITH A DAMP DUST-FREE CLOTH OR ONE DIPPED IN RUBBING ALCOHOL. FOLLOW WITH A DRY DUST-FREE CLOTH.
- **HANDLEBAR:** WIPE DOWN WITH MILD SOAP USING A DAMP DUST-FREE CLOTH. REMOVE EXCESS SOAP WITH A SEPARATE DAMP CLOTH.
- **WHEEL COMPONENTS:** REMOVE DEBRIS. WIPE WITH A DAMP, DUST-FREE CLOTH.
- **TIRES:** REMOVE DIRT AND DEBRIS FROM WITHIN THE TREADS. WIPE WITH A DAMP, DUST-FREE CLOTH. A TIRE FINISHER OR CLEANER CAN ALSO BE USED.

## Stay connected.

Be sure to follow **@ridejetson**
on social media to learn about fantastic offers,
giveaways, and all the latest Jetson news.



## Loving your ride?

Then be sure to leave a review at ridejetson.com/reviews.
We can't wait to hear from you!

JETSON

**#MakeMoves**

# Questions? Let us help.

**ridejetson.com/support**
**ridejetson.com/chat**

To exercise your product's warranty or inquire about warranty coverage, contact us directly.

1-888-976-9904

Manufactured in Zhejiang, China
Imported by Jetson Electric Bikes LLC.
P.O. Box 320149, 775 4th Ave #2,
Brooklyn, NY 11232

www.ridejetson.com





Made in China
Date Code: 07/2024
Document Edition: v1.0

© 2024, JETSON. ALL RIGHTS RESERVED. Manufactured by JETSON ELECTRIC BIKES LLC.
No portion of this document, including shape, copy, graphics, and design, may be reproduced or transmitted in any form or by any means.