JETSON

Hex
Big Wheel Kick Scooter.

A guide for your ride.

IMPORTANT: READ CAREFULLY AND RETAIN FOR FUTURE REFERENCE.

MODEL SKUS: JHEX-BLU | JHEX-PNK | JHEX-RED | JHEX-GRN | JHEX-ABL
JHEX-RGD | JHEX-SGR | JHEX-DRD

Jetson's top two riding rules:
Be safe. Have fun!

Contents

Safety Warnings 4

Warranty Coverage 5

Product Overview 6

Product Specs 8

Online Resources 9

Getting Started 10

- Starting Notes 10
- Unfolding & Folding the Scooter 11
- Assembling the Handlebar 16
- Adjusting the Height of the Handlebar 24

Making Moves 27

- Riding the Scooter 27
- Using the Brake 28
- Using the Kickstand 29

Helmet Safety 31

Care & Maintenance 32

Safety Warnings

- Before use, please read the user manual and safety warnings carefully, and make sure you understand and accept all the safety instructions. The user will be responsible for any loss or damage caused by improper use.
- Before each cycle of operation, the operator shall perform the preoperation checks specified by the manufacturer: That all guards and pads originally supplied by the manufacturer are in proper place and in serviceable condition; That the braking system is functioning properly; That any and all axle guards, chain guards, or other covers or guards supplied by the manufacturer are in place and in serviceable condition; That tires are in good condition, inflated properly, and have sufficient tread remaining; The area that the product is to be operated should be safe and suitable for safe operation.
- Components shall be maintained and repaired in accordance with the manufacturer's specifications and using only the manufacturer's authorized replacement parts with installation performed by dealers or other skilled persons.
- Warning against recharging non-rechargeable batteries.
- Don't allow hands, feet, hair, body parts, clothing, or similar articles to come in contact with moving parts, wheels, or drive train, while the motor is running.
- This product should not be used by children or persons with reduced physical, sensory or mental capabilities, or lack of experience and knowledge, unless they have been given supervision or instruction (IEC 60335-1/A2:2006).
- Unsupervised children should not play with the product (IEC 60335-1/A2:2006).
- Adult supervision is required.
- The rider should not exceed 220 lb.
- Units shall not be operated to perform racing, stunt riding, or other maneuvers, which may cause loss of control, or may cause uncontrolled operator/passenger actions or reactions.
- Never use near motor vehicles.
- Avoid sharp bumps, drainage grates, and sudden surface changes. Scooter may suddenly stop.
- Avoid streets and surfaces with water, sand, gravel, dirt, leaves, and other debris. Wet weather impairs traction, braking, and visibility.
- Avoid riding around flammable gas, steam, liquid, or dust that could cause fire.
- Operators shall adhere to all of the manufacturer's recommendations and instructions, as well as comply with all laws and ordinances: Units without headlights shall be operated only with adequate daylight conditions of visibility, and; Owners shall be encouraged to highlight (for conspicuity) using lighting, reflectors, and for low-riding units, signal flags on flexible poles.
- Persons with the following conditions shall be cautioned not to operate: Those with heart conditions; Pregnant women; Persons with head, back, or neck ailments, or prior surgeries to those areas of the body; and persons with any mental or physical conditions that may make them susceptible to injury or impair their physical dexterity or mental capabilities to recognize, understand, and perform all of the safety instructions and to be able to assume the hazards inherent in unit use.
- Do not ride at night.
- Do not ride after drinking or taking prescription medication.
- Do not carry items when riding.
- Never operate the product barefooted.
- Always wear shoes and keep shoelaces tied.
- Make sure your feet are always placed securely on the deck.
- Operators always shall use appropriate protective clothing, including but not limited to a helmet, with appropriate certification, and any other equipment recommended by the manufacturer: Always wear protective equipment such as helmet, knee pads, and elbow pads.
- Always give way to pedestrians.
- Be alert to things in front and far away from you.
- Do not allow distractions when riding, such as answering the phone or engaging in any other activities.
- The product cannot be ridden by more than one person.
- When you ride the product along with other riders, always keep a safe distance to avoid a collision.
- When turning, be sure to maintain your balance.
- Riding with improperly adjusted brakes is dangerous and can result in serious injury or death.
- The brake may become hot while operating, do not touch the brake with your bare skin.

- Applying brakes too hard or too suddenly can lock up a wheel, which could cause you to lose control and fall. Sudden or excessive application of the brake may result in injury or death.
- If the brake loosens, please adjust with the hexagon wrench, or please contact Jetson Customer Care.
- Replace worn or broken parts immediately.
- Check whether all safety labels are in place and understood before riding.
- The owner shall allow the use and operation of the unit after a demonstration that such operators can understand and operate all components of the unit before use.
- Do not ride without proper training. Do not ride at high speeds, on uneven terrain, or on slopes. Do not perform stunts or turn abruptly.
- Recommended for indoor use.
- Prolonged exposure to UV rays, rain and the elements may damage the enclosure materials, store indoors when not in use.

MODIFICATIONS
Do not attempt to disassemble, modify, repair, or replace the unit or any components of the unit without instruction from Jetson Customer Care. This will void any warranty, and can lead to malfunctions which may cause injury.

ADDITIONAL OPERATION CAUTIONS
Do not lift the product off the ground while it is on and the wheels are in motion. This can result in freely spinning wheels, which may cause injury to yourself or others nearby. Do not jump on or off the product, and do not jump while using it. Always keep your feet firmly planted on the foot rest while in operation. Always check the battery charge before using.

California Proposition 65

⚠WARNING:

This product can expose you to chemicals including Chromium (hexavalent compounds), which is known to the State of California to cause cancer and birth defects or other reproductive harm. For more information go to: www.P65Warnings.ca.gov.

Warranty Coverage

ONE-YEAR GENERAL LIMITED WARRANTY
All new Jetson products, excluding parts and accessories, are warranted against defects in materials and workmanship for a period of one year from the date of original retail purchase when used in accordance with Jetson's user manuals (refer to ridejetson.com/support). **Under this warranty, you will be able to direct your claims to Jetson even in situations where you purchased the Jetson Product from one of our authorized retailers.** To read the full terms of our warranty, visit www.ridejetson.com/pages/warranty-policy.

Product Overview

1. HANDLEBAR*
2. STEM CLAMP (SOME VERSIONS)
3. FRONT WHEEL
4. FOLDING LEVER
5. KNOB
6. LOCKING CLAMP
7. KICKSTAND
8. DECK
9. REAR FOOT BRAKE
10. REAR WHEEL

* NOT PRE-ATTACHED; REQUIRES SET-UP

TOOL INCLUDED (DEPENDENT ON MODEL):



4MM ALLEN KEY

OR



2-BIT PHILLIPS-HEAD
SCREWDRIVER (A) AND
4MM ALLEN KEY (B) TOOL



NOTE: IMAGES MAY NOT REFLECT EXACT APPEARANCE OF ACTUAL PRODUCT.

Product Specs

- WEIGHT LIMIT: 220 LB
- PRODUCT WEIGHT: 9.2 LB
- WHEEL SIZE: 8”
- FOLDED DIMS (LxWxH): 31.7” × 15.6” × 12.4”
- UNFOLDED DIMS (LxWxH): 35.6” × 15.6” × 35.6”
- DECK DIMS (LxW): 23.2” × 6”
- STEM HEIGHT: 35.6”– 39.2”
- RECOMMENDED AGE: 8+

Online Resources



Scan for our most updated Hex onboarding materials and support resources.

1. Getting Started

1.1 Starting Notes

- REMOVE ALL PROTECTIVE PACKAGING PIECES PRIOR TO BEGINNING ASSEMBLY, INCLUDING THAT AT THE TOP OF THE STEM.
- THE DIRECTIONS GIVEN IN THIS MANUAL—RIGHT, LEFT, FRONT/FORWARD, AND REAR/BACK—ARE ORIENTED AS THE RIDER WOULD SEE THEM WHEN STANDING ON THE SCOOTER. THE "RIGHT SIDE" OF THE SCOOTER, FOR EXAMPLE, IS THE SIDE WHERE THE RIDER'S RIGHT HAND WILL BE.

⚠WARNING:

FAILURE TO COMPLY WITH THE FOLLOWING INSTRUCTIONS MAY RESULT IN INJURY TO THE CHILD OR OTHERS.
- KEEP SMALL PARTS AWAY FROM CHILDREN DURING ASSEMBLY.
- ACCESSORY MUST BE ASSEMBLED AND REMOVED BY AN ADULT.
- FREQUENTLY INSPECT THE PRODUCT FOR DAMAGE.

*ADULTS MUST ASSIST CHILDREN IN THE ASSEMBLY AND INITIAL ADJUSTMENT PROCEDURES OF THE PRODUCT.

1.2 Unfolding & Folding the Scooter

WHEN TO UNFOLD: FOR ASSEMBLY AND RIDING
WHEN TO FOLD: FOR STORAGE AND TRANSPORT



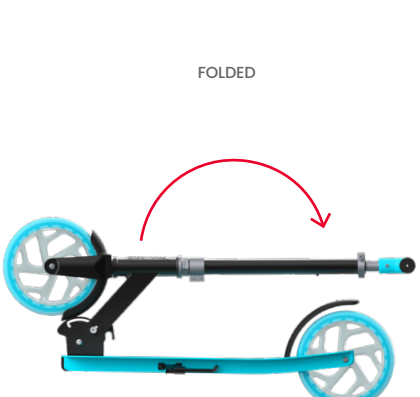

1. HOLDING THE LOCKING LATCH STEADY WITH ONE HAND, USE THE OTHER HAND TO LOOSEN THE KNOB BY TURNING IT COUNTERCLOCKWISE FOR 2 - 3 ROTATIONS.

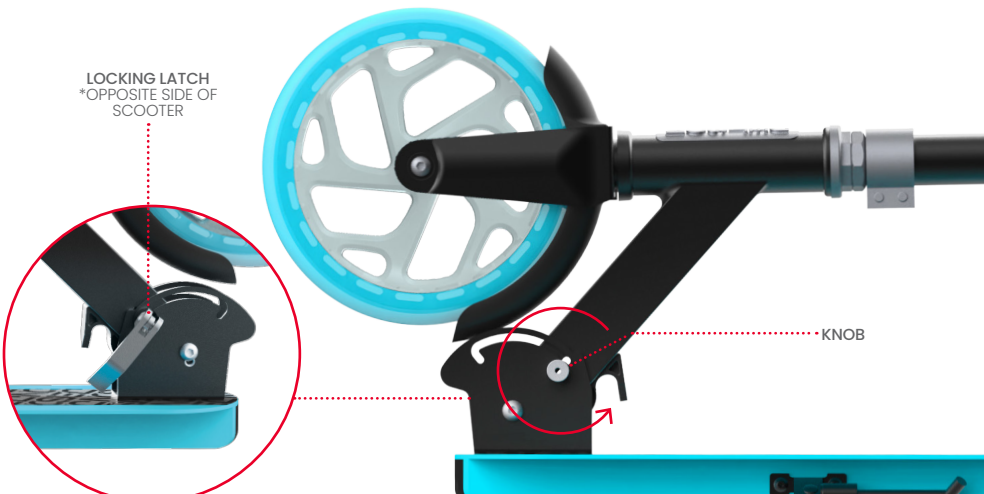

2. PULL OPEN THE LOCKING LATCH.

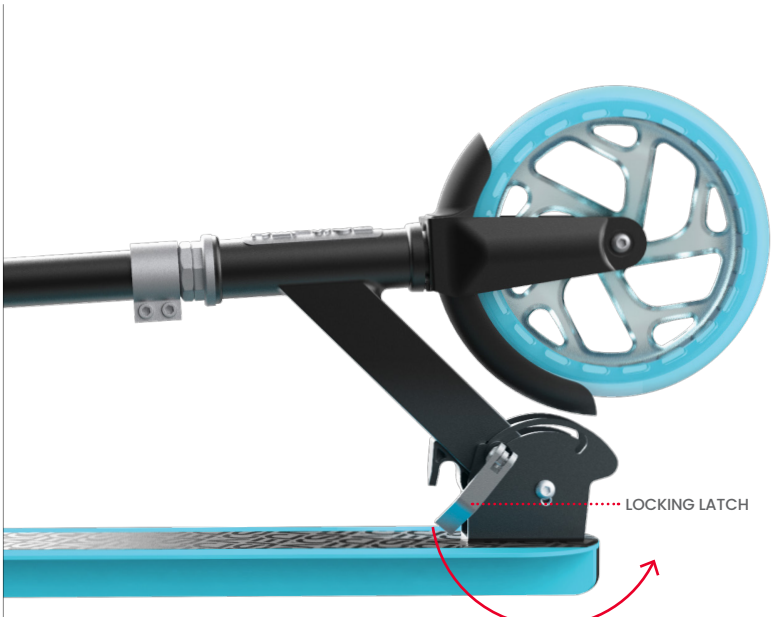

3. PULL THE FOLDING LEVER UP TOWARDS THE TOP OF THE STEM. HOLD IT THERE WHILE YOU RAISE THE STEM UPRIGHT (TO UNFOLD THE SCOOTER) OR LOWER THE STEM TOWARDS THE DECK (TO FOLD THE SCOOTER.)
4. **ENSURE THAT THE STEM "CLICKS" INTO PLACE IN THE FOLDED OR UNFOLDED POSITION.**
   NOTE: PRIOR TO ASSEMBLY (SECTION 1.3), HANDLEBAR WILL NOT YET BE ATTACHED.

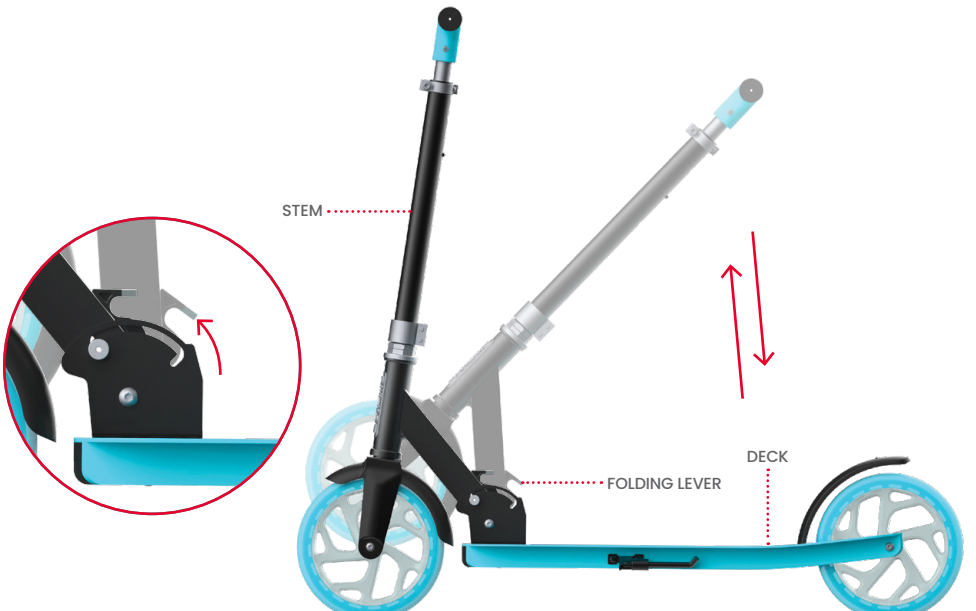

5. RELEASE THE FOLDING LEVER DOWN.
6. HOLD THE LOCKING LATCH STEADY WITH ONE HAND WHILE YOU TIGHTEN THE KNOB BY TURNING IT CLOCKWISE.
7. PUSH THE LOCKING LATCH CLOSED.
8. CHECK THAT THE STEM IS SECURE.

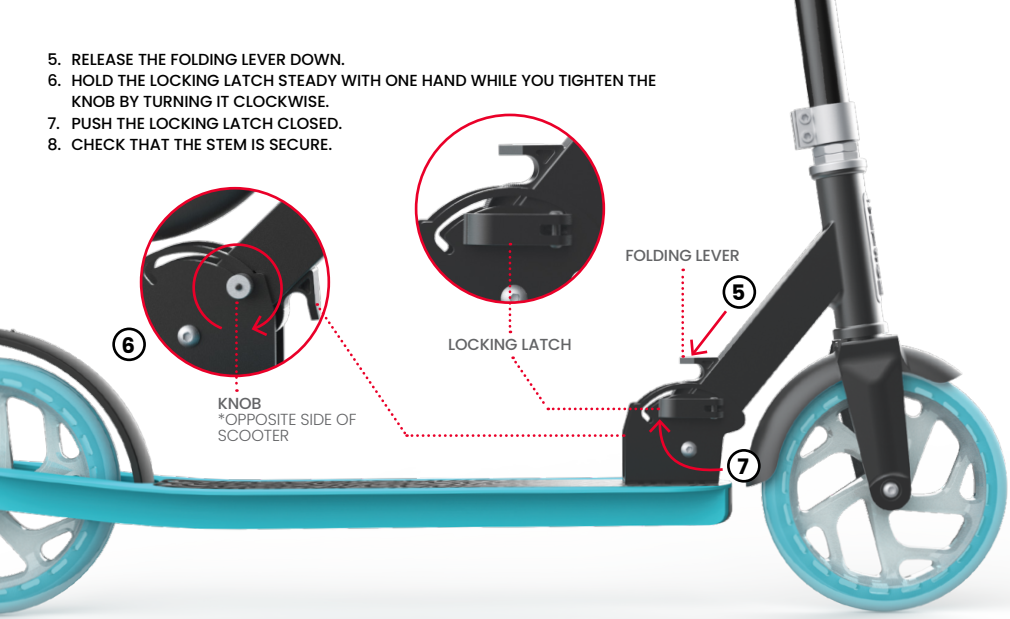

TROUBLESHOOTING: IF YOU CANNOT OPEN OR CLOSE THE LOCKING LATCH, THE KNOB MAY BE TOO TIGHT. LOOSEN THE KNOB BY TURNING IT COUNTERCLOCKWISE FOR ½ ROTATION AT A TIME UNTIL YOU CAN UTILIZE THE LATCH.

IMPORTANT: NEVER RIDE WITHOUT THE STEM CLICKED INTO THE UPRIGHT POSITION AND THE LOCKING LATCH CLOSED AND TIGHT.

1.3 Assembling the Handlebar

DEPENDENT ON THE DATE OF PRODUCTION OF YOUR HEX, YOUR HANDLEBAR WILL NEED TO BE ASSEMBLED ONE OF TWO WAYS. MATCH YOUR HANDLEBAR TO THE ONE BELOW, THEN FOLLOW THE CORRESPONDING INSTRUCTIONS.

UNFOLD THE SCOOTER SO THAT THE STEM IS UPRIGHT (SEE SECTION 1.2) AND PROP THE SCOOTER ONTO ITS KICKSTAND (SEE SECTION 2.3) PRIOR TO BEGINNING ASSEMBLY.

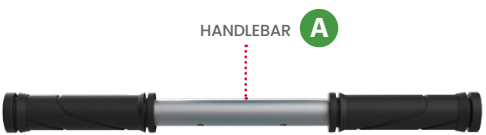

A

FOLLOW ASSEMBLY INSTRUCTIONS BEGINNING ON PAGE 17.

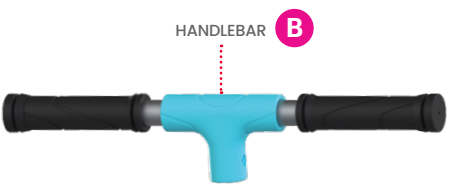

B

FOLLOW ASSEMBLY INSTRUCTIONS BEGINNING ON PAGE 20.

HANDLEBAR ASSEMBLY A

A1. REMOVE THE BOLTS FROM THE TOP OF THE HANDLEBAR CLAMP BY TURNING THEM COUNTERCLOCKWISE WITH THE 4MM ALLEN KEY.

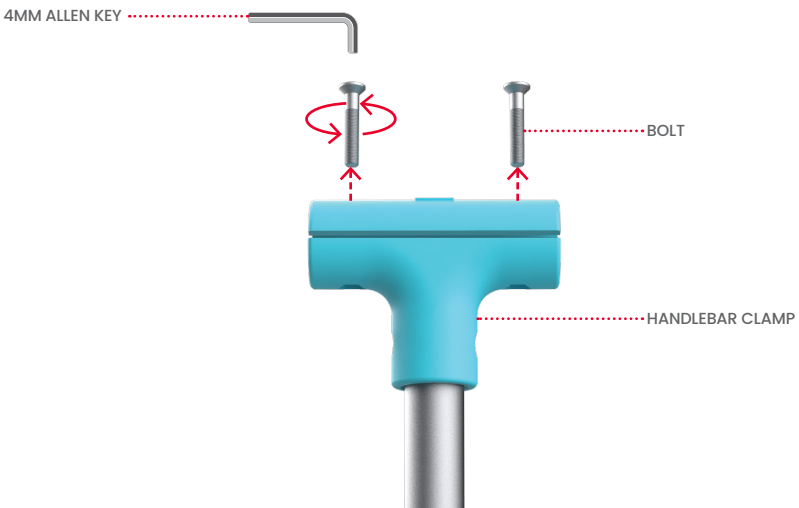

A

A2. POSITION THE HANDLEBAR ON THE CLAMP BASE. ALIGN THE HOLES IN THE TOP OF THE HANDLEBAR CLAMP AND THE HANDLEBAR WITH THE PRE-DRILLED HOLES IN THE BOTTOM OF THE HANDLEBAR CLAMP.

A3. INSERT THE BOLTS THROUGH THE TOP OF THE HANDLEBAR CLAMP, HANDLEBAR, AND THE BOTTOM OF THE HANDLEBAR CLAMP BY TURNING EACH ONE CLOCKWISE WITH THE ALLEN KEY.

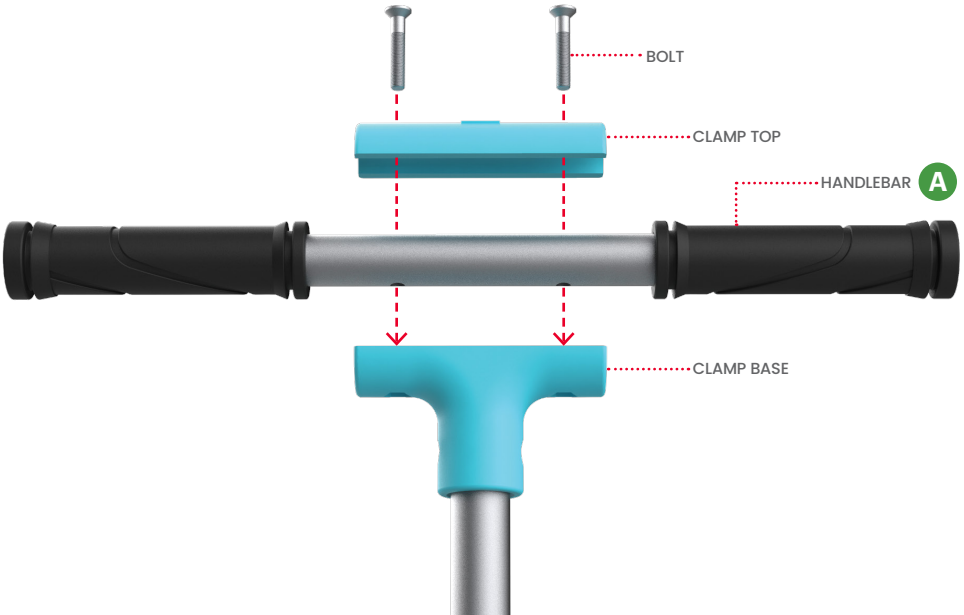

A

A4. FULLY TIGHTEN THE BOLTS WITH THE ALLEN KEY. CHECK THAT THE HANDLEBAR IS SECURE.



HANDLEBAR ASSEMBLY B

B1. UNSCREW THE PRE-ATTACHED BOLT FROM THE NUT IN THE STEM BY TURNING IT CLOCKWISE WITH THE SCREWDRIVER TIP OF THE 2-BIT TOOL. (YOU MAY HAVE TO HOLD THE NUT STEADY WITH A FINGER IN ORDER TO LOOSEN AND REMOVE THE BOLT.) SET THE HARDWARE ASIDE.

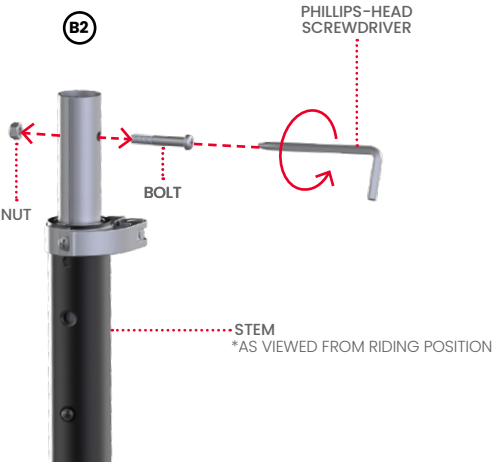

B

B2. POSITION THE HANDLEBAR BASE OVER THE TOP OF THE STEM SUCH THAT THE RAISED LINE ON THE INSIDE OF THE HANDLEBAR BASE IS IN LINE WITH THE INDENTED CHANNEL ON THE TOP OF THE SCOOTER STEM.

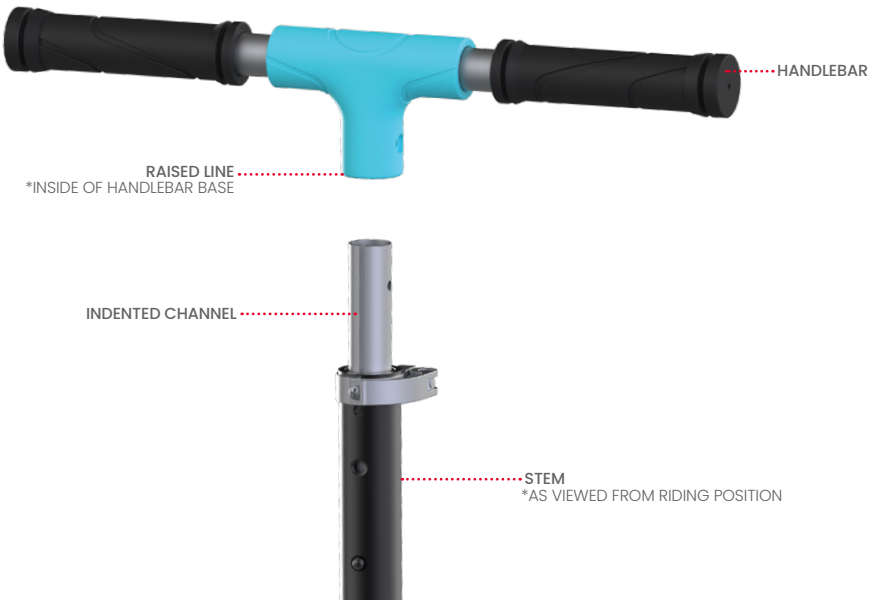

B

B3. SLIDE THE HANDLEBAR ONTO THE SCOOTER STEM.

B4. PUSH DOWN AND ADJUST UNTIL THE HOLES IN THE SIDES OF THE HANDLEBAR BASE ARE ALIGNED WITH THE HOLES ON THE SIDES OF THE STEM.



B

B5. INSERT THE BOLT THROUGH THE ALIGNED HOLES ON THE RIGHT-HAND SIDE OF THE HANDLEBAR UNTIL THE END OF IT IS VISIBLE THROUGH THE LEFT-SIDE HOLES.

IMPORTANT: PLACE THE BOLT ON THE RIGHT SIDE WHEN FACING THE HANDLEBAR FROM THE RIDING POSITION.

B6. PLACE AND HOLD THE NUT AT THE END OF THE BOLT, ENSURING THAT IT IS NESTLED IN THE HANDLEBAR HOLE.

B7. TIGHTEN THE BOLT INTO THE NUT BY TURNING IT CLOCKWISE WITH THE SCREWDRIVER TIP OF THE 2-BIT TOOL.

B8. CHECK THAT THE HANDLEBAR IS SECURE.

IMPORTANT: PRIOR TO EVERY RIDE, CHECK THAT THE BOLT AND NUT ARE TIGHTENED AND SECURE.

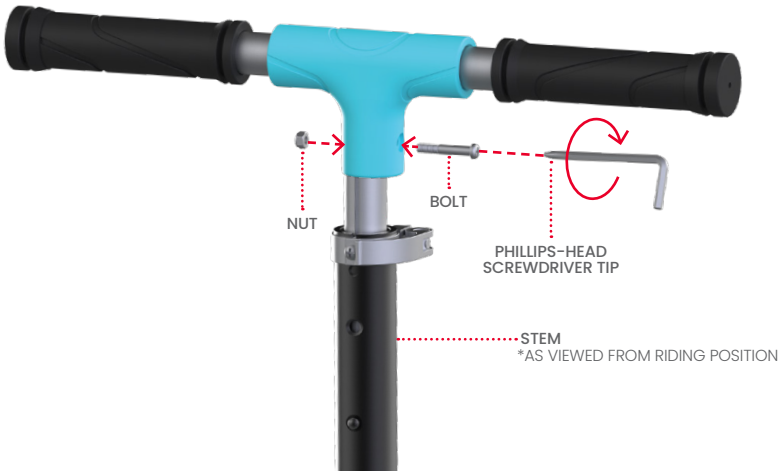

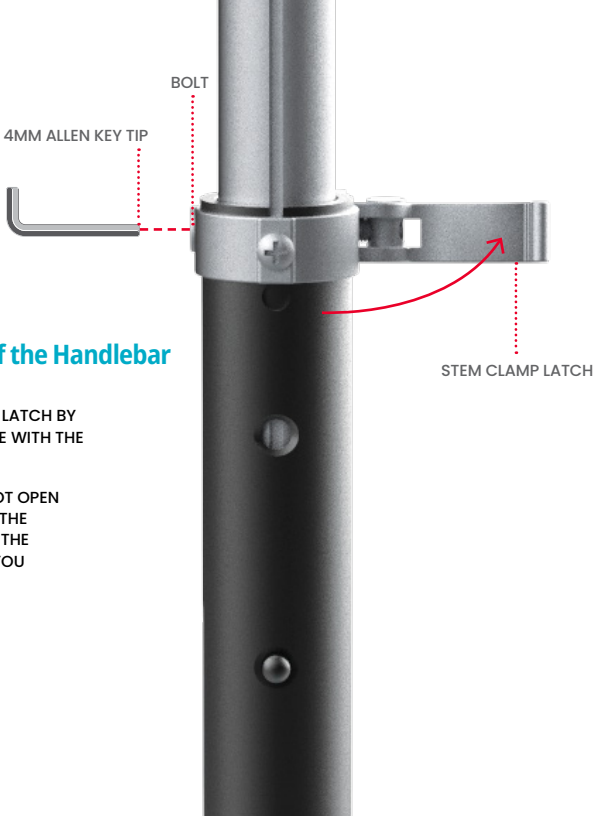

1.3 Adjusting the Height of the Handlebar

1. OPEN THE STEM CLAMP LATCH.
2. LOOSEN THE BOLT OPPOSITE THE LATCH BY TURNING IT COUNTERCLOCKWISE WITH THE 4MM ALLEN KEY.

TROUBLESHOOTING: IF YOU CANNOT OPEN OR CLOSE THE LATCH, THE BOLT ON THE CLAMP MAY BE TOO TIGHT. LOOSEN THE BOLT ½ ROTATION AT A TIME UNTIL YOU CAN UTILIZE THE LATCH.

3. WHILE PRESSING IN THE STEM PIN, LIFT OR LOWER THE HANDLEBAR UNTIL THE PINK CLICKS INTO ANOTHER STEM PIN HOLE.



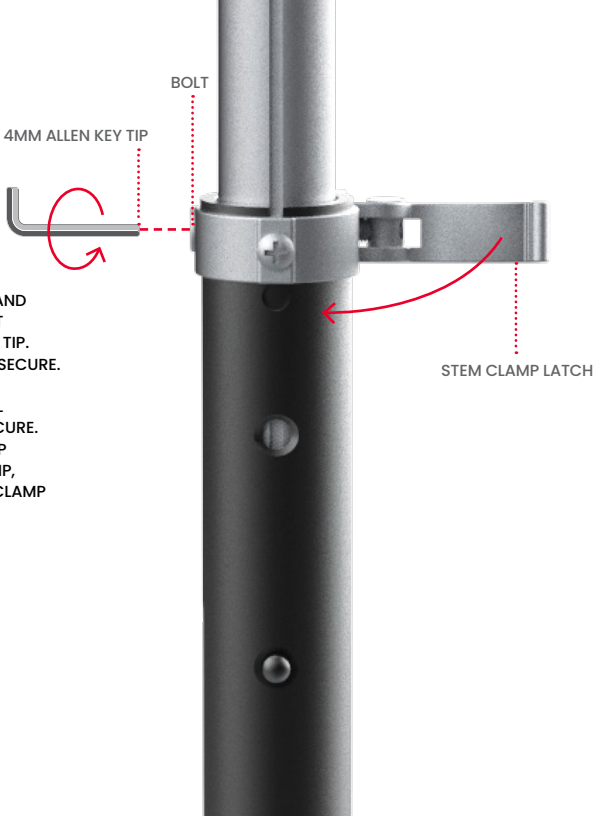

4. CLOSE THE STEM CLAMP LATCH AND TIGHTEN THE BOLT BY TURNING IT CLOCKWISE WITH THE ALLEN KEY TIP.
5. CHECK THAT THE HANDLEBAR IS SECURE.

CAUTION: THE STEM PIN ALONE WILL NOT KEEP THE HANDLEBAR STEM SECURE. ALWAYS RIDE WITH THE STEM CLAMP CLOSED. TO TIGHTEN A LOOSE CLAMP, TURN THE CLAMP KNOB WHILE THE CLAMP IS IN THE CLOSED POSITION.

2. Making Moves

2.1 Riding the Scooter

1. PACE ONE FOOT ON THE FRONT OF THE DECK FACING FORWARD.
2. USE THE BACK FOOT TO PUSH OFF THE GROUND AND PROPEL THE SCOOTER FORWARD.

TO TURN: ROTATE THE HANDLEBAR TO THE LEFT OR RIGHT.

TO COAST: PLACE THE KICKING FOOT ON THE DECK BEHIND THE FRONT FOOT, TURNED OUTWARD AT A SLIGHT ANGLE FOR BETTER STABILITY.



2.2 Using the Brake

PRESS DOWN GENTLY WITH THE REAR RIDING FOOT TO SLOW DOWN. APPLY MORE PRESSURE TO COME TO A COMPLETE STOP.

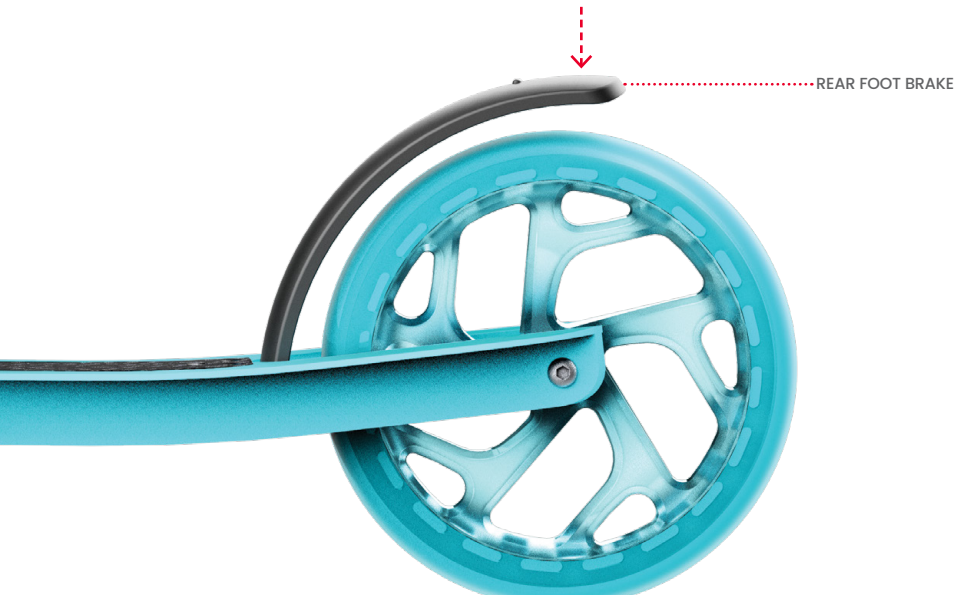

2.3 Using the Kickstand

TO LOWER THE KICKSTAND: PIVOT IT DOWN FROM THE SIDE OF THE SCOOTER DECK. TILT THE SCOOTER TO REST IT ON THE KICKSTAND.
TO RAISE THE KICKSTAND: PIVOT THE KICKSTAND UPWARDS TOWARDS THE REAR WHEEL OF THE SCOOTER DECK.

IMPORTANT: ALWAYS RAISE THE KICKSTAND BEFORE RIDING.

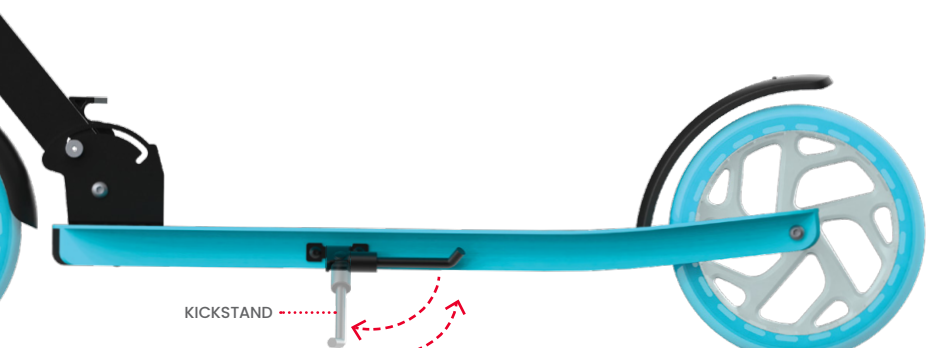

Helmet Safety

A HELMET SHOULD BE WORN BY THE RIDER AT ALL TIMES.



PROPER POSITIONING:
THE FOREHEAD IS COVERED
BY THE HELMET.



IMPROPER POSITIONING:
THE FOREHEAD IS EXPOSED.
A FALL COULD RESULT IN SERIOUS INJURY.

* WEAR A HELMET, APPROPRIATE CLOTHING, SHOES, AND SAFETY GEAR. AVOID CLOTHING THAT CAN GET CAUGHT INTO OR UNDER THE WHEELS. CLOSED-TOE, FLAT SHOES ARE RECOMMENDED. WEAR AN ASTM F1492 APPROVED HELMET AND PROTECTIVE GEAR TO PREVENT INJURY IN THE EVENT OF AN ACCIDENT.

Care & Maintenance

CLEANING THE SCOOTER

• TO CLEAN THE SCOOTER, CAREFULLY WIPE WITH A DAMP CLOTH AND THEN DRY WITH A DRY CLOTH.
• DO NOT APPLY WATER DIRECTLY TO THE SCOOTER. WATER CAN CAUSE DAMAGE TO THE SCOOTER AND LEAD TO A MALFUNCTION THAT PUTS RIDER SAFETY AT RISK.

PRECAUTIONS

• KEEP AWAY FROM FIRE AND EXCESSIVE HEAT.
• AVOID INTENSE PHYSICAL IMPACT AND/OR SEVERE VIBRATION.
• RIDE THE SCOOTER ON A SMOOTH, FLAT SURFACE.
• PROTECT FROM WATER OR MOISTURE.
• CONTACT THE JETSON CARE TEAM IF THERE ARE ANY ISSUES WITH THE SCOOTER.

STORING THE SCOOTER

• STORE THE SCOOTER INDOORS AND IN A DRY PLACE.
• COVER THE SCOOTER TO PROTECT IT AGAINST DUST.
• REMOVE BATTERIES PRIOR TO STORING THE SCOOTER FOR EXTENDED PERIODS OF TIME.

Stay connected.

Be sure to follow **@ridejetson**
on social media to learn about fantastic offers,
giveaways, and all the latest Jetson news.



Loving your ride?

Then be sure to leave a review at ridejetson.com/reviews.
We can't wait to hear from you!

JETSON

#MakeMoves

Questions? Let us help.

ridejetson.com/support
ridejetson.com/chat

To exercise your product's warranty or inquire about warranty coverage, contact us directly.

1-888-976-9904

Manufactured in Yongkang, China
Imported by Jetson Electric Bikes LLC.
P.O. Box 320149, 775 4th Ave #2,
Brooklyn, NY 11232

www.ridejetson.com

Made in China
Date Code: 05/2024
Document Edition: v2.1

© 2024, JETSON. ALL RIGHTS RESERVED. Manufactured by JETSON ELECTRIC BIKES LLC.
No portion of this document, including shape, copy, graphics, and design, may be reproduced or transmitted in any form or by any means.