A GUIDE FOR YOUR RIDE.

IMPORTANT:
Read carefully and retain for future reference.

JETSON

FIZZ

Bubble Ride-On.

MODEL SKU(S): JFIZZ-BLU | JFIZZ-PNK

OUR TOP TWO RIDING RULES:

BE SAFE.
HAVE FUN!

MANUFACTURED IN PINGHU, CHINA
IMPORTED BY TRURIDE TECH LLC.
PO BOX 461, JERSEY CITY, NJ 07302-9998

DATE CODE: 07/2026
DOCUMENT EDITION: V1.0
MADE IN CHINA

© 2026, TRURIDE TECH. ALL RIGHTS RESERVED. MANUFACTURED FOR TRURIDE TECH LLC.
JETSON® IS A REGISTERED TRADEMARK USED UNDER LICENSE FROM JETSTREAM BRANDS LLC.
NO PORTION OF THIS DOCUMENT, INCLUDING SHAPE, GRAPHICS, AND DESIGN, MAY BE
REPRODUCED OR TRANSMITTED IN ANY FORM OR BY ANY MEANS.

Contents

Safety Warnings 3
Warranty Coverage & Product Registration 5
Arbitration Agreement 6
1. About Your Product
1.1 Product Specs 8
1.2 Product Overview 8
1.3 What's in the Box 10
1.4 Online Resources 11
2. Installation Instructions
2.1 Starting Notes 12
2.2 Helmet Safety 12
2.3 Attaching the Rear Wheels 13
2.4 Assembling & Attaching the Front Unit 15
2.5 Attaching the Fender 18
2.6 Attaching the Front Wheel 19
2.7 Connecting & Attaching the Bubble Machine 21
2.8 Filling & Attaching the Bubble Solution Container 22
2.9 Inserting Batteries 23
3. Features & Functions
3.1 Using the Bubbles 24
4. Operating Instructions
4.1 Pre-Ride Safety Checks 25
4.2 Riding 25
User Maintenance Instructions 26
Connect with Us 26

SAFETY WARNINGS.

KEEP THESE INSTRUCTIONS.

INSTRUCTIONS ON THE RISK OF FIRE OR INJURY TO PERSONS AND IMPORTANT SAFETY INSTRUCTIONS

- Before use, please read the user manual and safety warnings carefully, and make sure you understand and accept all the safety instructions. The user will be responsible for any loss or damage caused by improper use.
- Before each cycle of operation, the operator shall perform the preoperation checks specified by the manufacturer: That all guards and pads originally supplied by the manufacturer are in proper place and in serviceable condition; That the braking system is functioning properly; That any and all axle guards, chain guards, or other covers or guards supplied by the manufacturer are in place and in serviceable condition; That tires are in good condition, inflated properly, and have sufficient tread remaining; The area that the product is to be operated should be safe and suitable for safe operation.
- Components shall be maintained and repaired in accordance with the manufacturer's specifications and using only the manufacturer's authorized replacement parts with installation performed by dealers or other skilled persons.
- Do not mix old and new batteries.
- Do not mix alkaline, standard (carbon-zing) or rechargeable batteries.
- This product should not be used by children or persons with reduced physical, sensory or mental capabilities, or lack of experience and knowledge, unless they have been given supervision or instruction (IEC 60335-1/A2:2006).
- Unsupervised children should not play with the product (IEC 60335-1/A2:2006).
- Adult supervision is required.
- Units shall not be operated to perform racing, stunt riding, or other maneuvers, which may cause loss of control, or may cause uncontrolled operator/passenger actions or reactions.
- Never use near motor vehicles.
- Avoid sharp bumps, drainage grates, and sudden surface changes. Scooter may suddenly stop.
- Avoid streets and surfaces with water, sand, gravel, dirt, leaves, and other debris. Wet weather impairs traction, braking, and visibility.
- Avoid riding around flammable gas, steam, liquid, or dust that could cause fire.
- Operators shall adhere to all of the manufacturer's recommendations and instructions, as well as comply with all laws and ordinances: Units without headlights shall be operated only with adequate daylight conditions of visibility, and; Owners shall be encouraged to highlight (for conspicuity) using lighting, reflectors, and for low-riding units, signal flags on flexible poles.
- Persons with the following conditions shall be cautioned not to operate: Those with heart conditions; Pregnant women; Persons with head, back, or neck ailments, or prior surgeries to those areas of the body; and persons with any mental or physical conditions that may make them susceptible to injury or impair their physical dexterity or mental capabilities to recognize, understand, and perform all of the safety instructions and to be able to assume the hazards inherent in unit use.
- Do not ride at night.
- Do not ride after drinking or taking prescription medication.
- Do not carry items when riding.
- Never operate the product barefooted.
- Always wear shoes and keep shoelaces tied.
- Make sure your feet are always placed securely on the deck.
- Always give way to pedestrians.

- Be alert to things in front and far away from you.
- Operators always shall use appropriate protective clothing, including but not limited to a helmet, with appropriate certification, and any other equipment recommended by the manufacturer: Always wear protective equipment such as helmet, knee pads, and elbow pads.
- Do not allow distractions when riding, such as answering the phone or engaging in any other activities.
- The product cannot be ridden by more than one person.
- When you ride the product along with other riders, always keep a safe distance to avoid a collision.
- When turning, be sure to maintain your balance.
- Riding with improperly adjusted brakes is dangerous and can result in serious injury or death.
- The brake may become hot while operating, do not touch the brake with your bare skin.
- Applying brakes too hard or too suddenly can lock up a wheel, which could cause you to lose control and fall. Sudden or excessive application of the brake may result in injury or death.
- If the brake loosens, please adjust with a hexagon wrench, screwdriver, or other applicable tool, or please contact the Jetson Care Team.
- Replace worn or broken parts immediately.
- Check whether all safety labels are in place and understood before riding.
- The owner shall allow the use and operation of the unit after a demonstration that such operators can understand and operate all components of the unit before use.
- Do not ride without proper training. Do not ride at high speeds, on uneven terrain, or on slopes. Do not perform stunts or turn abruptly.
- Recommended for indoor use.
- Only use the battery(ies) specified by the manufacturer
- Prolonged exposure to UV rays, rain and the elements may damage the enclosure materials, store indoors when not in use.
- The rider should not exceed 66 lb (29.9 kg).

DISPOSAL OF USED BATTERY



Battery may contain hazardous substances which could endanger the environment and human health. This symbol marked on the battery and/or packaging indicates that used battery shall not be treated as municipal waste. Batteries should be disposed of at an appropriate collection point for recycling. By ensuring the used batteries are disposed of correctly, you will help preventing potential negative consequences for the environment and human health. The recycling of materials will help to conserve natural resources. For more information about recycling of used batteries, please contact your local municipality waste disposal service.

- Do not mix old and new batteries.
- Do not mix alkaline, standard (carbon-zinc) or rechargeable batteries.

MODIFICATIONS

Do not attempt to disassemble, modify, repair, or replace the unit or any components of the unit without instruction from the Jetson Care Team. This will void any warranty, and can lead to malfunctions which may cause injury.

ADDITIONAL OPERATION PRECAUTIONS

Do not lift the product off the ground while it is on and the wheels are in motion. This can result in freely spinning wheels, which may cause injury to yourself or others nearby. Do not jump on or off the product, and do not jump while using it. Always keep your feet firmly planted on the foot rest while in operation. Always check the battery charge before using. Adults must assist children in the initial adjustment procedures to unfold scooter, adjust handlebar and steering to height and finally to fold scooter.

⚠ WARNING:

Failure to comply with the following instructions may result in injury to the child or others.

- Keep small parts away from children during assembly.
- Accessory must be assembled and removed by an adult.
- Frequently inspect the product for damage.

*** ADULT ASSEMBLY IS REQUIRED.**

⚠ WARNING:

To reducte the risk of injury, adult supervision is required. Never use in roadways, near motor vehicles, on or near steep inclines or steps, swimming pools or other bodies of water; always wear shoes, and never allow more than 1 rider.

CALIFORNIA PROPOSITION 65

⚠ WARNING:

THIS PRODUCT CAN EXPOSE YOU TO CHEMICALS INCLUDING CHROMIUM (HEXAVALENT COMPOUNDS), WHICH IS KNOWN TO THE STATE OF CALIFORNIA TO CAUSE CANCER AND BIRTH DEFECTS OR OTHER REPRODUCTIVE HARM. FOR MORE INFORMATION GO TO: WWW.P65WARNINGS.CA.GOV.

WARRANTY COVERAGE & PRODUCT REGISTRATION.

To exercise your product's warranty or inquire about warranty coverage, contact us directly.

www.ridejetson.com

GENERAL LIMITED WARRANTY

YOUR NEW JETSON PRODUCT IS WARRANTED AGAINST DEFECTS IN MATERIALS AND WORKMANSHIP AS INDICATED ON RIDEJETSON.COM/WARRANTY FOR A PERIOD OF TIME FROM THE DATE OF ORIGINAL RETAIL PURCHASE WHEN USED IN ACCORDANCE WITH JETSON'S USER MANUALS (REFER TO RIDEJETSON.COM/SUPPORT). **UNDER THIS WARRANTY, YOU WILL BE ABLE TO DIRECT YOUR CLAIMS TO JETSON EVEN IN SITUATIONS WHERE YOU PURCHASED THE JETSON PRODUCT FROM ONE OF OUR AUTHORIZED RETAILERS.** TO READ THE FULL TERMS OF OUR WARRANTY, VISIT RIDEJETSON.COM/WARRANTY.

PRODUCT REGISTRATION

REGISTER YOUR NEW JETSON TO FAST-TRACK YOU TOWARDS PERSONALIZED PRODUCT AND WARRANTY SUPPORT. MAKE YOUR MOVE AT RIDEJETSON.COM/PAGES/REGISTRATION.

ARBITRATION AGREEMENT.

IMPORTANT NOTICE ABOUT YOUR RIGHTS - PLEASE READ.

THIS ARBITRATION AGREEMENT ("AGREEMENT") SHALL GOVERN THE MANNER BY WHICH ANY CLAIMS AGAINST US REGARDING THIS PURCHASE AND/OR USE OF OUR PRODUCTS SHALL BE RESOLVED. THIS AGREEMENT SETS FORTH IMPORTANT LEGAL RIGHTS. PLEASE READ THIS AGREEMENT CAREFULLY.

BY PURCHASING OUR PRODUCTS FROM US OR ANY THIRD PARTY, YOU UNDERSTAND AND AGREE THAT ANY DISPUTE BETWEEN YOU AND US CONCERNING SUCH PRODUCT SHALL BE SETTLED BY BINDING INDIVIDUAL ARBITRATION IN ACCORDANCE WITH THE TERMS OF THIS AGREEMENT AND AS SUCH YOU WAIVE YOUR RIGHT TO PARTICIPATE IN OR REPRESENT A CLASS OF CONSUMERS IN SUCH DISPUTES. IF YOU DO NOT AGREE WITH THESE TERMS, YOU MUST RETURN THE PRODUCT WITHIN (30) DAYS OF YOUR RECEIPT OF THIS PRODUCT.

GOVERNING LAW; ASSENT

This Agreement shall be governed by the Federal Arbitration Act, 9 U.S.C. §§ 1 et seq., and, to the extent state law is applicable, the laws of the State of Delaware, without regard to conflict of laws principles. By retaining the Product beyond thirty (30) days from the date of receipt, you acknowledge that you have read, understood, and agreed to be bound by this Agreement. If you do not agree to this Agreement, you must return the Product within thirty (30) days of receipt for a full refund of the purchase price.

I. RESOLUTION BY BINDING ARBITRATION.

Any Claim or dispute between you and us, or any of our subsidiaries or affiliates, agents or representatives arising out of or relating in any way to the Product or this Agreement shall be resolved through final, binding arbitration. This arbitration obligation applies regardless of whether the claim or dispute involves a tort, fraud, misrepresentation, product liability, negligence, violation of a statute, or any other legal theory. You specifically acknowledge and agree that you waive your right to bring a lawsuit based on such claims or disputes and to have such lawsuit resolved by a judge or jury. Notwithstanding the foregoing, either party may seek emergency injunctive or other equitable relief from a court of competent jurisdiction solely to prevent irreparable harm pending arbitration, without waiving any right to arbitration of the underlying dispute.

II. WAIVER OF CLASS PARTICIPATION.

All arbitrations under this Agreement shall be conducted on an individual (and not a class-wide) basis, and an arbitrator shall have no authority to award class-wide relief. You acknowledge and agree that this Agreement specifically prohibits you from commencing arbitration proceedings as a representative of others or joining in any arbitration proceedings brought by any other person. You also acknowledge and agree that you are giving up your right to serve as a representative, as a private attorney general, or in any other representative capacity, and/or to participate as a member of a class of claimants in any lawsuit filed against us and/or related third parties.

III. ARBITRATION PROCEDURES.

(A) Before commencing any arbitration proceedings under this Agreement, you must first present the claim or dispute to us by calling our Representative toll free at 1-866-225-9723 and providing all requested information. You may be required to provide us with a written statement setting forth the nature of your claim or dispute. We shall have forty-five (45) days from the receipt of such call (or written statement) to

resolve such claim or dispute ("Resolution Period"). If your claim or dispute is not resolved within the Resolution Period, you may commence arbitration proceedings in accordance with the terms of this Agreement.

(B) The arbitration of any claim or dispute under this Agreement shall be conducted pursuant to the AAA Consumer Arbitration Rules then in effect ("AAA"). These rules and procedures are available by calling the AAA or by visiting its web site at www.adr.org.

(C) The arbitrator shall not conduct class arbitration; that is, the arbitrator shall not allow you to serve as a representative, as a private attorney general, or in any representative capacity for others in the arbitration.

(D) The arbitration of any claim or dispute under this Agreement shall be conducted in New York County, New York State; provided, however, that for claims of $25,000 or less, you may elect to conduct the arbitration by telephone or videoconference, in which case no in-person appearance shall be required.

(E) MASS ARBITRATION. If twenty (20) or more similar claims are filed against us within any ninety (90) day period ("Mass Filing"), the AAA shall administer the Mass Filing in a coordinated proceeding. The AAA shall select up to ten (10) claims to serve as bellwether proceedings, which shall be resolved first. The results of the bellwether proceedings shall not be binding on remaining claimants but may be used by the parties to facilitate resolution. No additional claims in the Mass Filing shall be administered or arbitrated while the bellwether proceedings are pending. All applicable statutes of limitations shall be tolled during any period of abeyance under this section. This provision shall not limit your individual right to arbitration.

(F) ALTERNATE ADMINISTRATOR. If the AAA is unable or unwilling to administer a claim under this Agreement, JAMS, Inc. ("JAMS") shall serve as the arbitration administrator pursuant to its Consumer Arbitration Minimum Standards then in effect, available at www.jamsadr.com.

IV. COSTS.

All administrative expenses of the arbitration proceedings commenced under this Agreement shall be as follows:

(A) If the claim or dispute that is the subject of the arbitration proceedings is less than five thousand dollars (US $5,000), your financial responsibility for the administrative costs shall not exceed One Hundred Dollars ($100);

(B) If the claim or dispute that is the subject of the arbitration proceedings is between five thousand dollars (US $5,000) and fifty thousand dollars (US $50,000), your financial responsibility for administrative costs shall not exceed Three Hundred Dollars ($300); and

(C) If the claim or dispute that is the subject of the arbitration proceedings exceeds $50,000, your financial responsibility for administrative costs shall be in accordance with the Commercial Fee Schedule provided by the AAA.

(D) Each party shall pay the fees and costs of its own counsel, experts and witnesses.

V. SMALL CLAIMS.

If a claim is within the jurisdiction of a small claims court, either party may choose to take the claim to that court instead of arbitration. Any dispute that cannot be adjudicated within the jurisdiction of a small claims tribunal shall be resolved by binding arbitration as described in and in accordance with the terms of this Agreement. Any appeal of a judgement from a small claims tribunal shall be resolved by binding arbitration under the terms of this Agreement.

VI. SEVERABILITY.

If any provision of this Agreement is declared or found to be unlawful, unenforceable or void, such provision will be ineffective only to the extent that it is found unlawful, unenforceable or void, and the remainder of the provision and all other provisions shall remain fully enforceable.

TruRide Tech LLC
794 School House Road
New Castle, DE 19720

Implemented: January 2026

1. ABOUT YOUR PRODUCT.

1.1 Product Specs

- WHEEL SIZE: 8"
- PRODUCT DIMENSIONS: 31.5" (L) × 13.6" (W) × 16.5" (H)
- WEIGHT LIMIT: 66 LB
- PRODUCT WEIGHT: 8.15 LB
- RECOMMENDED AGE: 18 MONTHS - 3 YEARS
- BATTERIES REQUIRED: 2AA *(NOT INCLUDED)*

1.2 Product Overview

1. HANDLEBAR WITH HANDGRIPS
2. DECORATIVE HEADLIGHT (NON-FUNCTIONAL)
3. FRONT FENDER
4. FRONT WHEEL
5. BUBBLES & BUBBLE SOUNDS BUTTON
6. SEAT
7. BATTERY COMPARTMENT (NOT SHOWN; UNDER SEAT)
8. SEAT LOCK KNOB
9. BUBBLE MACHINE
10. BUBBLE SOLUTION CONTAINER*
11. REAR WHEEL (×2; LEFT AND RIGHT)

**BUBBLE SOLUTION NOT INCLUDED*

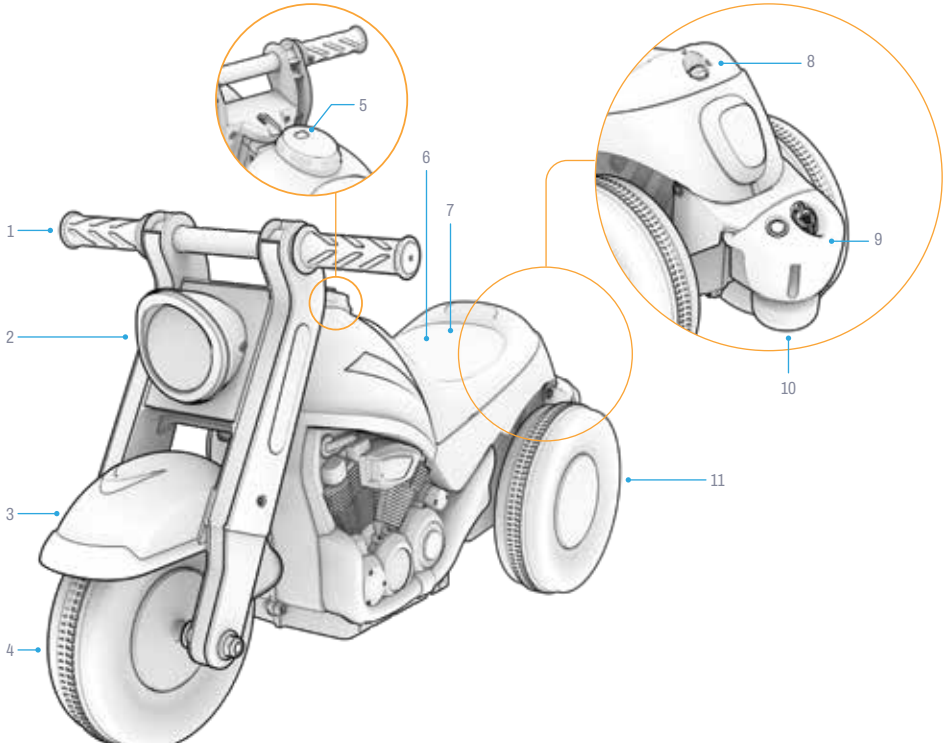
1
2
3
4
5
6
7
8
9
10
11

1.3 What's in the Box

Parts:

A



FRAME

B



REAR WHEEL (X2)

C



HUB CAP (X2)

D



HANDLEBAR

E



HANDGRIP

F



FRONT FORK

G



HEADLIGHT

H



FENDER

I



FRONT WHEEL

J



BUBBLE MACHINE COMPONENT

K



BUBBLE SOLUTION CONTAINER

Tools & Additional Hardware:

L



REAR AXLE

M



FRONT AXLE

N



M8 × 122MM BOLT WITH NUT ON THE END

O



M4 × 12MM SCREW (×9)

P

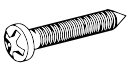

M4 × 25MM SCREW (×3)

Q

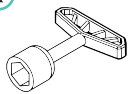

M8 SIZE SOCKET WRENCH (×2)

R

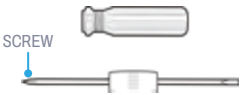

PHILLIPS-HEAD SCREWDRIVER
(NOTE: ONLY THE SCREW IS USED FOR ASSEMBLY)

1.4 Online Resources

Scan for our most updated product onboarding materials and support resources.

Find our collection of user manuals at https://ridejetson.com/pages/product-manuals

2. INSTALLATION INSTRUCTIONS.

2.1 Starting Notes

- KICK OFF YOUR ADVENTURE RIGHT: PRIOR TO USE OF THIS PRODUCT, CAREFULLY READ THE ENTIRE USER MANUAL, INCLUDING SAFETY WARNINGS. MAKE SURE YOU UNDERSTAND, ACCEPT, AND ADHERE TO ALL:
  - MANUFACTURER'S RECOMMENDATIONS.
  - SAFETY INSTRUCTIONS AND WARNINGS.
  - LOCAL RIDING AND OPERATIONAL LAWS AND ORDINANCES.

- REMOVE ALL PROTECTIVE PACKAGING PIECES PRIOR TO BEGINNING SETUP.

- THE DIRECTIONS GIVEN IN THIS MANUAL—RIGHT, LEFT, FRONT/FORWARD, AND REAR/BACK—ARE ORIENTED AS THE RIDER WOULD SEE THEM WHEN SITTING ON THE FULLY-ASSEMBLED PRODUCT. THE "RIGHT SIDE" OF THE PRODUCT, FOR EXAMPLE, IS THE SIDE WHERE THE RIDER'S RIGHT HAND WILL BE.

2.2 Helmet Safety

A HELMET SHOULD BE WORN BY THE RIDER AT ALL TIMES.



IMPROPER POSITIONING:
THE FOREHEAD IS EXPOSED.
A FALL COULD RESULT IN
SERIOUS INJURY.



PROPER POSITIONING:
THE FOREHEAD IS
COVERED
BY THE HELMET.

*Wear a helmet, appropriate clothing, shoes, and safety gear. Avoid clothing that can get caught into or under the wheels. Closed-toe, flat shoes are recommended. Wear an ASTM F1492 approved helmet and protective gear to prevent injury in the event of an accident.

2.3 Attaching the Rear Wheels



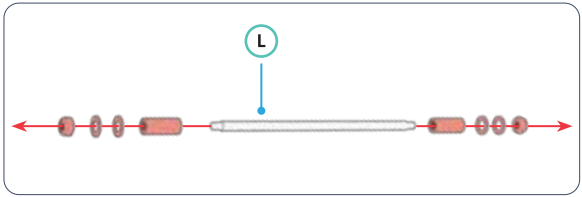

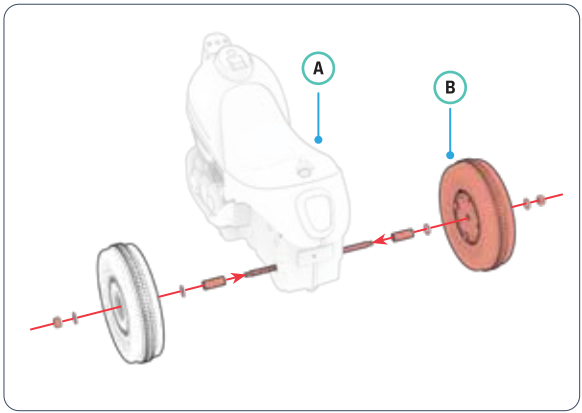

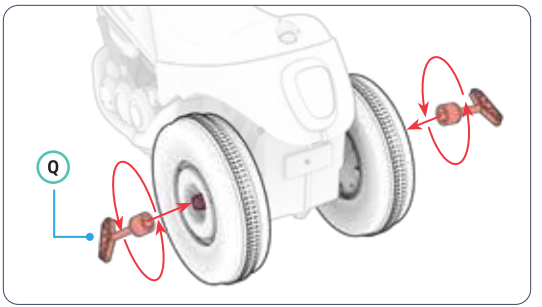
Q

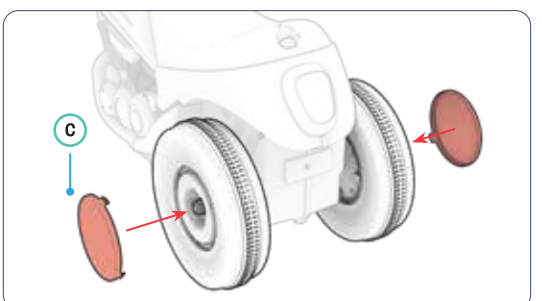
C





2.4 Assembling & Attaching the Front Unit

A. Assembling the Front Unit

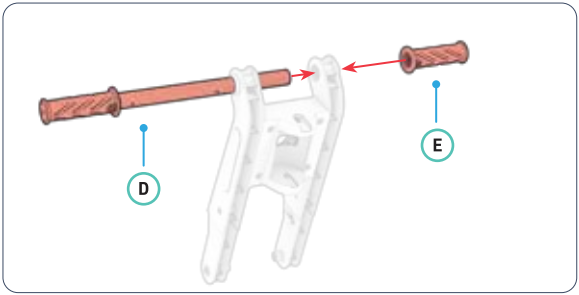

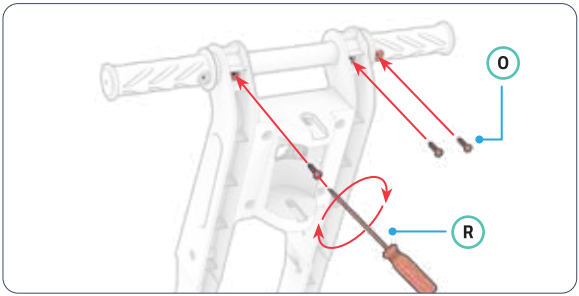

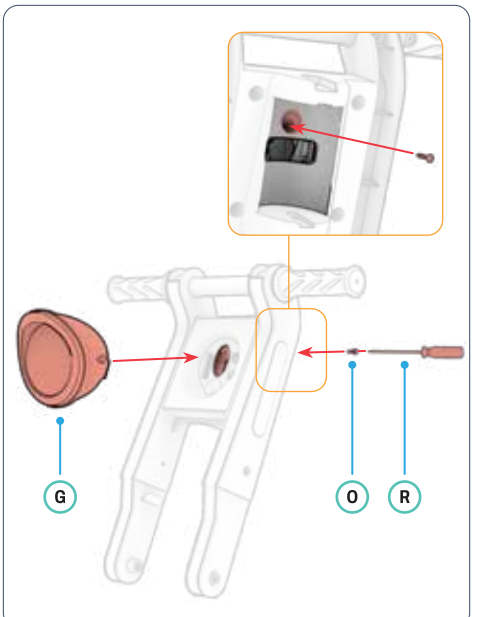
G
O
R

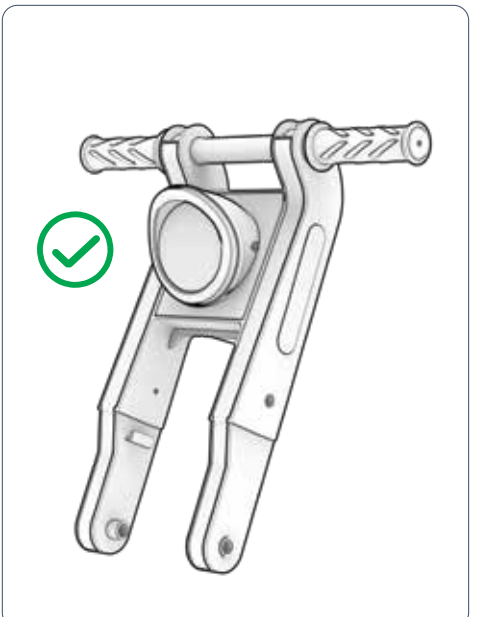

B. Attaching the Front Unit to the Frame

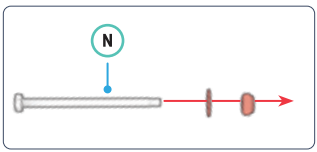

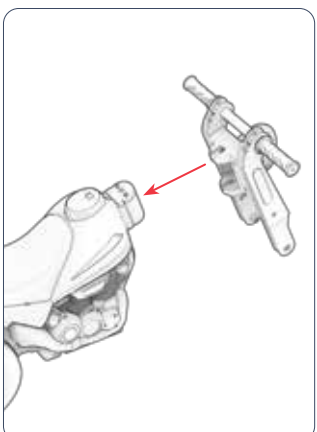

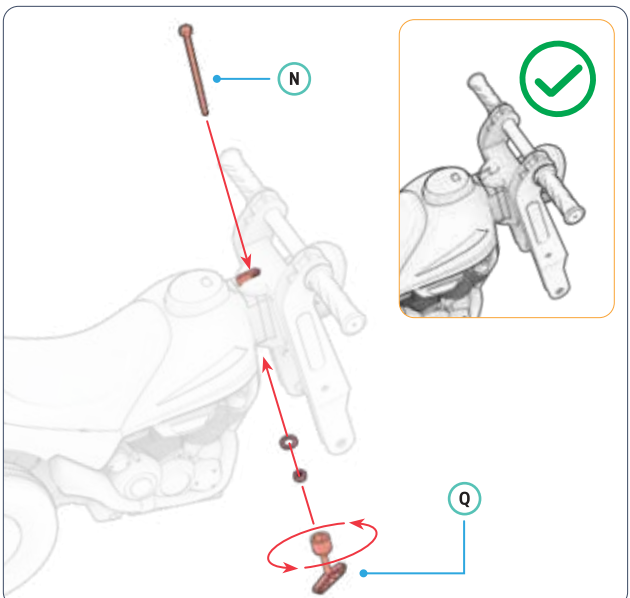

2.5 Attaching the Fender



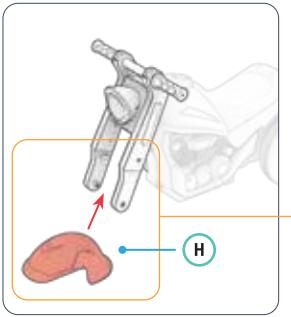



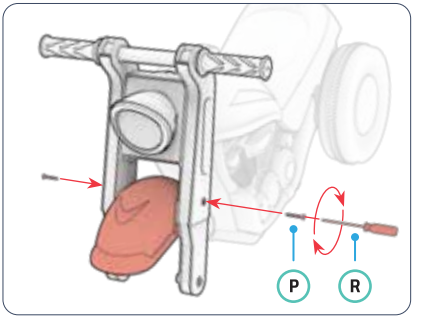



2.6 Attaching the Front Wheel



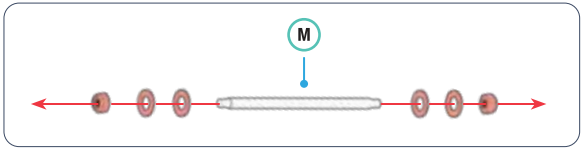

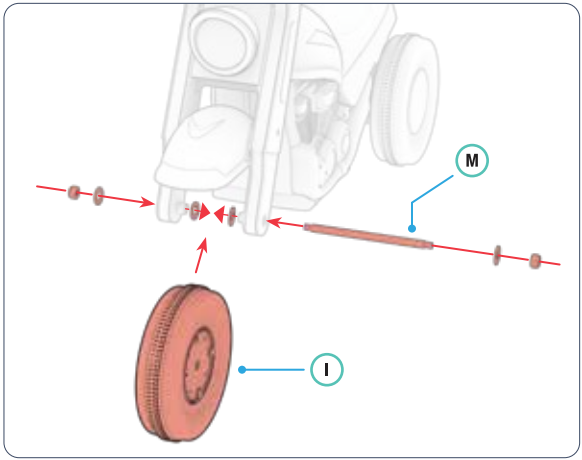

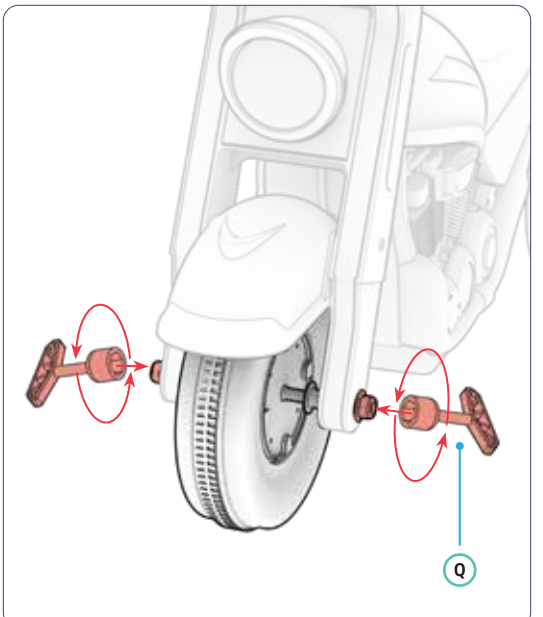
Q

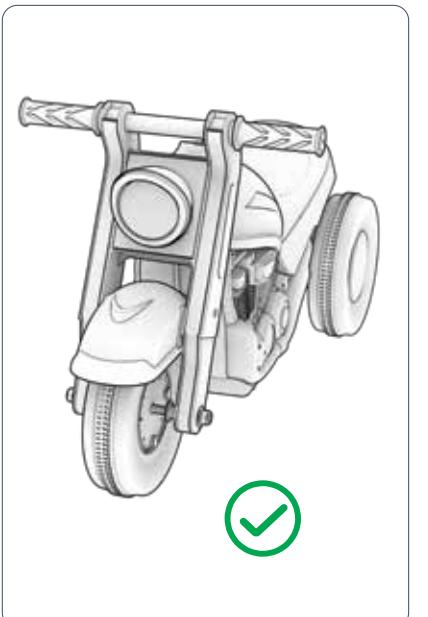

2.7 Connecting & Attaching the Bubble Machine



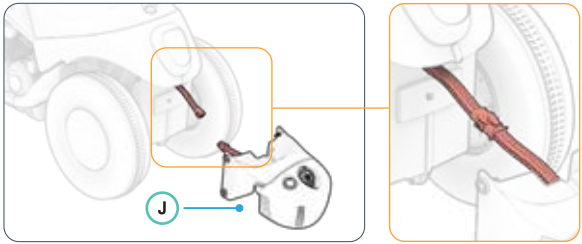

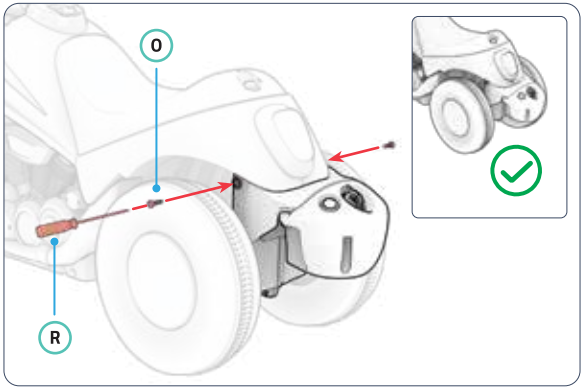



2.8 Filling & Attaching the Bubble Solution Container

BUBBLE SOLUTION NOT INCLUDED. USE ONLY COMMERCIALLY AVAILABLE BUBBLE SOLUTIONS.

⚠ **CAUTION:**
- Bubble solution not for human consumption.
- Keep bubble solution away from eyes. In case of contact with eyes, flush eye thoroughly with water.

IMPORTANT: Do not overfill bubble solution container.

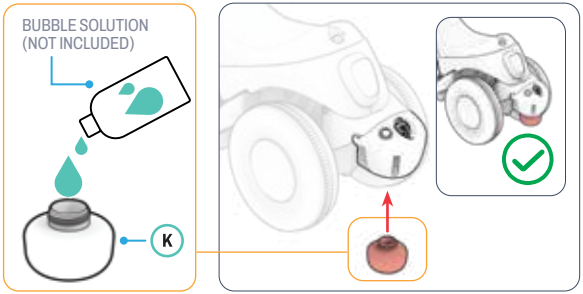

TO REFILL:

1. REMOVE THE BUBBLE SOLUTION CONTAINER BY TWISTING IT OFF COUNTERCLOCKWISE.
2. ADD SOLUTION TO THE CONTAINER AND REPLACE THE CONTAINER BY TWISTING IT ON CLOCKWISE.

2.9 Inserting Batteries

YOU WILL NEED 2 AA BATTERIES (NOT INCLUDED) TO OPERATE THE BUBBLES ON YOUR RIDE-ON. TO ACCESS THE BATTERY COMPARTMENT, YOU WILL NEED THE PHILLIPS-HEAD SCREWDRIVER.

1. TWIST THE LOCK KNOB CLOCKWISE USING THE FLAT SIDE OF A PHILLIPS SCREWDRIVER TO OPEN THE SEAT, THEN LIFT IT UP.
2. LOOSEN AND REMOVE THE SCREW SECURING THE BATTERY COMPARTMENT COVER ON THE UNDERNEATH THE SEAT BY TURNING IT COUNTERCLOCKWISE WITH THE SCREWDRIVER TIP OF THE 2-BIT TOOL.
3. LIFT AND REMOVE THE BATTERY COMPARTMENT COVER.
4. PLACE 2 AA BATTERIES IN PLACE ACCORDING TO THE +/- ORIENTATION INDICATED INSIDE OF THE BATTERY COMPARTMENT.
5. REPLACE THE BATTERY COMPARTMENT COVER.
6. RE-INSERT THE SCREW AND TIGHTEN IT BY TURNING IT CLOCKWISE WITH THE SCREWDRIVER.
7. CHECK THAT THE COMPARTMENT COVER AND SCREW ARE SECURE. REPOSITION THE SEAT.
8. TWIST THE LOCK KNOB COUNTERCLOCKWISE USING THE FLAT SIDE OF A PHILLIPS SCREWDRIVER TO SECURE THE SEAT.

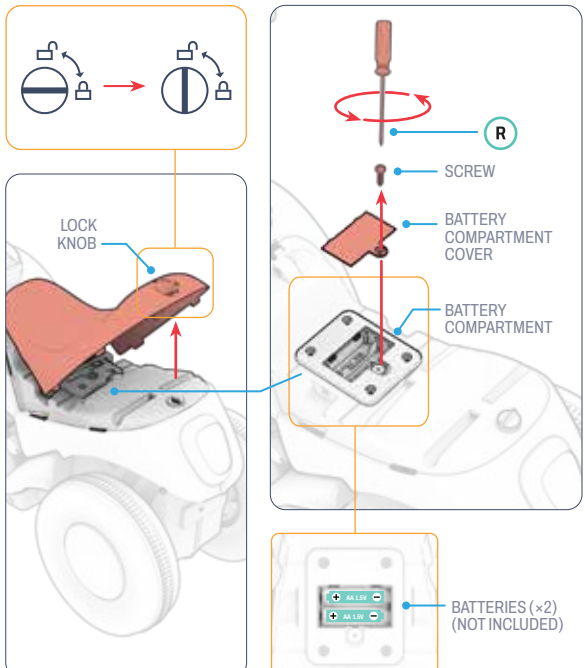

3. FEATURES & FUNCTIONS.

3.1 Using the Bubbles

TO TURN BUBBLES & SOUND ON: PRESS THE BUTTON ONCE TO TURN IT ON; PRESS IT AGAIN TO TURN IT OFF.

IMPORTANT: ALWAYS REMEMBER TO TURN OFF ALL FUNCTIONS AFTER A RIDE.

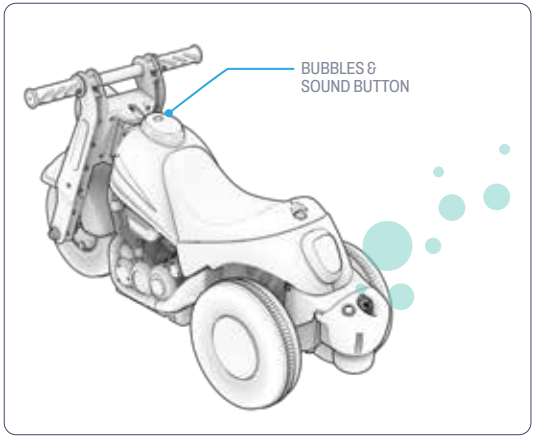

4. OPERATING INSTRUCTIONS.

4.1 Pre-Ride Safety Checks

CONDUCT THESE IMPORTANT SAFETY CHECKS BEFORE EVERY JOURNEY:

Steering

- CHECK THAT THE HANDLEBAR IS SECURELY TIGHTENED TO THE FRAME.
- CHECK THAT THE HANDLEBAR AND FRONT WHEEL ROTATE IN ALIGNMENT.

Wheels & Tires

- CHECK THAT THE WHEELS ROTATE FREELY.
- CHECK WHEELS FOR EXCESSIVE WEAR OR ANY DAMAGE.
- CHECK THAT THE WHEELS ARE SECURED TO THE FRAME.

4.2 Riding

MOVING: WHILE SEATED, PUSH BOTH FEET OFF THE GROUND TO PROPEL FORWARD. TO COAST, KEEP BOTH FEET LIFTED.

TURNING: WHILE MOVING FORWARD, ROTATE THE HANDLEBAR TO THE LEFT OR RIGHT.

STOPPING: PLACE BOTH FEET ON THE GROUND.

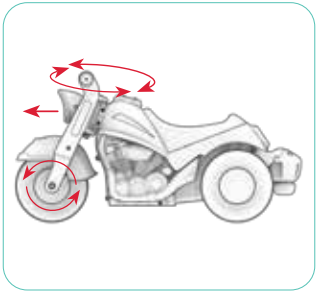

USER MAINTENANCE INSTRUCTIONS.

Take good care of your Jetson to keep it riding smoothly and safely. Here's how:

Cleaning Your Jetson:

- TO CLEAN THE PRODUCT, CAREFULLY WIPE WITH A DAMP CLOTH AND THEN DRY WITH A DRY CLOTH.
- DO NOT APPLY WATER DIRECTLY TO THE PRODUCT. WATER CAN CAUSE DAMAGE TO THE ELECTRICAL SYSTEM OR CAUSE FRAME DETERIORATION, WHICH COULD LEAD TO A MALFUNCTION THAT PUTS RIDER SAFETY AT RISK.

Storing Your Jetson:

- STORE THE PRODUCT INDOORS AND IN A DRY PLACE.
- COVER THE PRODUCT TO PROTECT IT AGAINST DUST.

Precautions:

- KEEP AWAY FROM FIRE AND EXCESSIVE HEAT.
- AVOID INTENSE PHYSICAL IMPACT AND/OR SEVERE VIBRATION.
- RIDE THE PRODUCT ON A SMOOTH, FLAT SURFACE.
- PROTECT FROM WATER OR MOISTURE.
- CONTACT THE JETSON CARE TEAM IF THERE ARE ANY ISSUES WITH THE PRODUCT.

LOVING YOUR RIDE?

Leave a review at
ridejetson.com/reviews.
We can't wait to hear from you!
#MakeMoves

CONNECT WITH US.

RIDEJETSON.COM/SUPPORT
RIDEJETSON.COM/CHAT

1-844-585-7462

Be sure to follow @ridejetson on social media to learn about fantastic offers, giveaways, and all the latest Jetson news.


JETSON


JETSON