JETSON

Fade

Light-Up JetKart® & Hoverboard Combo

A guide for your ride.

IMPORTANT: READ CAREFULLY AND RETAIN FOR FUTURE REFERENCE.

MODEL SKU: JFADE-BLK

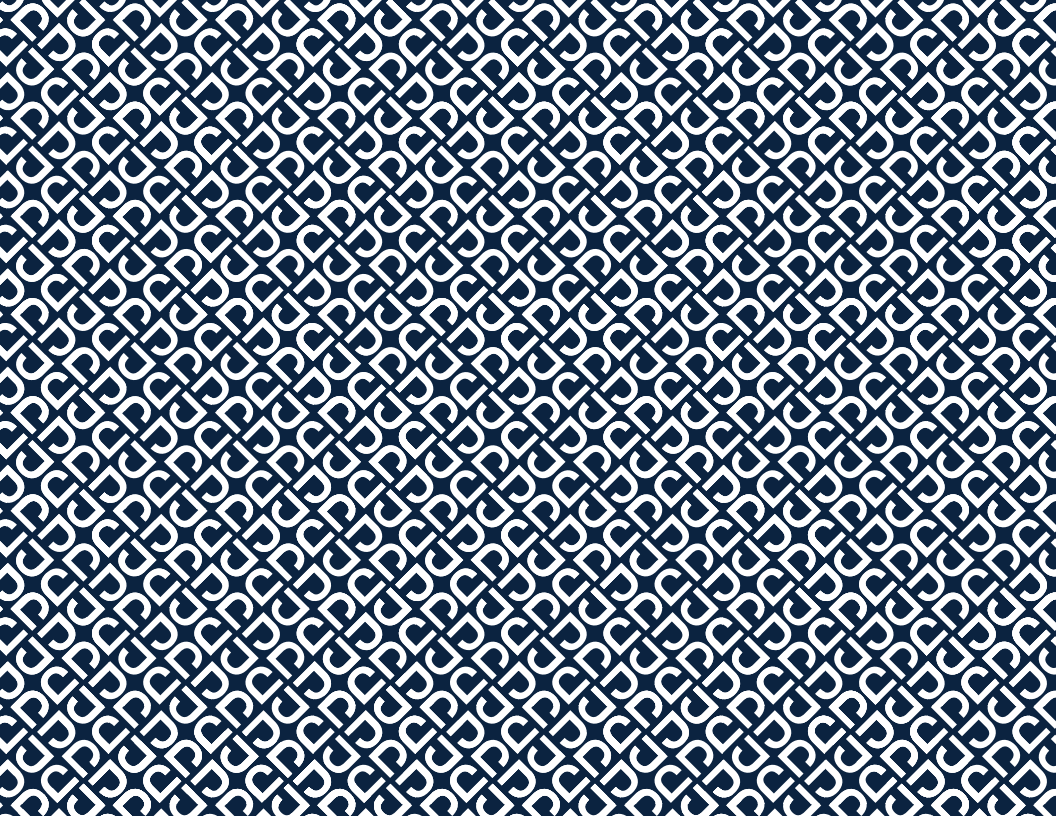

Jetson's top two riding rules:
Be safe. Have fun!

Contents

Safety Warnings 4

Warranty Coverage 5

1. About Your Product

1.1 What's in the Box 6

1.2 Product Overview 8

1.3 Product Specs 12

1.4 Online Resources 13

2. Getting Started

2.1 Starting Notes 14

2.2 Charging the Hoverboard 15

2.3 Attaching the Handles 17

2.4 Attaching the Brackets 21

2.5 Attaching the Seat Back 24

2.6 Assembling the Frame 26

2.7 Attaching the JetKart to the Hoverboard 29

2.8 Connecting the Seat Lights to the Power Source 32

2.9 Adjusting the Length of the JetKart 33

2.10 Adjusting the Height of the Seat Back 36
2.11 Powering On & Off 39
2.12 Recalibrating the Hoverboard 40

3. Features & Functions

3.1 Understanding the Hoverboard Indicator Lights 41
3.2 Using the Lights 42
3.3 Using the Bluetooth Speaker 43

4. Making Moves

4.1 Getting on the Kart 44
4.2 Riding the Kart 45
4.3 Riding the Hoverboard on its Own 47
4.4 Maximizing Speed & Run Time 51

5. Safe & Smooth Journeying

5.1 Helmet Safety 52
5.2 Hoverboard Motor Care 53
5.3 Care & Maintenance 54
5.4 Hoverboard Troubleshooting 55

Safety Warnings

- Before use, please read the user manual and safety warnings carefully, and make sure you understand and accept all the safety instructions. The user will be responsible for any loss or damage caused by improper use.
- **Failure to use correct charger can result in fire and explosion, resulting in property damage, injury, and death.**
- Before each cycle of operation, the operator shall perform the preoperation checks specified by the manufacturer: That all guards and pads originally supplied by the manufacturer are in proper place and in serviceable condition; That the braking system is functioning properly; That any and all axle guards, chain guards, or other covers or guards supplied by the manufacturer are in place and in serviceable condition; That tires are in good condition, inflated properly, and have sufficient tread remaining; The area that the product is to be operated should be safe and suitable for safe operation.
- Components shall be maintained and repaired in accordance with the manufacturer's specifications and using only the manufacturer's authorized replacement parts with installation performed by dealers or other skilled persons.
- Warning against recharging non-rechargeable batteries.
- Don't allow hands, feet, hair, body parts, clothing, or similar articles to come in contact with moving parts, wheels, or drive train, while the motor is running.
- This product should not be used by children or persons with reduced physical, sensory or mental capabilities, or lack of experience and knowledge, unless they have been given supervision or instruction (IEC 60335-1/A2:2006).
- Unsupervised children should not play with the product (IEC 60335-1/A2:2006).
- Adult supervision is required.
- The rider should not exceed 220 lb.
- Units shall not be operated to perform racing, stunt riding, or other maneuvers, which may cause loss of control, or may cause uncontrolled operator/passenger actions or reactions.
- Never use near motor vehicles.
- Avoid sharp bumps, drainage grates, and sudden surface changes. Scooter may suddenly stop.
- Avoid streets and surfaces with water, sand, gravel, dirt, leaves, and other debris. Wet weather impairs traction, braking, and visibility.
- Avoid riding around flammable gas, steam, liquid, or dust that could cause fire.
- Operators shall adhere to all of the manufacturer's recommendations and instructions, as well as comply with all laws and ordinances: Units without headlights shall be operated only with adequate daylight conditions of visibility, and; Owners shall be encouraged to highlight (for conspicuity) using lighting, reflectors, and for low-riding units, signal flags on flexible poles.
- Persons with the following conditions shall be cautioned not to operate: Those with heart conditions; Pregnant women; Persons with head, back, or neck ailments, or prior surgeries to those areas of the body; and persons with any mental or physical conditions that may make them susceptible to injury or impair their physical dexterity or mental capabilities to recognize, understand, and perform all of the safety instructions and to be able to assume the hazards inherent in unit use.
- Do not ride at night.
- Do not ride after drinking or taking prescription medication.
- Do not carry items when riding.
- Never operate the product barefooted.
- Always wear shoes and keep shoelaces tied.
- Make sure your feet are always placed securely on the deck.
- Operators always shall use appropriate protective clothing, including but not limited to a helmet, with appropriate certification, and any other equipment recommended by the manufacturer: Always wear protective equipment such as helmet, knee pads, and elbow pads.
- Always give way to pedestrians.
- Be alert to things in front and far away from you.
- Do not allow distractions when riding, such as answering the phone or engaging in any other activities.
- The product cannot be ridden by more than one person.
- When you ride the product along with other riders, always keep a safe distance to avoid a collision.
- When turning, be sure to maintain your balance.
- Riding with improperly adjusted brakes is dangerous and can result in serious injury or death.
- The brake may become hot while operating, do not touch the brake with your bare skin.

- Applying brakes too hard or too suddenly can lock up a wheel, which could cause you to lose control and fall. Sudden or excessive application of the brake may result in injury or death.
- If the brake loosens, please adjust with the hexagon wrench, or please contact the Jetson Care Team.
- Replace worn or broken parts immediately.
- Check whether all safety labels are in place and understood before riding.
- The owner shall allow the use and operation of the unit after a demonstration that such operators can understand and operate all components of the unit before use.
- Do not ride without proper training. Do not ride at high speeds, on uneven terrain, or on slopes. Do not perform stunts or turn abruptly.
- Recommended for indoor use.
- Prolonged exposure to UV rays, rain and the elements may damage the enclosure materials, store indoors when not in use.
- WARNING – Risk of Fire and Electric Shock – No User Serviceable Parts.
- AVERTISSEMENT- Risque d'incendie et de choc électrique - Aucune des pièces ne peut être réparée par l'utilisateur.

California Proposition 65

⚠WARNING:

This product can expose you to chemicals including Cadmium, which is known to the State of California to cause cancer and birth defects or other reproductive harm. For more information go to: www.P65Warnings.ca.gov.

MODIFICATIONS
Do not attempt to disassemble, modify, repair, or replace the unit or any components of the unit without instruction from the Jetson Care Team. This will void any warranty, and can lead to malfunctions which may cause injury.

ADDITIONAL OPERATION PRECAUTIONS
Do not lift the product off the ground while it is on and the wheels are in motion. This can result in freely spinning wheels, which may cause injury to yourself or others nearby. Do not jump on or off the product, and do not jump while using it. Always keep your feet firmly planted on the foot rest while in operation. Always check the battery charge before using.

Warranty Coverage

GENERAL LIMITED WARRANTY
Your new Jetson product is warranted against defects in materials and workmanship as indicated on ridejetson.com/warranty for a period of time from the date of original retail purchase when used in accordance with Jetson's user manuals (refer to ridejetson.com/support). **Under this warranty, you will be able to direct your claims to Jetson even in situations where you purchased the Jetson Product from one of our authorized retailers.** To read the full terms of our warranty, visit ridejetson.com/warranty.

1. About Your Product

1.1 What's in the Box

A. REAR FRAME
B. SEAT BACK
C. HANDLES (×2)
D. ADJUSTABLE BRACKETS (×2, LEFT AND RIGHT)
E. CENTER CONNECTOR
F. FRONT FRAME
G. VELCRO STRAP (×4, 2 PRE-ATTACHED PLUS 2 SPARE)
H. HOVERBOARD
I. HOVERBOARD CHARGER

HARDWARE AND TOOLS INCLUDED FOR ASSEMBLY, ADJUSTMENT, & MAINTENANCE:



SMALL BOLTS (×3, INCLUDING ONE SPARE)
PM 5MM X 40MM



SMALL NUTS (×3, INCLUDING ONE SPARE)
M5



LARGE PLASTIC BOLTS (×3, INCLUDING ONE SPARE)
M 10MM X 30MM



KNOBS (×3)
M12



2-BIT PHILLIPS HEAD SCREWDRIVER (A) AND 4MM ALLEN KEY TOOL (B)



10MM/15MM DOUBLE-SIDED WRENCH

* ADULTS MUST ASSIST CHILDREN IN THE ASSEMBLY AND INITIAL ADJUSTMENT PROCEDURES OF THE PRODUCT.

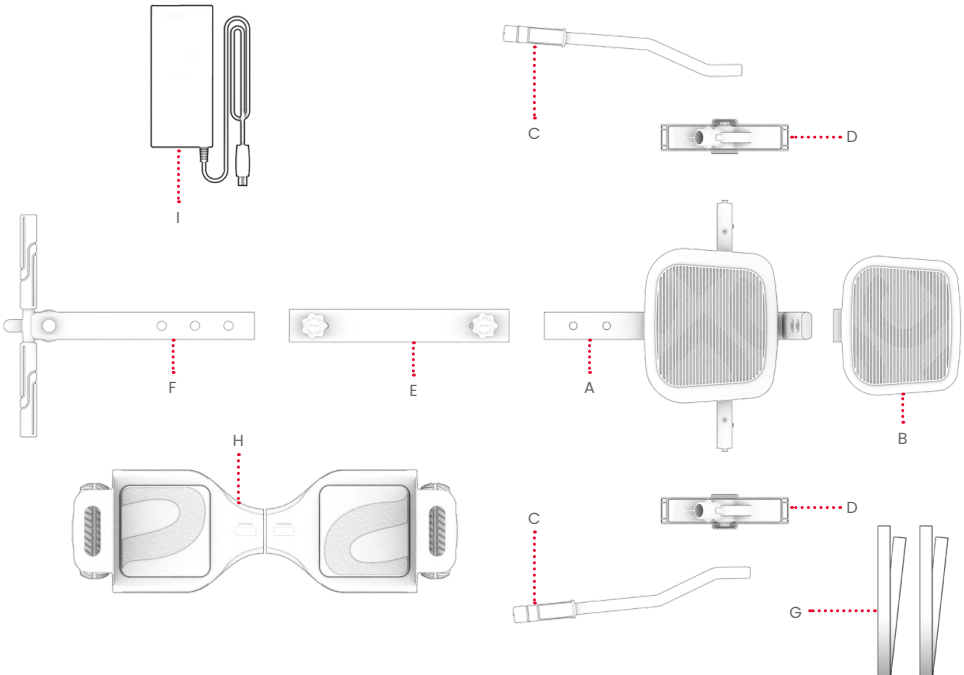

NOTE: IMAGES MAY NOT REFLECT EXACT APPEARANCE OF ACTUAL PRODUCT.

1.2 Product Overview

1. SEAT
   1A. SEAT LIGHTS
2. HANDLEBAR (X2, LEFT AND RIGHT)
3. FRAME SIZING ADJUSTMENT KNOB (X2, FRONT AND BACK)
4. FOOTREST (X2, LEFT AND RIGHT)
5. FRONT WHEEL

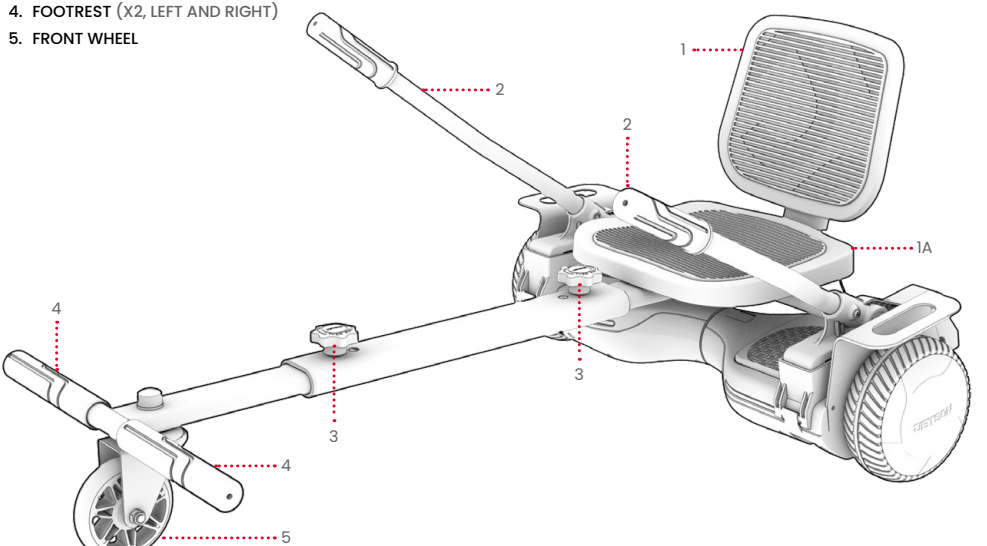

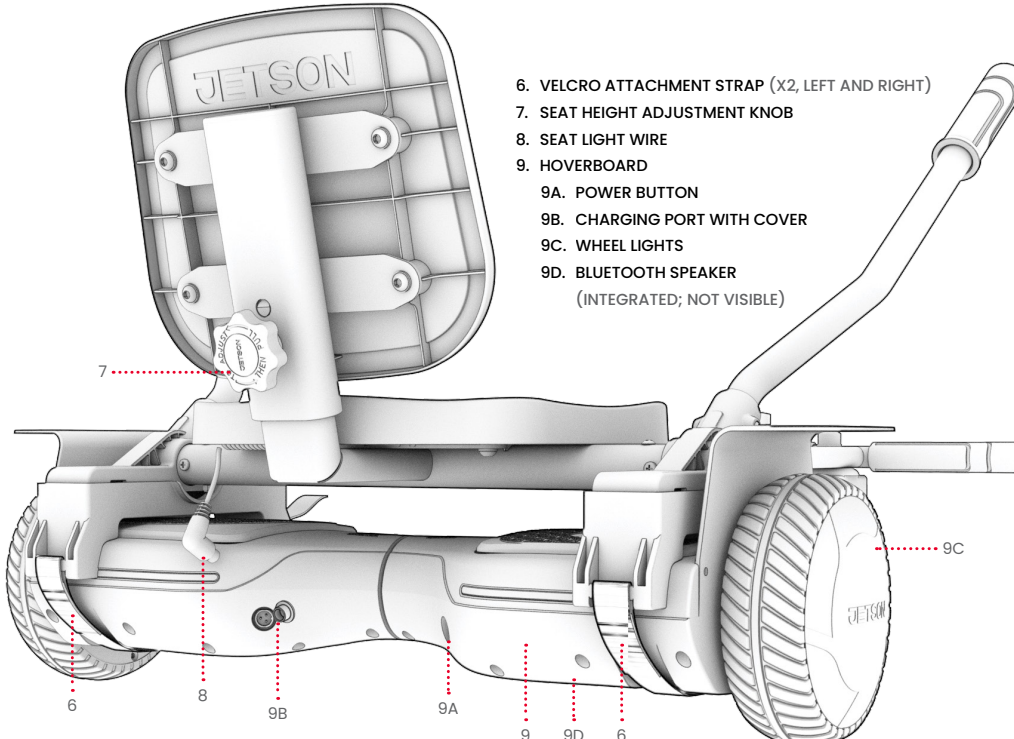

6. VELCRO ATTACHMENT STRAP (X2, LEFT AND RIGHT)
7. SEAT HEIGHT ADJUSTMENT KNOB
8. SEAT LIGHT WIRE
9. HOVERBOARD
   - 9A. POWER BUTTON
   - 9B. CHARGING PORT WITH COVER
   - 9C. WHEEL LIGHTS
   - 9D. BLUETOOTH SPEAKER (INTEGRATED; NOT VISIBLE)

9E. FOOTPAD (X2, LEFT AND RIGHT)

9F. STATUS INDICATOR LIGHT

9G. BATTERY INDICATOR LIGHT

9H. CARRYING HANDLE (X2, LEFT AND RIGHT)

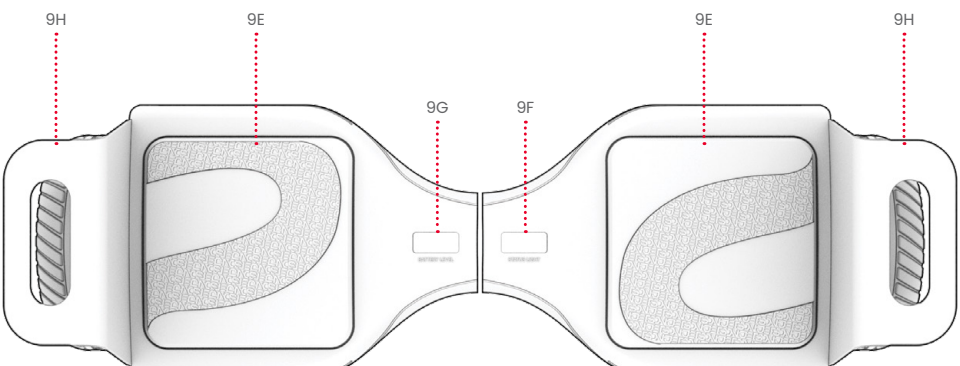

1.3 Product Specs

FADE JETKART®:

- PRODUCT WEIGHT: 13.3 LB
- DIMENSIONS: 38.6 - 46.0" (L) × 18.3" (W) × 13.1 - 14.6" (H)
- WHEEL SIZE: 4"
- WEIGHT LIMIT: 220 LB
- RECOMMENDED AGE: 12+

FADE HOVERBOARD:

- SPEED: UP TO 9MPH (FOR RIDER WEIGHT UP TO 135 LB) | UP TO 6MPH (FOR RIDER WEIGHT 136 - 220 LB)*
- RUN TIME: UP TO 60 MINS (FOR RIDER WEIGHT UP TO 135 LB) | UP TO 30 MINS (FOR RIDER WEIGHT 136 - 220 LB)*
- BATTERY: 25.2V, 4.0AH LITHIUM-ION
- SPEAKER: 5.3 DYNAMIC BLUETOOTH® SPEAKER
- PRODUCT WEIGHT: 13 LB
- PRODUCT DIMENSIONS: 24.4" (L) × 7.7" (W) × 7.4" (H)
- WHEEL SIZE: 6.4"
- CHARGER: UL LISTED, 100-240V
- CHARGING TIME: UP TO 5 HOURS
- MAX CLIMBING ANGLE: 15°
- WEIGHT LIMIT: 220 LB
- RECOMMENDED AGE: 12+
- UL CERTIFICATION: UL2272

* PRODUCT SPEED, RUN TIME, BATTERY LIFE, AND OTHER SPECIFICATIONS MAY VARY BASED ON RIDER AND RIDING CONDITIONS. SEE SECTION 4.4 FOR MORE DETAILS ON CONDITIONS THAT CAN AFFECT PERFORMANCE.

1.4 Online Resources



Scan for our most updated Fade onboarding materials and support resources.

2. Getting Started

2.1 Starting Notes

- REMOVE ALL PACKAGING BEFORE BEGINNING ASSEMBLY.
- THE DIRECTIONS GIVEN IN THIS MANUAL—RIGHT, LEFT, FRONT/FORWARD, AND REAR/BACK—ARE ORIENTED AS THE RIDER WOULD SEE THEM WHEN SEATED ON THE KART OR STANDING ON THE HOVERBOARD. THE "RIGHT SIDE" OF THE FADE, FOR EXAMPLE, IS THE SIDE WHERE THE RIDER'S RIGHT FOOT WILL BE.
- THE HOVERBOARD CAN BE RIDDEN WHEN THE RIDER IS FACING EITHER DIRECTION, BUT FOR ASSEMBLY AND ORIENTATION PURPOSES CONSIDER THE REAR OF THE HOVERBOARD THE SIDE WITH THE POWER BUTTON AND CHARGING PORT.

⚠WARNING:

FAILURE TO COMPLY WITH THE FOLLOWING INSTRUCTIONS MAY RESULT IN INJURY TO THE CHILD OR OTHERS.
- KEEP SMALL PARTS AWAY FROM CHILDREN DURING ASSEMBLY.
- ACCESSORY MUST BE ASSEMBLED AND REMOVED BY AN ADULT.
- FREQUENTLY INSPECT THE PRODUCT FOR DAMAGE.

* ADULTS MUST ASSIST CHILDREN IN THE ASSEMBLY AND INITIAL ADJUSTMENT PROCEDURES OF THE PRODUCT.

2.2 Charging the Hoverboard

IT CAN TAKE UP TO 5 HOURS TO BRING A DEPLETED BATTERY TO FULL CHARGE. IF THE REAR SEAT WIRE ON THE KART IS CONNECTED TO THE HOVERBOARD (SECTION 2.8), PULL THE WIRE OUT FROM THE CHARGING PORT WHILE YOU CHARGE THE HOVERBOARD.

1. PULL OPEN THE COVER ON THE HOVERBOARD CHARGING PORT.
2. PLUG THE CHARGER INTO AN ELECTRICAL WALL OUTLET. INSERT THE OTHER END INTO THE CHARGING PORT ON THE HOVERBOARD.
3. WHILE CHARGING, THE BATTERY INDICATOR LIGHT ON THE HOVERBOARD WILL ILLUMINATE AS SHOWN IN THE BELOW CHART TO COMMUNICATE THE INCREASE IN CHARGE PERCENTAGE.
4. WHEN THE INDICATOR LIGHTS ON BOTH THE CHARGER AND THE HOVERBOARD CHANGE FROM FLASHING GREEN TO STEADY GREEN, YOUR BATTERY HAS REACHED FULL CHARGE. REMOVE THE CHARGER FROM THE CHARGING PORT AND CLOSE THE CHARGING PORT COVER.

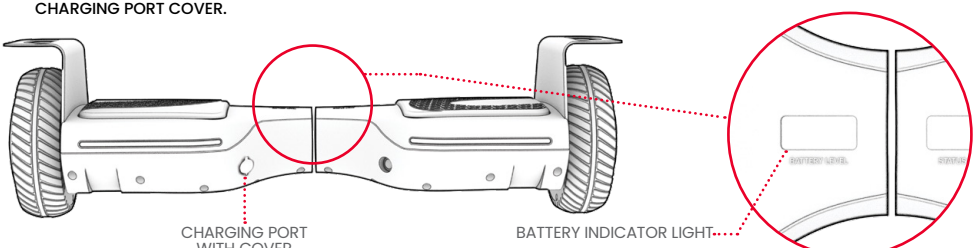

ILLUMINATION OF THE HOVERBOARD'S BATTERY INDICATOR LIGHT DURING THE CHARGING PROCESS:

BATTERY INDICATOR LIGHT	FLASHING	FLASHING	FLASHING	STEADY ILLUMINATION
CHARGE PERCENTAGE	LESS THAN 32% CHARGED	33 - 65 % CHARGED	66 - 94% CHARGED	95 - 100% CHARGED

IMPORTANT CHARGING NOTES:

- ONLY USE THE INCLUDED CHARGER OR ONE OBTAINED DIRECTLY THROUGH JETSON LABELED WITH MSL-CH29100P OR THE PART SKU PJSCKRT-CH.

  ⚠ FAILURE TO USE CORRECT CHARGER CAN RESULT IN FIRE AND EXPLOSION.

- ALWAYS KEEP THE CHARGING PORT COVER CLOSED WHEN NOT ACTIVELY CHARGING THE BATTERY.
- NEVER TURN ON THE HOVERBOARD WHILE IT IS CHARGING.
- FOR BEST BATTERY HEALTH, CHARGE THE BATTERY FULLY DURING EACH CHARGING SESSION—ABOUT 5 HOURS.
- NEVER LEAVE YOUR HOVERBOARD CHARGING OVERNIGHT OR FOR EXTENDED PERIODS OF TIME.
- DO NOT ATTEMPT TO REMOVE OR DISASSEMBLE THE BATTERY.
- CHARGING AMBIENT TEMPERATURE RANGE: 32°F(0°C)-104°F(40°C)
- OPERATING AMBIENT TEMPERATURE RANGE: 32°F(0°C)-104°F(40°C)

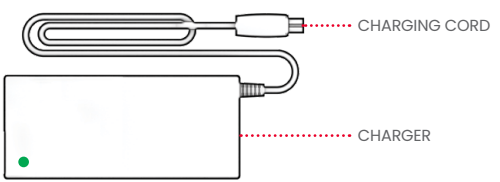

THIS IS THE MARKING
YOUR CHARGER WILL HAVE.



CHARGING INDICATOR LIGHT	FLASHING GREEN	STEADY GREEN
STATUS	CHARGING	FULLY CHARGED

2.3 Attaching the Handles

1. INSERT ONE HANDLE (C) INTO THE HANDLE TUBE EXTENDING DIAGONALLY UPWARDS FROM THE TOP OF ONE BRACKET (D), SUCH THAT THE HANDLEBAR BENDS TOWARD THE SIDE OF THE BRACKET WITH THE HOURGLASS-SHAPED HOLE.
2. ROTATE THE HANDLE IN THE TUBE SO THAT:

- THE HANDLE BENDS TOWARDS THE SIDE OF THE BRACKET WITH THE HOURGLASS-SHAPED HOLE.
- THE TWO HOLES AT BASE OF THE HANDLE ARE ALIGNED WITH THE TWO HOLES ON THE SIDE OF THE TUBE.

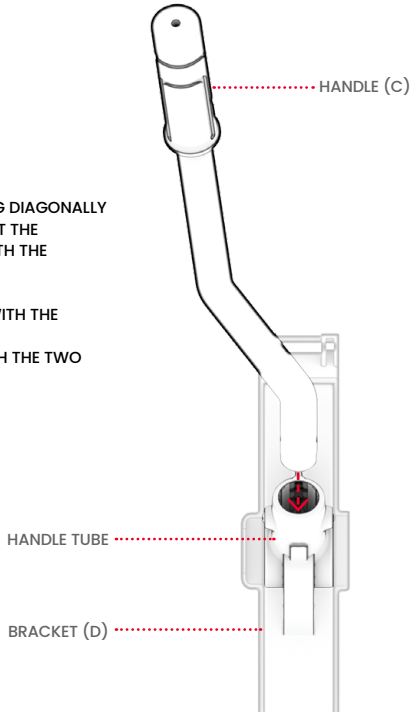

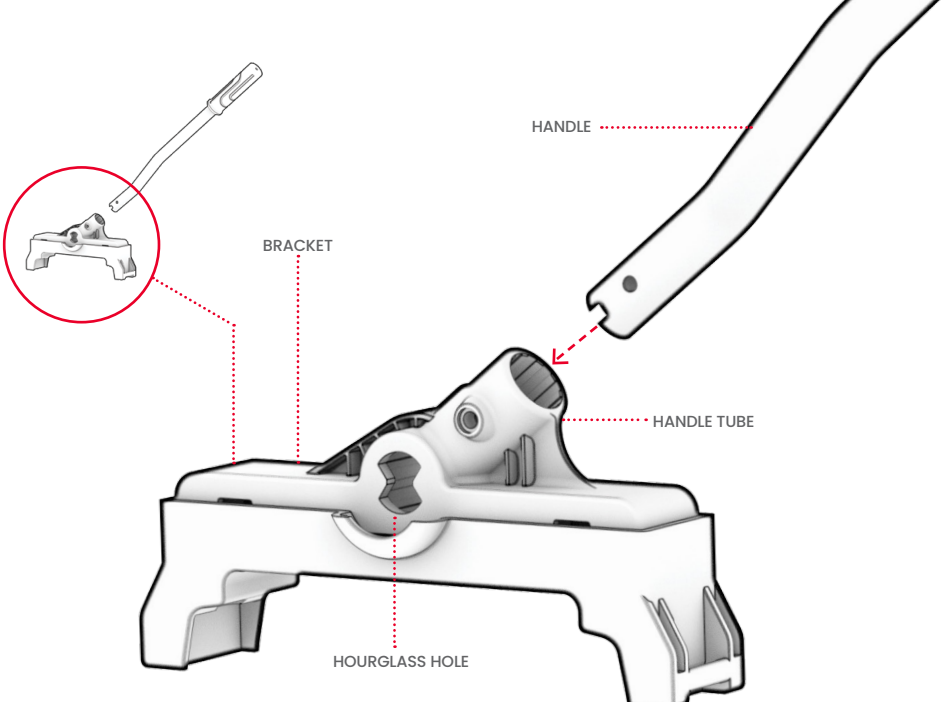
HANDLE
BRACKET
HANDLE TUBE
HOURGLASS HOLE

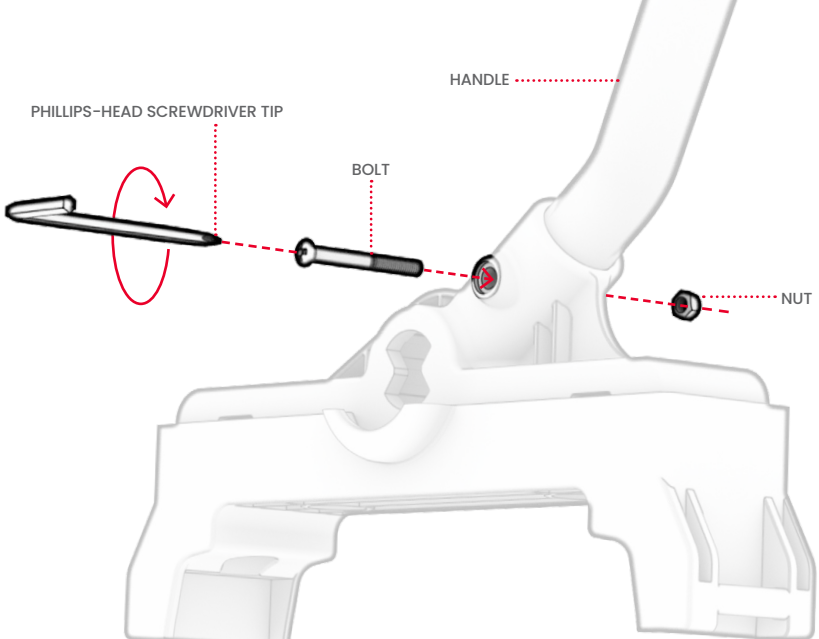

3. FROM THE SIDE OF THE BRACKET TOWARDS WHICH THE HANDLE BENDS, USE THE SCREWDRIVER-TIP OF THE 2-BIT TOOL TO TWIST ONE OF THE SMALL BOLTS CLOCKWISE INTO THE ALIGNED HOLES OF THE BRACKET TUBE AND THE HANDLE.
4. WHEN THE BOLT IS HALFWAY INSERTED, USE YOUR OTHER HAND TO POSITION A SMALL NUT ON THE OPPOSITE HOLE, WITH THE NARROWER SIDE OF THE NUT FACING IN.

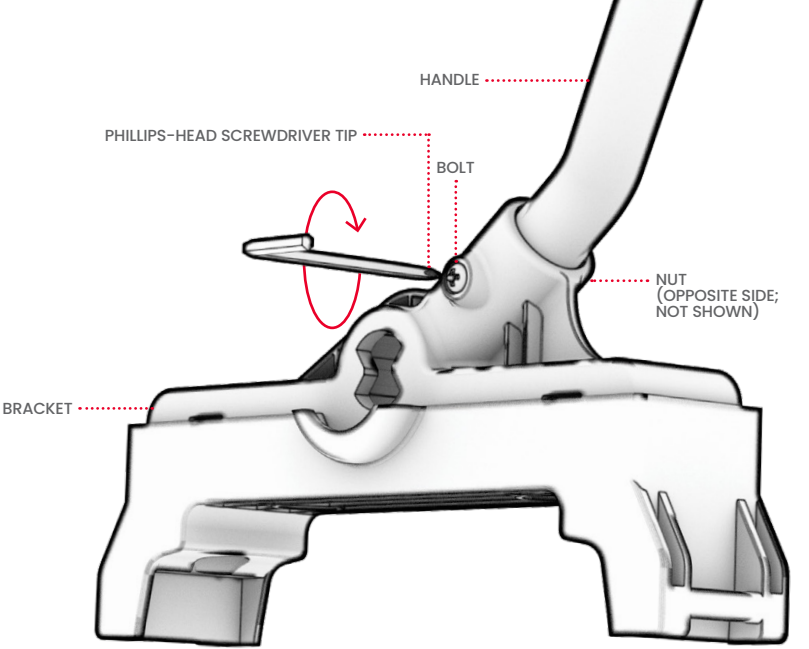

5. HOLD THE NUT STEADY AND FULLY TIGHTEN THE BOLT INTO THE NUT BY TURNING IT CLOCKWISE WITH THE SCREWDRIVER.
6. REPEAT STEPS 1–5 WITH THE OTHER BRACKET, HANDLE, BOLT, AND NUT.
7. CHECK THAT THE HANDLES ARE SECURE IN THE BRACKETS.

2.4 Attaching the Brackets

1. POSITION ONE BRACKET ON EACH SIDE OF THE SEAT BASE SUCH THAT THE HANDLES EXTEND FORWARD FROM THE SEAT BACK SUPPORT.
2. SLIDE BOTH BRACKETS ONTO THE SEAT BASE CROSSBAR.

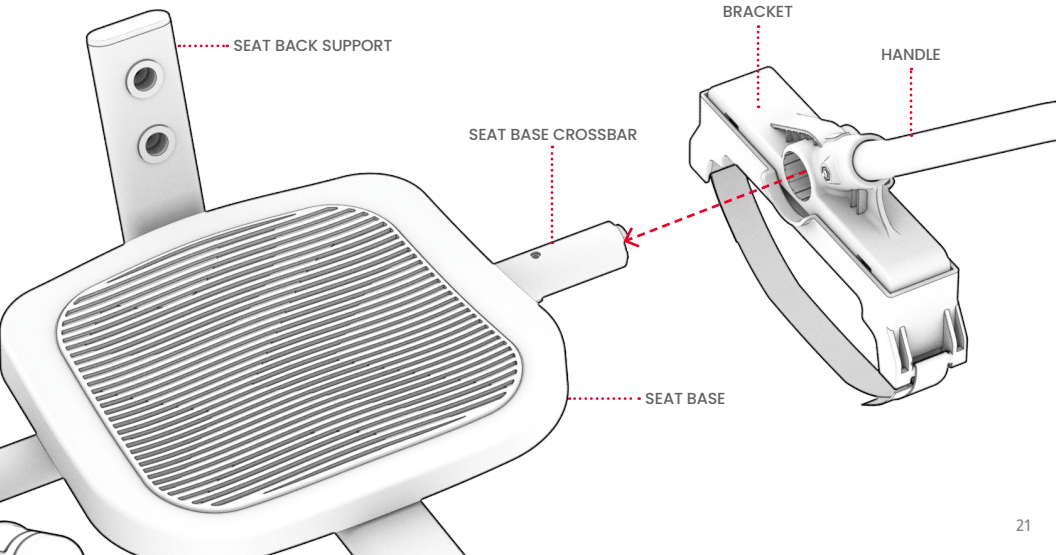

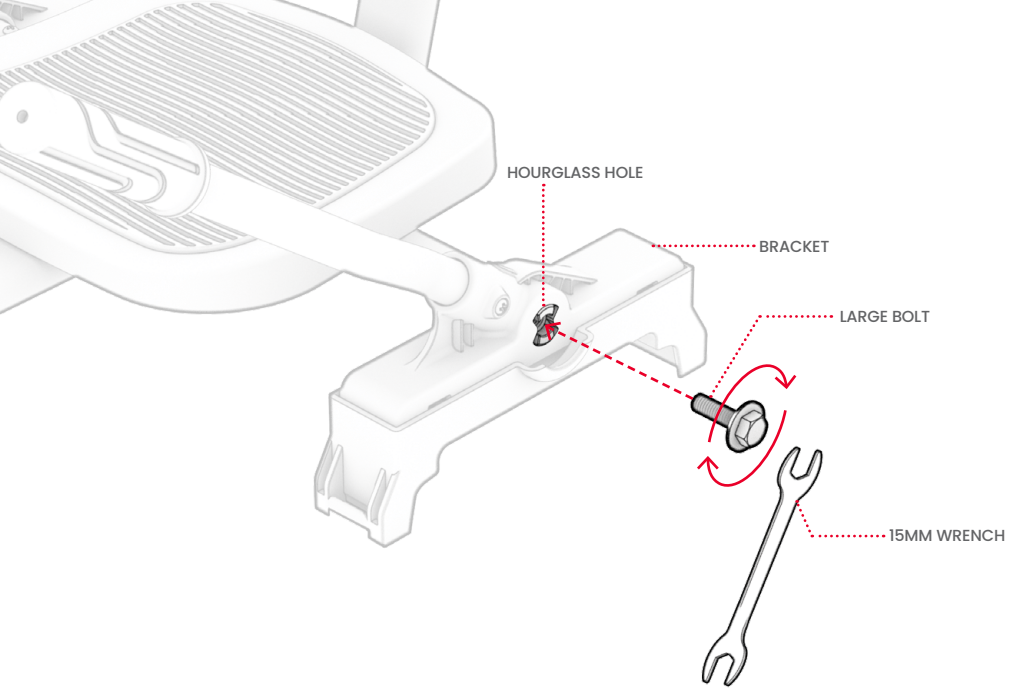

3. TWIST A LARGE BOLT CLOCKWISE INTO THE HOURGLASS-SHAPED HOLE OF EACH BRACKET. TIGHTEN THE BOLTS BY TURNING EACH ONE CLOCKWISE WITH THE 10MM WRENCH.

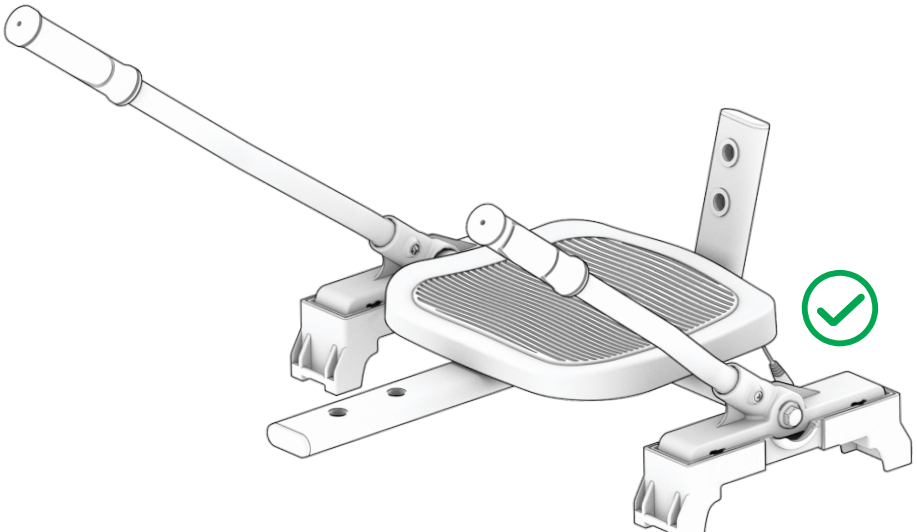

4. CHECK THAT THE BRACKETS ARE SECURE ON THE SEAT BASE.

2.5 Attaching the Seat Back

1. POSITION THE SEAT BACK (B) OVER THE REAR FRAME (A) SUCH THAT THE SEAT BACK STEM IS ABOVE THE SEAT BACK SUPPORT AND THE PADDED SEAT BACK IS FACING THE FRONT OF THE SEAT BASE.
2. SLIDE THE SEAT BACK STEM ONTO THE SEAT BACK SUPPORT.

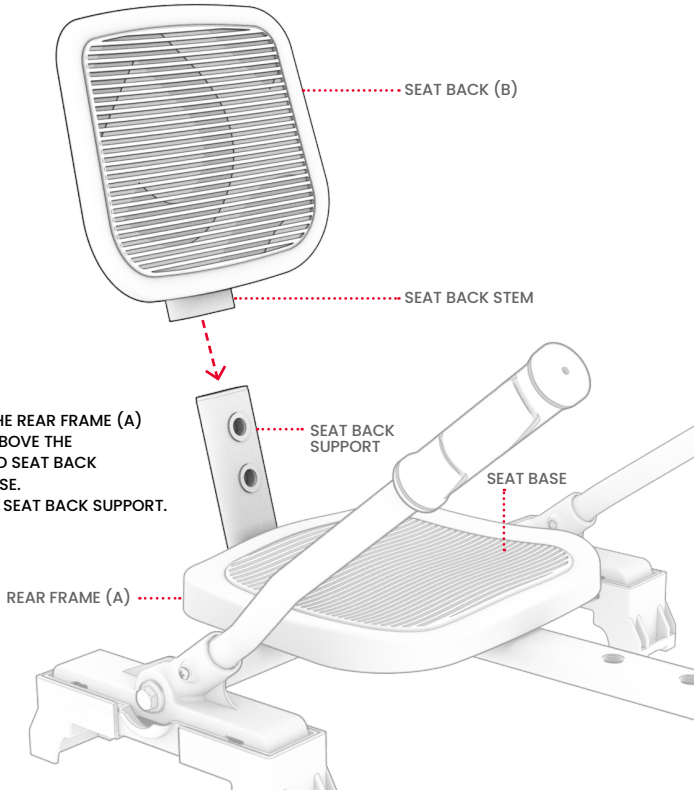

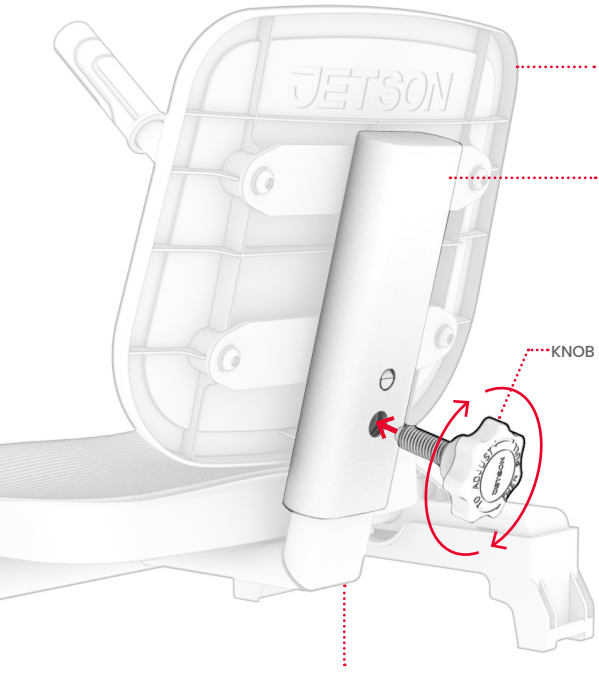

3. POSITION THE SEAT BACK SUCH THAT THE HOLE IN THE SEAT BACK SUPPORT IS ALIGNED WITH ONE OF THE HOLES IN THE SEAT BACK STEM.
4. FROM THE BACK, INSERT A KNOB INTO THE ALIGNED HOLES BY TWISTING IT IN CLOCKWISE. FULLY TIGHTEN THE KNOB.
5. CHECK THAT THE SEAT BACK IS SECURE.

2.6 Assembling the Frame

1. POSITION THE CENTER CONNECTOR (E) ON YOUR WORK SURFACE SO THAT THE SIDE WITH THE LARGER HOLES IS FACING UP.
2. POSITION THE REAR FRAME (A) AND FRONT FRAME (F) ON OPPOSITE ENDS OF THE CENTER CONNECTOR SO THAT THE FRAME BARS ARE IN LINE.
3. SLIDE THE FRAME BARS OF THE REAR FRAME AND FRONT FRAME INTO THE CENTER CONNECTOR.

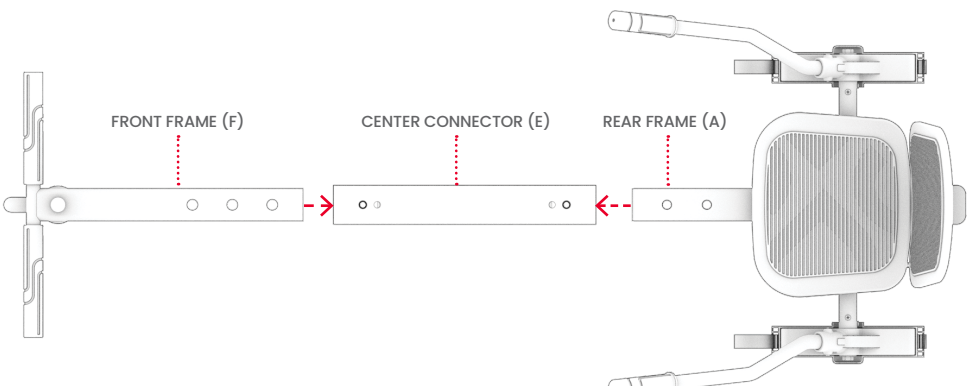

4. AS NECESSARY, ADJUST THE PIECES UNTIL THE HOLES IN THE CENTER CONNECTOR ARE ALIGNED WITH THE HOLES IN THE FRONT FRAME AND REAR FRAME BARS.

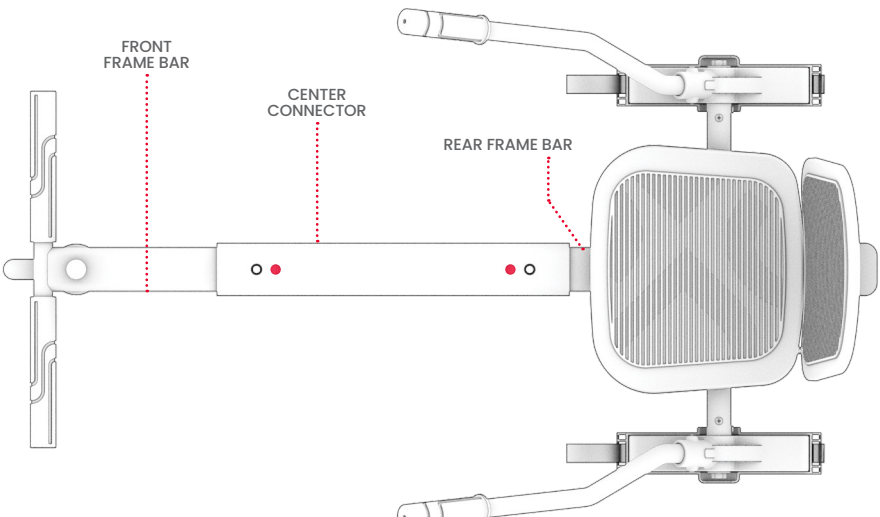

5. INSERT 1 KNOB INTO BOTH SETS OF ALIGNED HOLES AND, WHILE APPLYING A SLIGHT DOWNWARD PRESSURE ON THE KNOB, TWIST IT CLOCKWISE IT IS FULLY INSERTED.
6. CHECK THAT THE KNOBS AND FRAME PIECES ARE SECURE.

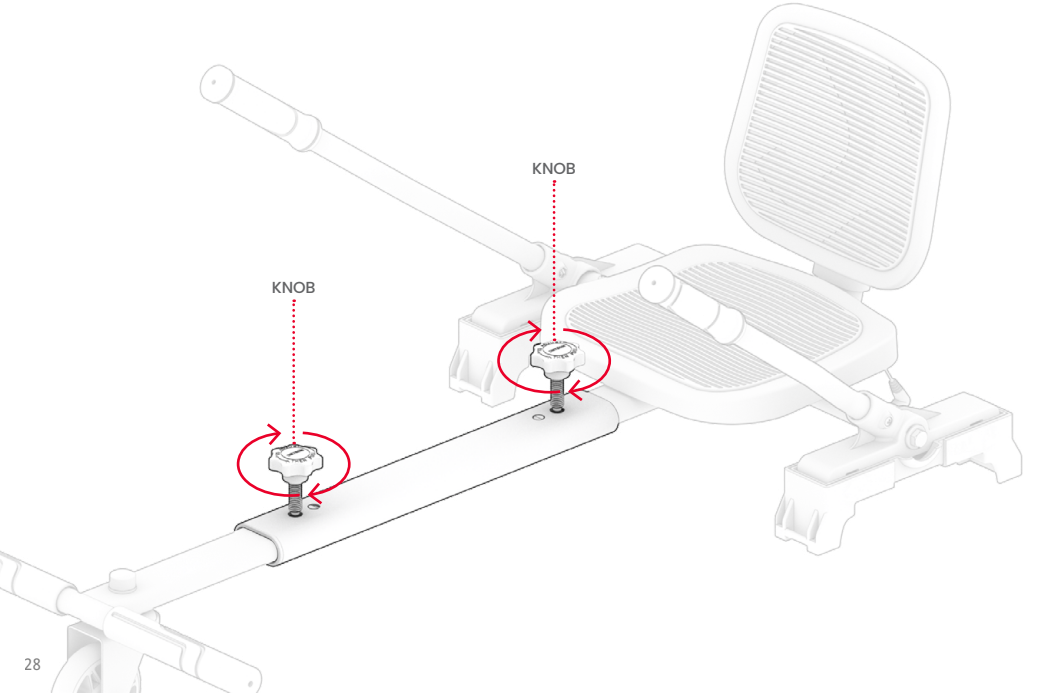

2.7 Attaching the JetKart® to the Hoverboard

⚠ **IMPORTANT:** POWER OFF YOUR HOVERBOARD BEFORE ATTACHING THE JETKART® TO IT.

1. PLACE YOUR JETKART® ON THE GROUND AND PLACE YOUR HOVERBOARD BEHIND IT SO THAT THE SIDE OF THE HOVERBOARD WITH THE POWER BUTTON IS VISIBLE FROM THE BACK OF THE JETKART®.
2. IF NECESSARY, ROTATE THE FOOTPADS ON THE HOVERBOARD SO THAT THEY ARE ALIGNED WITH ONE ANOTHER AND PARALLEL TO THE GROUND.
3. LIFT THE BACK OF THE JETKART® FRAME AND ROLL THE JETKART® TOWARDS THE HOVERBOARD. PLACE THE FRAME ONTO THE HOVERBOARD SO THAT:
   - EACH JETKART® BRACKET IS SITUATED ON ONE SIDE OF THE HOVERBOARD.
   - THE FEET OF EACH BRACKET ARE WRAPPED AROUND THE FRONT AND BACK EDGES OF THE HOVERBOARD.
   - THE CENTER OF EACH BRACKET IS RESTING ON THE HOVERBOARD FOOTPADS.

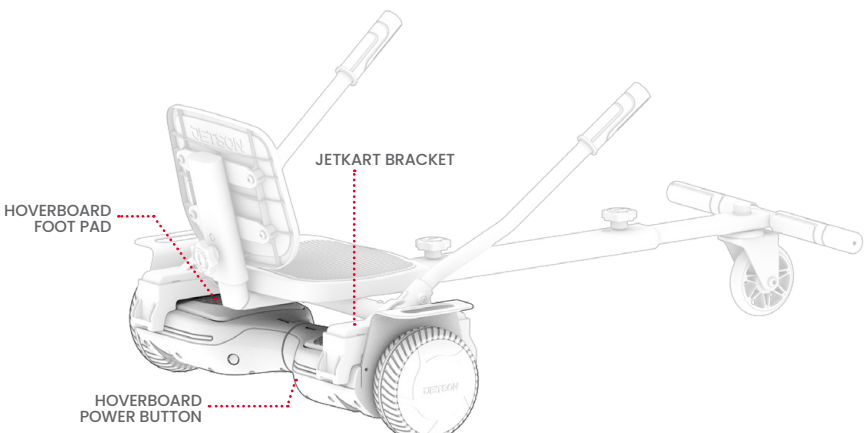

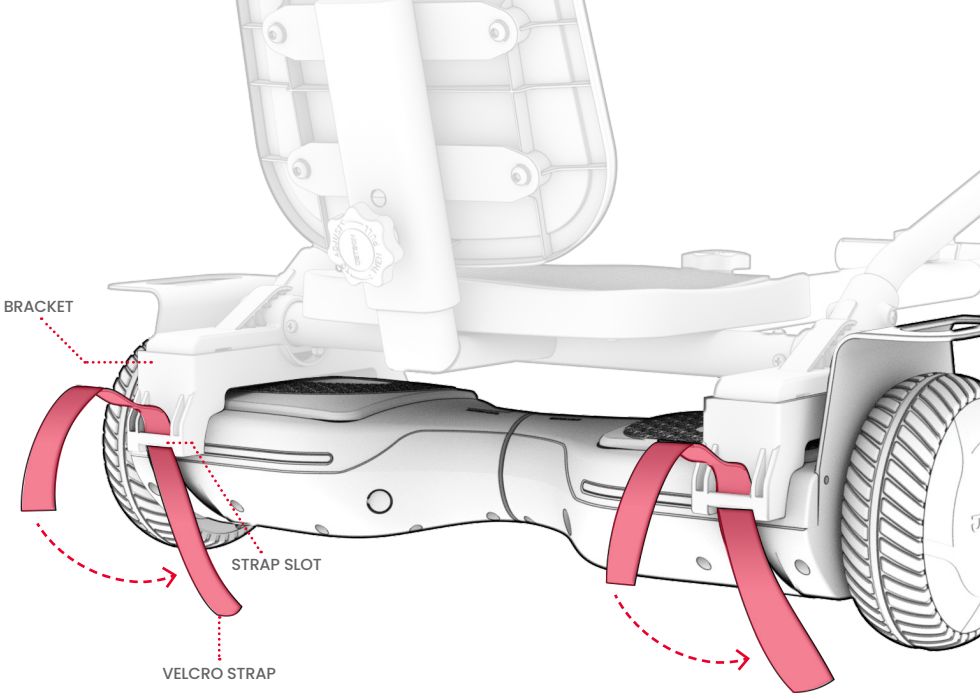

4. SLIDE A VELCRO STRAP THROUGH THE SLOT ON THE REAR OF EACH BRACKET.
5. PULL THE STRAPS TIGHT AND FOLD THE ENDS OF THE STRAPS OVER.

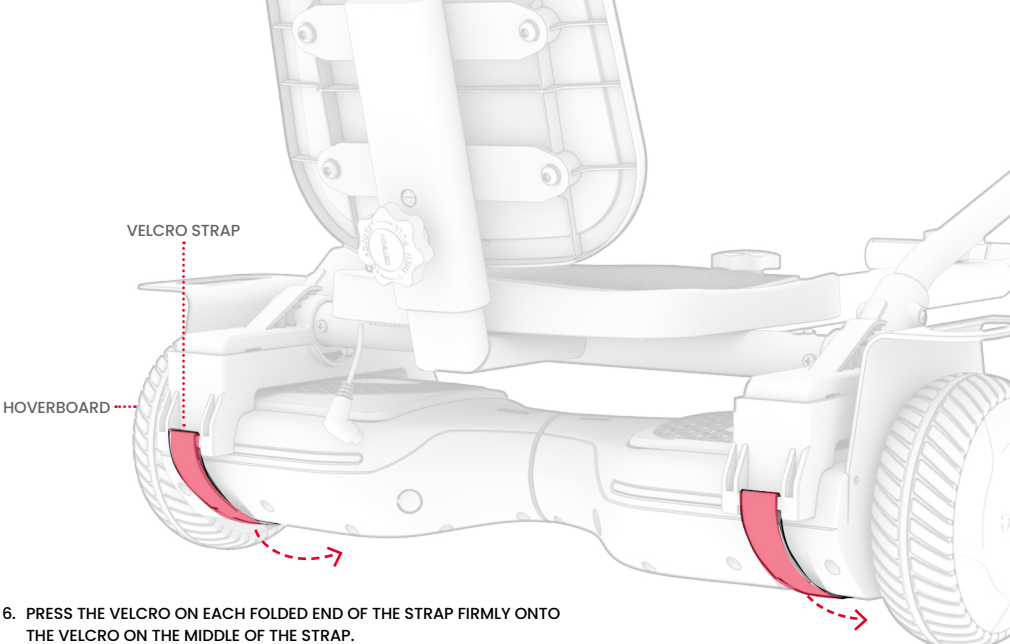

6. PRESS THE VELCRO ON EACH FOLDED END OF THE STRAP FIRMLY ONTO THE VELCRO ON THE MIDDLE OF THE STRAP.
7. WRAP THE LOOSE END OF EACH STRAP UNDER THE HOVERBOARD AND UP THROUGH THE SLOTS ON THE FRONT OF THE BRACKETS.
8. REPEAT STEPS 4 – 6 WITH THE LOOSE END ENDS OF THE STRAPS IN THE SLOTS ON THE FRONT OF THE BRACKETS.
   ⚠ **IMPORTANT:** ENSURE THAT THE STRAPS ARE TAUT.
9. CHECK THAT THE JETKART® IS SECURELY ATTACHED TO THE HOVERBOARD.

2.8 Connecting the Seat Lights to the Power Source

ENSURE THAT THE HOVERBOARD IS POWERED OFF (SECTION 2.11) PRIOR TO ATTACHING THE JETKART® TO IT.

1. PULL OPEN THE COVER ON THE HOVERBOARD CHARGING PORT.
2. PLUG THE SEAT LIGHT WIRE INTO THE CHARGING PORT OF THE HOVERBOARD.

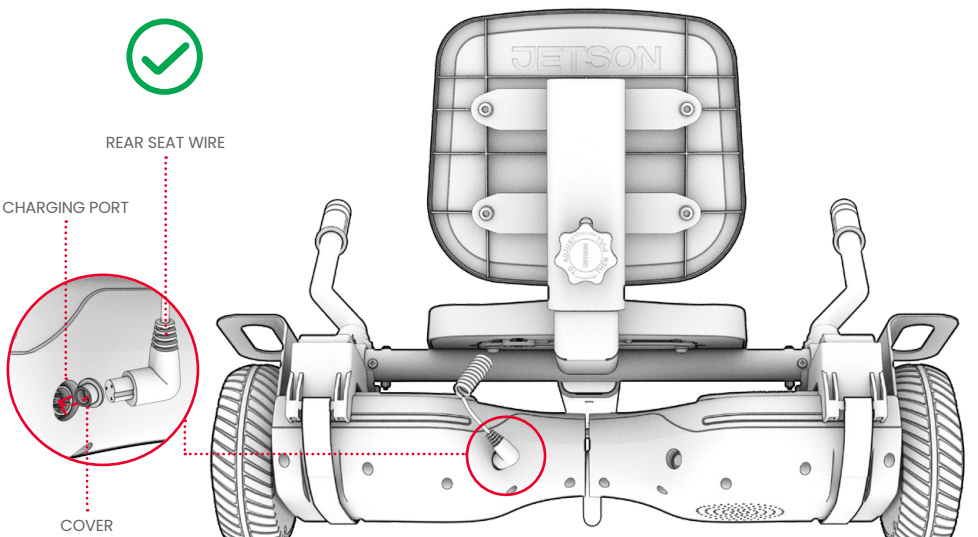

2.9 Adjusting the Length of the JetKart®

THE JETKART® CAN BE SIZED TO SUIT EACH RIDER. WHEN SEATED AND WITH FEET POSITIONED ON THE FOOTREST, A RIDER'S KNEES SHOULD BE SLIGHTLY BENT.

1. TWIST ONE OR BOTH KNOBS ON TOP OF THE CENTER CONNECTOR (B) COUNTERCLOCKWISE TO LOOSEN AND REMOVE. SET ASIDE.

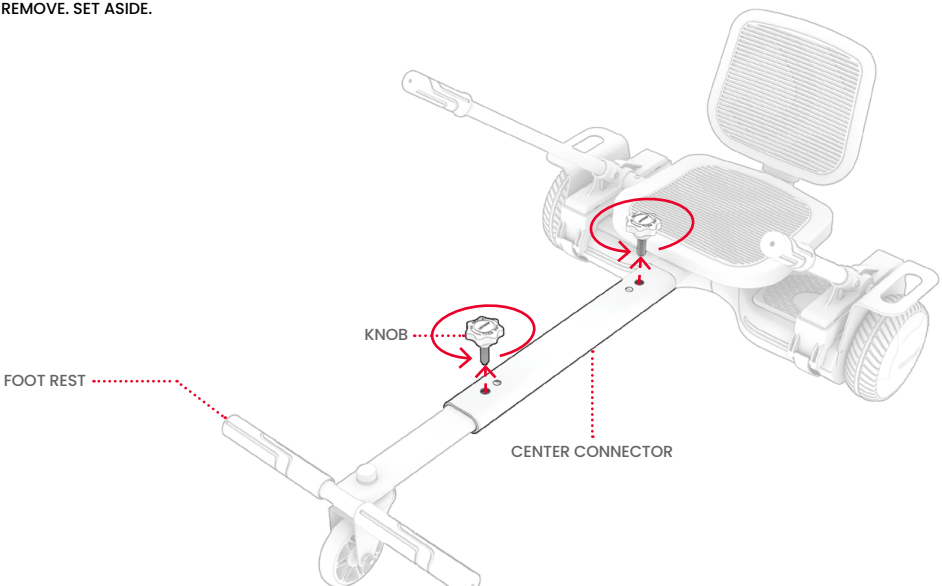

2. PUSH OR PULL TO SLIDE THE REAR FRAME (A) AND FRONT FRAME (C) IN THE CENTER CONNECTOR UNTIL THE HOLES ON TOP OF THE CENTER CONNECTOR ARE ALIGNED WITH NEW SIZING HOLES ON BOTH PARTS OF THE FRAME.

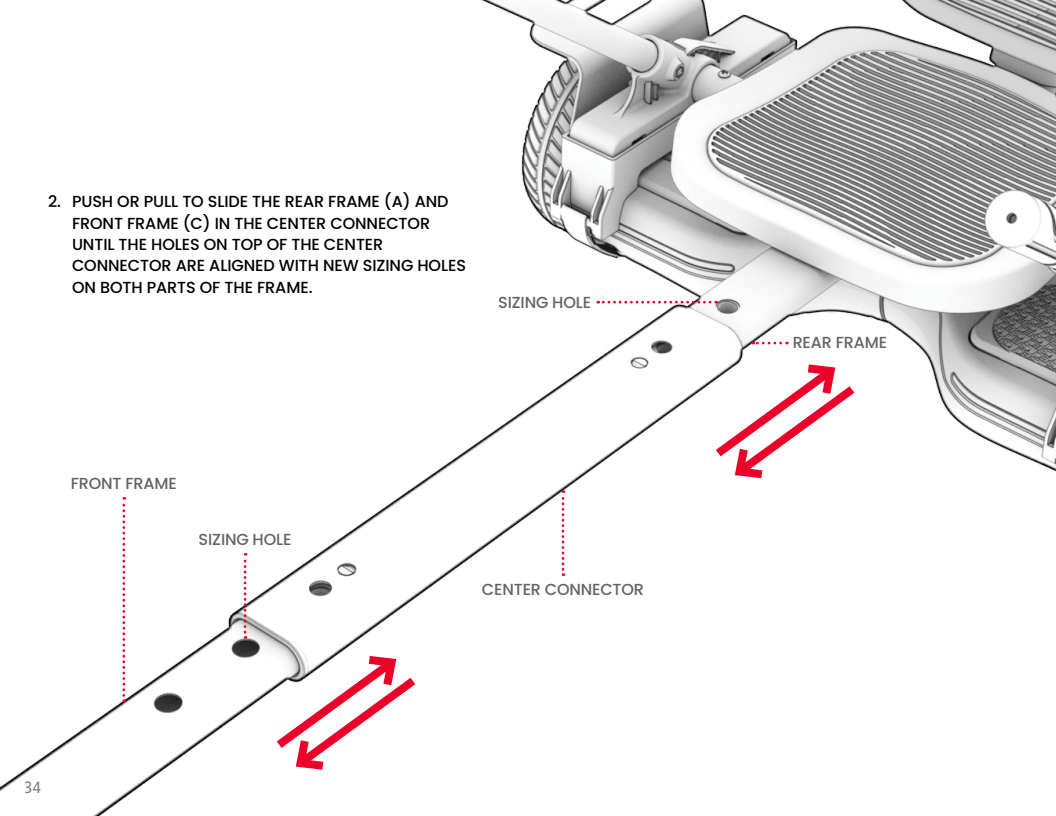

3. RE-INSERT EACH REMOVED KNOB INTO THE ALIGNED HOLES. APPLY A SLIGHT DOWNWARD PRESSURE ON THE EACH KNOB AND TWIST CLOCKWISE UNTIL IT IS FULLY INSERTED.
4. CHECK THAT THE FRAME IS SECURE.

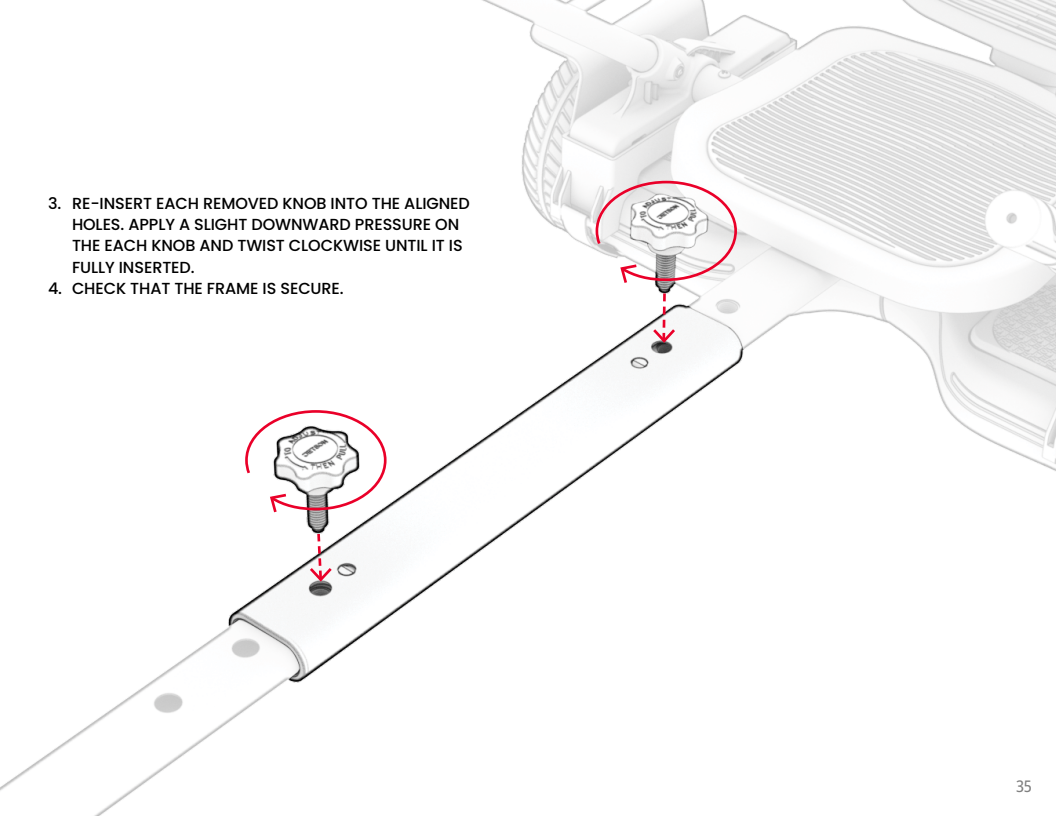

2.10 Adjusting the Height of the Seat Back

THE SEAT BACK CAN BE SET AT TWO POSITIONS: HIGH AND LOW.

1. REMOVE THE KNOB FROM THE SEAT BACK STEM BY TWISTING IT OUT COUNTERCLOCKWISE.

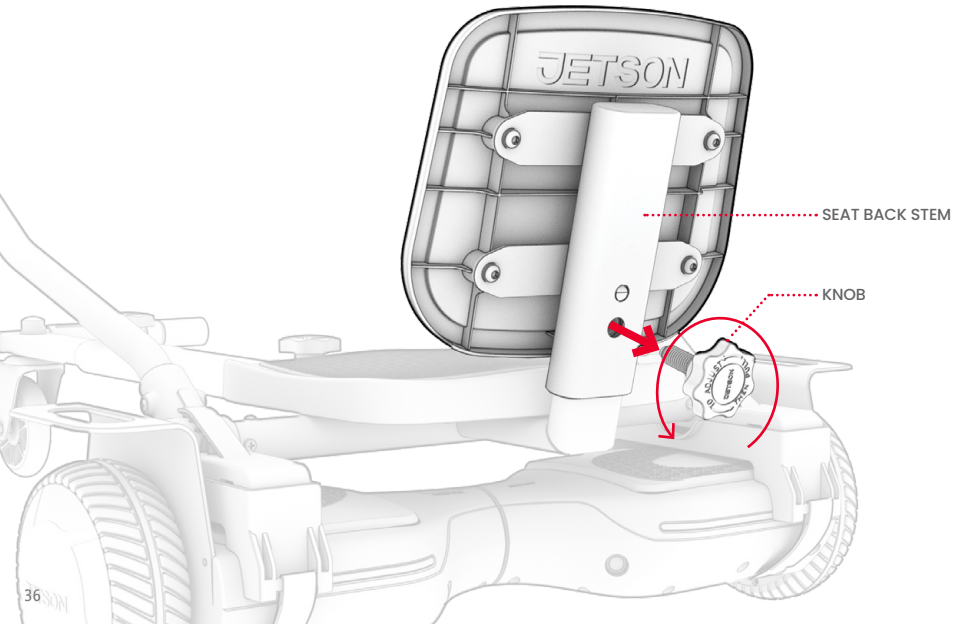

2. RAISE OR LOWER THE SEAT BACK UNTIL THE HOLE IN THE SEAT BACK STEM IS ALIGNED WITH THE OTHER SIZING HOLE ON THE REAR SIDE OF THE SEAT BACK SUPPORT.

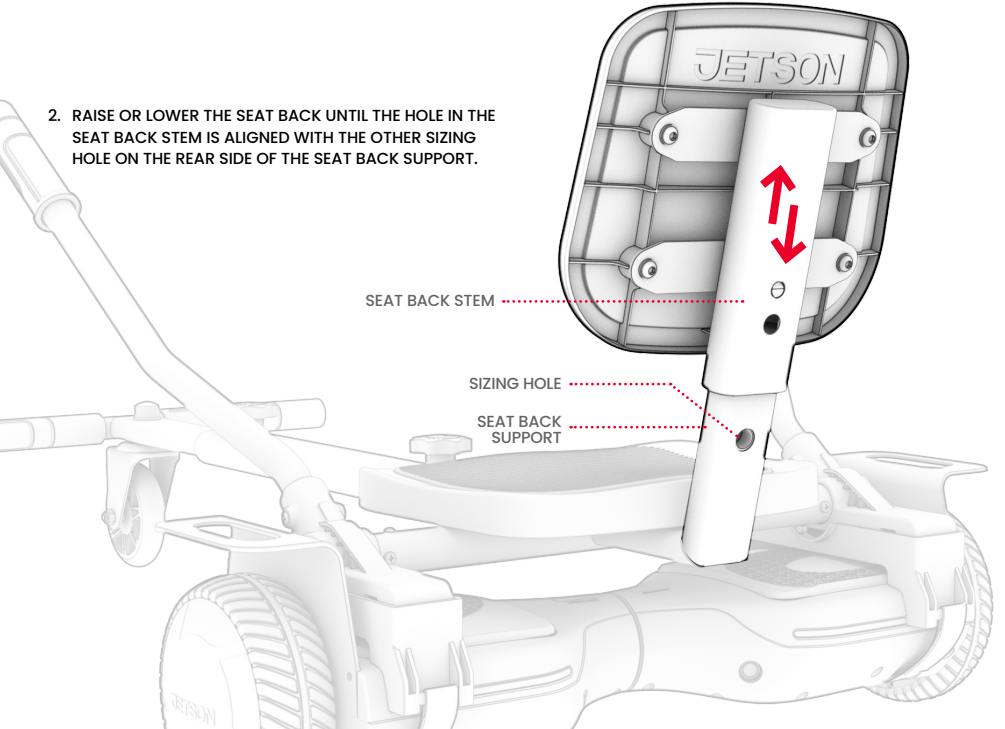

3. RE-INSERT THE KNOB INTO THE ALIGNED HOLES BY TWISTING IT IN CLOCKWISE.
4. CHECK THAT THE SEAT BACK IS SECURE.

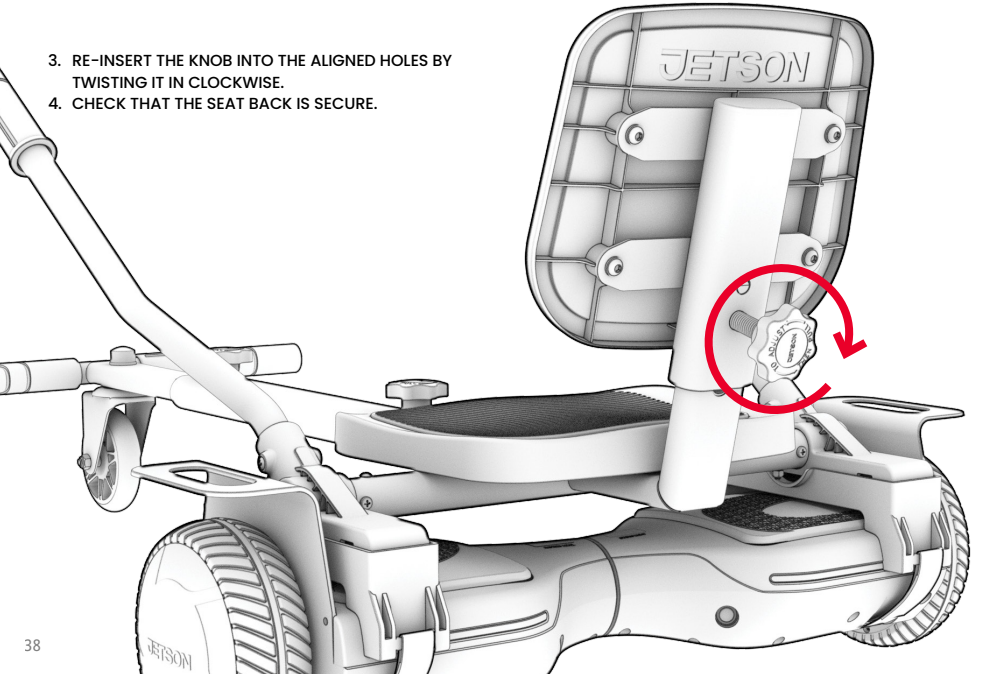

2.11 Powering On & Off

THE HOVERBOARD PROPELS THE JETKART® FORWARD AND PROVIDES POWER FOR THE JETKART'S LIGHTS.

- **TO TURN ON THE HOVERBOARD:** QUICK-PRESS THE POWER BUTTON. YOU WILL HEAR THE ANNOUNCEMENT "POWER ON."
- **TO TURN OFF THE HOVERBOARD:** PRESS AND HOLD THE POWER BUTTON FOR ABOUT 3 SECONDS. YOU WILL HEAR THE ANNOUNCEMENT "POWERED OFF."

2.12 Recalibrating the Hoverboard

SOMETIMES THE INTERNAL BALANCE MECHANISMS ON A HOVERBOARD NEED TO BE RESET, OR "RECALIBRATED." ALWAYS REMOVE THE KART FROM THE HOVERBOARD TO RECALIBRATE.

IMPORTANT: RECALIBRATE YOUR HOVERBOARD STRAIGHT OUT OF THE BOX. THEN, RECALIBRATE AS NECESSARY. SIGNS YOUR HOVERBOARD MIGHT NEED RECALIBRATING INCLUDE A RED STATUS INDICATOR LIGHT (SEE SECTION 3.1), CONSTANT BEEPING, AND/OR SPINNING OF THE WHEELS.

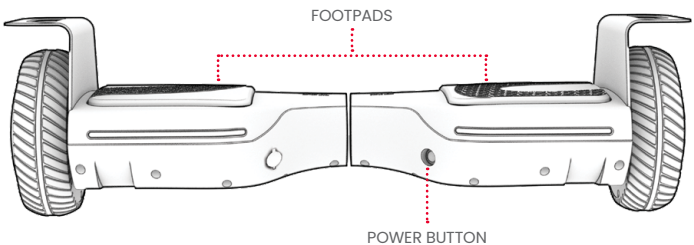

TO RECALIBRATE:

1. POWER OFF YOUR HOVERBOARD.
2. PLACE YOUR HOVERBOARD ON A FLAT SURFACE AND LEVEL THE FOOTPADS SO THEY ARE EVENLY ALIGNED AND PARALLEL TO THE GROUND.
3. PRESS AND HOLD THE POWER BUTTON FOR ABOUT 5 SECONDS, AND YOU WILL HEAR THE START OF A MUSICAL TUNE.
4. CONTINUE TO HOLD THE BUTTON UNTIL YOU HEAR THE WORDS "CALIBRATION SUCCESSFUL."
5. RELEASE THE POWER BUTTON, AND THEN QUICK-PRESS IT TO POWER OFF THE HOVERBOARD.
6. QUICK-PRESS THE POWER BUTTON AGAIN TO TURN THE HOVERBOARD BACK ON. RECALIBRATION IS NOW COMPLETE.

IMPORTANT: DO NOT LEAN OR APPLY ANY WEIGHT ON THE HOVERBOARD DURING THE RECALIBRATION PROCESS.

NOTE: IT MAY TAKE A FEW RECALIBRATION ATTEMPTS TO FULLY RESET THE HOVERBOARD'S INTERNAL BALANCE MECHANISMS.

3. Features & Functions

3.1 Understanding the Hoverboard Indicator Lights

STATUS INDICATOR LIGHT		
STATUS	READY TO RIDE.	RECALIBRATE YOUR HOVERBOARD. (SEE SECTION 2.12)

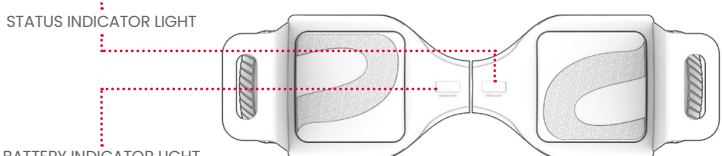

BATTERY INDICATOR LIGHT				 PLUS CONTINUOUS BEEPING AND LOW BATTERY ANNOUNCEMENT FROM THE SPEAKER
CHARGE PERCENTAGE	66-100%	33-65%	5-32% (TIME TO CHARGE YOUR HOVERBOARD!)	0-15% (CHARGE YOUR HOVERBOARD NOW!)

NOTE: SEE SECTION 2.2 FOR INFORMATION ABOUT THE BATTERY INDICATOR LIGHTS DURING THE CHARGING PROCESS.

IMPORTANT: WHEN THE BATTERY CHARGE DEPLETES TO 0%, THE HOVERBOARD WILL POWER OFF. CHARGE THE HOVERBOARD TO FULL POWER (SEE SECTION 2.2) PRIOR TO YOUR NEXT RIDE.

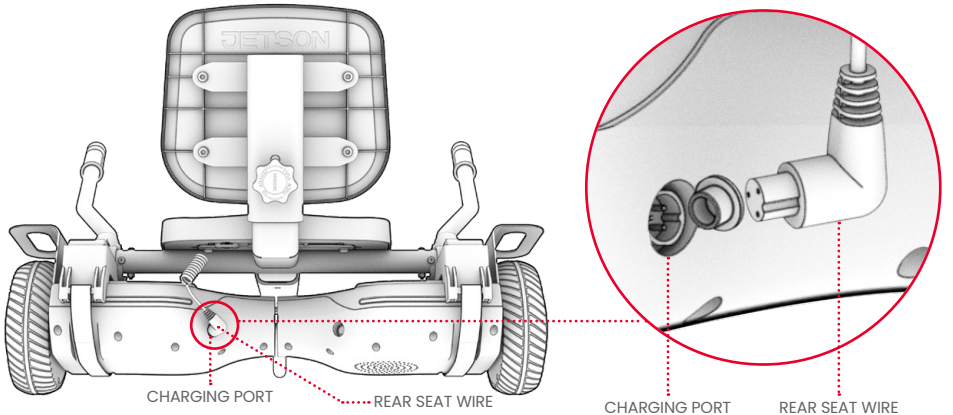

3.2 Using the Lights

THE LIGHTS ON THE KART SEAT DRAW POWER FROM THE HOVERBOARD. ALL LIGHTS WILL ACTIVATE WHEN THE SEAT LIGHT WIRE IS PLUGGED INTO THE HOVERBOARD (SECTION 2.8).

THERE ARE 5 DIFFERENT LIGHTING EFFECTS THAT YOU CAN CHOOSE FROM.

- TO TOGGLE AMONGST THE 5 DIFFERENT LIGHTING EFFECTS, QUICK-PRESS THE HOVERBOARD POWER BUTTON WHILE IT IS POWERED ON.
- THE LIGHTS WILL PULSE IN SYNC WITH THE BEAT OF MUSIC THAT YOU HAVE STREAMING FROM THE BLUETOOTH® SPEAKER. (SECTION 2.3)

⚠ **IMPORTANT: ALWAYS RIDE THE KART WITH THE SEAT LIGHT WIRE PLUGGED INTO THE HOVERBOARD. NEVER RIDE WITH ANY WIRES DANGLING FROM THE FRAME.**

3.3 Using the Bluetooth® Speaker

THE HOVERBOARD COMES EQUIPPED WITH A BLUETOOTH® SPEAKER.

TO CONNECT YOUR HANDHELD DEVICE TO THE BLUETOOTH® SPEAKER:

1. POWER ON THE HOVERBOARD (SECTION 2.11)
2. IN THE SETTINGS SECTION ON YOUR HANDHELD DEVICE, ENABLE BLUETOOTH® AND LOOK FOR "FADE" IN THE LIST OF OPTIONS. SELECT IT.
3. PLAY MUSIC THROUGH YOUR FAVORITE APP, AND IT WILL STREAM THROUGH THE HOVERBOARD'S SPEAKERS.

TROUBLESHOOTING CONNECTIVITY ISSUES

IF YOU ARE HAVING TROUBLE CONNECTING WITH THE SPEAKER, TRY:

1. POWERING THE HOVERBOARD OFF AND THEN BACK ON. (SEE SECTION 2.11)
2. POWERING YOUR PERSONAL HANDHELD DEVICE OFF AND THEN BACK ON.
3. CLICKING THE SCAN BUTTON IN THE BLUETOOTH SETTINGS SECTION OF YOUR HANDHELD DEVICE TO REFRESH THE LIST OF DETECTED PRODUCTS.

THE BLUETOOTH® WORD MARK AND LOGOS ARE REGISTERED TRADEMARKS OWNED BY THE BLUETOOTH SIG, INC. AND ANY USE OF SUCH MARKS BY JETSON ELECTRIC BIKE LLC. IS UNDER LICENSE. OTHER TRADEMARKS AND TRADE NAMES ARE THOSE OF THEIR RESPECTIVE OWNERS.

4. Making Moves

TWO WAYS TO RIDE! RIDE WITH THE KART ON THE HOVERBOARD FOR AN ELECTRIC GO-KART EXPERIENCE, OR REMOVE THE KART AND TAKE THE HOVERBOARD FOR A SPIN ON ITS OWN.

4.1 Getting on the JetKart®

1. PLACE THE JETKART® ON A FLAT SURFACE WITH THE HOVERBOARD TURNED OFF.
2. POSITION THE HANDLES SO THAT THEY ARE IN THE NEUTRAL POSITION. CAREFULLY SIT ON THE JETKART® AND THEN PLACE YOUR FEET ON THE FOOTREST.
3. MAKE SURE THE HOVERBOARD IS LEVELED AND, IF NECESSARY, REACH DOWN AND ROTATE THE HOVERBOARD'S FOOTPADS SO THEY ARE EVENLY ALIGNED AND PARALLEL TO THE GROUND.
4. TURN ON THE HOVERBOARD.

IMPORTANT: DO NOT TURN ON THE HOVERBOARD BEFORE YOU SIT DOWN. IF THE HOVERBOARD IS POWERED ON BUT NOT LEVELED WHEN YOU TURN IT ON, THE HOVERBOARD WILL PROPEL THE JETKART® FORWARD OR BACKWARD IMMEDIATELY.

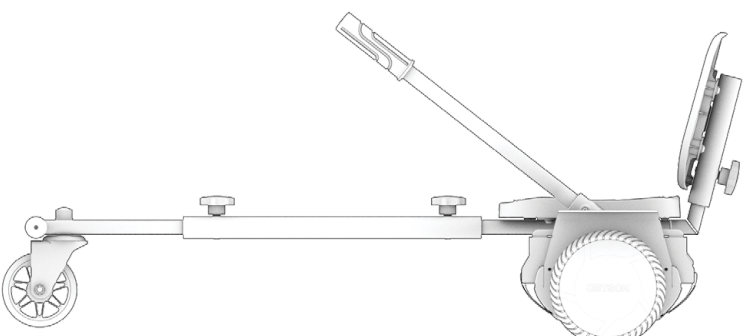

4.2 Riding the JetKart®

⚠ **IMPORTANT: TIGHTEN ALL BOLTS, NUTS, AND KNOBS BEFORE EACH RIDE.**

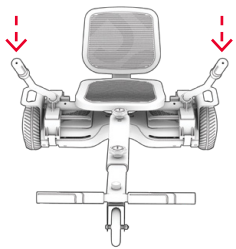

TO GO FORWARD – PUSH DOWN BOTH HANDLES

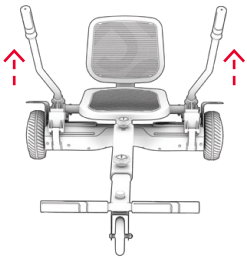

TO BRAKE/REVERSE – PULL UP BOTH HANDLES

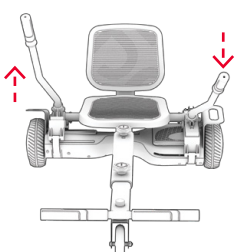

TO TURN RIGHT – PUSH DOWN LEFT HANDLE AND PULL UP RIGHT HANDLE

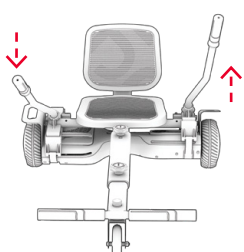

TO TURN LEFT – PULL UP LEFT HANDLE AND PUSH DOWN RIGHT HANDLE

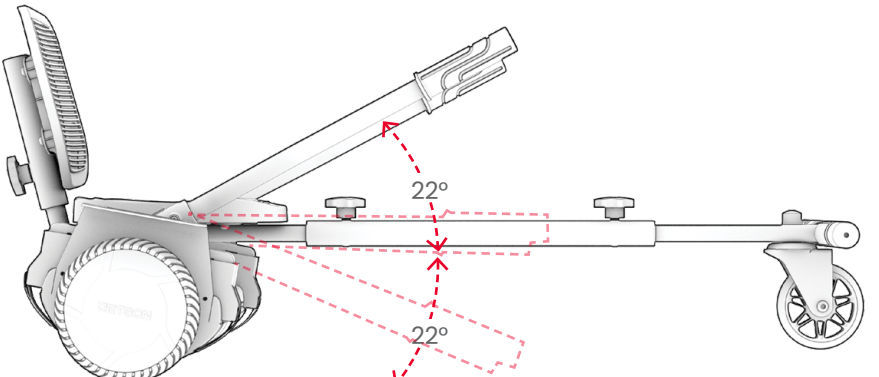

⚠ **IMPORTANT: DO NOT PULL UP OR DOWN TOO HARD ON THE HANDLES. PULLING OR PUSHING BEYOND THE 22° THRESHOLD FROM THE NEUTRAL POSITION MAY CAUSE:**

- **OVER-EXTENSION OF THE BRACKET MECHANISM, CAUSING DAMAGE THAT LOCKS THE BRACKETS IN A NON-FUNCTIONAL POSITION.**
- **OVER-TILTING OF THE HOVERBOARD, LEADING TO SURFACE DRAG THAT COULD RESULT IN SCRATCHES TO THE FRAME AND/OR TEARING OF THE VELCRO ATTACHMENT STRAPS.**

4.3 Riding the Hoverboard on its Own

IMPORTANT: AS A SAFETY INDICATOR AND A WARNING TO SLOW DOWN, THE HOVERBOARD WILL BEEP CONTINUOUSLY WHEN IT IS BEING RIDDEN WITHOUT THE KART ATTACHED AT ITS MAXIMUM SPEED.

MOUNTING THE HOVERBOARD

1. POSITION IT ON THE GROUND IN FRONT OF YOU AND PLACE ONE FOOT IN THE CENTER OF THE FOOTPAD IN FRONT OF IT.
2. POWER ON YOUR HOVERBOARD.
3. LIFT YOUR OTHER FOOT ONTO THE OTHER FOOTPAD, AND QUICKLY SHIFT YOUR WEIGHT TO THE CENTER OF YOUR BODY.
4. STAND STRAIGHT, KEEPING A SLIGHT BEND IN THE KNEES.

MOVING THE HOVERBOARD

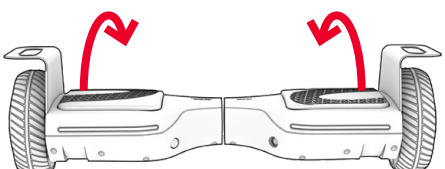

TO MOVE FORWARD: APPLY EQUAL PRESSURE TO THE FRONT OF EACH FOOTPAD WITH YOUR TOES.

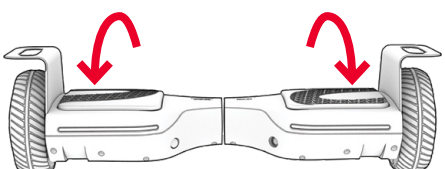

TO MOVE BACKWARDS: APPLY EQUAL PRESSURE TO THE BACK OF EACH FOOTPAD WITH YOUR HEELS.

TURNING THE HOVERBOARD

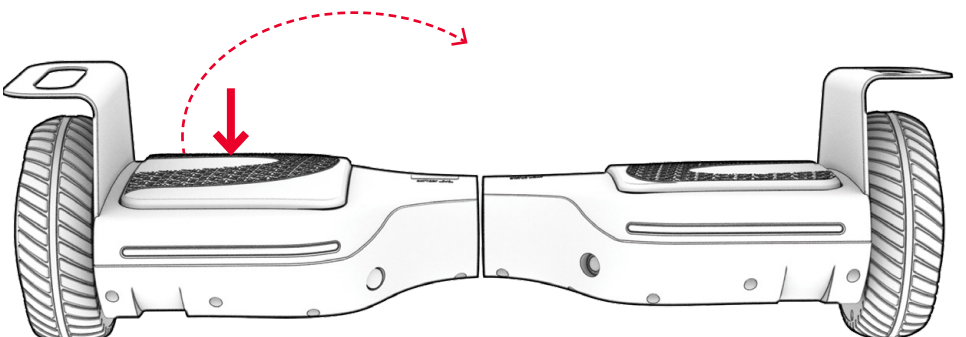

TO TURN RIGHT: ROTATE YOUR HIPS TO THE RIGHT AND APPLY EXTRA PRESSURE TO THE FRONT OF THE LEFT FOOTPAD WITH THE TOES ON YOUR LEFT FOOT.

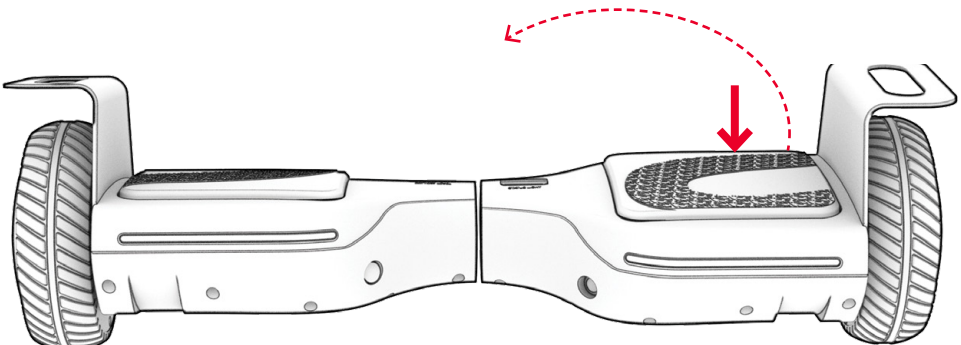

TO TURN LEFT: ROTATE YOUR HIPS TO THE LEFT AND APPLY EXTRA PRESSURE TO THE FRONT OF THE RIGHT FOOTPAD WITH YOUR RIGHT FOOT.

SLOWING DOWN & STOPPING

TO SLOW DOWN WHILE RIDING FORWARDS, EASE UP ON THE PRESSURE BEING APPLIED TO THE FRONT OF THE FOOTPADS. BRING YOUR BODY WEIGHT OVER THE CENTER OF EACH FOOTPAD TO COME TO A STOP.

DISMOUNTING THE HOVERBOARD

ONCE THE BOARD HAS COME TO A STOP, DISMOUNT IT BY STEPPING OFF BEHIND IT ONE FOOT AT A TIME.

⚠ **IMPORTANT: FOR SAFETY, NEVER DISMOUNT THE HOVERBOARD BY STEPPING OFF IN FRONT OF IT.**

4.4 Maximizing Speed & Run Time

THE MAXIMUM SPEED AND RUN TIME ARE APPROXIMATELY 9 MPH AND 60 MINUTES WHEN THE CARRYING WEIGHT IS UP TO 135 LBS, AND 6 MPH AND 30 MINUTES WHEN THE CARRYING WEIGHT IS ABOVE 135 LBS. HOWEVER, MANY FACTORS WILL AFFECT HOW FAST AND LONG YOU CAN RIDE.

- **RIDING SURFACE:** A SMOOTH, FLAT SURFACE WILL INCREASE SPEED AND RUN TIME.
- **WEIGHT:** MORE WEIGHT CAN REDUCE SPEED AND RUN TIME.
- **TEMPERATURE:** RIDE, STORE, AND CHARGE THE CRUSH ABOVE 50ºF.
- **MAINTENANCE:** TIMELY BATTERY CHARGING OF UP TO 5 HOURS PER CHARGE WILL INCREASE ACHIEVABLE RUN TIME.
- **RIDING STYLE:** FREQUENT STARTING AND STOPPING WILL REDUCE ACHIEVABLE RIDING RUN TIME.

5. Safe & Smooth Journeying

5.1 Helmet Safety

A HELMET SHOULD BE WORN BY THE RIDER AT ALL TIMES.



PROPER POSITIONING:
THE FOREHEAD IS COVERED
BY THE HELMET.



IMPROPER POSITIONING:
THE FOREHEAD IS EXPOSED.
A FALL COULD RESULT IN SERIOUS INJURY.

*** WEAR A HELMET, APPROPRIATE CLOTHING, SHOES, AND SAFETY GEAR. AVOID CLOTHING THAT CAN GET CAUGHT INTO OR UNDER THE WHEELS. CLOSED-TOE, FLAT SHOES ARE RECOMMENDED. WEAR AN ASTM F1492 APPROVED HELMET AND PROTECTIVE GEAR TO PREVENT INJURY IN THE EVENT OF AN ACCIDENT.**

5.2 Hoverboard Motor Care

⚠ **IMPORTANT: WHEN THE HOVERBOARD IS PUSHED BEYOND ITS INTENDED CAPACITY, THE MOTORS ARE SUSCEPTIBLE TO OVERLOADING. IF APPROACHING MOTOR OVERLOAD, THE HOVERBOARD MAY START BEEPING AS AN ALERT, AND ONE OR BOTH SIDES OF THE HOVERBOARD MAY ENTER PROTECTION MODE AND AUTOMATICALLY POWER OFF.**

IN CASES OF OVERLOAD, LET THE MOTOR COOL OFF FOR 30 - 60 MINUTES BEFORE RIDING AGAIN.

TO AVOID OVERLOADING THE MOTOR, REFRAIN FROM RIDING:

- ON HIGH-RESISTANCE SURFACES SUCH AS CARPET OR ROUGH, ROCKY TERRAIN.
- UP STEEP SLOPES.
- WITH A CARRYING WEIGHT EXCEEDING 220 LB.
- OVER BUMPS, STEPS/CURBS, OR UNEVEN GROUND.

5.3 Product Care & Maintenance

CLEANING THE JETKART AND HOVERBOARD

- TO CLEAN THE PRODUCT, CAREFULLY WIPE WITH A DAMP CLOTH, THEN DRY WITH A DRY CLOTH.
- DO NOT SPRAY OR APPLY WATER DIRECTLY TO THE PRODUCT, AS THE ELECTRICAL AND ELECTRONIC SYSTEMS MAY GET WET, WHICH COULD RESULT IN A MALFUNCTION THAT COULD LEAD TO PERSONAL INJURY.
- IF THE ELECTRIC PARTS OR BATTERY GET WET, DO NOT POWER ON THE HOVERBOARD. CONTACT THE JETSON CARE TEAM FOR ASSISTANCE.

CARING FOR THE HOVERBOARD BATTERY

- KEEP AWAY FROM FIRE AND EXCESSIVE HEAT.
- AVOID INTENSE PHYSICAL SHOCK, SEVERE VIBRATION, OR IMPACT.
- PROTECT FROM WATER OR MOISTURE.
- DO NOT DISASSEMBLE THE HOVERBOARD OR ITS BATTERY.
- CONTACT THE JETSON CARE TEAM IF THERE ARE ANY ISSUES WITH THE BATTERY.

STORING THE JETKART AND HOVERBOARD

- FULLY CHARGE THE HOVERBOARD BATTERY BEFORE STORING. THE BATTERY SHOULD BE FULLY CHARGED ONCE A MONTH WHILE IN STORAGE.
- STORE INDOORS IN A DRY PLACE.
- COVER THE FADE TO PROTECT IT FROM DUST.

5.4 Hoverboard Troubleshooting

PROBLEM	POSSIBLE CAUSE	SECONDARY SIGNS TO LOOK FOR	SOLUTION
THE HOVERBOARD IS BEEPING ONLY WHEN I AM RIDING. (CONT.)	THE MOTORS ARE BEING OVERWORKED.		POWER OFF THE HOVERBOARD FOR 30 MINUTES TO LET THE MOTORS COOL OFF. IF THE BEEPING CONTINUES, REPEAT FOR ANOTHER 30 MINUTES.
	THE UNIT IS TILTED TOO FAR FORWARD.		MOVE TO A FLAT RIDING SURFACE OR SHIFT YOUR WEIGHT SO THAT THE FOOTPADS ARE HORIZONTAL.
	THE WHEELS ARE BLOCKED.	• DEBRIS IN THE WHEEL AREA. • AN OBSTRUCTION IN FRONT OF THE WHEEL.	POWER OFF THE HOVERBOARD AND REMOVE ANY INTERFERING DEBRIS. RELOCATE TO A RIDING AREA WITHOUT UNEVEN, ROCKY, LOOSE, OR BUMPY TERRAIN.
	THE INTERNAL BALANCE MECHANISM NEEDS RESETTING.	• THE STATUS INDICATOR LIGHT(S) ARE ILLUMINATED TO INDICATE A STATUS ISSUE. (SECTION 3.1) • THE WHEELS ARE SPINNING.	RECALIBRATE THE HOVERBOARD. (SECTION 2.12)

FOR ADDITIONAL TROUBLESHOOTING SUPPORT, CONTACT THE JETSON CARE TEAM AT RIDEJETSON.COM/CHAT

PROBLEM	POSSIBLE CAUSE	SECONDARY SIGNS TO LOOK FOR	SOLUTION
THE HOVERBOARD IS BEEPING ONLY WHEN I AM RIDING.	THE UNIT IS BEING PUSHED BEYOND ITS INTENDED PERFORMANCE CAPACITY. YOU MAY BE RIDING BEYOND ITS MAXIMUM SPEED, ON TOO STEEP AN ANGLE, ON ROUGH/HIGH-RESISTANCE TERRAIN, OR WITH A CARRYING WEIGHT BEYOND ITS RECOMMENDED CAPACITY.		SLOW YOUR RIDING SPEED, MOVE TO A SMOOTH, FLAT SURFACE, AND ENSURE THAT THE CARRYING WEIGHT DOES NOT EXCEED 220 LB.
THE HOVERBOARD IS BEEPING ALL THE TIME, EVEN WHEN I AM NOT RIDING IT.	BATTERY CHARGE IS LOW.	• THERE IS A LOW BATTERY ANNOUNCEMENT COMING FROM THE SPEAKER. • BATTERY INDICATOR LIGHT(S) SHOW THAT THE CHARGE LEVEL IS LOW. (SECTION 3.1)	RECHARGE THE HOVERBOARD. (SECTION 2.2)
	THE INTERNAL BALANCE MECHANISM NEEDS RESETTING.	• THE STATUS INDICATOR LIGHT(S) ARE ILLUMINATED TO INDICATE A STATUS ISSUE. (SECTION 3.1) • THE WHEELS ARE SPINNING.	RECALIBRATE THE HOVERBOARD. (SECTION 2.12)
THE HOVERBOARD IS SLOWING DOWN OR TILTING WHILE I RIDE.	BATTERY CHARGE HAS DROPPED BELOW 10%.	• THE BATTERY INDICATOR LIGHT(S) ARE SHOWING A LOW CHARGE. (SECTION 3.1)	RECHARGE THE HOVERBOARD. (SECTION 2.2)

FOR ADDITIONAL TROUBLESHOOTING SUPPORT, CONTACT THE JETSON CARE TEAM AT RIDEJETSON.COM/CHAT

PROBLEM	POSSIBLE CAUSE	SECONDARY SIGNS TO LOOK FOR	SOLUTION
THE HOVERBOARD IS NOT ACHIEVING MAXIMUM SPEED OR RUN TIME.	FUNCTIONALITY IS BEING COMPROMISED BY CERTAIN RIDING CONDITIONS, SUCH AS ROUGH/HIGH-RESISTANCE TERRAIN, EXTREME AIR TEMPERATURES, OR CARRYING WEIGHT THAT EXCEEDS THE RECOMMENDED MAXIMUM OF 220 LB.		RIDE IN CONDITIONS THAT HELP MAXIMIZE FUNCTIONALITY. (SECTION 4.4)
THE WHEELS ARE SPINNING.	THE INTERNAL BALANCE MECHANISM NEEDS RESETTING.	• THE STATUS INDICATOR LIGHT(S) ARE ILLUMINATED TO INDICATE A STATUS ISSUE. (SECTION 3.1) THE UNIT IS BEEPING.	RECALIBRATE THE HOVERBOARD. (SECTION 2.12)
THE HOVERBOARD WILL NOT POWER ON.	THE BATTERY HAS NO CHARGE.		RECHARGE THE HOVERBOARD. (SECTION 2.2)
	THE CHARGER IS NOT WORKING.	• THE INDICATOR LIGHT ON THE CHARGER DOES NOT ILLUMINATE PROPERLY DURING ACTIVE CHARGING. (SECTION 2.2)	REPLACE THE CHARGER. (VISIT RIDEJETSON.COM/CHARGERS)

FOR ADDITIONAL TROUBLESHOOTING SUPPORT, CONTACT THE JETSON CARE TEAM AT RIDEJETSON.COM/CHAT

General Guidance for Safe Use and Maintenance of Fun-Karts

1.1 Fun-karts shall not be modified from the manufacturer's original design and configuration.
1.2 Fun-karts shall not be operated to perform racing, stunt riding, jumps, spin-outs, donuts, or other maneuvers, which may cause loss of control, or may cause uncontrolled operator/ passenger or kart actions or reactions, as such activities are likely to result in possible injury to the operator or passenger, or bystanders, or a combination thereof.
1.3 Fun-kart engines shall not be started unless the operator and any passenger (in a two-seat kart) are seated in the proper position for vehicle operations with the operator's hands on the steering wheel, and the brake fully engaged.
1.4 Fun-karts shall not be operated with any modifications to the kart or its components.
1.5 No person shall allow hands, feet, hair, body parts, clothing, or similar articles to come in contact with moving parts of the fun kart, wheels or drive train, while the engine is running.
1.6 Prior to each cycle of operation, a supervisor shall perform the preoperation checks specified by the manufacturer, and further verify:
1.6.1 Smooth throttle operation and positive return of the throttle linkage to a closed throttle position;
1.6.2 That the throttle stop operates properly and that the throttle cable or other linkages be adjusted properly;
1.6.3 That the steering linkage is adjusted and operates properly;
1.6.4 That the engine stop switch is properly functioning;
1.6.5 That all guards and pads originally supplied by the manufacturer are in proper place on the fun-kart and in serviceable condition;
1.6.6 That the area that the fun-kart is to be operated in is safe and suitable for fun-kart operation;
1.6.7 That engine idle speed is below the point of clutch engagement;
1.6.8 That brush bars, if provided, are mounted properly and intact;
1.6.9 That, on those fun-karts equipped with restraints, such restraints are in good condition, functioning properly, and used appropriately;
1.6.10 That the gas tank is in good condition and that the proper gas cap is fastened securely;
1.6.11 That the braking system on the fun-kart is functioning properly;
1.6.12 That all safety labels are in place and understood by the operator and any passenger (on fun-karts designed to carry an operator and a passenger);
1.6.13 That any and all axle guards, chain guards, torque converter covers, or other covers or guards supplied by the manufacturer are in place and in serviceable condition;
1.6.14 That tires are in good condition, inflated properly, and have sufficient tread remaining; and
1.6.15 That all fasteners are in place and tightened properly.
1.7 Fun-karts shall be fueled only by a supervisor knowledgeable with regard to proper refueling techniques as established by the fun kart's engine manufacturer's manual.
1.8 A supervisor shall verify personally that anyone operating or riding in a fun-kart (in two-seat fun-karts) is knowledgeable, capable, and has the cognitive capacity to operate the fun-kart safely, including those items specified in 1.1 through 1.6.15.
1.8.1 The supervisor only shall allow the use and operation of the fun-kart after a demonstration that such operators can understand and operate all components of the fun-kart prior to use.
1.8.2 The supervisor shall provide continuous supervision during fun-kart use.
1.9 Fun-kart operators and passengers (in two-seat karts) shall adhere to all manufacturer's recommendations and instructions, as well as comply with all laws and ordinances, as well as:
1.9.1 Operators shall stay seated with both hands on the steering wheel and both feet in the fun-kart at all times, whether moving or stationary, unless the fun-kart is stopped completely and the engine has been turned off,
1.9.2 Passengers (in two-seat karts) shall remain seated with arms and legs inside the fun-kart at all times during kart operations,
1.9.3 Shall observe maximum and minimum weight/height, or age restrictions, or a combination thereof,
1.9.4 Shall not allow anyone to ride in or operate fun-kart if hair, clothing, or other articles can extend past the fun-kart seat back or under the fun-kart's wheels,
1.9.5 Shall not allow smoking in fun-kart,
1.9.6 Persons under the influence of drugs, alcohol, or intoxicants shall not supervise, operate, or ride in a fun-kart,
1.9.7 Operators and passengers (in two-seat karts) shall comply with all fun-karting instructions, including those set out on warning labels attached to the fun-kart,
1.9.8 Fun karts shall operate only on surface or terrain as recommended by the fun-kart's manufacturer,

1.9.9 Fun-karts shall not be operated on roads, streets, highways, or at any other location where road vehicles are intended to travel, and
1.9.10 Fun-karts shall be operated only with adequate lighting and under conditions of suitable visibility.
1.10 Persons with the following conditions shall not ride in or operate a fun kart:
1.10.1 Those with heart conditions;
1.10.2 Pregnant women;
1.10.3 Persons with head, back, or neck ailments, or prior surgeries to those areas of the body;
1.10.4 Persons with any mental or physical conditions, which may make them susceptible to injury or impair their physical dexterity or mental capabilities to recognize, understand, and perform all of the safety instructions, and to be able to assume the hazards inherent in fun-kart use.
1.11 Fun-karts shall not be used to:
1.11.1 Transport a passenger except in a seating area provided by the manufacturer on two-seat karts;
1.11.2 Transport materials or equipment, unless otherwise specified by the manufacturer;
1.11.3 Transport animals.
1.12 Single-seat karts shall be used by the operator only.
1.13 No more than the operator and one passenger shall be allowed in fun-karts designed for two people, as specified by the manufacturer's instructions.
1.14 Fun-kart operators and passengers always shall use appropriate protective clothing, including but not limited to a helmet and eye protection, with appropriate certification, and any other equipment recommended by the fun-kart manufacturer.
1.15 No operator, passenger, or other person shall contact any portion of the engine, wheels, or drive train for any purpose including maintenance until the engine has been turned off and allowed to cool, and the fun-kart is in a stable and stationary position.
1.16 Where a manufacturer equips its fun-karts with restraints, the use of the restraints shall be in accordance with, and limited to, the manufacturer's guidelines.
1.17 Fun-kart components shall be maintained and repaired in accordance with the manufacturer's specifications and utilizing only the manufacturer's authorized replacement parts with installation performed by dealers or other skilled persons.

Stay connected.

Be sure to follow **@ridejetson**
on social media to learn about fantastic offers,
giveaways, and all the latest Jetson news.

Loving your ride?

Then be sure to leave a review at ridejetson.com/reviews.
We can't wait to hear from you!

JETSON

#MakeMoves

Questions? Let us help.

ridejetson.com/support
ridejetson.com/chat

To exercise your product's warranty or inquire about warranty coverage, contact us directly.

1-888-976-9904

Manufactured in Yueyang, China
Imported by Jetson Electric Bikes LLC.
P.O. Box 320149, 775 4th Ave #2,
Brooklyn, NY 11232

www.ridejetson.com

Made in China
Date Code: 07/2024
Document Edition: v1.0

© 2024, JETSON. ALL RIGHTS RESERVED. Manufactured by JETSON ELECTRIC BIKES LLC.
No portion of this document, including shape, copy, graphics, and design, may be reproduced or transmitted in any form or by any means.