JETSON

3-Wheel Light-Up Kick Scooter.

A guide for your ride.

IMPORTANT: READ CAREFULLY AND RETAIN FOR FUTURE REFERENCE.

MODEL SKUS: JBYOD-3KIK; JCARS-3KIK; JFRZN-3KIK; JFRZ2-3KIK; JPRNS-3KIK; JPRNS2-3KIK
JMCKY-3KIK; JGABY-3KIK; JMRMD-3KIK; JMOA-3KIK

Jetson's top two riding rules:
Be safe. Have fun!

Contents

Safety Warnings 4

Warranty Coverage 6

Product Overview 8

Specs & Features 10

Online Resources 11

1. Getting Started

Unfolding & Folding Your Scooter 12

Adjusting the Handlebar 14

Inserting the Batteries 17

2. Making Moves

Riding Your Scooter 18

Turning 18

Using the Brake 19

Using the Lights 20

Helmet Safety 21

Care & Maintenance 22

Safety Warnings

- Before use, please read the user manual and safety warnings carefully, and make sure you understand and accept all the safety instructions. The user will be responsible for any loss or damage caused by improper use.
- Before each cycle of operation, the operator shall perform the preoperation checks specified by the manufacturer: That all guards and pads originally supplied by the manufacturer are in proper place and in serviceable condition; That the braking system is functioning properly; That any and all axle guards, chain guards, or other covers or guards supplied by the manufacturer are in place and in serviceable condition; That tires are in good condition, inflated properly, and have sufficient tread remaining; The area that the product is to be operated should be safe and suitable for safe operation.
- Components shall be maintained and repaired in accordance with the manufacturer's specifications and using only the manufacturer's authorized replacement parts with installation performed by dealers or other skilled persons.
- Do not mix old and new batteries.
- Do not mix alkaline, standard (carbon-zinc) or rechargeable batteries.
- This product should not be used by children or persons with reduced physical, sensory or mental capabilities, or lack of experience and knowledge, unless they have been given supervision or instruction (IEC 60335-1/A2:2006).
- Unsupervised children should not play with the product (IEC 60335-1/A2:2006).
- Adult supervision is required.
- The rider should not exceed 132 lb.
- Units shall not be operated to perform racing, stunt riding, or other maneuvers, which may cause loss of control, or may cause uncontrolled operator/ passenger actions or reactions.
- Never use near motor vehicles.
- Avoid sharp bumps, drainage grates, and sudden surface changes. Scooter may suddenly stop.
- Avoid streets and surfaces with water, sand, gravel, dirt, leaves, and other debris. Wet weather impairs traction, braking, and visibility.
- Avoid riding around flammable gas, steam, liquid, or dust that could cause fire.
- Operators shall adhere to all of the manufacturer's recommendations and instructions, as well as comply with all laws and ordinances: Units without headlights shall be operated only with adequate daylight conditions of visibility, and; Owners shall be encouraged to highlight (for conspicuity) using lighting, reflectors, and for low-riding units, signal flags on flexible poles.
- Persons with the following conditions shall be cautioned not to operate: Those with heart conditions; Pregnant women; Persons with head, back, or neck ailments, or prior surgeries to those areas of the body; and persons with any mental or physical conditions that may make them susceptible to injury or impair their physical dexterity or mental capabilities to recognize, understand, and perform all of the safety instructions and to be able to assume the hazards inherent in unit use.
- Do not ride at night.
- Do not ride after drinking or taking prescription medication.
- Do not carry items when riding.
- Never operate the product barefooted.
- Always wear shoes and keep shoelaces tied.
- Make sure your feet are always placed securely on the deck.
- Operators always shall use appropriate protective clothing, including but not limited to a helmet, with appropriate certification, and any other equipment recommended by the manufacturer: Always wear protective equipment such as helmet, knee pads, and elbow pads.
- Always give way to pedestrians.
- Be alert to things in front and far away from you.
- Do not allow distractions when riding, such as answering the phone or engaging in any other activities.
- The product cannot be ridden by more than one person.
- When you ride the product along with other riders, always keep a safe distance to avoid a collision.
- When turning, be sure to maintain your balance.
- Riding with improperly adjusted brakes is dangerous and can result in serious injury or death.
- The brake may become hot while operating, do not touch the brake with your bare skin.
- Applying brakes too hard or too suddenly can lock up a wheel, which could cause you to lose control and fall. Sudden or excessive application of the brake may result in injury or death.

- If the brake loosens, please adjust with the hexagon wrench, or please contact the Jetson Care Team.
- Replace worn or broken parts immediately.
- Check whether all safety labels are in place and understood before riding.
- The owner shall allow the use and operation of the unit after a demonstration that such operators can understand and operate all components of the unit before use.
- Do not ride without proper training. Do not ride at high speeds, on uneven terrain, or on slopes. Do not perform stunts or turn abruptly.
- Recommended for indoor use.
- Prolonged exposure to UV rays, rain and the elements may damage the enclosure materials, store indoors when not in use.

MODIFICATIONS

Do not attempt to disassemble, modify, repair, or replace the unit or any components of the unit without instruction from the Jetson Care Team. This will void any warranty, and can lead to malfunctions which may cause injury.

ADDITIONAL OPERATION PRECAUTIONS

Do not lift the product off the ground while it is on and the wheels are in motion. This can result in freely spinning wheels, which may cause injury to yourself or others nearby. Do not jump on or off the product, and do not jump while using it. Always keep your feet firmly planted on the foot rest while in operation. Always check the battery charge before using.

DISPOSAL OF USED BATTERY



Battery may contain hazardous substances which could endanger the environment and human health. This symbol marked on the battery and/or packaging indicates that used battery shall not be treated as municipal waste. Batteries should be disposed of at an appropriate collection point for recycling. By ensuring the used batteries are disposed of correctly, you will help preventing potential negative consequences for the environment and human health. The recycling of materials will help to conserve natural resources. For more information about recycling of used batteries, please contact your local municipality waste disposal service.

- Do not mix old and new batteries.
- Do not mix alkaline, standard (carbon-zinc) or rechargeable batteries.

California Proposition 65

⚠WARNING:

This product can expose you to chemicals including Chromium (hexavalent compounds), which is known to the State of California to cause cancer and birth defects or other reproductive harm. For more information go to: www.P65Warnings.ca.gov.

Warranty Coverage

GENERAL LIMITED WARRANTY

Your new Jetson product is warranted against defects in materials and workmanship as indicated on ridejetson.com/warranty for a period of time from the date of original retail purchase when used in accordance with Jetson's user manuals (refer to ridejetson.com/support). **Under this warranty, you will be able to direct your claims to Jetson even in situations where you purchased the Jetson Product from one of our authorized retailers.** To read the full terms of our warranty, visit ridejetson.com/warranty.

Product Overview

1. **HANDLEBAR**
2. **LIGHTING BUTTON**
3. **STEM CLAMP**
4. **STEM** (LED LIGHT-UP)
5. **FOLDING MECHANISM**
6. **HEADLIGHT**
7. **FRONT WHEEL** (MOTION-ACTIVATED LED LIGHT-UP)
8. **DECK**
9. **BATTERY COMPARTMENT**
10. **REAR FOOT BRAKE**
11. **REAR WHEEL** (MOTION-ACTIVATED LED LIGHT-UP)

TOOL INCLUDED:



2-BIT PHILLIPS-HEAD SCREWDRIVER (A) AND 5MM ALLEN KEY TOOL (B)

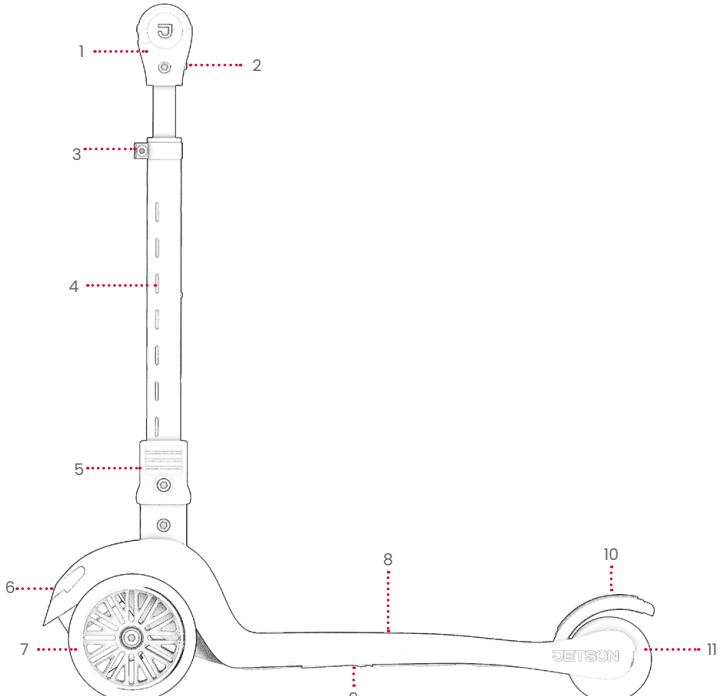

NOTE: IMAGES MAY NOT REFLECT EXACT APPEARANCE OF ACTUAL PRODUCT.

Specs & Features

- WHEELS: 4.7" (FRONT), 3.1" (REAR)
- UNFOLDED DIMENSIONS: 22.3" (L) × 10.2" (W) × 23.8" (H)
- FOLDED DIMENSIONS: 23.0" (L) × 10.2" (W) × 6.3" (H)
- DECK SIZE: 21.8" (L) × 4.9" (W)
- HANDLEBAR HEIGHT: 23.5" - 31.5"
- WEIGHT LIMIT: 132 LB
- PRODUCT WEIGHT: 7 LB
- RECOMMENDED AGE: 3+
-
- REAR FOOT BRAKE
- LED LIGHT-UP WHEELS, STEM, AND HEADLIGHT
- EASY FOLDING TECHNOLOGY
- REQUIRES 3 AA BATTERIES (NOT INCLUDED)

Online Resources



Scan for our most updated scooter onboarding materials and support resources.

⚠ WARNING:

FAILURE TO COMPLY WITH THE FOLLOWING INSTRUCTIONS MAY RESULT IN INJURY TO THE CHILD OR OTHERS.

- KEEP SMALL PARTS AWAY FROM CHILDREN DURING ASSEMBLY.
- ACCESSORY MUST BE ASSEMBLED AND REMOVED BY AN ADULT.
- FREQUENTLY INSPECT THE PRODUCT FOR DAMAGE.

* ADULTS MUST ASSIST CHILDREN IN THE ASSEMBLY AND INITIAL ADJUSTMENT PROCEDURES OF THE PRODUCT.

1. Getting Started

1.1 Unfolding & Folding Your Scooter

- TO UNFOLD OR FOLD, FIRST SLIDE THE FOLDING MECHANISM UP THE STEM TOWARDS THE HANDLEBAR.

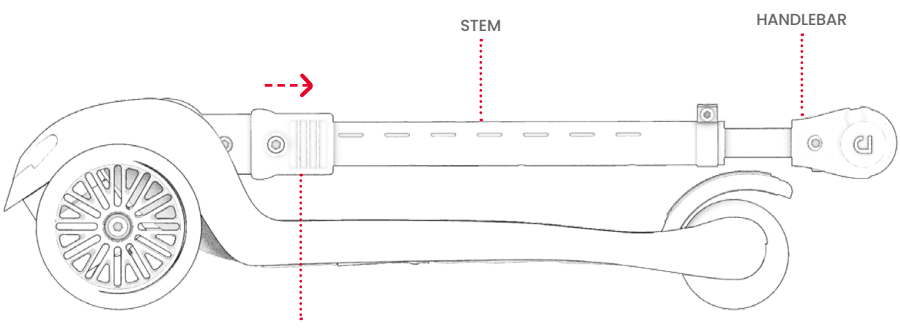

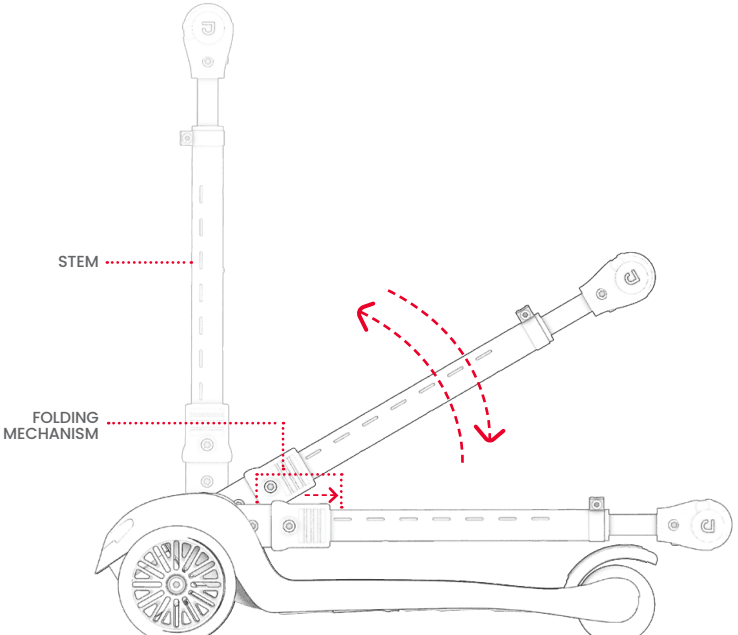

- **TO UNFOLD:** WHILE HOLDING THE FOLDING MECHANISM CLOSER TO THE HANDLEBAR, RAISE THE STEM UNTIL IT IS VERTICAL AND CLICKS INTO PLACE.
- **TO FOLD:** WHILE HOLDING THE FOLDING MECHANISM CLOSER TO THE HANDLEBAR, LOWER THE STEM DOWN TOWARDS THE REAR WHEEL UNTIL IT CLICKS INTO PLACE.

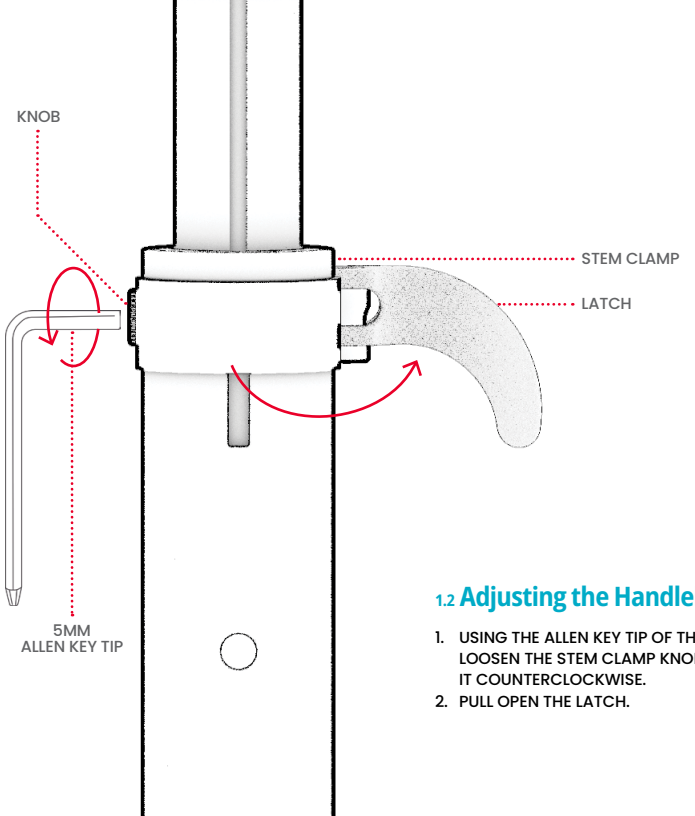

1.2 Adjusting the Handlebar

1. USING THE ALLEN KEY TIP OF THE 2-BIT TOOL, LOOSEN THE STEM CLAMP KNOB BY TURNING IT COUNTERCLOCKWISE.
2. PULL OPEN THE LATCH.

3. PRESS IN THE STEM PIN AND RAISE OR LOWER THE HANDLEBAR UNTIL THE PIN CLICKS INTO ANOTHER STEM PIN HOLE.

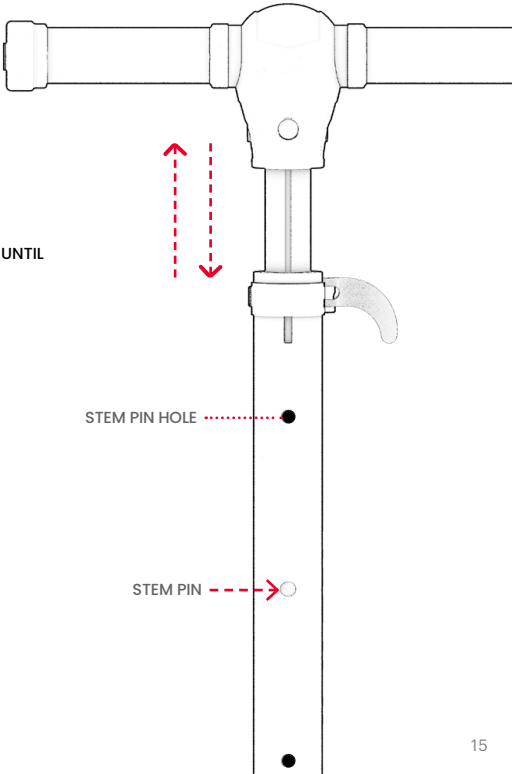

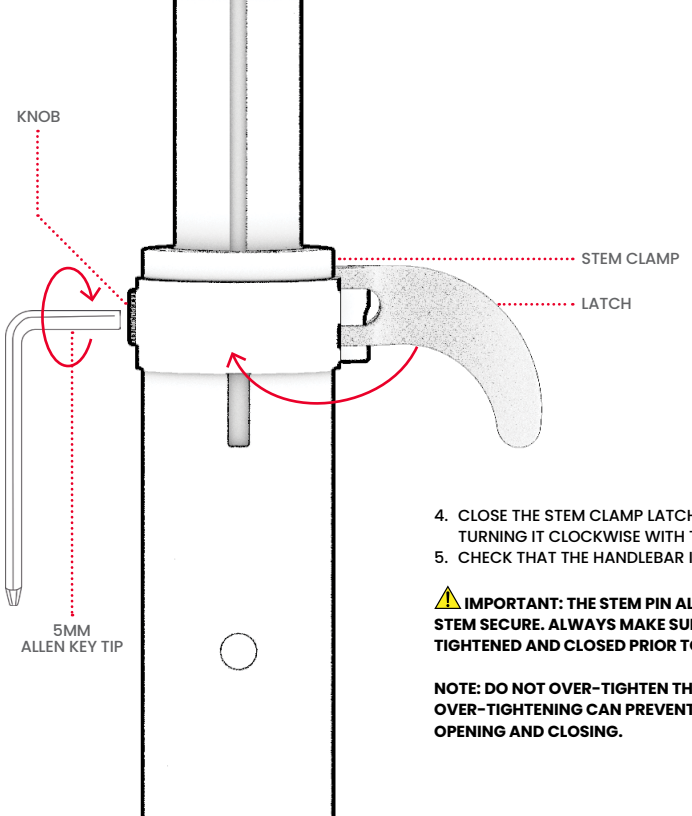

4. CLOSE THE STEM CLAMP LATCH AND TIGHTEN THE KNOB BY TURNING IT CLOCKWISE WITH THE ALLEN KEY.
5. CHECK THAT THE HANDLEBAR IS SECURE.

⚠ **IMPORTANT: THE STEM PIN ALONE WILL NOT KEEP THE STEM SECURE. ALWAYS MAKE SURE THE STEM CLAMP LATCH IS TIGHTENED AND CLOSED PRIOR TO RIDING.**

NOTE: DO NOT OVER-TIGHTEN THE STEM CLAMP KNOB. OVER-TIGHTENING CAN PREVENT THE STEM CLAMP LATCH FROM OPENING AND CLOSING.

1.3 Inserting the Batteries

YOU WILL NEED 3 AA BATTERIES IN ORDER TO POWER ON THE FRAME LIGHTS.

1. USE THE SCREWDRIVER TIP OF THE 2-BIT TOOL TO LOOSEN AND REMOVE THE SCREW ON THE BATTERY COMPARTMENT BY TURNING IT COUNTERCLOCKWISE.
2. REMOVE THE BATTERY COMPARTMENT COVER.
3. PLACE 3 AA BATTERIES INSIDE BASED ON THE +/- DIRECTIONS INDICATED ON THE INSIDE OF THE COMPARTMENT.
4. REPLACE THE BATTERY COMPARTMENT COVER.
5. REINSERT THE SCREW. TIGHTEN BY TURNING IT CLOCKWISE WITH THE SCREWDRIVER TIP.

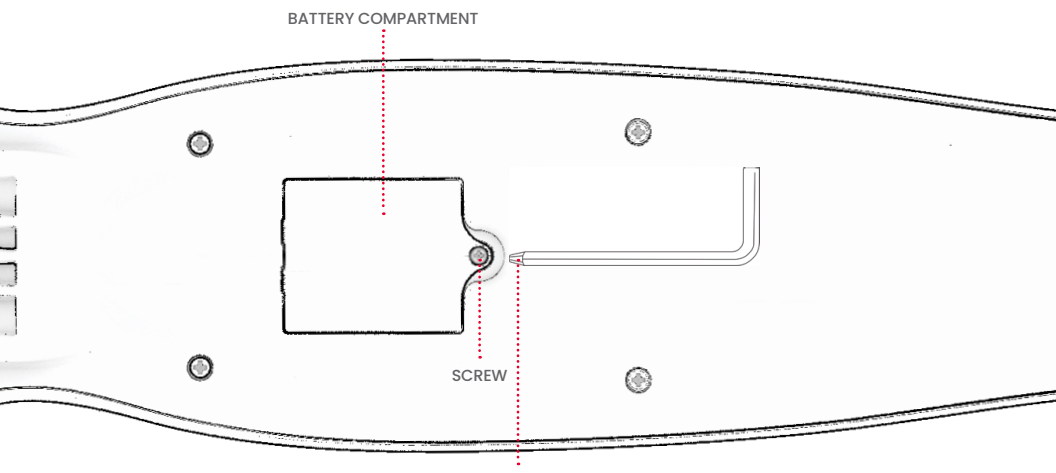

2. Making Moves

2.1 Riding Your Scooter

1. PLACE ONE FOOT AT THE FRONT OF THE DECK FACING FORWARD.
2. PUSH THE OTHER FOOT OFF THE GROUND TO PROPEL THE SCOOTER FORWARD. REPEAT AS NECESSARY TO ACHIEVE OR MAINTAIN DESIRED SPEED.
3. TO COAST, PLACE THE KICKING FOOT ON THE DECK BEHIND THE FRONT FOOT, TURNED OUTWARDS AT A SLIGHT ANGLE.

2.2 Turning

THIS IS A "LEAN-TO-STEER" SCOOTER. TO TURN, SLIGHTLY LEAN LEFT OR RIGHT WHILE RIDING AND THE SCOOTER WILL VEER ACCORDINGLY.

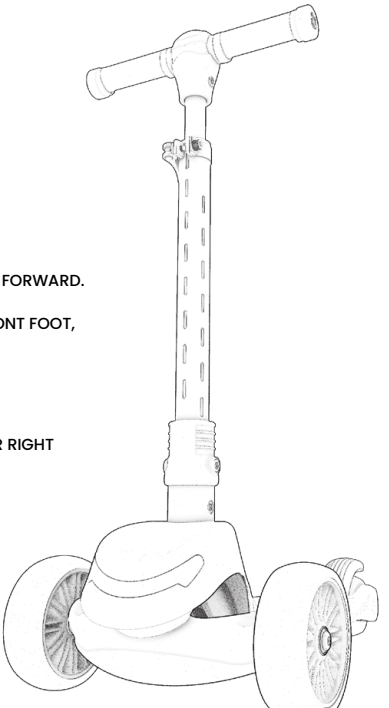

2.3 Using the Brake

PRESS DOWN GENTLY WITH YOUR REAR RIDING FOOT TO SLOW DOWN. APPLY MORE PRESSURE TO COME TO A COMPLETE STOP.

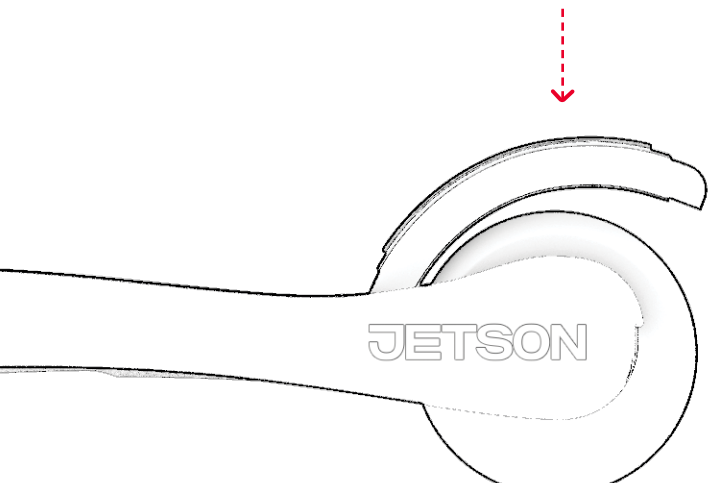

2.4 Using the Lights

WHEEL LIGHTS:

THE WHEEL LIGHTS ARE MOTION-ACTIVATED AND WILL ILLUMINATE AUTOMATICALLY WHENEVER THE WHEELS ARE ROLLING.

STEM LIGHTS AND HEADLIGHT:

SOME MODELS OF THIS SCOOTER HAVE LIGHTS IN THE STEM WITH A SINGLE ILLUMINATION STYLE AND OTHERS HAVE MULTIPLE STYLES PREPROGRAMMED IN.

MODELS WITH 1 ILLUMINATION STYLE:

- TO TURN THE LIGHTS ON OR OFF: QUICK-PRESS THE LIGHTING BUTTON.

MODELS WITH MULTIPLE ILLUMINATION STYLES:

- TO TURN THE LIGHTS ON: QUICK-PRESS THE LIGHTING BUTTON.
- TO CHANGE THE STEM LIGHTS: QUICK-PRESS THE BUTTON AGAIN TO CHANGE TO THE NEXT LIGHTING STYLE (8 TOTAL). STOP PRESSING WHEN YOU'VE LANDED ON THE LIGHTING PATTERN THAT FEELS RIGHT FOR YOUR RIDE.
- TO TURN OFF THE LIGHTS: QUICK-PRESS THE LIGHTING BUTTON AFTER REACHING THE LAST STYLE IN THE CYCLE OR, IF IN THE MIDDLE OF THE CYCLE, PRESS AND HOLD THE LIGHTING BUTTON FOR 3 SECONDS.

IMPORTANT: REMEMBER TO TURN OFF THE LIGHTS AT THE END OF A RIDE TO PRESERVE BATTERY POWER. IF 10 MINUTES HAVE PASSED WITHOUT ENGAGEMENT OF THE LIGHTING BUTTON, THE HEADLIGHT AND STEM LIGHTS WILL SHUT OFF AUTOMATICALLY. TO REACTIVATE THE LIGHTS, QUICK-PRESS THE LIGHTING BUTTON.

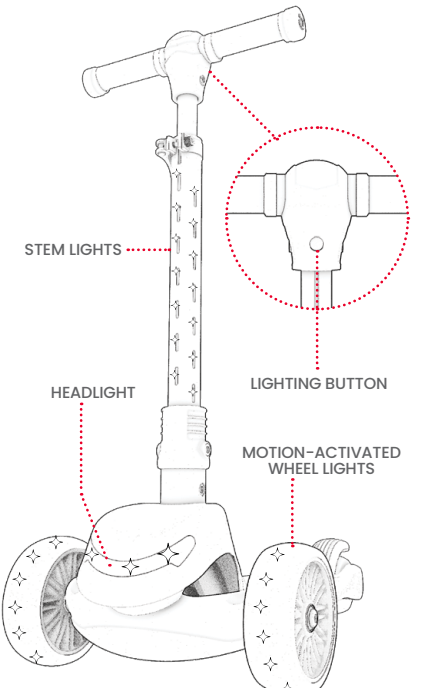

2.5 Helmet Safety

A HELMET SHOULD BE WORN BY THE RIDER AT ALL TIMES.



PROPER POSITIONING:
THE FOREHEAD IS COVERED
BY THE HELMET.



IMPROPER POSITIONING:
THE FOREHEAD IS EXPOSED.
A FALL COULD RESULT IN SERIOUS INJURY.

*** WEAR A HELMET, APPROPRIATE CLOTHING, SHOES, AND SAFETY GEAR. AVOID CLOTHING THAT CAN GET CAUGHT INTO OR UNDER THE WHEELS. CLOSED-TOE, FLAT SHOES ARE RECOMMENDED. WEAR AN ASTM F1492 APPROVED HELMET AND PROTECTIVE GEAR TO PREVENT INJURY IN THE EVENT OF AN ACCIDENT.**

Care & Maintenance

CLEANING THE SCOOTER

- TO CLEAN THE SCOOTER, CAREFULLY WIPE WITH A DAMP CLOTH AND THEN DRY WITH A DRY CLOTH.
- DO NOT APPLY WATER DIRECTLY TO THE SCOOTER. WATER CAN CAUSE DAMAGE OR DETERIORATION, WHICH COULD LEAD TO A MALFUNCTION THAT PUTS RIDER SAFETY AT RISK.

PRECAUTIONS

- KEEP AWAY FROM FIRE AND EXCESSIVE HEAT.
- AVOID INTENSE PHYSICAL IMPACT AND/OR SEVERE VIBRATION.
- RIDE THE SCOOTER ON A SMOOTH, FLAT SURFACE.
- PROTECT FROM WATER OR MOISTURE.
- CONTACT THE JETSON CARE TEAM IF THERE ARE ANY ISSUES WITH THE SCOOTER.

STORING THE SCOOTER

- STORE THE SCOOTER INDOORS AND IN A DRY PLACE.
- COVER THE SCOOTER TO PROTECT IT AGAINST DUST.

Stay connected.

Be sure to follow **@ridejetson**
on social media to learn about fantastic offers,
giveaways, and all the latest Jetson news.



Loving your ride?

Then be sure to leave a review at ridejetson.com/reviews.
We can't wait to hear from you!

JETSON

#MakeMoves

Questions? Let us help.

ridejetson.com/support
ridejetson.com/chat

To exercise your product's warranty or inquire about warranty coverage, contact us directly.

1-888-976-9904

Manufactured in Yongkang, China
Imported by Jetson Electric Bikes LLC.
P.O. Box 320149, 775 4th Ave #2,
Brooklyn, NY 11232

www.ridejetson.com





Made in China
Date Code: 05/2024
Document Edition: v1.2

© 2024, JETSON. ALL RIGHTS RESERVED. Manufactured by JETSON ELECTRIC BIKES LLC.
No portion of this document, including shape, copy, graphics, and design, may be reproduced or transmitted in any form or by any means.