

2019 Grand Cherokee

DIESEL SUPPLEMENT

IMPORTANT

This booklet contains FCA US LLC limited warranties. It should be kept in your vehicle and presented to your Dealer if any warranty service is needed.
The warranty text begins on page 4 of this booklet.

TABLE OF CONTENTS

SECTION		PAGE
1	INTRODUCTION	3
2	GETTING TO KNOW YOUR VEHICLE	7
3	GETTING TO KNOW YOUR INSTRUMENT PANEL	11
4	STARTING AND OPERATING	21
5	SERVICING AND MAINTENANCE	47
6	TECHNICAL SPECIFICATIONS	69
7	INDEX	79

INTRODUCTION

CONTENTS

■ A MESSAGE FROM FCA US LLC 4

A MESSAGE FROM FCA US LLC

FCA US LLC welcomes you as a turbocharged diesel-powered vehicle owner. Your diesel vehicle will sound, feel, drive and operate differently from a gasoline-powered vehicle. It is important that you read and understand this manual.

Almost 100% of the heavy trucks in the United States and Canada are diesel-powered because of the fuel economy, rugged durability, and high torque which permits pulling heavy loads.

You may find that some of the starting, operating, and maintenance procedures are different. However, they are simple to follow and careful adherence to them will ensure that you take full advantage of the features of this engine.

NOTE:

- Some aftermarket products may cause severe engine/transmission and/or exhaust system damage. Your vehicle's powertrain control systems can detect and store information about vehicle modifications that increase horsepower and torque output such as whether or not performance-enhancing powertrain components, commonly referred to as downloaders, power boxes, or performance chips have been used.
- Any chassis/suspension or tire size modifications to the vehicle will effect the performance of the Adaptive Cruise Control and Forward Collision Warning System.

This information cannot be erased and will stay in the system's memory even if the modification is removed. This information can be retrieved by FCA US LLC, and service and repair facilities, when servicing your vehicle. This information may be used to determine if repair will be covered by New Vehicle Limited Warranty.

There is a probability that the use of a "performance chip" will prohibit the engine from starting. In this instance, the vehicle will need to be serviced by a authorized dealer in order to return the vehicle to it's factory settings.

When it comes to service, remember that your authorized dealer knows your Jeep® vehicle best, has factory-trained technicians and genuine MOPAR® parts, and cares about your satisfaction.

GETTING TO KNOW YOUR VEHICLE

CONTENTS

■ REMOTE STARTING SYSTEM 8
□ How To Use Remote Start 8

REMOTE STARTING SYSTEM



This system uses the key fob to start the engine conveniently from outside the vehicle while still maintaining security. The system has a range of approximately 300 ft (91 m).

NOTE:

- The vehicle must be equipped with an automatic transmission to be equipped with Remote Start.
- Obstructions between the vehicle and the key fob may reduce this range.
- The Remote Start system will wait for the "Wait To Start" amber telltale to extinguish before cranking the engine. This allows time for the engine pre-heat cycle to pre-heat the cylinder air, and is normal in cold weather. Refer to "Warning And Indicator Lights" in "Getting To Know Your Instrument Panel" for further information.

How To Use Remote Start

All of the following conditions must be met before the engine will remote start.

- Gear selector in PARK
- Doors closed
- Hood closed
- HAZARD switch off
- BRAKE switch inactive (brake pedal not pushed)
- Battery at an acceptable charge level
- PANIC button not pushed
- Fuel meets minimum requirement

- System not disabled from previous remote start event
- Vehicle security alarm not active
- Water In Fuel Indicator Light is not illuminated
- "Wait To Start" telltale is not illuminated

WARNING!

- **Do not start or run an engine in a closed garage or confined area. Exhaust gas contains Carbon Monoxide (CO) which is odorless and colorless. Carbon Monoxide is poisonous and can cause serious injury or death when inhaled.**
- **Keep key fobs away from children. Operation of the Remote Start System, windows, door locks or other controls could cause serious injury or death.**

GETTING TO KNOW YOUR INSTRUMENT PANEL

CONTENTS

- ■ INSTRUMENT CLUSTER 12
- ■ INSTRUMENT CLUSTER DISPLAY 14
  - □ Diesel Displays 14
  - □ Fuel Filter Life Reset 14
  - □ Diesel Displays 15
  - □ Diesel Particulate Filter (DPF) Messages 15
  - □ Diesel Exhaust Fluid (DEF) Warning Messages . . .17
  - □ Diesel Exhaust Fluid (DEF) Fault Warning Messages 18
- ■ WARNING LIGHTS AND MESSAGES 20
  - □ Yellow Indicator Lights 20

INSTRUMENT CLUSTER

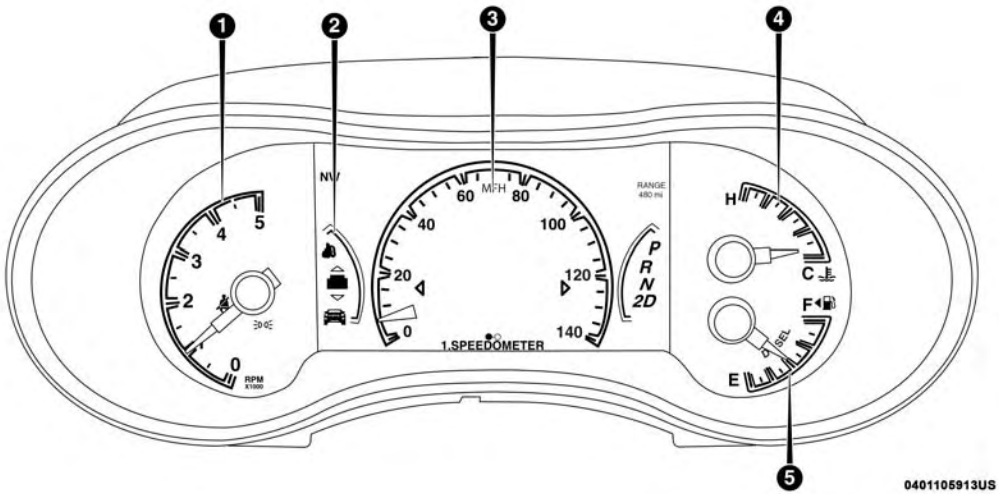

Instrument Cluster

1. Tachometer
   - Indicates the engine speed in revolutions per minute (RPM x 1000).
2. Instrument Cluster Display Menu
   - The instrument cluster display features a driver-interactive display. Refer to "Instrument Cluster Display" in "Getting To Know Your Instrument Panel".
3. Speedometer
   - Indicates vehicle speed.
4. Temperature Gauge
   - The temperature gauge shows engine coolant temperature. Any reading within the normal range indicates that the engine cooling system is operating satisfactorily.
   - The gauge pointer will likely indicate a higher temperature when driving in hot weather or up mountain grades. It should not be allowed to exceed the upper limits of the normal operating range.

WARNING!

Driving with a hot engine cooling system could damage your vehicle. If the temperature gauge reaches "H" pull over and stop the vehicle. Idle the vehicle with the air conditioner turned off until the gauge drops back into the normal range and is no longer red. If the gauge remains on the "H", turn the engine off immediately and call an authorized dealer for service.

CAUTION!

A hot engine cooling system is dangerous. You or others could be badly burned by steam or boiling coolant. You may want to call an authorized dealer for service if your vehicle overheats. If you decide to look under the hood yourself, see "Maintaining Your Vehicle". Follow the warnings under the Cooling System Pressure Cap paragraph.

5. Fuel Gauge
   - The pointer shows the level of fuel in the fuel tank when the ignition switch is in the ON/RUN position.

- The fuel pump symbol points to the side of the vehicle where the fuel door is located.

NOTE: The hard telltales will illuminate for a bulb check when the ignition is first cycled.

INSTRUMENT CLUSTER DISPLAY

Your vehicle is equipped with an instrument cluster display, which offers useful information to the driver. With the ignition in the STOP/OFF position, opening/closing of a door will activate the display for viewing, and display the total miles or kilometers in the odometer.

Diesel Displays

When the appropriate conditions exist, the following messages display in the instrument cluster display:

- Exhaust Filter Nearing Full Safely Drive at Highway Speeds to Clear
- Exhaust Filter Full – Power Reduced See Dealer
- Exhaust System Service Required – See Dealer
- Exhaust System – Filter XX% Full Service Required See Dealer
- Exhaust System Regeneration in Process Continue Driving
- Exhaust System – Regeneration Completed
- Engine Will Not Restart in XXXX mi DEF Low Refill Soon
- Engine Will Not Restart in XXXX mi Refill DEF
- Engine Will Not Start Refill DEF
- Service DEF System See Dealer
- Incorrect DEF Detected See Dealer
- Engine Will Not Restart in XXX mi Service DEF See Dealer
- Engine Will Not Restart Service DEF System See Dealer
- Engine Will Not Start Service DEF System See Dealer

Fuel Filter Life Reset

The cluster will display the “Fuel System Service Required – See Dealer” or “Service Fuel Filter” message when the fuel filter maintenance life is less than 5%. To verify if this is a fuel filter change event, go to the “Fuel Filter Life” screen in the “Vehicle Info” menu. When this message appears, dealers should replace the fuel filters.

NOTE: Use the steering wheel display controls for the following procedure(s)

1. Without pushing the brake pedal, cycle the ignition to the ON/RUN position (do not start the engine.)
2. Push and release the **down** arrow button to scroll downward through the main menu to "Vehicle Info."
3. Push and release the **right** arrow button to access the "Fuel Filter Life" screen.
4. Push and hold the **OK** button for one second to access the "Fuel Filter Life Reset" screen.
5. Push and release the **down** arrow button to select "Yes," then push and release the **OK** button to select reset of the Fuel Filter Life.
6. Push and release the **up** arrow button to exit the instrument cluster display screen.

NOTE: If the indicator message illuminates when you start the vehicle, the fuel filter indicator system did not reset. If necessary, repeat this procedure.

Diesel Displays

When the appropriate conditions exist, the following messages display in the instrument cluster display:

- Exhaust Filter Nearing Full Safely Drive at Highway Speeds to Clear
- Exhaust Filter Full – Power Reduced See Dealer
- Exhaust System Service Required – See Dealer
- Exhaust System – Filter XX% Full Service Required See Dealer
- Exhaust System Regeneration in Process Continue Driving
- Exhaust System – Regeneration Completed
- Engine Will Not Restart in XXXX mi DEF Low Refill Soon
- Engine Will Not Restart in XXXX mi Refill DEF
- Engine Will Not Start Refill DEF
- Service DEF System See Dealer
- Incorrect DEF Detected See Dealer
- Engine Will Not Restart in XXX mi Service DEF See Dealer
- Engine Will Not Restart Service DEF System See Dealer
- Engine Will Not Start Service DEF System See Dealer

Diesel Particulate Filter (DPF) Messages

This engine meets all required diesel engine emissions standards. To achieve these emissions standards, your

vehicle is equipped with a state-of-the-art engine and exhaust system. These systems are seamlessly integrated into your vehicle and managed by the Powertrain Control Module (PCM). The PCM manages engine combustion to allow the exhaust system's catalyst to trap and burn Particulate Matter (PM) pollutants, with no input or interaction on your part.

WARNING!

A hot exhaust system can start a fire if you park over materials that can burn. Such materials might be grass or leaves coming into contact with your exhaust system. Do not park or operate your vehicle in areas where your exhaust system can contact anything that can burn.

Your vehicle has the ability to alert you to additional maintenance required on your vehicle or engine. Refer to the following messages that may be displayed on your instrument cluster display:

- **Exhaust Filter Nearing Full Safely Drive at Highway Speeds to Clear** — This message will be displayed if the exhaust particulate filter reaches 80% of its maximum storage capacity. Under conditions of exclusive short duration and low speed driving cycles, your diesel engine and exhaust after-treatment system may never reach the conditions required to cleanse the filter to remove the trapped PM. If this occurs, the "Exhaust Filter XX% Full Safely Drive at Highway Speeds to Remedy" message will be displayed. If this message is displayed, you will hear one chime to assist in alerting you of this condition. By simply driving your vehicle at highway speeds for up to 20 minutes, you can remedy the condition in the particulate filter system and allow your diesel engine and exhaust after-treatment system to cleanse the filter to remove the trapped PM and restore the system to normal operating condition.
- **Exhaust System Regeneration in Process Continue Driving** — This message indicates that the Diesel Particulate Filter (DPF) is self-cleaning. Maintain your current driving condition until regeneration is completed.
- **Exhaust System — Regeneration Completed** — This message indicates that the Diesel Particulate Filter (DPF) self-cleaning is completed. If this message is displayed, you will hear one chime to assist in alerting you of this condition.
- **Exhaust System Service Required — See Dealer** — This messages indicates regeneration has been disabled due to a system malfunction. At this point the engine Powertrain Control Module (PCM) will register a fault code, the instrument panel will display a MIL light.

CAUTION!

See an authorized dealer, as damage to the exhaust system could occur soon with continued operation.

- **Exhaust Filter Full — Power Reduced See Dealer** — This message indicates the PCM has derated the engine to limit the likelihood of permanent damage to the after-treatment system. If this condition is not corrected and a dealer service is not performed, extensive exhaust after-treatment damage can occur. To correct this condition it will be necessary to have your vehicle serviced by an authorized dealer.

NOTE: Failing to follow the oil change indicator, changing your oil and resetting the oil change indicator by 0 miles remaining will prevent the diesel exhaust filter from performing it's cleaning routine. This will shortly result in a Malfunction Indicator Light (MIL) and reduced engine power. Only an authorized dealer will be able to correct this condition.

CAUTION!

See an authorized dealer, as damage to the exhaust system could occur soon with continued operation.

Diesel Exhaust Fluid (DEF) Warning Messages

Your vehicle will begin displaying warning messages when the DEF level reaches a driving range of approximately 500 miles. If the following warning message sequence is ignored, your vehicle may not restart unless DEF is added within the displayed mileage shown in the message.

- **Engine Will Not Restart in XXXX mi DEF Low Refill Soon** — This message will display when DEF driving range is less than 500 miles, DEF fluid top off is required with in the displayed mileage. The message will be displayed during vehicle start up with the current allowed mileage and accompanied by a single chime. The remaining mileage can be pulled up anytime by way of the "Messages" list within the display.
- **Engine Will Not Restart in XXXX mi Refill DEF** — This message will display when DEF driving range is less than 311 miles. It is also displayed at 249 miles, 186 miles, and 124 miles. Continuous Display starts at 124 miles. DEF fluid top off is required with in the displayed mileage. The message will be displayed during vehicle start up with an updated distance mileage, and it will be accompanied by a single chime. Starting at 100 miles, remaining range will be continuously displayed while operating the vehicle. Chimes will also accompany the

75, 50 and 25 mile remaining distances. The DEF Low telltale will be on continuously until DEF fluid is topped off.

- **Engine Will Not Restart Refill DEF** — This message will display when the DEF driving range is less than 1 mile, DEF fluid top off is required or the engine will not restart. The message will be displayed during vehicle start up, and it will be accompanied by a single chime. The DEF Low telltale will be illuminated continuously until DEF fluid tank is filled with a minimum of two gallons of DEF.

Diesel Exhaust Fluid (DEF) Fault Warning Messages

There are different messages which are displayed if the vehicle detects that the DEF system has been filled with a fluid other than DEF, has experienced component failures, or when tampering has been detected.

When the DEF system needs to be serviced the following warnings will display:

- **Service DEF System See Dealer** — This message will display when the fault is initially detected and each time the vehicle is started. The message will be accompanied by a single chime and the Malfunction Indicator Light. See an authorized dealer to have the vehicle serviced immediately. If not corrected in 30 miles, vehicle will enter the "Engine Will not restart in XXXmi Service DEF See dealer" warning stage and message.
- **Incorrect DEF Detected See Dealer** — This message will display if the DEF system has detected the incorrect fluid has been introduced to the DEF tank. The message will be accompanied by a single chime. See an authorized dealer to have the vehicle serviced immediately. If not corrected in 30 miles, vehicle will enter the "Engine Will Not Restart in XXX mi Service DEF See Dealer" warning stage and message.
- **Engine Will Not Restart in XXX mi Service DEF See Dealer** — This message is first displayed if the fault detected is not serviced after 30 miles of operation. It is also displayed at 250 miles 186 miles and 124 miles. System service is required within the displayed mileage.

The message will appear in the display during vehicle start up with an updated distance mileage, and it will be accompanied by a single chime. Starting at 124 miles, remaining range will be continuously displayed while operating the vehicle. Chimes will also accompany the 75, 50 and 25 mile remaining distances. See an authorized dealer to have the vehicle serviced immediately.

- **Engine Will Not Restart Service DEF System See Dealer** — This message will display if DEF system issue detected is not serviced during the allowed period. Your engine will not restart unless your vehicle is serviced by an authorized dealer. This message will be displayed when under 1 mile until engine will not start and each time the vehicle is started, and will be continuously displayed. The message will be accompanied by a single chime. Your Malfunction Indicator Light will be continuously illumined. See an authorized dealer if the message appears while engine is running.
- **Engine Will Not Start Service DEF System See Dealer** — This message will display when the fault detected is not serviced after the "Engine Will Not Restart Service DEF System See Dealer" message is displayed on the next subsequent restart. Your engine will not start unless your vehicle is serviced by an authorized dealer. The message will be accompanied by a single chime. Your Malfunction Indicator Light will be continuously illuminated. If the message appears and you can not start the engine, see an authorized dealer to have the vehicle serviced immediately.

NOTE:

- The gauge may take up to five seconds to update after adding a gallon or more of Diesel Exhaust Fluid (DEF) to the DEF tank. If you have a fault related to the DEF system, the gauge may not update to the new level. See an authorized dealer for service.
- The DEF gauge may also not immediately update after a refill if the temperature of the DEF fluid is below 12F (-11C). The DEF line heater will possibly warm up the DEF fluid and allow the gauge to update after a period of run time. Under very cold conditions, it is possible that the gauge may not reflect the new fill level for several drives.

WARNING LIGHTS AND MESSAGES

The warning/indicator lights will illuminate in the instrument panel together with a dedicated message and/or acoustic signal when applicable. These indications are indicative and precautionary and as such must not be considered as exhaustive and/or alternative to the information contained in the Owner's Manual, which you are advised to read carefully in all cases. Always refer to the information in this chapter in the event of a failure indication. All active telltales will display first if applicable. The system check menu may appear different based upon equipment options and current vehicle status. Some telltales are optional and may not appear.

Yellow Indicator Lights

— Low Diesel Exhaust Fluid (DEF) Indicator Light — If Equipped

The Low Diesel Exhaust Fluid (DEF) Indicator will illuminate if the vehicle is low on Diesel Exhaust Fluid (DEF). Refer to "Starting And Operating" for further information.

— Wait To Start Light — If Equipped

This indicator light will illuminate for approximately two seconds when the ignition is turned to the RUN position. Its duration may be longer based on colder operating conditions. Vehicle will not initiate start until telltale is no longer displayed

Refer to "Starting The Engine" in "Starting And Operating" for further information.

NOTE: The "Wait To Start" telltale may not illuminate if the intake manifold temperature is warm enough.

— Water In Fuel Indicator Light — If Equipped

The "Water In Fuel Indicator Light" will illuminate when there is water detected in the fuel filter. If this light remains on, DO NOT start the vehicle before you drain the water from the fuel filter to prevent engine damage.

Refer to the "Draining Fuel/Water Separator Filter" section in "Dealer Service" in "Servicing And Maintenance" for further information.

STARTING AND OPERATING

CONTENTS

- STARTING THE ENGINE — 3.0L DIESEL ENGINE 22
  - Automatic Transmission 23
  - Extreme Cold Weather 23
  - Normal Starting 23
  - Starting Fluids 24
- ENGINE BLOCK HEATER — IF EQUIPPED 25
- ENGINE BREAK-IN RECOMMENDATIONS — 3.0L DIESEL 25
- NORMAL OPERATION — 3.0L DIESEL ENGINE . .26
  - Cold Weather Precautions 27
  - Engine Idling 28
  - Stopping The Engine 29
  - Cooling System Tips — Automatic Transmission . .29
- REFUELING THE VEHICLE — DIESEL ENGINE . .30
  - Avoid Using Contaminated Fuel 32
  - Bulk Fuel Storage — Diesel Fuel 33
  - Diesel Exhaust Fluid 33
- TRAILER TOWING 37
  - Common Towing Definitions 37
  - Trailer Hitch Classification 39
  - Trailer Towing Weights (Maximum Trailer Weight Ratings) — Diesel 40
  - Trailer And Tongue Weight 40
  - Towing Requirements 41
  - Towing Tips 46

STARTING THE ENGINE — 3.0L DIESEL ENGINE

Before starting your vehicle, adjust your seat, both inside and outside mirrors, and fasten your seat belts.

The starter is allowed to crank for up to 30-second intervals. Waiting a few minutes between such intervals will protect the starter from overheating.

WARNING!

- **Before exiting a vehicle, always come to a complete stop, then shift the automatic transmission into PARK and apply the parking brake.**
- **Always make sure the keyless ignition node is in the OFF mode, key fob is removed from the vehicle and vehicle is locked.**
- **Never leave children alone in a vehicle, or with access to an unlocked vehicle. Leaving children in a vehicle unattended is dangerous for a number of reasons. A child or others could be seriously or fatally injured. Children should be warned not to touch the parking brake, brake pedal or the gear selector.**

(Continued)

WARNING! *(Continued)*

- **Do not leave the key fob in or near the vehicle, or in a location accessible to children, and do not leave the ignition of a vehicle equipped with Keyless Enter-N-Go in the ACC or ON/RUN mode. A child could operate power windows, other controls, or move the vehicle.**
- **Do not leave children or animals inside parked vehicles in hot weather. Interior heat build-up may cause serious injury or death.**

NOTE: Engine start up in very low ambient temperature could result in evident white smoke. This condition will disappear as the engine warms up.

CAUTION!

- **The engine is allowed to crank as long as 30 seconds. If the engine fails to start during this period, please wait at least two minutes for the starter to cool before repeating start procedure.**
- **If the "Water in Fuel Indicator Light" remains on, DO NOT START engine before you drain the water from the fuel filters to avoid engine damage. Refer to "Draining Fuel/Water Separator Filter" in "Servicing And Maintenance" for further information.**

Automatic Transmission

Start the engine with the transmission gear selector in the PARK position. Apply the brake before shifting to any driving range.

Extreme Cold Weather

The engine block heater is a resistance heater installed in the water jacket of the engine. It requires a 110–115 Volt AC electrical outlet with a grounded, three-wire extension cord. Its use is recommended for environments that routinely fall below -10°F (-23°C). It should be used when the vehicle has not been running overnight or longer periods and should be plugged in two hours prior to start. Its use is required for cold starts with temperatures under -20°F (-28°C).

NOTE: The engine block heater cord is a factory installed option. If your vehicle is not equipped, heater cords are available from your authorized Mopar dealer.

- A 12 Volt heater built into the fuel filter housing aids in preventing fuel gelling. It is controlled by a built-in thermostat.
- A Diesel Pre-Heat system both improves engine starting and reduces the amount of white smoke generated by a warming engine.

Normal Starting

Observe the instrument panel cluster lights when starting the engine.

NOTE: Normal starting of either a cold or a warm engine is obtained without pumping or pressing the accelerator pedal

1. Always apply the parking brake.
2. Press and hold the brake pedal while pushing the ENGINE START/STOP button once.

NOTE: A delay of the start of up to five seconds is possible under very cold conditions. The "Wait to Start" telltale will be illuminated during the pre-heat process, When the engine Wait To Start light goes off the engine will automatically crank.

CAUTION!

If the "Water in Fuel Indicator Light" remains on, DO NOT START the engine before you drain the water from the fuel filters to avoid engine damage. Refer to "Draining Fuel/Water Separator Filter" in "Servicing And Maintenance" for further information.

3. The system will automatically engage the starter to crank the engine. If the vehicle fails to start, the starter will disengage automatically after 25 seconds.
4. If you wish to stop the cranking of the engine prior to the engine starting, push the button again.
5. Check that the oil pressure warning light has turned off.
6. Release the parking brake.

NOTE: Only press one pedal at a time while driving the vehicle. Torque performance of the vehicle could be reduced if both pedals are pressed at the same time. If pressure is detected on both pedals simultaneously, a warning message will display in the instrument cluster. For further information, refer to "Instrument Cluster Display" in "Getting To Know Your Instrument Panel".

Starting Fluids

The engine is equipped with a glow plug preheating system. If the instructions in this manual are followed, the engine should start in all conditions and no type of starting fluid should be used.

WARNING!

- **Do not leave children or animals inside parked vehicles in hot weather. Interior heat build up may cause serious injury or death.**
- **When leaving the vehicle, always make sure the keyless ignition node is in the "OFF" mode, remove the key fob from the vehicle and lock the vehicle.**
- **Never leave children alone in a vehicle, or with access to an unlocked vehicle. Allowing children to be in a vehicle unattended is dangerous for a number of reasons. A child or others could be seriously or fatally injured. Children should be warned not to touch the parking brake, brake pedal or the gear selector.**
- **Do not leave the key fob in or near the vehicle, or in a location accessible to children, and do not leave the**

(Continued)

WARNING! *(Continued)*

ignition of a vehicle equipped with Keyless Enter-N-Go in the ACC or ON/RUN mode. A child could operate power windows, other controls, or move the vehicle.

ENGINE BLOCK HEATER — IF EQUIPPED

The engine block heater warms engine coolant and permits quicker starts in cold weather. Connect the heater cord to a ground-fault interrupter protected 110–115 Volt AC electrical outlet with a grounded, three-wire extension cord.

Its use is recommended for environments that routinely fall below -10°F (-23°C). It should be used when the vehicle has not been running for long periods of time and should be plugged in two hours prior to start. Its use is required for cold starts with temperatures under -20°F (-28°C).

To ensure reliable starting at these temperatures, use of an externally powered electric engine block heater (available from your authorized dealer) is recommended.

WARNING!

Remember to disconnect the cord before driving. Damage to the 110–115 Volt electrical cord could cause electrocution.

NOTE: The block heater will require 110 Volts AC and 6.5 Amps to activate the heater element.

ENGINE BREAK-IN RECOMMENDATIONS — 3.0L DIESEL

The diesel engine does not require a break-in period due to its construction. Normal operation is allowed, providing the following recommendations are followed:

- Warm up the engine before placing it under load.
- Do not operate the engine at idle for prolonged periods.
- Use the appropriate transmission gear to prevent engine lugging.
- Observe vehicle oil pressure and temperature indicators.

- Check the coolant and oil levels frequently.
- Vary throttle position at highway speeds when carrying or towing significant weight.

NOTE: Light duty operation such as light trailer towing or no load operation will extend the time before the engine is at full efficiency. Reduced fuel economy and power may be seen at this time.

The engine oil installed in the engine at the factory is a high-quality energy conserving type lubricant. Oil changes should be consistent with anticipated climate conditions under which vehicle operations will occur. The recommended viscosity and quality grades are shown under "Fluids And Lubricants" in "Technical Specifications" in this manual. NON-DETERGENT OR STRAIGHT MINERAL OILS MUST NEVER BE USED.

NORMAL OPERATION — 3.0L DIESEL ENGINE

Observe the following when the diesel engine is operating.

- All message center lights are off.
- Malfunction Indicator Light (MIL) is off.
- Engine Oil Pressure telltale is not illuminated.
- Voltmeter operation:

The voltmeter may show a gauge fluctuation at various engine temperatures. This is caused by the glow plug heating system. The number of cycles and the length of the cycling operation is controlled by the engine control module. Glow plug heater operation can run for several minutes, once the heater operation is complete the voltmeter needle will stabilize.

Cold Weather Precautions

Operation in ambient temperature below 32°F (0°C) may require special considerations. The following charts suggest these options:

Fuel Operating Range

NOTE: Use "Ultra Low Sulfur Diesel Fuels" **ONLY.**

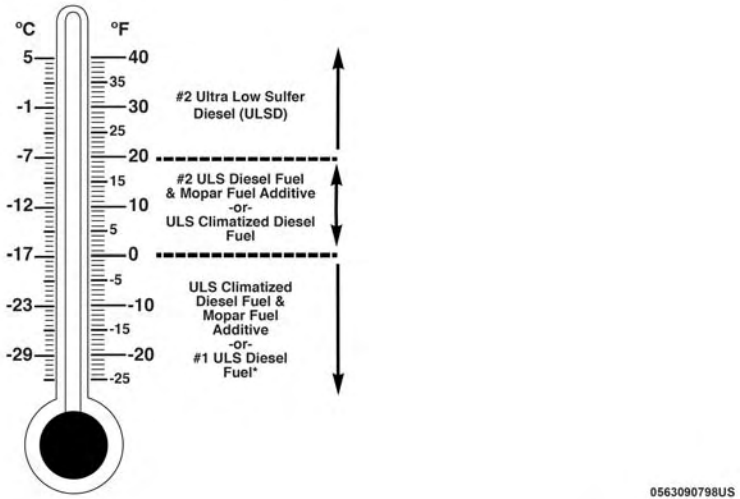

Fuel Operating Range Chart

*No. 1 Ultra Low Sulfur Diesel Fuel should only be used where extended arctic conditions (0°F/-18°C) exist".

NOTE:

- Use of Climatized Ultra Low Sulfur Diesel Fuel or Number 1 Ultra Low Sulfur Diesel Fuel results in a noticeable decrease in fuel economy.
- Climatized Ultra Low Sulfur Diesel Fuel is a blend of Number 2 Ultra Low Sulfur and Number 1 Ultra Low Sulfur Diesel Fuels which reduces the temperature at which wax crystals form in fuel.
- The fuel grade should be clearly marked on the pump at the fuel station.
- The engine requires the use of **"Ultra Low Sulfur Diesel Fuel"**. Use of incorrect fuel could result in engine and exhaust system damage. Refer to "Fuel Requirements" in "Technical Specifications" for further information.
- If climatized or diesel Number 1 ULSD fuel is not available, and you are operating below (20°F/-6°C), in sustained arctic conditions, Mopar Premium Diesel Fuel Treatment (or equivalent) is recommended to avoid gelling (see Fuel Operating Range Chart).

Engine Oil Usage

Refer to "Dealer Service" in "Servicing And Maintenance" for the correct engine oil viscosity.

Engine Warm-Up

Avoid full throttle operation when the engine is cold. When starting a cold engine, bring the engine up to operating speed slowly to allow the oil pressure to stabilize as the engine warms up.

If temperatures are below 32°F (0°C), operate the engine at moderate speeds for five minutes before full loads are applied.

Engine Idling

Avoid prolonged idling, long periods of idling may be harmful to your engine because combustion chamber temperatures can drop so low that the fuel may not burn completely. Incomplete combustion allows carbon and varnish to form on piston rings, cylinder head valves, and injector nozzles. Also, the unburned fuel can enter the crankcase, diluting the oil and causing rapid wear to the engine.

Stopping The Engine

After full load operation, idle the engine for a few minutes before shutting it down. This idle period will allow the lubricating oil and coolant to carry excess heat away from the turbocharger.

NOTE: Refer to the following chart for proper engine shutdown.

Driving Condition	Load	Turbocharger Temperature	Idle Time (min.) Before Engine Shutdown
Stop and Go	Empty	Cool	None
Stop and Go	Medium		0.5
Highway Speeds	Medium	Warm	1.0
City Traffic	Maximum GCWR		1.5
Highway Speeds	Maximum GCWR		2.0
Uphill Grade	Maximum GCWR	Hot	2.5

NOTE: Under certain conditions the engine fan will run after the engine is turned off. These conditions are under high load and high temperature conditions.

Cooling System Tips — Automatic Transmission

To reduce the potential for engine and transmission overheating in high ambient temperature conditions, take the following actions:

- City Driving — When stopped, shift the transmission into NEUTRAL and increase engine idle speed.
- Highway Driving — Reduce your speed.
- Up Steep Hills — Select a lower transmission gear.
- Air Conditioning — Turn it off temporarily.

NOTE: If the coolant temperature is too high the A/C will automatically turn off.

Do Not Operate The Engine With Low Oil Pressure

If the low oil pressure warning light turns on while driving, stop the vehicle and shut down the engine as soon as possible. A chime will sound when the light turns on.

NOTE: Do not operate the vehicle until the cause is corrected. This light does not show how much oil is in the engine. The engine oil level must be checked under the hood.

CAUTION!

If oil pressure falls to less than normal readings, shut the engine off immediately. Failure to do so could result in immediate and severe engine damage.

Do Not Operate The Engine With Failed Parts

All engine failures give some warning before the parts fail. Be on the alert for changes in performance, sounds, and visual evidence that the engine requires service. Some important clues are:

- Engine misfiring or vibrating severely.
- Sudden loss of power.
- Unusual engine noises.
- Fuel, oil or coolant leaks.
- Sudden change, outside the normal operating range, in the engine operating temperature.
- Excessive smoke.
- Oil pressure drop.

REFUELING THE VEHICLE — DIESEL ENGINE

1. Press the fuel filler door release switch (located under the headlamp switch).

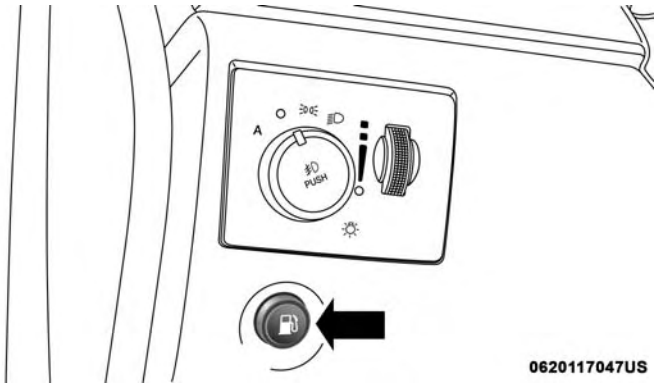

Fuel Filler Door Release Switch

2. Open the fuel filler door.

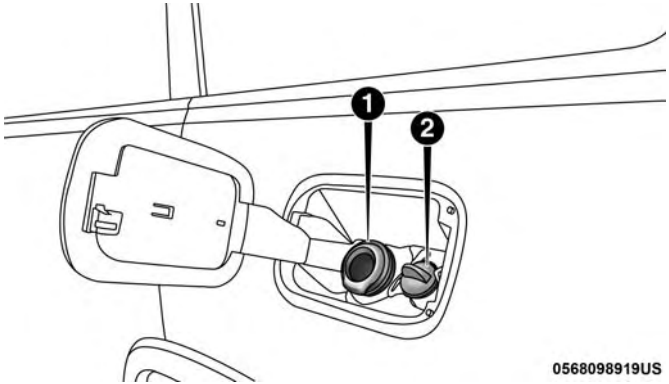

Fuel and Diesel Exhaust Fluid Fill Location

1 — Fuel Fill Location
2 — Diesel Exhaust Fluid Fill Location

NOTE: There is no fuel filler cap. A flapper door inside the filler pipe seals the system.

3. Insert the fuel nozzle fully into the filler pipe – the nozzle opens and holds the flapper door while refueling.
4. Fill the vehicle with fuel – when the fuel nozzle "clicks" or shuts off the fuel tank is full.
5. Wait five seconds before removing the nozzle to allow fuel to drain from the nozzle.
6. Remove the fuel nozzle and close the fuel door.

Emergency Fuel Can Refueling

Most fuel cans will not open the flapper door.

A funnel is provided to open the flapper door to allow emergency refueling with a fuel can.

1. Retrieve funnel from the spare tire kit.

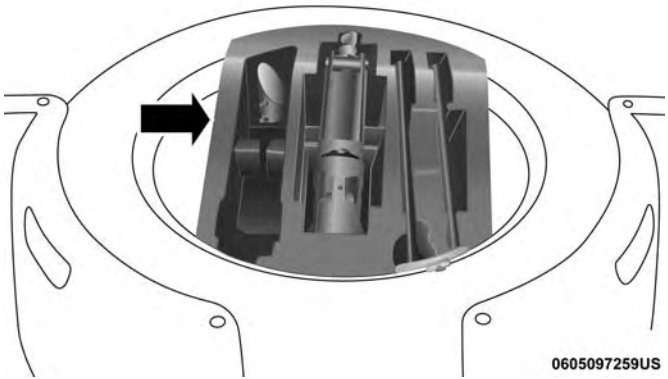

Fuel Fill Funnel Location

2. Insert funnel into same filler pipe opening as the fuel nozzle.

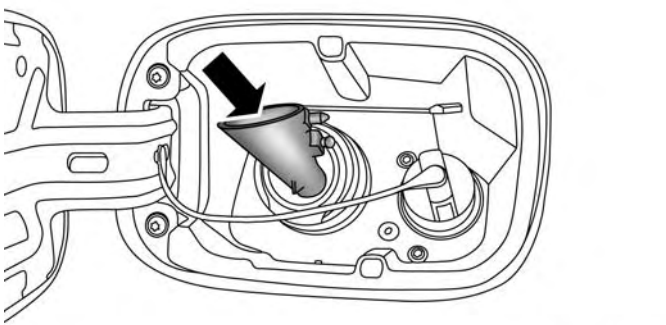

Emergency Fuel Fill Location

NOTE: Ensure funnel is inserted fully to hold flapper door open.

3. Pour fuel into funnel opening.
4. Remove funnel from filler pipe, clean off prior to putting back in the spare tire kit.

WARNING!

- **Never have any smoking materials lit in or near the vehicle when the fuel door is open or the tank is being filled.**
- **Never add fuel when the engine is running. This is in violation of most state and federal fire regulations and may cause the "Malfunction Indicator Light" to turn on.**
- **A fire may result if fuel is pumped into a portable container that is inside of a vehicle. You could be burned. Always place fuel containers on the ground while filling.**

CAUTION!

To avoid fuel spillage and overfilling, do not "top off" the fuel tank after filling.

Avoid Using Contaminated Fuel

Fuel that is contaminated by water or dirt can cause severe damage to the engine fuel system. Proper maintenance of the engine fuel filter and fuel tank is essential. Refer to "Dealer Service" in "Servicing And Maintenance" for further information.

Bulk Fuel Storage — Diesel Fuel

If you store quantities of fuel, good maintenance of the stored fuel is also essential. Fuel contaminated with water will promote the growth of "microbes." These microbes form "slime" that will clog the fuel filtration system and lines. Drain condensation from the supply tank and change the line filter on a regular basis.

NOTE: When a diesel engine is allowed to run out of fuel, air is pulled into the fuel system.

If the vehicle will not start, refer to "Dealer Service / Priming If The Engine Has Run Out Of Fuel" in "Servicing And Maintenance" for further information.

WARNING!

Do not open the high pressure fuel system with the engine running. Engine operation causes high fuel pressure. High pressure fuel spray can cause serious injury or death.

Diesel Exhaust Fluid

Your vehicle is equipped with a Selective Catalytic Reduction system to meet the very stringent diesel emissions standards required by the Environmental Protection Agency.

The purpose of the SCR system is to reduce levels of NOx (oxides of nitrogen emitted from engines) that are harmful to our health and the environment to a near-zero level. A small quantity of Diesel Exhaust Fluid (DEF) is injected into the exhaust upstream of a catalyst where, when vaporized, it converts smog-forming nitrogen oxides (NOx) into harmless nitrogen (N2) and water vapor (H2O), two natural components of the air we breathe. You can operate with the comfort that your vehicle is contributing to a cleaner, healthier world environment for this and generations to come.

System Overview

This vehicle is equipped with a Diesel Exhaust Fluid (DEF) injection system and a Selective Catalytic Reduction (SCR) catalyst to meet the emission requirements.

The DEF injection system consists of the following components:

- DEF tank
- DEF pump
- DEF injector
- Electronically-heated DEF Lines
- NOx sensors
- Temperature sensors
- SCR catalyst

The DEF injection system and SCR catalyst enable the achievement of diesel emissions requirements; while maintaining outstanding fuel economy, drivability, torque and power ratings.

Refer to “Instrument Cluster Display” in “Getting To Know Your Instrument Panel” for system messages and warnings.

NOTE:

- Your vehicle is equipped with a DEF injection system. You may occasionally hear an audible clicking noise from under the vehicle at a stop. This is normal operation.
- The DEF pump will run for a period of time after engine shutdown to purge the DEF system. This is normal operation and may be audible from the rear of the vehicle.

Diesel Exhaust Fluid Storage

Diesel Exhaust Fluid (DEF) is considered a very stable product with a long shelf life. If DEF is kept in temperatures between 10° and 90°F (-12° and 32°C), it will last a minimum of one year.

DEF is subject to freezing at the lowest temperatures. For example, DEF may freeze at temperatures at or below 12° F (-11° C). The system has been designed to operate in this environment.

NOTE: When working with DEF, it is important to know that:

- Any containers or parts that come into contact with DEF must be DEF compatible (plastic or stainless steel). Copper, brass, aluminum, iron or non-stainless steel should be avoided as they are subject to corrosion by DEF.
- If DEF is spilled, it should be wiped up completely.

Adding Diesel Exhaust Fluid

The DEF gauge (located on the instrument cluster display) will display the level of DEF remaining in the tank. Refer to "Instrument Cluster Display" in "Getting To Know Your Instrument Panel" for further information.

NOTE: Driving conditions (altitude, vehicle speed, load, etc.) will effect the amount of DEF that is used in your vehicle.

DEF Fill Procedure

NOTE: Refer to "Fluids And Lubricants" in the "Technical Specifications" section for the correct fluid type.

1. Remove cap from DEF fill inlet (located in fuel door).

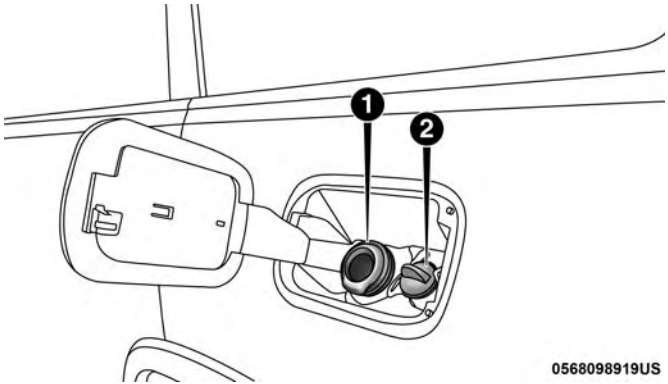

Fuel and Diesel Exhaust Fluid Fill Location

1 — Diesel Fuel Filler
2 — Diesel Exhaust Fluid Filler

2. Insert DEF fill adapter/nozzle into DEF fill inlet.

NOTE:

- The DEF gauge may take up to five seconds to update after adding a gallon or more of Diesel Exhaust Fluid (DEF) to the DEF tank. If you have a fault related to the DEF system, the gauge may not update to the new level. See an authorized dealer for service.
- The DEF gauge may also not immediately update after a refill if the temperature of the DEF fluid is below 12F (-11C). The DEF line heater will possibly warm up the DEF fluid and allow the gauge to update after a period of run time. Under very cold conditions, it is possible that the gauge may not reflect the new fill level for several drives.

CAUTION!

- **To avoid DEF spillage, and possible damage to the DEF tank from overfilling, do not "top off" the DEF tank after filling.**
- **DO NOT OVERFILL. DEF will freeze below 12°F (-11°C). The DEF system is designed to work in**

(Continued)

CAUTION! ***(Continued)***

temperatures below the DEF freezing point, however, if the tank is overfilled and freezes, the system could be damaged.

- **When DEF is spilled, clean the area immediately with water and use an absorbent material to soak up the spills on the ground.**
- **Do not attempt to start your engine if DEF is accidentally added to the diesel fuel tank as it can result in severe damage to your engine, including but not limited to failure of the fuel pump and injectors.**
- **Never add anything other than DEF to the tank – especially any form of hydrocarbon such as diesel fuel, fuel system additives, gasoline, or any other petroleum-based product. Even a very small amount of these, less than 100 parts per million or less than 1 oz. (30 ml) per 78 gallons (295 liters) will contaminate the entire DEF system and will require replacement. If owners use a container, funnel or nozzle when refilling the tank, it should either be new or one that is has only been used for adding DEF. Mopar provides an attachable nozzle with its DEF for this purpose.**

3. Stop filling the DEF tank immediately when any of the following happen: DEF stops flowing from the fill bottle into the DEF fill inlet, DEF splashes out the fill inlet, or a DEF pump nozzle automatically shuts off.
4. Reinstall cap onto DEF fill inlet.

TRAILER TOWING

In this section you will find safety tips and information on limits to the type of towing you can reasonably do with your vehicle. Before towing a trailer, carefully review this information to tow your load as efficiently and safely as possible.

To maintain the New Vehicle Limited Warranty coverage, follow the requirements and recommendations in this manual concerning vehicles used for trailer towing.

Common Towing Definitions

The following trailer towing related definitions will assist you in understanding the following information:

Gross Vehicle Weight Rating (GVWR)

The GVWR is the total allowable weight of your vehicle. This includes driver, passengers, cargo and tongue weight. The total load must be limited so that you do not exceed the GVWR. Refer to "Vehicle Loading/Vehicle Certification Label" in "Starting And Operating" for further information.

Gross Trailer Weight (GTW)

The GTW is the weight of the trailer plus the weight of all cargo, consumables and equipment (permanent or temporary) loaded in or on the trailer in its "loaded and ready for operation" condition.

The recommended way to measure GTW is to put your fully loaded trailer on a vehicle scale. The entire weight of the trailer must be supported by the scale.

WARNING!

If the gross trailer weight is 5,000 lbs (2,267 kg) or more, it is recommended to use a weight-distributing hitch to ensure stable handling of your vehicle. If you use a standard weight-carrying hitch, you could lose control of your vehicle and cause a collision.

Gross Axle Weight Rating (GAWR)

The GAWR is the maximum capacity of the front and rear axles. Distribute the load over the front and rear axles evenly. Make sure that you do not exceed either front or

rear GAWR. Refer to "Vehicle Loading/Vehicle Certification Label" in "Starting And Operating" for further information.

WARNING!

It is important that you do not exceed the maximum front or rear GAWR. A dangerous driving condition can result if either rating is exceeded. You could lose control of the vehicle and have a collision.

Tongue Weight (TW)

The tongue weight is the downward force exerted on the hitch ball by the trailer. You must consider this as part of the load on your vehicle.

Trailer Frontal Area

The frontal area is the maximum height multiplied by the maximum width of the front of a trailer.

Trailer Sway Control

The trailer sway control can be a mechanical telescoping link that can be installed between the hitch receiver and the trailer tongue that typically provides adjustable friction associated with the telescoping motion to dampen any unwanted trailer swaying motions while traveling.

If equipped, the electronic Trailer Sway Control (TSC) recognizes a swaying trailer and automatically applies individual wheel brakes and/or reduces engine power to attempt to eliminate the trailer sway.

Weight-Carrying Hitch

A weight-carrying hitch supports the trailer tongue weight, just as if it were luggage located at a hitch ball or some other connecting point of the vehicle. These kinds of hitches are the most popular on the market today and they are commonly used to tow small and medium sized trailers.

Weight-Distributing Hitch

A weight-distributing system works by applying leverage through spring (load) bars. They are typically used for heavier loads to distribute trailer tongue weight to the tow vehicle's front axle and the trailer axle(s). When used in accordance with the manufacturer's directions, it provides for a more level ride, offering more consistent steering and brake control thereby enhancing towing safety. The addition of a friction/hydraulic sway control also dampens sway caused by traffic and crosswinds and contributes positively to tow vehicle and trailer stability. Trailer sway control and a weight distributing (load equalizing) hitch are recommended for heavier Tongue Weights (TW) and

may be required depending on vehicle and trailer configuration/loading to comply with Gross Axle Weight Rating (GAWR) requirements.

WARNING!

- **An improperly adjusted Weight Distributing Hitch system may reduce handling, stability, braking performance, and could result in a collision.**
- **Weight Distributing Systems may not be compatible with Surge Brake Couplers. Consult with your hitch and trailer manufacturer or a reputable Recreational Vehicle dealer for additional information.**

Trailer Hitch Classification

The following chart provides the industry standard for the maximum trailer weight a given trailer hitch class can tow and should be used to assist you in selecting the correct trailer hitch for your intended towing condition.

(Continued)

Trailer Hitch Classification Definitions	
Class	**Max. Trailer Hitch Industry Standards**
Class I - Light Duty	2,000 lbs (907 kg)
Class II - Medium Duty	3,500 lbs (1,587 kg)
Class III - Heavy Duty	5,000 lbs (2,267 kg)
Class IV - Extra Heavy Duty	10,000 lbs (4,535 kg)
Refer to the "Trailer Towing Weights (Maximum Trailer Weight Ratings)" chart for the Maximum Gross Trailer Weight (GTW) towable for your given drivetrain.	
All trailer hitches should be professionally installed on your vehicle.	

Trailer Towing Weights (Maximum Trailer Weight Ratings) — Diesel

The following chart provides the maximum trailer weight ratings towable for your given drivetrain:

Engine	Model	Frontal Area	Max. GTW (Gross Trailer Wt.)	Max. Trailer Tongue Wt. (See Note)
3.0L Diesel	4x2	55 sq ft (5.11 sq m)	7,400 lbs (3,356 kg)	740 lbs (335 kg)
3.0L Diesel	4x4	55 sq ft (5.11 sq m)	7,200 lbs (3,265 kg)	720 lbs (326 kg)
Refer to local laws for maximum trailer towing speeds.				

NOTE: The trailer tongue weight must be considered as part of the combined weight of occupants and cargo, and should never exceed the weight referenced on the Tire and Loading Information placard. Refer to "Tires" in "Servicing And Maintenance" for further information. The addition of passengers and cargo may require reducing trailer tongue load and Gross Trailer Weight (GTW). Redistributing cargo (to the trailer) may be necessary to avoid exceeding Rear Gross Axle Weight Rating (GAWR) of 3,700 lbs (1 678 kg).

Trailer And Tongue Weight

Never exceed the maximum tongue weight stamped on your bumper or trailer hitch.

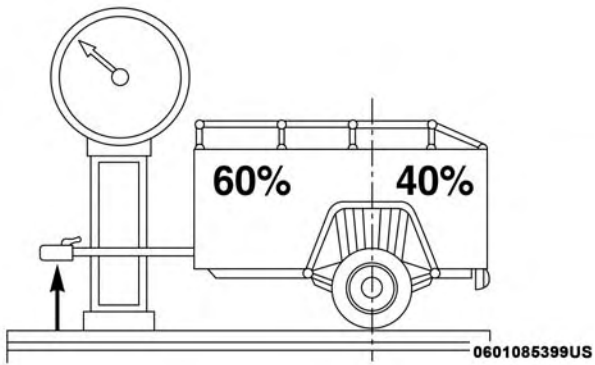

Weight Distribution

CAUTION!

Always load a trailer with 60% of the weight in the front of the trailer. This places 10% of the GTW on the tow hitch of your vehicle. Loads balanced over the wheels or heavier in the rear can cause the trailer to sway severely side to side which will cause loss of control of the vehicle and trailer. Failure to load trailers heavier in front is the cause of many trailer collisions.

Consider the following items when computing the weight on the rear axle of the vehicle:

- The tongue weight of the trailer.
- The weight of any other type of cargo or equipment put in or on your vehicle.
- The weight of the driver and all passengers.

NOTE: Remember that everything put into or on the trailer adds to the load on your vehicle. Also, additional factory-installed options or dealer-installed options must be considered as part of the total load on your vehicle. Refer to the "Tire And Loading Information" placard for the maximum combined weight of occupants and cargo for your vehicle.

Towing Requirements

To promote proper break-in of your new vehicle drivetrain components, the following guidelines are recommended.

CAUTION!

- **Do not tow a trailer at all during the first 500 miles (805 km) the new vehicle is driven. The engine, axle or other parts could be damaged.**
- **Then, during the first 500 miles (805 km) that a trailer is towed, do not drive over 50 mph (80 km/h) and do not make starts at full throttle. This helps the engine and other parts of the vehicle wear in at the heavier loads.**

Perform the maintenance listed in the "Scheduled Servicing". Refer to "Scheduled Servicing" in "Servicing And Maintenance" for the proper maintenance intervals. When towing a trailer, never exceed the GAWR or GCWR ratings.

WARNING!

Improper towing can lead to a collision. Follow these guidelines to make your trailer towing as safe as possible:

- **Make certain that the load is secured in the trailer and will not shift during travel. When trailering cargo that is not fully secured, dynamic load shifts can occur that may be difficult for the driver to control. You could lose control of your vehicle and have a collision.**
- **When hauling cargo or towing a trailer, do not overload your vehicle or trailer. Overloading can cause a loss of control, poor performance or damage to brakes, axle, engine, transmission, steering, suspension, chassis structure or tires.**
- **Safety chains must always be used between your vehicle and trailer. Always connect the chains to the hook retainers of the vehicle hitch. Cross the chains under the trailer tongue and allow enough slack for turning corners.**
- **Vehicles with trailers should not be parked on a grade. When parking, apply the parking brake on the tow vehicle. Put the tow vehicle transmission in**

(Continued)

WARNING! *(Continued)*

PARK. For four-wheel drive vehicles, make sure the transfer case is not in NEUTRAL. Always, block or "chock" the trailer wheels.

- **GCWR must not be exceeded.**
- **Total weight must be distributed between the tow vehicle and the trailer such that the following four ratings are not exceeded:**

  1. GVWR

  2. GTW

  3. GAWR

  4. Tongue weight rating for the trailer hitch utilized.

Towing Requirements — Tires

- Do not attempt to tow a trailer while using a compact spare tire.
- Do not drive more than 50 mph (80 km/h) when towing while using a full size spare tire.
- Proper tire inflation pressures are essential to the safe and satisfactory operation of your vehicle. Refer to "Tires" in "Servicing And Maintenance" for proper tire inflation procedures.

- Check the trailer tires for proper tire inflation pressures before trailer usage.
- Check for signs of tire wear or visible tire damage before towing a trailer. Refer to "Tires" in "Servicing And Maintenance" for the proper inspection procedure.
- When replacing tires, refer to "Tires" in "Servicing And Maintenance" for the proper tire replacement procedures. Replacing tires with a higher load carrying capacity will not increase the vehicle's GVWR and GAWR limits.

Towing Requirements — Trailer Brakes

- Do **not** interconnect the hydraulic brake system or vacuum system of your vehicle with that of the trailer. This could cause inadequate braking and possible personal injury.
- An electronically actuated trailer brake controller is required when towing a trailer with electronically actuated brakes. When towing a trailer equipped with a hydraulic surge actuated brake system, an electronic brake controller is not required.
- Trailer brakes are recommended for trailers over 1,000 lbs (453 kg) and required for trailers in excess of 2,000 lbs (907 kg).

WARNING!

- **Do not connect trailer brakes to your vehicle's hydraulic brake lines. It can overload your brake system and cause it to fail. You might not have brakes when you need them and could have an accident.**
- **Towing any trailer will increase your stopping distance. When towing, you should allow for additional space between your vehicle and the vehicle in front of you. Failure to do so could result in an accident.**

CAUTION!

If the trailer weighs more than 1,000 lbs (453 kg) loaded, it should have its own brakes and they should be of adequate capacity. Failure to do this could lead to accelerated brake lining wear, higher brake pedal effort, and longer stopping distances.

Towing Requirements — Trailer Lights And Wiring

Whenever you pull a trailer, regardless of the trailer size, stoplights and turn signals on the trailer are required for motoring safety.

The Trailer Tow Package may include a four- and seven-pin wiring harness. Use a factory approved trailer harness and connector.

NOTE: Do not cut or splice wiring into the vehicle's wiring harness.

The electrical connections are all complete to the vehicle but you must mate the harness to a trailer connector. Refer to the following illustrations.

NOTE:

- Disconnect trailer wiring connector from the vehicle before launching a boat (or any other device plugged into vehicle's electrical connect) into water.
- Be sure to reconnect once clear from water area.

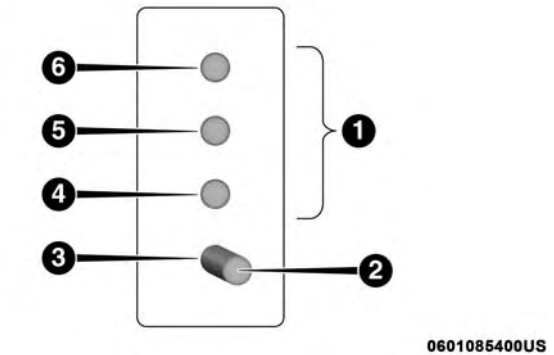

Four-Pin Connector

1 — Female Pins
2 — Male Pin
3 — Ground
4 — Park
5 — Left Stop/Turn
6 — Right Stop/Turn

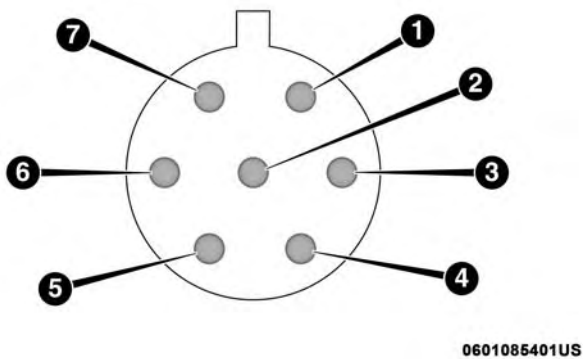

Seven-Pin Connector

1 — Battery
2 — Backup Lamps
3 — Right Stop/Turn
4 — Electric Brakes
5 — Ground
6 — Left Stop/Turn
7 — Running Lamps

Towing Tips

Before setting out on a trip, practice turning, stopping, and backing up the trailer in an area located away from heavy traffic.

Automatic Transmission

Select the DRIVE range when towing. The transmission controls include a drive strategy to avoid frequent shifting when towing. For increased engine braking on steep downhill grades, select the LOW range.

Speed Control — If Equipped

- Do not use on hilly terrain or with heavy loads.
- When using the speed control, if you experience speed drops greater than 10 mph (16 km/h), disengage until you can get back to cruising speed.
- Use speed control in flat terrain and with light loads to maximize fuel efficiency.

Cooling System

To reduce potential for engine and transmission overheating, take the following actions:

City Driving

- In city traffic — while stopped, place the transmission in NEUTRAL, but do not increase engine idle speed.

Highway Driving

- Reduce speed.
- Temporarily turn off air conditioning.

SERVICING AND MAINTENANCE

CONTENTS

■ Scheduled Servicing — Diesel Engine 48
- □ Maintenance Plan — Diesel 49

■ ENGINE COMPARTMENT 52
- □ 3.0L Diesel Engine 52
- □ Checking Oil Level — 3.0 Diesel Engine 53

■ DEALER SERVICE 54
- □ Engine Oil 54
- □ Engine Oil Filter 55
- □ Engine Air Cleaner Filter 55
- □ Draining Fuel/Water Separator Filter 58
- □ Underbody Mounted Fuel Filter Replacement. . . .59
- □ Priming If The Engine Has Run Out Of Fuel 60
- □ Intervention Regeneration Strategy — Message Process Flow 61
- □ Diesel Exhaust Fluid 62
- □ Cooling System 62
- □ Brake System 67

Scheduled Servicing — Diesel Engine

Your vehicle is equipped with an automatic oil change indicator system. The oil change indicator system will remind you that it is time to take your vehicle in for scheduled maintenance.

Based on engine operation conditions, the oil change indicator message will illuminate. This means that service is required for your vehicle. Operating conditions such as frequent short-trips, trailer tow, extremely hot or cold ambient temperatures will influence when the "Oil Change Required" message is displayed. Severe Operating Conditions will cause the change oil message to illuminate more frequently. Have your vehicle serviced as soon as possible, within the next 500 miles (805 km).

Your authorized dealer will reset the oil change indicator message after completing the scheduled oil change. If a scheduled oil change is performed by someone other than your authorized dealer, the message can be reset by referring to the steps described under "Instrument Cluster Display" in "Getting To Know Your Instrument Panel" for further information.

NOTE: Under no circumstances should oil change intervals exceed 10,000 miles (16,000 km) or twelve months, whichever comes first.

Engine Oil Filter Replacement

Residual oil in the housing may spill from the housing when the new filter is installed if the residual oil is not either removed from the housing or enough time has not elapsed to allow the oil to drain back into the engine. When servicing the oil filter on this engine, carefully remove the filter and use a suction gun to remove any residual oil left in the housing or wait about 30 minutes for the oil to drain back into the engine.

Once A Month Or Before A Long Trip:

- Check engine oil level
- Check windshield washer fluid level
- Check the tire inflation pressures and look for unusual wear or damage
- Check the fluid levels of the coolant reservoir, brake master cylinder, and fill as needed
- Check function of all interior and exterior lights

Maintenance Plan — Diesel Fuel Up To B5 Biodiesel

Required Maintenance

Refer to the Maintenance Plans on the following pages for required maintenance.

At Every Oil Change Interval As Indicated By Oil Change Indicator System:
• Change oil and filter.
• Completely fill the Diesel Exhaust Fluid tank.
• Change fuel filter and drain water from fuel filter assembly.
• Rotate the tires. **Rotate at the first sign of irregular wear, even if it occurs before the oil indicator system turns on.**
• Inspect battery and clean and tighten terminals as required.
• Inspect brake pads, shoes, rotors, drums, hoses and park brake.
• Inspect engine cooling system protection and hoses.
• Inspect exhaust system.
• Inspect engine air cleaner if using in dusty or off-road conditions.

At Every Second Oil Change Interval As Indicated By Oil Change Indicator System:
• Change fuel filter.

Mileage or time passed (whichever comes first)	10,000	20,000	30,000	40,000	50,000	60,000	70,000	80,000	90,000	100,000	110,000	120,000	130,000	140,000	150,000
Or Years:	1	2	3	4	5	6	7	8	9	10	11	12	13	14	15
Or Kilometers:	16,000	32,000	48,000	64,000	80,000	96,000	112,000	128,000	144,000	160,000	176,000	192,000	208,000	224,000	240,000
Additional Inspections															
Completely fill the Diesel Exhaust Fluid tank.	X	X	X	X	X	X	X	X	X	X	X	X	X	X	X
Inspect the CV joints.			X			X			X			X			X
Inspect front suspension, tie rod ends, and replace if necessary.		X		X		X		X		X		X		X	
Inspect the front and rear axle fluid, change if using vehicle for police, taxi, fleet, off-road or fre-quent trailer towing.		X		X		X		X		X		X		X	
Inspect the brake linings, parking brake function.		X		X		X		X		X		X		X	
Inspect transfer case fluid.			X			X			X						X
Additional Maintenance															
Replace fuel filter and drain water from the fuel filter assembly. **NOTE:** In states that mandate fuel use of Biodiesel blends greater than 5% (B6-B20) [Example: Minnesota in summer months] oil changes and fuel filter replacements are required every 8,000 miles and should not exceed 6 months.	X	X	X	X	X	X	X	X	X	X	X	X	X	X	X
Replace engine air filter.			X			X			X			X			X
Replace the air conditioning filter.		X		X		X		X		X		X		X	
Flush and replace the engine coolant at 10 years or 150,000 miles (240,000 km) whichever comes first.										X					X

Mileage or time passed (whichever comes first)	10,000	20,000	30,000	40,000	50,000	60,000	70,000	80,000	90,000	100,000	110,000	120,000	130,000	140,000	150,000
Or Years:	1	2	3	4	5	6	7	8	9	10	11	12	13	14	15
Or Kilometers:	16,000	32,000	48,000	64,000	80,000	96,000	112,000	128,000	144,000	160,000	176,000	192,000	208,000	224,000	240,000
Replace accessory drive belt(s).										X					
Change transfer case fluid.												X			

5

WARNING!

- You can be badly injured working on or around a motor vehicle. Do only service work for which you have the knowledge and the right equipment. If you have any doubt about your ability to perform a service job, take your vehicle to a competent mechanic.
- Failure to properly inspect and maintain your vehicle could result in a component malfunction and effect vehicle handling and performance. This could cause an accident.

CAUTION!

In states that mandate fuel use of Biodiesel blends greater than 5% (B6-B20) [Example: Minnesota in summer months]:

- Oil changes are required every 8,000 miles and should not exceed 6 months.
- Replace fuel filter and drain water from fuel filter assembly every oil change, do not exceed 8,000 miles or 6 months.
- If biodiesel greater than 5% (B6-B20) is used per state mandate (example Minnesota in Summer months) the fuel must be used within 15 days by driving (to less than a quarter tank) and filled with fresh diesel fuel. Failure to do so can result in engine damage that is not covered by the New Vehicle Limited Warranty.

ENGINE COMPARTMENT
3.0L Diesel Engine

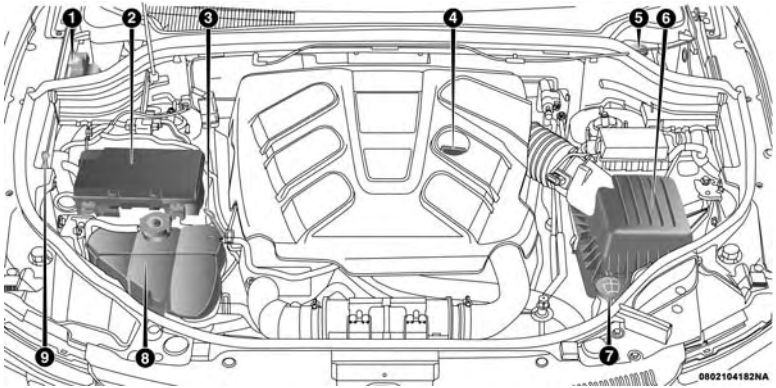

1 — Remote Jump Start Positive Terminal
2 — Power Distribution Center (Fuses)
3 — Engine Oil Dipstick
4 — Engine Oil Fill
5 — Brake Fluid Reservoir
6 — Air Cleaner Filter
7 — Washer Fluid Reservoir
8 — Coolant Pressure Reservoir
9 — Remote Jump Start Negative Terminal

Checking Oil Level — 3.0 Diesel Engine

To assure proper lubrication of your vehicle's engine, the engine oil must be maintained at the correct level. Check the oil level at regular intervals. The best time to check the oil level is before starting the engine after it has been parked overnight. When checking oil after operating the engine, first ensure the engine is at full operating temperature, then wait for five minutes after engine shutdown to check the oil.

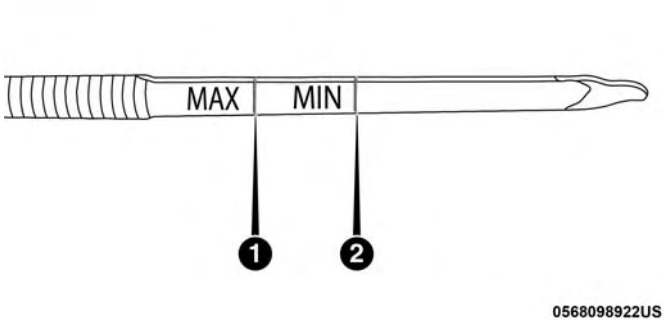

Oil Dipstick

1 — MAX Mark
2 — MIN Mark

Checking the oil while the vehicle is on level ground will improve the accuracy of the oil level readings. Add oil only when the level on the dipstick is below the "MIN" mark. The total capacity from the MIN mark to the MAX mark is 1 qt (1 L).

CAUTION!

Overfilling or underfilling the crankcase will cause oil aeration or loss of oil pressure. This could damage your engine.

NOTE: It is possible for your oil level to be slightly higher than a previous check. This would be due to diesel fuel that may temporarily be in the crankcase due to operation of the diesel particulate filter regeneration strategy. This fuel will evaporate out under normal operation.

Never operate the engine with oil level below the "MIN" mark or above the upper "MAX" mark.

DEALER SERVICE

An authorized dealer has the qualified service personnel, special tools, and equipment to perform all service operations in an expert manner. Service Manuals are available which include detailed service information for your vehicle. Refer to these Service Manuals before attempting any procedure yourself.

NOTE: Intentional tampering with emissions control systems may void your warranty and could result in civil penalties being assessed against you.

WARNING!

You can be badly injured working on or around a motor vehicle. Only do service work for which you have the knowledge and the proper equipment. If you have any doubt about your ability to perform a service job, take your vehicle to a competent mechanic.

Engine Oil

Change Engine Oil — Diesel Engine

Refer to the "Scheduled Servicing" for the proper maintenance intervals.

Diesel Engine Oil Selection

For best performance and maximum protection under all types of operating conditions, the manufacturer recommends engine oils that meet the requirements of FCA Material Standard MS-10902, and that are API CJ-4 certified and meet the requirements of FCA LLC.

Engine Oil Viscosity (SAE Grade) — 3.0L Diesel Engine

CAUTION!

Your vehicle is equipped with an advanced technology Diesel Engine and an emission device designed to limit Diesel Particulate Emissions from being released into the atmosphere. The durability of your engine and life expectancy of this diesel particulate filter emission device is highly dependent on the use of the correct engine oil.

We recommend you use 5W-40 **synthetic** engine oil such as Mopar or Shell Rotella that meets FCA Material Standard MS-10902 and the API CJ-4 engine oil category is required.

Materials Added To Engine Oil

The manufacturer strongly recommends against the addition of any additives (other than leak detection dyes) to the engine oil. Engine oil is an engineered product and its performance may be impaired by supplemental additives.

Disposing Of Used Engine Oil And Oil Filters

Care should be taken in disposing of used engine oil and oil filters from your vehicle. Used oil and oil filters, indiscriminately discarded, can present a problem to the environment. Contact an authorized dealer, service station or governmental agency for advice on how and where used oil and oil filters can be safely discarded in your area.

Engine Oil Filter

The engine oil filter should be replaced with a new filter at every engine oil change.

Engine Oil Filter Selection

This manufacturer's engines have a full-flow type disposable oil filter. Use a filter of this type for replacement. The quality of replacement filters varies considerably. Only high quality filters should be used to assure most efficient service. Mopar engine oil filters are high quality oil filters and are recommended.

Engine Air Cleaner Filter

Refer to the "Maintenance Plan" for the proper maintenance intervals.

CAUTION!

All air entering the engine intake must be filtered. The abrasive particles in unfiltered air will cause rapid wear to engine components.

WARNING!

The air induction system (air cleaner, hoses, etc.) provides a measure of protection. Do not remove the air induction system (air cleaner, hoses, etc.) unless such removal is necessary for repair or maintenance. Make sure that no one is near the engine compartment before starting the vehicle with the air induction system (air cleaner, hoses, etc.) removed. Failure to do so can result in serious personal injury.

CAUTION!

Many aftermarket performance air filter elements do not adequately filter the air entering the engine. Use of such filters can severely damage your engine.

Engine Air Cleaner Filter Selection

The quality of replacement engine air cleaner filters varies considerably. Only high quality filters should be used to assure most efficient service. Mopar engine air cleaner filters are a high quality filter and are recommended.

Air Cleaner Filter Inspection and Replacement — Diesel Engine

Inspect engine air cleaner filter for dirt and or debris, if you find evidence of either dirt or debris you should change your air cleaner filter.

Engine Air Cleaner Filter Removal

1. Release the spring clips from the air cleaner cover.

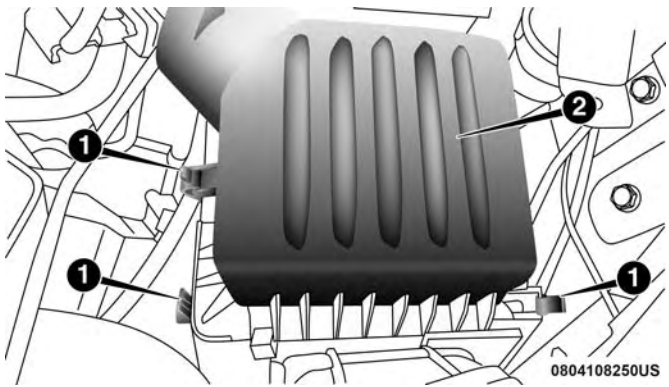

Air Cleaner Filter Cover

1 — Spring Clips
2 — Air Cleaner Filter Cover

2. Lift the air cleaner cover to access the air cleaner filter.

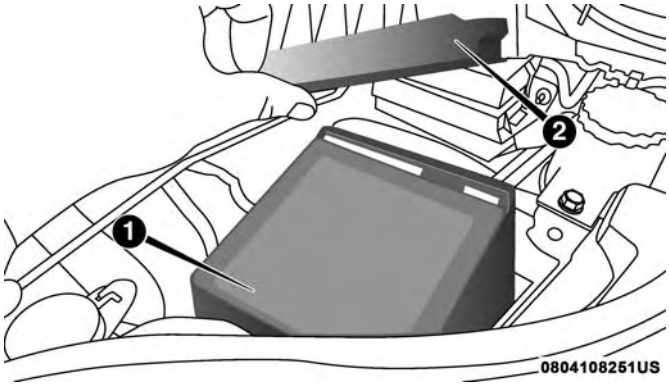

Open Air Cleaner Filter Assembly

1 — Air Cleaner Filter
2 — Air Cleaner Cover

3. Remove the air cleaner filter element from the housing assembly.

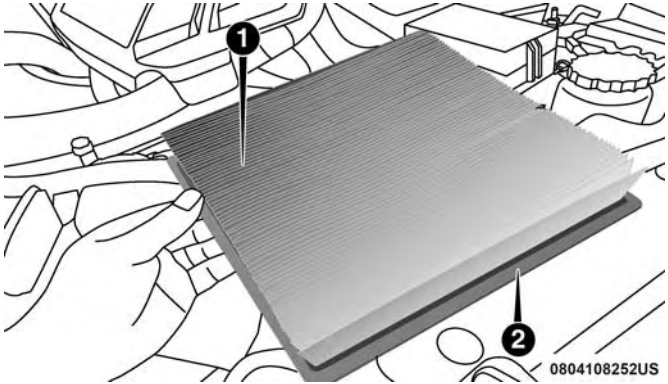

Air Cleaner Filter

1 — Air Cleaner Filter Inspection Surface
2 — Air Cleaner Filter

Engine Air Cleaner Filter Installation

NOTE: Inspect and clean the housing if dirt or debris is present before replacing the air filter element.

1. Install the air cleaner filter element into the housing assembly with the air cleaner filter inspection surface facing downward.

2. Install the air cleaner cover onto the housing assembly locating tabs.
3. Latch the spring clips and lock the air cleaner cover to the housing assembly.

Draining Fuel/Water Separator Filter

The fuel filter/water separator housing is located on the left side of the vehicle in front of the fuel tank. The best access to this water drain valve is from under the vehicle.

CAUTION!

- **Do not drain the fuel/water separator filter when the engine is running.**
- **Diesel fuel will damage blacktop paving surfaces. Drain the filter into an appropriate container.**

If water is detected in the water separator while the engine is running, or while the ignition switch is in the ON position, the "Water In Fuel Indicator Light" will illuminate and an audible chime will be heard. At this point you should stop the engine and drain the water from the filter housing.

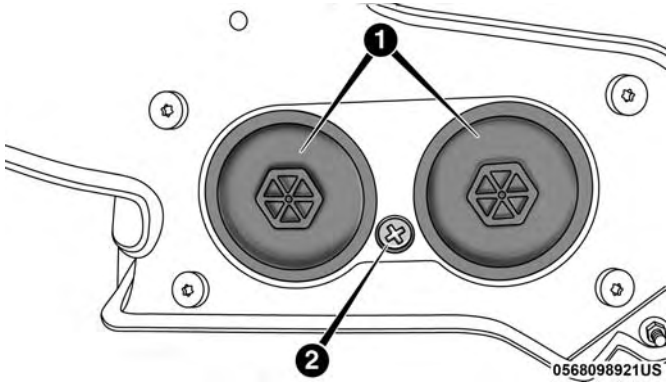

Fuel Filter Assembly

1 — Fuel Filter Access
2 — Water In Fuel Drain

Within 10 minutes of vehicle shutdown, turn the filter drain valve (located on the bottom of the filter housing) counterclockwise to drain fuel/water; allow the accumulated water to drain. Leave the drain valve open until all water and contaminants have been removed. When clear fuel is visible, close the drain valve by turning it clockwise.

Upon proper draining of the water from fuel filter assembly, the "Water In Fuel Indicator Light" will remain illuminated for approximately 10 seconds. If the water was

drained while the engine was running, the "Water In Fuel Indicator Light" may remain on for approximately three minutes.

NOTE: Care should be taken in disposing of used fluids from your vehicle. Used fluids, indiscriminately discarded, can present a problem to the environment. Contact an authorized dealer, service station, or government agency for advice on recycling programs and for where used fluids and filters can be properly disposed of in your area.

If more than two ounces or 60 milliliters of fuel have been drained, follow the directions for "Priming If The Engine Has Run Out Of Fuel."

Underbody Mounted Fuel Filter Replacement

NOTE: Using a fuel filter that does not meet the manufacturer's filtration and water separating requirements can severely impact fuel system life and reliability.

CAUTION!

- **Diesel fuel will damage blacktop paving surfaces. Drain the filter into an appropriate container.**

(Continued)

CAUTION! *(Continued)*

- **Do not prefill the fuel filter when installing a new fuel filter. There is a possibility debris could be introduced into the fuel filter during this action. It is best to install the filter dry and allow the in-tank lift pump to prime the fuel system.**

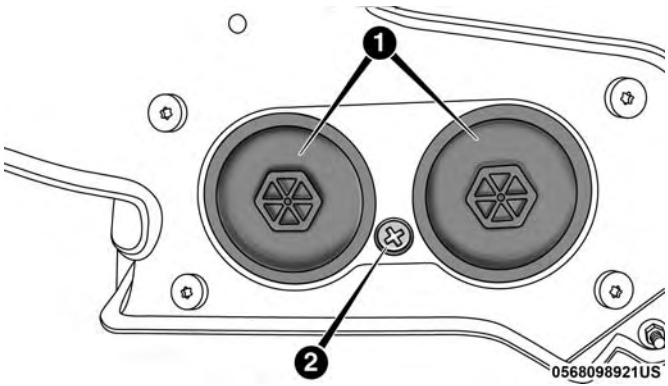

Fuel Filter Assembly

1 — Fuel Filter Access
2 — Water In Fuel Drain

1. Ensure engine is turned off.
2. Place drain pan under the fuel filter assembly.
3. Open the water drain valve, and let any accumulated water and fuel drain.
4. Close the water drain valve.
5. Wipe clean the underside of the filter housing to prevent contamination from entering fuel system during service.
6. Remove using a socket. Rotate counterclockwise for removal.
7. Remove the used filter cartridge from the housing and dispose of according to your local regulations.
8. Wipe clean the sealing surfaces of the lid and housing.

CAUTION!

Take care when handling the new fuel filter to prevent contamination from entering the fuel system.

9. Lubricate o-ring on new filter with clean engine oil.
10. Install the cartridge into the housing with clockwise rotation, use a socket to tighten.
11. Repeat steps 5 through 10 to service second fuel filter in assembly.
12. After engine start, verify the filters do not leak.

Priming If The Engine Has Run Out Of Fuel

WARNING!

Do not open the high pressure fuel system with the engine running. Engine operation causes high fuel pressure. High pressure fuel spray can cause serious injury or death.

1. Add a substantial amount of fuel to the tank, approximately 2 to 5 gal (8L to 19L).
2. Press ignition switch twice without your foot on brake to put vehicle in Run position. This will activate the in tank fuel pump for approximately 30 seconds. Repeat this process twice.
3. Start the engine using the “Normal Starting” procedure. Refer to “Starting The Engine” in “Starting and Operating” for further information.

CAUTION!

The starter motor will engage for approximately 30 seconds at a time. Allow two minutes between cranking intervals.

NOTE: The engine may run rough until the air is forced from all the fuel lines.

WARNING!

Do not use alcohol or gasoline as a fuel blending agent. They can be unstable under certain conditions and be hazardous or explosive when mixed with diesel fuel.

CAUTION!

Due to lack of lubricants in alcohol or gasoline, the use of these fuels can cause damage to the fuel system. Do not start the engine as damage will occur that is not covered by the New Vehicle Limited Warranty.

NOTE:

- In addition, commercially available fuel additives are not necessary for the proper operation of your diesel engine.
- For extreme cold conditions, ″Mopar Premium Diesel Fuel Treatment″ is recommended to assist with cold starting.

Intervention Regeneration Strategy — Message Process Flow

This engine meets all required diesel engine emissions standards. To achieve these emissions standards, your vehicle is equipped with a state-of-the-art engine and exhaust system. These systems are seamlessly integrated into your vehicle and managed by the Powertrain Control Module (PCM). The PCM manages engine combustion to allow the exhaust system's catalyst to trap and burn Particulate Matter (PM) pollutants, with no input or interaction on your part.

Additionally, your vehicle has the ability to alert you to additional maintenance required on your vehicle or engine.

Refer to "Instrument Cluster Display" in "Getting To Know Your Instrument Panel" for further information.

WARNING!

A hot exhaust system can start a fire if you park over materials that can burn. Such materials might be grass or leaves coming into contact with your exhaust system. Do not park or operate your vehicle in areas where your exhaust system can contact anything that can burn.

Diesel Exhaust Fluid

Diesel Exhaust Fluid (DEF) sometimes known simply by the name of its active component, UREA—is a key component of selective catalytic reduction (SCR) systems, which help diesel vehicles meet stringent emission regulations. DEF is a liquid reducing agent that reacts with engine exhaust in the presence of a catalyst to convert smog-forming nitrogen oxides (NOx) into harmless nitrogen and water vapor.

Refer to "Fluids And Lubricants" in "Technical Specifications" for further information.

Cooling System

WARNING!

- **You or others can be badly burned by hot engine coolant (antifreeze) or steam from your radiator. If you see or hear steam coming from under the hood, do not open the hood until the radiator has had time to cool. Never open a cooling system pressure cap when the radiator or coolant bottle is hot.**
- **Keep hands, tools, clothing, and jewelry away from the radiator cooling fan when the hood is raised. The fan starts automatically and may start at any time, whether the engine is running or not.**
- **When working near the radiator cooling fan, disconnect the fan motor lead or turn the ignition to the OFF mode. The fan is temperature controlled and can start at any time the ignition is in the ON mode.**

Engine Coolant Checks

Check the engine coolant (antifreeze) protection every 12 months (before the onset of freezing weather, where applicable). If the engine coolant (antifreeze) is dirty, the system should be drained, flushed, and refilled with fresh OAT coolant (conforming to MS.90032) by an authorized dealer.

Check the front of the A/C condenser for any accumulation of bugs, leaves, etc. If dirty, clean by gently spraying water from a garden hose vertically down the face of the condenser.

Check the engine cooling system hoses for brittle rubber, cracking, tears, cuts, and tightness of the connection at the coolant recovery bottle and radiator. Inspect the entire system for leaks. DO NOT REMOVE THE COOLANT PRESSURE CAP WHEN THE COOLING SYSTEM IS HOT.

Cooling System — Drain, Flush And Refill

NOTE: Some vehicles require special tools to add coolant properly. Failure to fill these systems properly could lead to severe internal engine damage. If any coolant is needed to be added to the system please contact an authorized dealer.

If the engine coolant (antifreeze) is dirty or contains visible sediment, have an authorized dealer clean and flush with OAT coolant (antifreeze) (conforming to MS.90032).

Refer to the "Maintenance Plan" in this section for the proper maintenance intervals.

Selection Of Coolant

Refer to "Fluids And Lubricants" in "Technical Specifications" for further information.

NOTE:

- Mixing of engine coolant (antifreeze) other than specified Organic Additive Technology (OAT) engine coolant (antifreeze), may result in engine damage and may decrease corrosion protection. Organic Additive Technology (OAT) engine coolant is different and should not be mixed with Hybrid Organic Additive Technology (HOAT) engine coolant (antifreeze) or any "globally compatible" coolant (antifreeze). If a non-OAT engine coolant (antifreeze) is introduced into the cooling system in an emergency, the cooling system will need to be drained, flushed, and refilled with fresh OAT coolant (conforming to MS.90032), by an authorized dealer as soon as possible.
- Do not use water alone or alcohol-based engine coolant (antifreeze) products. Do not use additional rust inhibitors or antirust products, as they may not be compatible with the radiator engine coolant and may plug the radiator.

- This vehicle has not been designed for use with propylene glycol-based engine coolant (antifreeze). Use of propylene glycolbased engine coolant (antifreeze) is not recommended.
- Some vehicles require special tools to add coolant properly. Failure to fill these systems properly could lead to severe internal engine damage. If any coolant is needed to be added to the system please contact an authorized dealer.

Adding Coolant

Your vehicle has been built with an improved engine coolant (OAT coolant conforming to MS.90032) that allows extended maintenance intervals. This engine coolant (antifreeze) can be used up to ten years or 150,000 miles (240,000 km) before replacement. To prevent reducing this extended maintenance period, it is important that you use the same engine coolant (OAT coolant conforming to MS.90032) throughout the life of your vehicle.

Please review these recommendations for using Organic Additive Technology (OAT) engine coolant (antifreeze) that meets the requirements of FCA Material Standard MS.90032. When adding engine coolant (antifreeze):

- We recommend using Mopar Antifreeze/Coolant 10 Year/150,000 Mile (240,000 km) Formula OAT (Organic Additive Technology) that meets the requirements of FCA Material Standard MS.90032.
- Mix a minimum solution of 50% OAT engine coolant that meets the requirements of FCA Material Standard MS.90032 and distilled water. Use higher concentrations (not to exceed 70%) if temperatures below −34°F (−37°C) are anticipated. Please contact an authorized dealer for assistance.
- Use only high purity water such as distilled or deionized water when mixing the water/engine coolant (antifreeze) solution. The use of lower quality water will reduce the amount of corrosion protection in the engine cooling system.

NOTE:

- It is the owner's responsibility to maintain the proper level of protection against freezing according to the temperatures occurring in the area where the vehicle is operated.
- Some vehicles require special tools to add coolant properly. Failure to fill these systems properly could lead to severe internal engine damage. If any coolant is needed to be added to the system, please contact a local authorized dealer.
- Mixing engine coolant (antifreeze) types is not recommended and can result in cooling system damage. If HOAT and OAT coolant are mixed in an emergency, have a authorized dealer drain, flush, and refill with OAT coolant (conforming to MS.90032) as soon as possible.

Cooling System Pressure Cap

The cap must be fully tightened to prevent loss of engine coolant (antifreeze), and to ensure that engine coolant (antifreeze) will return to the radiator from the coolant expansion bottle/recovery tank if so equipped.

The cap should be inspected and cleaned if there is any accumulation of foreign material on the sealing surfaces.

WARNING!

- **Do not open hot engine cooling system. Never add engine coolant (antifreeze) when the engine is overheated. Do not loosen or remove the cap to cool an overheated engine. Heat causes pressure to build up in the cooling system. To prevent scalding or injury, do not remove the pressure cap while the system is hot or under pressure.**
- **Do not use a pressure cap other than the one specified for your vehicle. Personal injury or engine damage may result.**

Disposal Of Used Coolant

Used ethylene glycol-based coolant (antifreeze) is a regulated substance requiring proper disposal. Check with your local authorities to determine the disposal rules for your community. To prevent ingestion by animals or children, do not store ethylene glycol-based coolant in open containers or allow it to remain in puddles on the ground. If ingested by a child or pet, seek emergency assistance immediately. Clean up any ground spills immediately.

Coolant Level

The coolant bottle provides a quick visual method for determining that the coolant level is adequate. With the engine OFF and cold, the level of the engine coolant (antifreeze) in the bottle should be between the ranges indicated on the bottle.

The radiator normally remains completely full, so there is no need to remove the radiator/coolant pressure cap unless checking for engine coolant (antifreeze) freeze point or replacing coolant. Advise your service attendant of this. As long as the engine operating temperature is satisfactory, the coolant bottle need only be checked once a month.

When additional engine coolant (antifreeze) is needed to maintain the proper level, only OAT coolant that meets the requirements of FCA Material Standard MS.90032 should be added to the coolant bottle. Do not overfill.

Points To Remember

NOTE: When the vehicle is stopped after a few miles/kilometers of operation, you may observe vapor coming from the front of the engine compartment. This is normally a result of moisture from rain, snow, or high humidity accumulating on the radiator and being vaporized when the thermostat opens, allowing hot engine coolant (antifreeze) to enter the radiator.

If an examination of your engine compartment shows no evidence of radiator or hose leaks, the vehicle may be safely driven. The vapor will soon dissipate.

- Do not overfill the coolant expansion bottle.
- Check the coolant freeze point in the radiator and in the coolant expansion bottle. If engine coolant (antifreeze) needs to be added, the contents of the coolant expansion bottle must also be protected against freezing.
- If frequent engine coolant (antifreeze) additions are required, the cooling system should be pressure tested for leaks.

- Maintain engine coolant (antifreeze) concentration at a minimum of 50% OAT coolant (conforming to MS.90032) and distilled water for proper corrosion protection of your engine which contains aluminum components.
- Make sure that the coolant expansion bottle overflow hoses are not kinked or obstructed.
- Keep the front of the radiator clean. If your vehicle is equipped with air conditioning, keep the front of the condenser clean.
- Do not change the thermostat for Summer or Winter operation. If replacement is ever necessary, install ONLY the correct type thermostat. Other designs may result in unsatisfactory engine coolant (antifreeze) performance, poor gas mileage, and increased emissions.

Brake System

In order to assure brake system performance, all brake system components should be inspected periodically. Refer to the "Maintenance Plan" in this section for the proper maintenance intervals.

WARNING!

Riding the brakes can lead to brake failure and possibly a collision. Driving with your foot resting or riding on the brake pedal can result in abnormally high brake temperatures, excessive lining wear, and possible brake damage. You would not have your full braking capacity in an emergency.

TECHNICAL SPECIFICATIONS

CONTENTS

- FUEL REQUIREMENTS 70
  - Diesel Fuel Specifications 71
  - Biodiesel Fuel Requirements 71
- FLUID CAPACITIES 74
- FLUIDS AND LUBRICANTS 75
  - Engine 75
  - Chassis 77

FUEL REQUIREMENTS

CAUTION!

- **Use of Biodiesel Blends greater than 5% is not approved. Use of blends greater than 20% can result in engine damage. Such damage is not covered by the New Vehicle Limited Warranty.**
- **If biodiesel greater than 5% (B6-B20) is used per state mandate (example Minnesota in Summer months) the fuel must be used within 15 days by driving (to less than a quarter tank) and filled with fresh diesel fuel. Failure to do so can result in engine damage that is not covered by the New Vehicle Limited Warranty.**

Federal law requires that you must fuel this vehicle with Ultra Low Sulfur Highway Diesel fuel (15 ppm Sulfur maximum) and prohibits the use of Low Sulfur Highway Diesel fuel (500 ppm Sulfur maximum) to avoid damage to the emissions control system.

Use good quality diesel fuel from a reputable supplier in your vehicle. For most year-round service, No. 2 diesel fuel meeting ASTM (formerly known as the American Society for Testing and Materials) specification D-975 Grade S15 will provide good performance. If the vehicle is exposed toextreme cold (below 20°F or -7°C), or is required to operate at colder-than-normal conditions for prolonged periods, use climatized No. 2 diesel fuel or dilute the No. 2 diesel fuel with 50% No. 1 diesel fuel. This will provide better protection from fuel gelling or wax-plugging of the fuel filters.

WARNING!

Do not use alcohol or gasoline as a fuel blending agent. They can be unstable under certain conditions and hazardous or explosive when mixed with diesel fuel.

Diesel fuel is seldom completely free of water. To prevent fuel system trouble, drain the accumulated water from the fuel/water separator using the fuel/water separator drain provided on the fuel filter housing. If you buy good quality fuel and follow the cold weather advice above, fuel conditioners should not be required in your vehicle. If available in your area, a high cetane “premium” diesel fuel may offer improved cold-starting and warm-up performance.

CAUTION!

If the "Water in Fuel Indicator Light" remains on, DO NOT START engine before you drain the water from the fuel filter(s) to avoid engine damage. Refer to "Draining Fuel/Water Separator Filter" in "Servicing And Maintenance" for further information.

Diesel Fuel Specifications

This diesel engine has been developed to take advantage of the high energy content and generally lower cost No. 2 Ultra Low Sulfur diesel fuel or No. 2 Ultra Low Sulfur climatized diesel fuels.

NOTE:

- If you accidentally fill the fuel tank with gasoline on your diesel vehicle, do not start the engine. Damage to the engine and fuel system could occur. Please call an authorized dealer for service.
- A maximum blend of 5% biodiesel meeting ASTM specification D-975 may be used with your diesel engine without any adjustments to regular service schedules.
- Commercially available fuel additives are not necessary for the proper operation of your diesel engine.
- No. 1 Ultra Low Sulfur diesel fuel should only be used where extended arctic conditions (-10°F or -23°C) exist.

Biodiesel Fuel Requirements

A maximum blend of 5% biodiesel meeting ASTM specification D975 is recommended for use with your diesel engine.

Biodiesel is a fuel produced from renewable resources typically derived from animal fat, rapeseed oil (Rapeseed Methyl Ester (RME) base), or soybean oil (Soy Methyl Ester (SME or SOME) base).

CAUTION!

In the event that the vehicle is filled with fuel containing greater than 5% biodiesel (B6-B20), the fuel must be used within 15 days by driving (to less than a quarter tank) and filled with fresh diesel fuel. Failure to do so can result in engine damage that is not covered by the New Vehicle Limited Warranty.

% Biodiesel	Customer View	Pump Required Label
0-5% (B5) Acceptable For Use	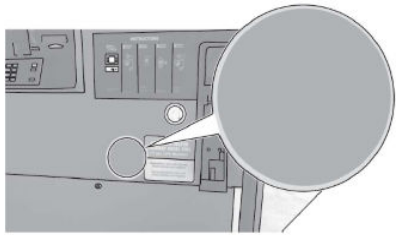	No Label Required
6–20% (B6–B20) **DO NOT USE** except in states requiring B20 sale (e.g. Minnesota in Summer months) **NOTE:** Refer to Fuel Requirements - Diesel Engine for further information.	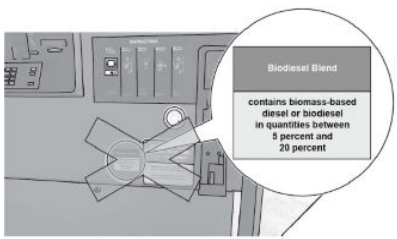	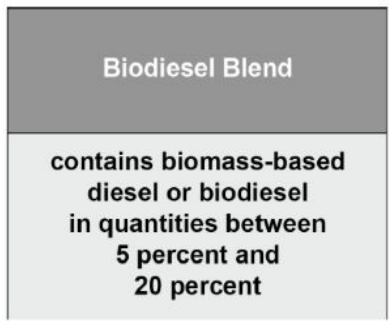

% Biodiesel	Customer View	Pump Required Label
>21% (B21) **DO NOT USE**	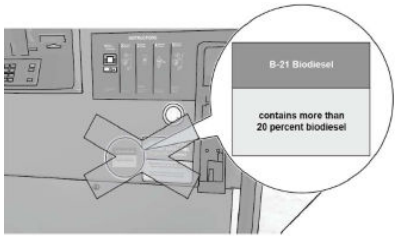	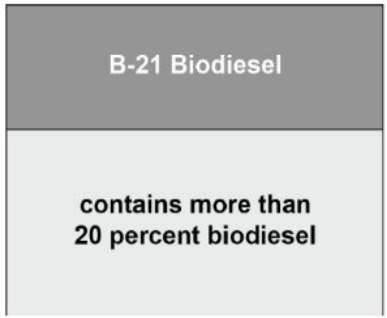

Biodiesel Fuel Properties — Low Ambient Temperatures

Biodiesel fuel may gel or solidify at low ambient temperatures, which may pose problems for both storage and operation. Precautions can be necessary at low ambient temperatures, such as storing the fuel in a heated building or a heated storage tank, or using cold temperature additives.

Fuel Quality — Must Comply With ASTM Standards

The quality of Biodiesel fuel may vary widely. Only fuel produced by a BQ9000 supplier to the following specifications may be blended to meet Biodiesel blend B6 – B20 fuel meeting ASTM specification D-7467:

- Petrodiesel fuel meeting ASTM specification D-975 and Biodiesel fuel (B100) meeting ASTM specification D-6751

Fuel Oxidation Stability — Must Use Fuel Within Six Months Of Manufacture

Biodiesel fuel has poor oxidation stability which can result in long term storage problems. Fuel produced to approved ASTM standards, if stored properly, provides for protection against fuel oxidation for up to six months.

Fuel Water Separation — Must Use Mopar Approved Fuel Filter Elements

Biodiesel fuel has a natural affinity to water and water accelerates microbial growth. Your Mopar filtration system is designed to provide adequate fuel water separation capabilities.

Fuel In Oil Dilution — Must Adhere To Required Oil Change Interval

Fuel dilution of lubricating oil has been observed with the use of Biodiesel fuel. Fuel in oil must not exceed 5%. To ensure this limit is met your oil change interval must be maintained with in the suggested schedule.

Biodiesel Fuel Filter Change Intervals

NOTE: Use only maximum blends of Biodiesel 5%.

FLUID CAPACITIES

	U.S.	Metric
Fuel (Approximate)		
3.0L Diesel Engine	24.6 Gallons	93.1 Liters
Diesel Exhaust Fluid Tank	8 Gallons	30.3 Liters
Engine Oil With Filter		
3.0 Liter Diesel Engine (SAE 5W-40 Synthetic, API CJ-4)	8 Quarts	7.7 Liters
Cooling System		
3.0L Turbo Diesel Engine (Mopar Engine Coolant/Antifreeze 10 Year/ 150,000 Mile Formula OAT (Organic Additive Technology))	12 Quarts	11.4 Liters

FLUIDS AND LUBRICANTS

Engine

Component	Fluid, Lubricant, or Genuine Part
Engine Coolant	We recommend you use Mopar Antifreeze/Coolant 10 Year/150,000 Mile Formula OAT (Organic Additive Technology).
Engine Oil	We recommend you use 5W-40 **synthetic** engine oil such as Mopar or Shell Rotella that meets FCA Material Standard MS-10902 and the API CJ-4 engine oil category is required.
Engine Oil Filter	We recommend you use Mopar Engine Oil Filters.
Fuel Filters	We recommend you use Mopar Fuel Filter. Must meet 3 micron rating. **Using a fuel filter that does not meet the manufacturers filtration and water separating requirements can severely impact fuel system life and reliability.**

Component	Fluid, Lubricant, or Genuine Part
Fuel Selection	Use good quality diesel fuel from a reputable supplier in your vehicle. Federal law requires that you must fuel this vehicle with Ultra Low Sulfur Highway Diesel fuel (15 ppm Sulfur maximum) and prohibits the use of Low Sulfur Highway Diesel fuel (500 ppm Sulfur maximum) to avoid damage to the emissions control system. We require you to use diesel with up to a maximum blend of 5% biodiesel (B5), meeting ASTM spec D-975 with your diesel engine. If biodiesel greater than 5% (B6-B20) is used per state mandate (example Minnesota in Summer months) the fuel must be used within 15 days by driving (to less than a quarter tank) and filled with fresh diesel fuel.
Diesel Exhaust Fluid	Mopar Diesel Exhaust Fluid (API Certified) (DEF) or equivalent that has been API Certified to the ISO 22241 standard. Use of fluids not API Certified to ISO 22241 may result in system damage.

NOTE: If the vehicle is exposed to extreme cold (below 20°F or -7°C), or is required to operate at colder-than-normal conditions for prolonged periods, use climatized No. 2 diesel fuel or dilute the No. 2 diesel fuel with 50% No. 1 diesel fuel. This will provide better protection from fuel gelling or wax-plugging of the fuel filters.

Chassis

Component	Fluid, Lubricant, or Genuine Part
Automatic Transmission	Use only Mopar ZF 8&9 Speed ATF Automatic Transmission Fluid, or equivalent. Failure to use the correct fluid may affect the function or performance of your transmission.
Transfer Case – Single-Speed (Quadra-Trac I)	We recommend you use Shell Automatic Transmission Fluid 3353.
Transfer Case – Two-Speed (Quadra-Trac II)	We recommend you use Mopar ATF+4 Automatic Transmission Fluid.
Axle Differential (Front)	We recommend you use Mopar GL-5 Synthetic Axle Lubricant SAE 75W-85.
Axle Differential (Rear) – With Electronic Limited-Slip Differential (ELSD)	We recommend you use Mopar GL-5 Synthetic Axle Lubricant SAE 75W-85 with friction modifier additive.
Axle Differential (Rear) – Without Electronic Limited-Slip Differential (ELSD)	We recommend you use Mopar GL-5 Synthetic Axle Lubricant SAE 75W-85.
Brake Master Cylinder	We recommend you use Mopar DOT 3 Brake Fluid, SAE J1703 should be used.

INDEX

Adding Engine Coolant (Antifreeze) 64
Adding Fuel 30
Air Cleaner, Engine (Engine Air Cleaner Filter) 55
Air Conditioning Filter 56
Antifreeze (Engine Coolant) 63, 74
  Disposal 65
Automatic Transmission
  Fluid Type 77
Axle Fluid 77

Brake Fluid. 77
Brake System 67

Capacities, Fluid 74
Caps, Filler
  Oil (Engine) 52, 54
  Radiator (Coolant Pressure) 65
Cooling Pressure Cap (Radiator Cap) 65
Cooling System. 62
  Adding Coolant (Antifreeze) 64
  Coolant Level 66
  Cooling Capacity 74
  Disposal Of Used Coolant 65
  Drain, Flush, And Refill 63
  Inspection 62, 66
  Points To Remember 66
  Pressure Cap 65
  Radiator Cap 65
  Selection Of Coolant (Antifreeze) 63, 74, 75

Dealer Service. 54
Diesel Fuel 70
Diesel Fuel Requirements. 70
  Bulk Storage Of 33
Diesel Fuel System, Re-Priming 60
Dipsticks
  Oil (Engine) 53
Disposal
  Antifreeze (Engine Coolant) 65
Draining Fuel/Water Separator Filter 58

Engine 52
  Air Cleaner 55
  Block Heater 23, 25
  Checking Oil Level 53
  Compartment 52
  Compartment Identification 52
  Coolant (Antifreeze) 75
  Cooling 62
  Idling 28

Oil 54, 74, 75
Oil Filler Cap 52, 54
Oil Filter 55
Oil Selection 74

Filters
Air Cleaner 55
Air Conditioning 56
Engine Fuel 58
Engine Oil 55, 75
Engine Oil Disposal 55
Fluid, Brake 77
Fluid Capacities 74
Fluids And Lubricants 75
Fuel 70
Adding 30
Diesel 75
Filter 58
Requirements 70
Specifications 71
Tank Capacity 74
Fueling 30

Gauges
Voltage 26
Gross Axle Weight Rating 37
Gross Vehicle Weight Rating. 37

Hitches
Trailer Towing 39

Instrument Cluster 12
Display 14
Intervention Regeneration Strategy 61

Maintenance Schedule 48

New Vehicle Break-In Period 25

Oil, Engine 54, 75
Capacity 74
Change Interval 54
Checking 53
Dipstick 53
Disposal 55
Filter 55, 75
Filter Disposal 55
Materials Added To 55
Recommendation 54, 74
Viscosity 54, 74

Oil Filter, Change 55
Oil Filter, Selection 55

Radiator Cap (Coolant Pressure Cap) 65
Remote Control
  Starting System 8
Remote Starting System. 8

Schedule, Maintenance 48
Selection Of Coolant (Antifreeze) 75
Spark Plugs 75
Starting 22
  Automatic Transmission 23
  Engine Block Heater 23, 25
  Remote 8
Starting Procedures 22
Starting Procedures (Diesel Engines) 22
System, Remote Starting 8

Tires
  Trailer Towing 42
Tongue Weight/Trailer Weight 40
Towing. 37
  Guide 40
  Weight 40
Trailer Towing 37
  Cooling System Tips 46
  Hitches 39
  Minimum Requirements 41
  Tips 46
  Trailer And Tongue Weight 40
  Wiring 44
Trailer Towing Guide. 40
Trailer Weight. 40
Transfer Case
  Fluid 77
Transmission
  Fluid 77

Viscosity, Engine Oil 54

Water Separator
  Diesel Fuel 58

Original Owner's Name

Street Address

City and State Zip Code

Vehicle Identification Number

Warranty Start Date (In-Service Date) Mileage at Delivery

Selling Dealer Code

City State

Second Owner's Name

Street Address

City and State Zip Code

Date of Second Purchase Mileage at Purchase

Third Owner's Name

Street Address

City and State Zip Code

Date of Third Purchase Mileage at Purchase

Warranty coverage applies to all vehicle owners. To protect you in the event of a recall or any questions concerning your warranty, please tell your dealer about any ownership or address change, and write the details here.



19WK-226-AA
©2024 FCA US LLC. All Rights Reserved.
Jeep is a registered trademark of FCA US LLC.

First Edition V1
Printed in the U.S.A.