get started

INSTANT POT® **INSTANTCHILL™**
ICE CREAM MAKER

USER MANUAL

Instant Pot®

Welcome

to your new Instant Pot® InstantChill™ Ice Cream Maker. You're officially minutes away from fresh ice cream.

This manual will walk you through the basics of your product and help you get started. For additional support, scan the QR code below to access step-by-step assembly guidance, setup tips, troubleshooting help, FAQs, recipes, and inspiration designed specifically for InstantChill.



Still having questions or trouble with your InstantChill™?
Our Customer Care team is ready to help.

- Contact us at support@instantpot.com
- Call 800-828-7280 Monday-Friday from 10:00 AM-6:00 PM ET
- Connect with us via live chat 24/7 through www.instantpot.com.

We'll work with you to make it right!

⚠WARNING

Before using your new appliance, read all instructions, including the Important Safeguards. **Failure to follow the safeguards and instructions may result in personal injury and/or property damage.**

CONTENTS

Important safeguards	2
What's in the box	6
Using the Control Panel	7
Getting started	8
Using the mixing bowl	9
Using the lid	11
Smart Programs	14
Changing settings	22
Recipes	24
Cleaning and Storing	32
Troubleshooting	34
Error Codes	36
Replacement Parts and Accessories	37
Learn more	38
Warranty	39

⚠ IMPORTANT SAFEGUARDS

⚠WARNING

Failure to follow safety instructions may result in personal injury and/or property damage and may void your warranty.

READ ALL INSTRUCTIONS

Before using your new appliance, please read all instructions, including the Safety Information below. Keep this manual for reference.

General Safety

- **DO** make sure all parts are dry and free of food or any debris before placing mixing bowl on the base and before use.
- **DO** place the appliance on a countertop only. Always operate the appliance on a stable, non-combustible, level surface.
- **DO NOT** place the appliance or power cord on or close to a gas or electric stovetop or oven. **NEVER** use the appliance on your stove.

Installation and Placement

- **WARNING:** Keep ventilation openings, in the appliance enclosure or in the built-in structure, clear of obstruction.
- **DO** use or store the appliance in the upright position and level, to avoid problems with the cooling system.
- **DO** make sure that there is at least 4 inches of space around all sides of the appliance to allow for air venting.
- **DO NOT** use the appliance near water, an external heat source or flame.
- **DO NOT** use outdoors. Keep out of direct sunlight.
- **DO NOT** place on anything that may block the vents on the bottom of the appliance.
- **DO NOT** store explosive substances such as aerosol cans with a flammable propellant in this appliance.

⚠WARNING

Use and Operation

- **DO** keep hands and utensils out of the mixing bowl while a program is in operation, since the Churning Paddles can be operating, which can damage both the utensils and Paddles, or cause physical harm to hands.
- **DO** use only the Instant Pot lids that came with this base. Using any other lids may cause personal injury and/or property damage.
- **DO** use only accessories or attachments authorized by Instant Pot Brands. The use of parts, accessories or attachments not recommended by the manufacturer may cause a risk of electric shock or other personal injury, fire and/or property damage.
- **DO NOT** move the appliance while it is in use.
- **DO NOT** allow children or persons with reduced physical, sensory or mental capabilities or lack of experience and knowledge to operate this appliance. Close supervision is necessary when any appliance is used by or near children and persons with reduced physical, sensory or mental capabilities. Children should not play with this appliance.
- **DO NOT** use the appliance for anything other than household and similar applications only. It must not be used for commercial purposes or in environments other than the home.
- **DO NOT** leave the appliance unattended while in use.
- **DO NOT** use sharp objects or utensils inside the mixing bowl, to avoid scratching the inside of the bowl.
- **DO NOT** operate the appliance with an external timer or any type of remote control device to avoid risk of damage to the cooling and electrical systems.
- **DO NOT** use any heating or mechanical means to defrost the appliance.
- **DO NOT** use the included accessories in a microwave, toaster oven, convection or conventional oven, on a ceramic, electric or gas cooktop, or with an outdoor grill.
- **WARNING:** Do not use mechanical devices or other means to accelerate the defrosting process, other than those recommended by the manufacturer.
- **WARNING:** Do not damage the refrigerant circuit.
- **WARNING:** Do not use electrical appliances inside the food storage compartments of the appliance, unless they are of the type recommended by the manufacturer.

⚠WARNING

Cleaning and Maintenance

- **DO** let the appliance warm to room temperature before cleaning or storage.
- **DO NOT** store any materials, other than the mixing bowl, on the base when not in use to avoid risk of damage to the cooling and electrical systems.
- **DO** only store the appliance in the upright position on its feet to avoid risk of damage to the cooling system.
- This appliance contains flammable refrigerant and flammable insulation blowing gas. Disposal of the appliance must be performed in accordance with local, state, or federal regulations, and only by qualified personnel or authorized recycling facilities.
- **DO NOT** cut, pierce, or crush the refrigerant circuit or insulated panels. Improper handling may result in fire, explosion, or environmental harm.
- Contact your local waste authority or certified appliance recycler for proper collection and disposal procedures.

Power Cord

A short power-supply cord is used to reduce the hazards resulting from grabbing, entanglement or tripping. The electrical supply cord cannot be replaced. If the cord is damaged, the appliance should be discarded.

- **DO** keep appliance and power cord away from children.
- **DO NOT** let the power cord hang over edges of tables or counters to avoid the risk of product damage and/or personal injury.
- **DO NOT** let the power cord touch hot surfaces or open flame, including a stovetop.
- **DO NOT** use below-counter power outlets to avoid the risk of product damage and/or personal injury.
- **DO NOT** use with extension cords, power converters or adapters, timer switches or separate remote-control systems to avoid the risk of product damage and/or personal injury.

This appliance has a 3-prong grounding plug. To reduce the risk of electric shock:

- **ONLY** plug the power cord into a grounded electrical outlet.
- **DO NOT** remove the grounding prong on the electrical plug.

⚠WARNING

Electrical Safety

The base contains electrical components that are an electrical shock hazard. **Failure to follow these instructions may result in electric shock and/or death.**

To protect against electrical shock:

- To disconnect, select **Cancel**, then remove plug from power source. Always unplug when not in use, as well as before adding or removing parts or accessories, and before cleaning. To unplug, grasp the plug and pull from the outlet. **NEVER** pull from the power cord.
- **DO** regularly inspect the appliance and power cord for any signs of damage or fraying.
- **DO NOT** operate the appliance if the power cord or plug is damaged, or after the appliance malfunctions or is dropped or damaged in any manner. For assistance, contact Consumer Care by email at **support@instantpot.com**.
- If the power cord is damaged, it must be replaced by the manufacturer, its service agent or similarly qualified persons in order to avoid a hazard.
- **DO NOT** attempt to repair, replace or modify components of the appliance, as this may cause electric shock or other personal injury, fire and/or property damage, and will void the warranty. For assistance, contact Consumer Care by email at **support@instantpot.com**.
- **DO NOT** tamper with any of the safety mechanisms, as this may result in personal injury and/or property damage.
- **DO NOT** immerse the power cord, plug or the appliance in water or other liquid.
- **DO NOT** clean the appliance by rinsing it under a faucet.
- **DO NOT** use the appliance in electrical systems other than 120 V ~ 60 Hz for North America.

SAVE THESE INSTRUCTIONS

⚠WARNING

Failure to follow safety instructions may result in personal injury and/or property damage and may void your warranty.

WHAT'S IN THE BOX

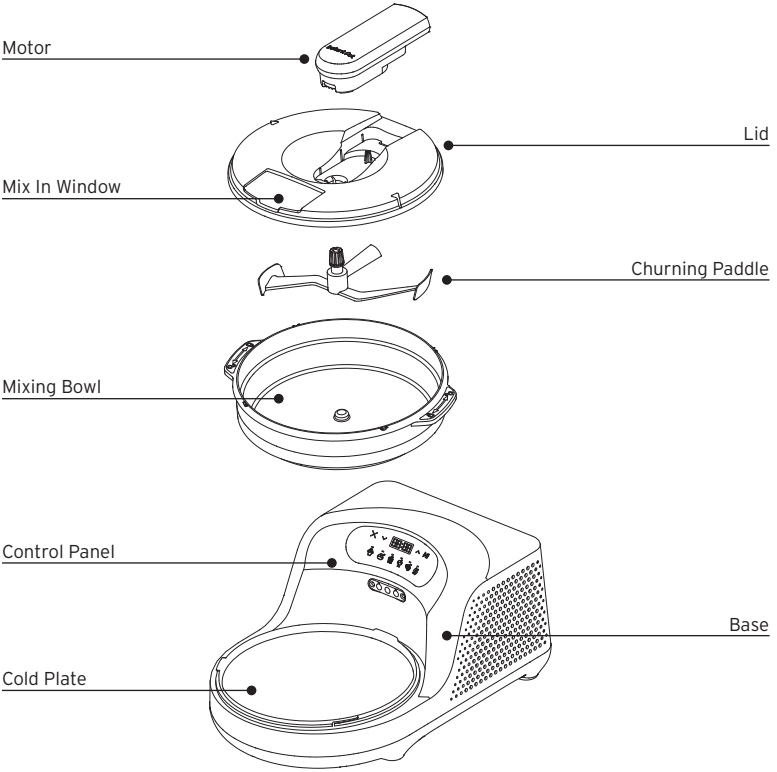

Accessories

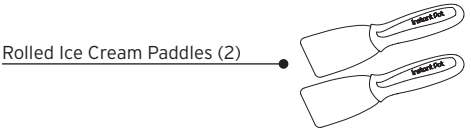

Illustrations are for reference only and may differ from the actual product.

Remember to recycle!

We designed this packaging with sustainability in mind. Please recycle everything that can be recycled where you live.

USING THE CONTROL PANEL

Control panel

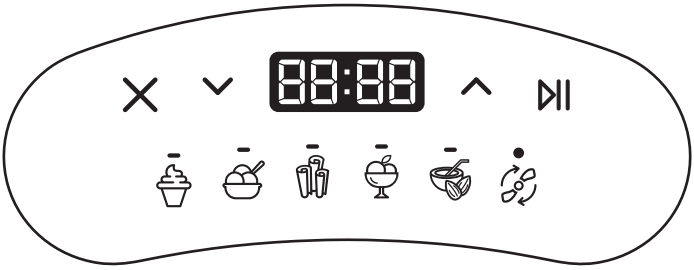

Control Panel buttons and indicators

Smart Programs

Ice Cream	Gelato	Rolled Ice Cream
A rich, creamy dessert made from cream, milk, sugar, and often egg yolks, with a smooth texture.	Lower in fat and churned more slowly, for a dense, silky texture with more intense flavors.	A fun treat made by freezing a sweet milk base on the Cold Plate and rolling it into thin spirals.
Sorbet	**Non-Dairy**	**Mix**
A dairy-free, fruit-based frozen dessert that is sweet, refreshing, with pure fruit flavor.	Made from plant-based milks (coconut, oat, almond, soy) with a creamy texture and flavor.	Add mix-ins, re-mix a finished recipe, or pre-mix ingredients.

Controls

Cancel	Decrease	Message display	Increase	Start/Pause
		88:88		

GETTING STARTED

Unpack

1. Unpack all of the parts and remove each part from its wrapping.
2. Separate the Motor Housing and Churning Paddle from the Lid for cleaning. See details on page 11.

Clean

1. Wash the Mixing Bowl, Lid (remove the Motor), Churning Paddle, Rolled Ice Cream Paddles, with hot water and soap. Rinse and dry completely with a soft cloth.
2. Wipe down the Cold Plate with warm soapy water. Wipe the Base with a soft cloth to ensure there are no stray packaging particles.

   ⚠ Do not wash the Motor, and make sure it doesn't get wet. Do not get the Base wet or submerge in water.

Place and rest

1. Place the Base on a solid, non-flammable surface. The base is heavier in the rear, due to the compressor, so use care when moving.
2. Let the Base rest in the upright position for at least 2 hours, to allow the cooling materials to settle to avoid damage or reduced performance.

Plug in

1. Plug the cord into an electrical outlet. The display lights.
2. When the Display shows **OFF** it's ready for use.

Assemble the unit

The bowl, lid, and motor unit must be correctly aligned and locked into place before operation. Taking a few extra moments to verify assembly can help prevent startup errors and ensure your InstantChill™ is ready to create delicious frozen treats.

USING THE MIXING BOWL

How to attach the Mixing Bowl

You'll use the Mixing Bowl to mix and churn ingredients for all programs except Rolled Ice Cream.

1. Make sure the Cold Plate and the bottom of the Mixing Bowl are both dry and completely clean.
2. Place the Mixing Bowl onto the Cold Plate on the Base, with the handles aligned diagonally, with handle on the right side closer to the Control Panel.

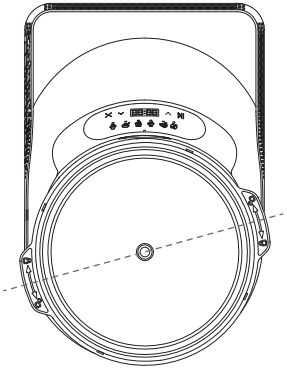

3. Using the Mixing Bowl handles, press down and rotate clockwise. It is normal to feel a small "bump" or resistance before the bowl drops into its final locked position. Continue rotating until the bowl clicks into place.

   If the Mixing Bowl is attached properly to the base, it should not move. If the Mixing Bowl is not attached properly, the Motor will not line up and the system will not cool sufficiently and may show a "Lid Error" on Display.

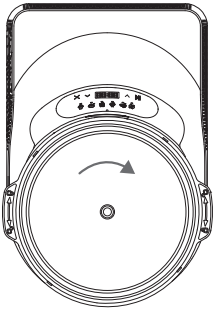

How to remove the Mixing Bowl

1. Using the Mixing Bowl handles, rotate the Bowl counterclockwise until it stops.

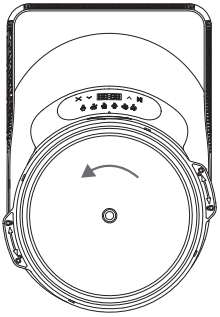

2. Lift the Mixing Bowl up and off the Base.

USING THE LID

You'll use the Lid with the Motor and Churning Paddles for the Ice Cream, Gelato, Sorbet, Non-Dairy and Mix programs.

How to assemble the Lid

1. Place the Lid on a steady surface and insert the motor front into the lid center, then snap the back of the motor into place.

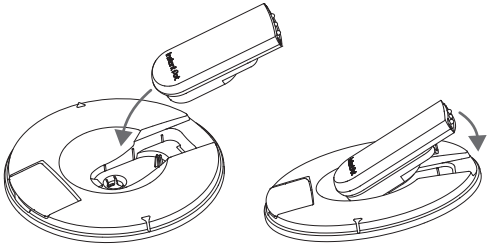

2. Turn the Lid over, hold it with one hand, and align the shaft of the Churning Paddle with the insert on the Lid. Press it in until it snaps into place.

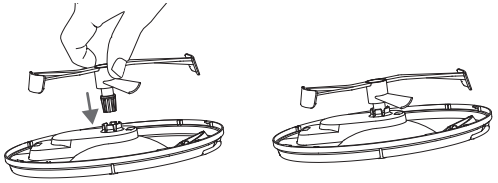

How to disassemble the Lid

1. Remove the Lid from the Mixing Bowl, then wipe the Churning Paddle clean.
2. Hold the Lid by the Motor in the center, and pull the Churning Paddle away from the Lid.

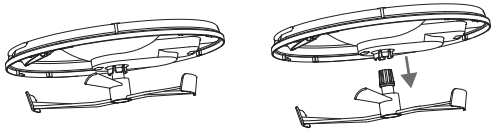

3. Remove the Motor by placing the Lid upside down on a steady surface, then pushing the release tab to separate the Lid from the Motor.

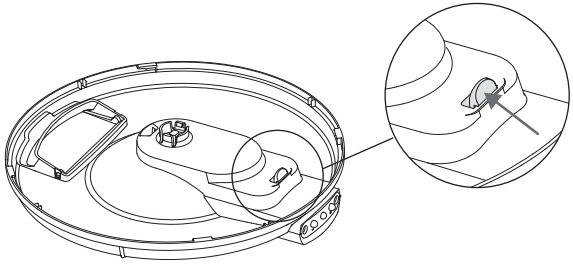

How to attach the Lid

Note: If the Mixing Bowl is not fully rotated/locked, the lid may not attach correctly. A "Lid Error" may appear, and cooling may be reduced. The handles of the Mixing Bowl should be aligned horizontally and the Mixing Bowl should not move. Misalignment of the bowl is the most common cause of "Lid Error".

1. Place the assembled Lid on top of the Mixing Bowl (already on the Base), with the rear of the Motor to the left of the center of the Control Panel and the indicator triangle in the "Unlock" position

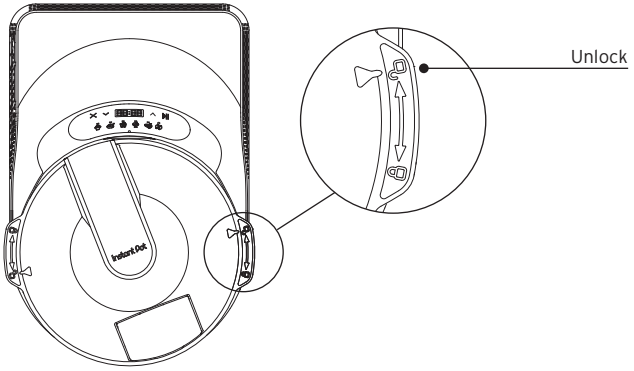

2. Rotate the Lid clockwise until the indicator triangle is in the "Lock" position, and the Motor is centered on the Control Panel and clicks into place.
   NOTE: *If lid will not lock, remove lid, confirm bowl fully locked in place on the base, reattach lid, rotate to "Lock" position. In the correct locked position, the motor should completely cover the black connectors on the base of the unit.*

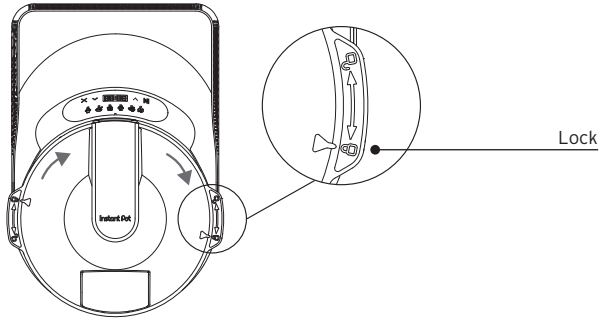

How to remove the Lid

1. If you're running a Smart Program, make sure the program is finished so the Churning Paddle is not rotating.
2. Rotate the Lid counterclockwise until the indicator triangle is in the "Unlock" position, and the Motor points to the left of the Display.

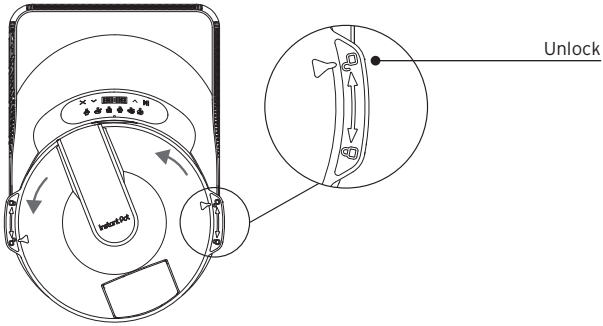

3. Carefully lift the Lid up and off the Mixing Bowl.

SMART PROGRAMS

Choose the Smart Program designed to create the frozen dessert you want to make. The program uses the default time setting for mixing, churning and aerating, or the time setting you chose the last time you used the program.

Programs that use the Mixing Bowl

This chart shows the times to make 1 pint of ice cream. For smaller or larger recipes, adjust times as needed.

Program	Default Time	Min Time	Max Time	Keep Cool Time
Ice Cream	20 min, including: • 2 min mix • 18 min churn	10 min	1 hr	20 min
Gelato	22 min, including: • 2 min mix • 20 min churn	10 min	1 hr	20 min
Sorbet	24 min, including: • 2 min mix • 22 min churn	10 min	1 hr	20 min
Non-Dairy See the Non-dairy Success Guide (In Recipe Section) for tips on achieving the best results with milk alternatives.	24 min, including: • 2 min mix • 22 min churn	10 min	1 hr	20 min

When you change program time, the programs adjusts time in the churn stage.

Maximum fill

The Mixing Bowl holds a maximum of 4 cups of mixture, including liquids and any other ingredients. This allows for expansion during churning and freezing.

Ice cream consistency

When these programs are finished, the frozen dessert (ice cream, gelato, sorbet or non-dairy) will be soft.

- You can enjoy immediately.
- If you prefer a firmer result, transfer the finished ice cream to a freeze-safe container and place in the freezer for 2 or more hours.

How to make frozen desserts

Use these instructions for the Ice Cream, Gelato, Sorbet, and Non-Dairy programs.

Prepare ingredients

Type of recipe	How to prepare
Basic recipe 4 cups (2 pints) or less	Add all ingredients directly to Mixing Bowl before starting the program.
Basic recipe larger than 4 cups (2 pints)	Mix ingredients separately in a kitchen bowl, then batch churn in 2 pint portions or smaller.
Heated recipe	Mix ingredients in kitchen pan, then cook on stove. When ready, strain and cool overnight. Add cool mixture to Mixing Bowl in 2 pint portions or smaller.

Mixing ingredients stage

1. Place the Mixing Bowl onto the Cold Plate on the Base and lock it into place. See page 9 for detailed instructions.
2. Add the ingredients to the Mixing Bowl. Spread out the ingredients, and move them away from the middle, to allow the Churning Paddle to turn easily.
3. Place the Lid on top of the Mixing Bowl and make sure it is locked into place. See page 12 for detailed instructions.

   If the Lid will not lock into place, check that the Churning Paddle is attached securely. If that doesn't solve the issue, re-spread the ingredients to give the Churning Padding room to fit.
4. Select a Smart Program by pushing its button. The indicator light for the selected program is lit and the default or last-used time setting flashes.

   For the Mix program, the indicator will blink fast or slow to indicate the churning speed.

5. If you want to change the time, press the **Up** ∧ or **Down** ∨ arrows to select a new time.
6. Press **Start/Pause** ⏯. The mixing stage starts, and the display shows the set time counting down.

- During the Mix stage, the Churning Paddles rotate to combine the ingredients before churning starts. If the recipe mixture is made from cool ingredients, you can add them directly into the Mixing Bowl for mixing. If you're starting with hot ingredients, you should mix them in a separate bowl or cooking pan and chill them before pouring the mixture into the Mixing Bowl; this allows better performance during chilling and avoids potential damage to the cooling system.

Churning stage

During the Churn stage, the Churn Paddle stirs and beats the frozen dessert mixture — continuously stirring while it freezes, incorporating air into the mixture.

While churning, the paddles may speed up or slow down; this helps to mix the ingredients evenly.

- When the mix time is finished, the churn stage starts.
- When there are 3 minutes remaining, the display will flash "Add In". This allows you to add mix-ins or evaluate the frozen mixture and increase or decrease the Churn time for the program.

  *You can press **Cancel** ✕ to cancel the program at any time.*

  You can press the **Up** ∧ *or* **Down** ∨ *arrows to change the time, then press **Start/Pause** ⏯ to continue.*

Keep Cool stage

The automatic Keep Cool stage keeps cooling the frozen dessert after churning and aeration is finished, so it's ready to serve or store.

1. When the timer reaches 00:00, churning or aeration stops and the display shows **End**.
2. Automatic Keep Cool begins, and the Display shows **Cool** and the timer starts counting down.
3. To add or subtract cooling time, press the **Up** ∧ or **Down** ∨ arrows to select a new time, then press **Start/Pause** ⏯ to continue.
   You can change the time at any time by pressing the Up and Down arrows.
4. To churn the mixture while cooling, press Mix once to select Low speed or press again to select High speed. The Mix indicator flashes slowly for Low Speed or quickly for High speed.
   You can change the mix speed at any time by pressing Mix.
5. When the Keep Cool stage is finished, cooling stops and the display shows **OFF**.
6. Remove the Mixing Bowl. Scoop the frozen dessert out of the Mixing Bowl and either serve it promptly, or transfer it to a freezer-safe container to avoid melting.
   You can press Cancel ✕ at any time to stop Keep Cool.

How to add mix–ins

You can add mix-ins using the Mix program or during the Churn or Keep Cool stages for most programs.

- In general, you'll want to add mix-ins while the program is churning to help pull the mix-ins into the mixture. You can do this during the Churn stage or the Keep Cool stage.
- If you want to add mix-ins during the Keep Cool stage, you can use the Mix program to help distribute the mix-ins into the mixture. See Keep Cool above.
- You can pause churning for 10 seconds by pushing **Start/Pause** ⏯; while you add the mix-ins. The churning will automatically re-start after 10 seconds.

Making sure the mixture is ready

Near the end of a program, you will want to check on the frozen mixture to see if it's done. Please note that the consistency of the final dessert should be soft at the end of the cycle. To get a firmer texture, place the mixture in a sealed container and place in the freezer for 1-2 hours.

- We'll remind you when there's 3 mins left, so you can check the results. At that point, you can add time if you want a thicker consistency, stop the program if you like the consistency, or add mix-ins to the mixture.
- You can press **Start/Pause** ⏯ at any time to temporarily stop the churning paddle. This helps you see the mixture and determine if it's still too liquid and needs more time. Or if the mixture holds its shape on the churning paddles, it's likely done or very close.

Frozen dessert expansion

For the Smart Programs that include churning and aeration, the volume of the ice cream increases as the liquid freezes and air is incorporated. The amount of increase depends on the ingredients, but the chart below shows the estimated amount of expansion. We've included the recommended maximum volume of ingredients you can add to the Mixing Bowl.

Program	Expansion	Ingredients Max	Ingredients Min
Ice Cream	15% to 25%	4 cups (2 pints)	1 cup (8 oz)
Gelato	15% to 25%	4 cups (2 pints)	1 cup (8 oz)
Sorbet	15% to 25%	4 cups (2 pints)	1 cup (8 oz)
Non-Dairy	15% to 25%	4 cups (2 pints)	1 cup (8 oz)

Tips and tricks

- If you're adding mix-ins (candy, nuts, syrups), you can add them:
  - During the final 3 minutes of any program
  - During the Mix program
  - Manually stir them in during the Keep Cool stage of any program

- If your ice cream comes out "icy", check the recipe. Some ingredients with a higher water content can result in an icy texture. If you freeze the ice cream in the freezer and it comes out too hard, let it soften for 5 to 10 minutes before serving. Homemade ice cream is generally harder than commercial ice cream because it contains less air.
- If you plan to freeze the ice cream in the freezer, always transfer it to a freezer-safe container. Do not put the Mixing Bowl in the freezer, or the ice cream will be difficult to scoop out.

Rolled Ice Cream Program

Smart Program	Default Time	Min Time	Max Time
Rolled Ice Cream	30 min	10 min	1 hr

Maximum fill

The Cold Plate holds a maximum of 2/3 cup of mixture, including liquids and any other ingredients. This allows for expansion during freezing.

How to make rolled ice cream

Use these instructions for the Rolled Ice Cream program. You will not use the Lid or Mixing Bowl for Rolled Ice Cream.

1. Prepare the ice cream mixture by combining the ingredients in a kitchen bowl. See page 28 for our suggested rolled ice cream recipe.
2. Ensure the Cold Plate is clean and the Mixing Bowl is removed, since you'll be adding ice cream mixture directly to the Cold Plate.
3. Select **Rolled Ice Cream** by pushing its button. The indicator light for the program is lit, and the default or last-used time setting flashes.
4. If you want to change the time, press the **Up** ∧ or **Down** ∨ arrows to select a new time.
5. Press **Start/Pause** ⏯. The Display shows the set time counting down. It is recommended to allow the machine to get cold for 5–10 minutes prior to adding liquid ingredients.

6. Pour 1/4 to 1/3 cup of mixture in a thin layer onto the Cold Plate. If you are adding mix-ins, chop them into the ice cream mixture, distributing them evenly.

   The more mixture you add, the thicker the rolls of ice cream.

7. Use the Rolled Ice Cream Paddles to continually scrape the Cold Plate as the mixture freezes, working the mixture together until it has a consistent and sticky texture.
8. When the mixture looks like soft ice cream with no visible liquid ingredients, use the Rolled Ice Cream Paddles to evenly spread it across the cooling plate.
9. Once the mixture changes from glossy to a matte texture, use the Rolled Ice Cream Paddles to cut lines and divide the mixture.
10. Place one Paddle at the end of the scored area and use the other Paddle to push the ice cream away from you along the scored line, allowing the ice cream to roll into itself, creating loose rolls.
11. Use the Paddles to transfer each roll into a cup for serving. Add toppings if you want.
12. After finishing one batch, you can add fresh mixture and start over; or end the program by Pressing **Cancel** ✕.

    You can press Cancel ✕ to cancel the program at any time.

    You can press the Up ∧ or Down ∨ arrows to change the time, then press Start/Pause ⏯ to continue.

Mix Program

Mix uses the Churning Paddles to stir the frozen dessert mixture in the Mixing Bowl. During Mix, the Cold Plate cools the frozen dessert as it churns. You can add mix-ins to your recipe, re-mix a finished recipe, or pre-mix ingredients before starting a full program.

Smart Program	Default Time	Min Time	Max Time	Default Speed	Speed Options
Mix	10 min	1 min	40 min	Low	Low High

How to mix

1. Select **Mix** by pushing its button. The indicator flashes slowly to indicate Low speed, and the default or last-used time settings display.
2. If you want to increase the speed, press Mix again. The indicator flashes quickly to indicate High speed.

   You can change the mix speed at any time by pressing Mix.
3. If you want to change the time, press the **Up** ∧ or **Down** ∨ arrows to select a new time.

   You can change the time at any time by pressing the Up and Down arrows.
4. Press **Start/Pause** ⏯. The Display shows the set time counting down.

CHANGING SETTINGS

Turn the sound On/Off

You may set the alert sounds to either ON or OFF.

1. When the Display shows **OFF**, press and hold the **Down** Arrow ∨ and **Up** Arrow ∧ at the same time for 5 seconds.
2. The Display shows **S On** or **SOFF**. The new sound setting is active.

Audible safety alerts cannot be turned off.

Cancel program

While a Smart Program is running, press **Cancel** ✕. The Display shows **OFF**.

Memorized settings

When you set up a program, you can change the time setting from the default. When you change the time, the unit memorizes it and it becomes the default the next time you use that program. If you want, you can erase the memorized setting and reset it to the original factory setting.

Reset individual Smart Programs

- When the Display shows **OFF**, press and hold one Smart Program button for over 3 seconds until the program's indicator light flashes twice.

  The individual Smart Program settings are restored to the factory defaults.

- When you're setting up a Smart Program, press and hold the Smart Program button for over 3 seconds until the time setting returns to the factory defaults and displays in the Display.

Reset all Smart Programs

- When the Display shows **OFF**, press and hold **Cancel** ✕ for over 3 seconds until all Smart Program indicators flash 3 times.

  All Smart Program settings are restored to the factory defaults.

Change the Display language

You can select the language shown on the Display. Choose from: English or French.

1. When the Display shows **OFF** (language set to English) or **-- --** (language set to French), press and hold **Start/Pause** ⏯ and **Cancel** ✕ at the same time for over 3 seconds. The Display shows **En Fr**, with the current language blinking.
2. Press either **Start/Pause** ⏯ or **Cancel** ✕ to toggle through **English (En)** and **French (Fr)**. The selected language blinks.
3. Within 10 seconds, press **Start/Pause** ⏯ and **Cancel** ✕ together at the same time to confirm. If you do not confirm in time, the system keeps the former language and exits language selection.

RECIPES

Scan for more recipes for delicious frozen treats!

Easy Vanilla Ice Cream

Servings: 1 Pint | Smart Program: Ice Cream | Time: 20 minutes

Ingredients:

- 1 cup heavy whipping cream
- 1/2 cup whole milk
- 1/3 cup granulated sugar
- 1 tsp vanilla extract
- Pinch of fine sea salt

Instructions:

1. Add the heavy whipping cream, whole milk, sugar, vanilla extract, and salt directly into the InstantChill Mixing Bowl.
2. Use the Ice Cream program, set to 20 minutes.
3. Once the program is complete, scoop the ice cream into bowls or containers and enjoy immediately — or freeze for a firmer texture.

Flavor Variation: Cinnamon Churro

Add to the Easy Ice Cream base:

- 1 tsp ground cinnamon
- 1 tbsp caramel sauce

Topping:

- Caramel sauce
- Crushed cinnamon sugar pita chips

Instructions:

1. Add the cinnamon and caramel sauce with the remaining base ingredients to the InstantChill Mixing Bowl.
2. Use the Ice Cream program, set to 20 minutes.
3. Serve topped with extra caramel sauce and crushed cinnamon sugar pita chips.

Custard-Style Ice Cream

Servings: 1 Pint | Smart Program: Ice Cream | Time: 30 minutes + chilling

Ingredients:

- 1 cup heavy whipping cream
- 3/4 cup whole milk
- 3 large egg yolks
- 1/3 cup granulated sugar
- 1 tsp vanilla extract
- Pinch of fine sea salt

Supplies:

- Saucepan
- Fine mesh strainer
- Whisk
- Mixing bowls

Instructions:

1. In a saucepan over medium heat, combine the milk, cream, sugar, and salt. Warm until small bubbles appear around the edges and the sugar is dissolved (do not boil).
2. In a separate bowl, whisk the egg yolks until smooth.
3. Temper the eggs: Slowly pour about 1/2 cup of the hot milk mixture into the yolks while whisking constantly to prevent curdling.
4. Gradually pour the tempered yolk mixture back into the saucepan with the remaining milk and cream.
5. Cook over medium-low heat, stirring constantly, until the mixture thickens slightly and reaches 175°F (80°C). Do not boil.
6. Remove from heat and whisk in the vanilla extract.
7. Strain the custard into a clean bowl and cover. Chill in the refrigerator until completely cold—about 2 hours.
8. Once chilled, add the mixture to the Mixing Bowl.
9. Use the Ice Cream program, set to 20 minutes.
10. Scoop into bowls or containers and enjoy immediately or freeze for a firmer texture.

Flavor Variation: Chocolate Truffle

Add to the hot custard (Step 6):

- 2 oz dark chocolate, finely chopped
- 2 tsp unsweetened cocoa powder

Instructions:

1. While the custard is still hot, whisk in the dark chocolate and cocoa powder until smooth.
2. Chill completely, then follow the Custard-Style Ice Cream recipe above.

Gelato

Servings: 1 pint | Smart Program: Gelato | Time: 22 minutes

Ingredients:

- 1 1/4 cup whole milk
- 1/4 cup heavy whipping cream
- 1/3 cup granulated sugar
- 1 tbsp cornstarch
- Pinch of fine sea salt

Instructions:

1. Whisk the 1 tbsp cornstarch with 1/2 cup of the whole milk in a small bowl until completely smooth.
2. In a saucepan over medium-low heat, combine the cornstarch slurry, remaining milk, heavy whipping cream, and a pinch of salt. Heat until gently simmering.
3. Cook and whisk constantly for 1-2 minutes until the mixture thickens enough to coat the back of a spoon. Do not overcook.
4. Remove from heat. Press plastic wrap directly onto the surface of the mixture and refrigerate for 2 hours until completely cold.
5. Pour the chilled base into the InstantChill Mixing Bowl. Press **Start** on the Gelato program for 22 minutes.
6. Enjoy immediately for soft gelato or freeze in an airtight container for 1–2 hours for a firmer scoop.

Any Juice–Sorbet

Servings: 1 Pint | Smart Program: Sorbet | Time: 24 minutes

Ingredients:

- 2 cups fruit juice (any variety)
- 1/3 cup granulated sugar
- 3 tbsp hot water
- 1 tsp lemon juice
- Pinch of fine sea salt

Supplies:

- Mixing bowl
- Spoon or whisk

Instructions:

1. In a small bowl, combine the sugar and hot water. Stir until the sugar is fully dissolved to create a simple syrup.
2. In a separate bowl, mix the fruit juice, lemon juice, and salt.
3. Add the simple syrup to the juice mixture and stir to combine.
4. Pour the mixture into the Mixing Bowl.
5. Use the Sorbet program set, to 24 minutes.
6. Scoop into bowls or containers and enjoy immediately or freeze for a firmer texture.

Flavor Variation: Citrus Sorbet

Use the base recipe with:

- 1 cup orange juice
- 1 cup grapefruit juice

Instructions:

1. Prepare the base as directed, using orange and grapefruit juice as your juice variety.
2. Use the Sorbet program set to 24 minutes.
3. Serve immediately or freeze for a firmer texture.

Dairy-Free Coconut Milk Ice Cream

Servings: 1 Pint | Smart Program: Non-Dairy | Time: 24 minutes

Ingredients:

- 1 1/2 cups full-fat canned coconut milk (shake well before using)
- 1/4–1/3 cup granulated sugar
- 1 tsp vanilla extract
- Pinch of fine sea salt

Supplies:

- Mixing bowl
- Whisk

Instructions:

1. In a medium bowl, whisk together the coconut milk, sugar, vanilla extract, and salt until smooth and the sugar has dissolved.
2. Taste the base before churning. Coconut milks vary in sweetness, and the flavor will mellow slightly once chilled — adjust sugar as needed.
3. Pour the mixture into the Mixing Bowl.
4. Use the Non-Dairy program, set to 24 minutes.
5. Scoop into bowls or containers and enjoy immediately or freeze for a firmer texture.

Flavor Variation: Almond Joy

Add to the base:

- 1/2 tsp almond extract

Add at the 3-minute mark:

- 2 tbsp toasted sweetened coconut flakes
- 2 tbsp mini chocolate chips

Instructions:

1. Stir the almond extract into the base before starting the program.
2. Use the Non-Dairy program, set to 24 minutes.
3. At the 3-minute reminder, add the toasted coconut flakes and mini chocolate chips.
4. Serve immediately or freeze for a firmer texture.

Non–Dairy Success Guide

Not all non-dairy ingredients perform the same when frozen. Follow these tips for the creamiest results:

Best Results: Full-fat canned coconut milk delivers the richest texture and most consistent results.

Great Results: Coconut milk + oat milk blends offer a creamy texture with a lighter flavor profile.

Using Almond Milk, Oat Milk, or Other Low-Fat Bases? These ingredients contain less fat, which can lead to a firmer or icier texture.

For best results:

- Try the Sorbet function, which will Mix from time to time during the Churn phase to keep the low-fat mixture moving quickly
- Add a little extra richness, such as:
  - 1-2 tbsp coconut cream
  - 1-2 tbsp full-fat canned coconut milk
  - 1 tbsp nut butter (almond, cashew, or peanut)
  - 1-2 tbsp mashed avocado
- Consider adding a stabilizer for a smoother texture:
  - 1 tsp xanthan gum
  - 1 tsp instant pudding mix
  - 1-2 tsp tapioca starch

Don't skip sweeteners called for in the recipe. Sugar helps create a smoother, less icy frozen dessert.

Sugar Alternatives Success Guide:

Sugar helps:

- Lower the freezing point
- Reduce iciness
- Improve scoopability
- Create a smoother texture

When sugar is reduced or replaced entirely, frozen desserts may become:

- Harder
- Icier
- Less creamy
- More difficult to scoop

Best Performing Sugar Alternatives:

- Allulose (Best Overall)
  Allulose behaves much like sugar in frozen desserts and helps maintain a softer, creamier texture.
- Monk Fruit + Allulose Blends
  Provides sweetness while preserving texture better than many sugar-free alternatives.
- Erythritol Blends
  Can work well when combined with allulose or other sweeteners.

Results May Vary:

- Stevia
  Provides sweetness but contributes little to texture.
  Tip: Use in recipes specifically developed for stevia.
- Monk Fruit (Pure)
  Sweetens effectively but doesn't provide the texture benefits of sugar.

Tips for Better Results:

- Add More Fat
  When reducing sugar, additional fat can improve texture.
- Use the Right Recipe
  Sugar-free recipes should be formulated specifically for frozen desserts rather than simply swapping sugar for a sweetener.
- Expect Texture Differences
  Even with the best substitutes, sugar-free ice cream may not be quite as soft as traditional ice cream.

Rolled Ice Cream

Servings: 1 Pint | Smart Program: Rolled Ice Cream | Time: 20 minutes

Ingredients (Base):

- 1 cup heavy whipping cream
- 2/3 cup whole milk
- 1/3 cup granulated sugar
- 1 tsp vanilla extract
- Pinch of fine sea salt

Supplies:

- 2 Ice Cream Paddles (included)
- Mixing bowl
- Whisk or spatula

Instructions:

1. In a bowl, whisk together the heavy whipping cream, whole milk, sugar, vanilla, and salt until smooth and the sugar is dissolved.
2. Use the Rolled Ice Cream program, letting the Cold Plate chill for at least 5 minutes.
3. Pour 1/4–1/3 cup of the base mixture onto the Cold Plate.
4. Using the two Rolled Ice Cream Paddles, spread and fold continuously until the mixture thickens into a smooth, creamy consistency.
5. Knead quickly with both Paddles, chopping and folding to evenly cool and aerate.
6. Spread the mixture into a thin, even rectangle about 1/8 inch thick.
7. Let sit for 20–30 seconds until matte and firm.
8. Hold one Paddle at a 45° angle and push steadily forward to create rolls.
9. Transfer the rolls into a cup or bowl and serve immediately. Scrape any residue off the plate and repeat with remaining mixture.

Flavor Variation: Easy Jam Rolled Ice Cream

Add to the base:

- 1 tbsp jam or fruit preserves (such as strawberry, raspberry, blueberry, or apricot) for every 1/4 cup of base poured onto the plate

Toppings:

- Fresh diced fruit
- Whipped cream

Instructions:

1. Follow the Rolled Ice Cream base recipe through Step 3.
2. Add 1 tbsp of your favorite jam to the center of the poured base.
3. Spread, fold, and roll as directed, incorporating the jam evenly.
4. Top with whipped cream and fresh fruit. Serve immediately.

CLEANING AND STORING

Properly cleaning and storing your Instant Pot InstantChill Ice Cream Maker will help ensure it works efficiently and effortlessly.

- Clean your Ice Cream Maker after each use.
- Always unplug the until and let all parts come to room temperature before cleaning or storing.
- Before use or storing, make sure all surfaces are dry.
- To avoid damage, don't store anything, other than the Mixing Bowl, on the Base when not in use.
- When storing, be sure the unit is upright to avoid damage to the cooling system.

Part	Cleaning instructions
Mixing Bowl and Lid	• Be sure to remove the Churning Paddle and Motor from the Lid before cleaning, making sure you don't get the Motor wet. • Hand wash with hot water and mild dish soap. • Dry thoroughly before storing or using again.
Churning Paddle	• Wash after each use. • Hand wash with hot water and mild dish soap or wash in dishwasher, top rack. • Dry thoroughly before storing or using again.
Accessories • Rolled Ice Cream Paddles (2)	• Wash after each use. • Hand wash with hot water and mild dish soap or wash in dishwasher, top rack. • Never use harsh chemical detergents, powders or scouring pads on accessories. • Dry thoroughly before storing or using again.

Part	Cleaning instructions
Cold Plate	• After use, while the Cold Plate is still cold and ingredients frozen, use the Rolled Ice Cream Paddles to remove as much mixture as possible. Then allow the Cold Plate to return to room temperature. • Once the Cold Plate reaches room temperature, use a sponge or damp cloth with mild dish soap and water to wipe the plate to pick up any remaining mixture. Repeat as needed. • When clean, dry thoroughly before use. • Avoid placing excessive amounts of liquid on the Cold Plate. • Never use harsh chemical detergents, powders or scouring pads.
Power elements • Power Cord • Motor	• Use a barely-damp cloth to wipe any residue off cord and motor.
Base	• Clean the outside of the Base and the control panel with a soft, barely-damp cloth or sponge.

TROUBLESHOOTING

Problem	Cause	Solution
Ice cream won't freeze	The compressor isn't on or is not chilling.	Turn off machine and allow to rest for 30 minutes. Ensure that the motor is aligned with the center of the Control Panel. Do not run machine continuously for long time periods (over 90 minutes). If this does not solve the issue, call Consumer Care.
	The mixture has too much sugar or alcohol.	Alcohol and sugar can prevent the frozen dessert from freezing. Adjust recipe to reduce alcohol or sugar and try again.
	There isn't enough ventilation around the Base.	Make sure the Base has at least 4 inches of space on all sides when operating.
	The unit was not allowed to rest in the upright position for at least 2 hours prior to use.	Let the appliance sit upright for at least 2 hours before first use. This allows the internal cooling system to settle after transport, ensuring optimal performance.
Churning Paddle won't turn	The Motor is not locked into place or the Lid is not fully locked in place on the Mixing Bowl.	Stop the program and make sure the Motor is fully inserted and locked in place on the Lid. Then make sure the Lid is fully locked in place on the Mixing bowl and try again.
	The Mixing Bowl is too full.	Stop the program and turn the unit off, then remove some of the mixture.
	This can happen when part of the mixture freezes faster than the rest of the recipe. In some cases, the bottom layer may become frozen solid while the top of the mixture is still soft.	Stop the program and remove the bowl. Check the consistency of the mixture. If the bottom of the bowl is frozen solid, this may be preventing the paddle from turning freely. Allow the mixture to soften for 5-10 minutes at room temperature. Stir the mixture thoroughly, paying special attention to any frozen layer at the bottom of the bowl. Reassemble the bowl and lid, ensuring all components are properly locked into place. Restart the program.

Problem	Cause	Solution
Lid will not lock into position	The Churning Paddle on the Lid or the Mixing Bowl aren't in the correct positions.	Read **Using the Lid** on page 11 to ensure that the Lid is correctly assembled and positioned on the Mixing Bowl.
Ice cream won't freeze in the Smart Program time	Mixture or ingredients were too warm when placed in the Mixing Bowl.	Add more time for the current batch. For future batches, pre-chill the ingredients before starting the program.
	The volume of mixture is too big for the freezing time.	Run the program again but increase the time. Be sure to use a longer program time the next time you use this recipe.
Can't remove Mixing Bowl after churning	The Mixing Bowl was wet when the program started and has developed ice on the bottom.	Stop the program and turn the unit off. Let the Base and Mixing Bowl defrost and then dry thoroughly before trying again.
Lid will not open	Mixture is frozen, preventing the Churning Paddle from moving and the Lid from opening.	Stop the program and turn the unit off. Wait until the mixture has melted enough for the Churning Paddle to turn again so you can open the Lid. If this does not solve the issue, call Consumer Care.
Cold Plate not cooling	Compressor time out or malfunction.	Contact Consumer Care.
Display remains blank after connecting the power cord	Bad power connection or no power	Inspect power cord for damage. If damage is noticed, contact Consumer Care. Check outlet to ensure it is powered.
	Electrical fuse has blown	Contact Consumer Care.
Occasional clicking or light cracking sound	Normal operation.	This is normal; no action needed.
Error code appears on display and beeps continuously	Varies.	Read "Error Codes" for instructions.

ERROR CODES

If the control panel shows an error code from this list, there is an issue with the Instant Pot InstantChill Ice Cream Maker. Here are the actions you should take to fix the problem.

Problem	Cause	Solution
Lid Err	The lid is not installed correctly for programs that require it.	Most Lid Error messages occur when one of the components is not fully assembled. 1. Remove and reassemble the mixing bowl. Lift the bowl off the base, then place it back on and rotate it until it is fully seated and locked into position. Even if the bowl appears attached, it may not be engaged correctly if it is not turned completely into place. 2. Check that the motor is fully inserted. Push the motor straight down until it is fully seated. 3. Confirm the lid is securely attached to the mixing bowl. Twist the lid until it locks into place. When properly installed, the motor will sit flush and fully cover the black connector plate on top of the lid. If any portion of the black connector plate remains visible after installing the motor, remove and reinstall the lid, ensuring it is fully locked into position. 4. Once the bowl, motor, and lid are fully assembled and locked into place, try again.

Still having questions or trouble with your InstantChill™?
Our Customer Care team is ready to help.

- Contact us at support@instantpot.com
- Call 800-828-7280 Monday-Friday from 10:00 AM-6:00 PM ET
- Connect with us via live chat 24/7 through www.instantpot.com.

We'll work with you to make it right!

REPLACEMENT PARTS AND ACCESSORIES

We offer genuine replacement parts and accessories for your Instant Pot InstantChill Ice Cream Maker, if you need them.
Visit **www.instantpot.com** for details.

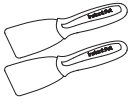	Rolled Ice Cream Paddles (2)
	Storage containers (2 or 4 packs)
	User Manual

In accordance with Québec Regulation O.C. 800-2025, we inform you that we do not sell or provide replacement products to repair this appliance. Certain replacement parts may be available for general maintenance only.

LEARN MORE

There's a whole world of information about your Instant Pot product just waiting for you. Here are some of the most helpful resources.

Register your product

Instantpot.com/register

Contact Consumer Care

Instantpot.com/customer-care-center
support@instantpot.com

Recipes and educational content

Discover more resources at instantpot.com

Replacement parts and accessories

Instantpot.com

Join the community



Product specifications

Model	Volume	Wattage	Power
ICFT26BB-XX	2 Pints .95 Litres	150 W	120V ~ 60Hz

WARRANTY

One (1) Year Limited Warranty

This One (1) Year Limited Warranty applies to purchases made one year from the purchase date or delivery date, whichever is later, from authorized retailers of Instant Pot Brands by the original appliance owner and is not transferable. Proof of original purchase date and, if requested by Instant Pot Brands, return of your appliance, is required to obtain service under this Limited Warranty. Provided the appliance was used in accordance with the use & care instructions, Instant Pot Brands will, in its sole and exclusive discretion, either: (i) repair defects in materials or workmanship; or (ii) replace the appliance. In the event that your appliance is replaced, the Limited Warranty on the replacement appliance will expire twelve (12) months from the date of receipt. Failure to register your product will not reduce your warranty rights. The liability of Instant Pot Brands, if any, for any allegedly defective appliance or part will not exceed the purchase price of a comparable replacement appliance.

What is not covered by this warranty?

- Products purchased, used, or operated outside of the United States and Canada.
- Products that have been modified or attempted to be modified.
- Damage resulting from accident, alteration, misuse, abuse, neglect, unreasonable use, use contrary to the operating instructions, normal wear and tear, commercial use, improper assembly, disassembly, failure to provide reasonable and necessary maintenance, fire, flood, acts of God, or repair by anyone unless directed by an Instant Pot Brands representative.
- Use of unauthorized parts and accessories.
- Incidental and consequential damages.
- The cost of repair or replacement under these excluded circumstances.

EXCEPT AS EXPRESSLY PROVIDED HEREIN AND TO THE EXTENT PERMITTED BY APPLICABLE LAW, INSTANT POT BRANDS MAKES NO WARRANTIES, CONDITIONS OR REPRESENTATIONS, EXPRESS OR IMPLIED, BY STATUTE, USAGE, CUSTOM OF TRADE OR OTHERWISE WITH RESPECT TO THE APPLIANCES OR PARTS COVERED BY THIS WARRANTY, INCLUDING BUT NOT LIMITED TO, WARRANTIES, CONDITIONS, OR REPRESENTATIONS OF WORKMANSHIP, MERCHANTABILITY, MERCHANTABLE QUALITY, FITNESS FOR A PARTICULAR PURPOSE OR DURABILITY.

Some states or provinces do not allow for: (1) the exclusion of implied warranties of merchantability or fitness; (2) limitations on how long an implied warranty lasts; and/or (3) the exclusion or limitation of incidental or consequential damages; so these limitations may not apply to you. In these states and provinces, you have only the implied warranties that are expressly required to be provided in accordance with applicable law. The limitations of warranties, liability, and remedies apply to the maximum extent permitted by law. This limited warranty gives you specific legal rights, and you may also have other rights which vary from state to state or province to province.

Product Registration

Please visit **www.instantpot.com/register** to register your new Instant Pot Brands appliance. Failure to register your product will not diminish your warranty rights. You will be asked to provide the store name, date of purchase, model number (found on the back of your appliance) and serial number (found on the bottom of your appliance) along with your name and email address. The registration will enable us to keep you up to date with product developments and recipes, and contact you in the unlikely event of a product safety notification. By registering, you acknowledge that you have read and understand the instructions for use, and warnings set forth in the accompanying instructions.

Warranty Service

To obtain warranty service, please contact our Consumer Care Department by email to **support@instantpot.com**. You can also create a support ticket online at **www.instantpot.com**. If we are unable to resolve the problem, you may be asked to send your appliance to the Service Department for quality inspection. Instant Pot Brands is not responsible for shipping costs related to warranty service. When returning your appliance, please include your name, mailing address, email address, phone number, and proof of the original purchase date as well as a description of the problem you are encountering with the appliance.

NOTES

⚠WARNING

DO NOT place this appliance on or close to a gas or electric burner, or inside an oven. NEVER use on your stove. Always operate this appliance on a stable, non-combustible, level surface, such as a kitchen countertop.



In Canada, distributed by
Instant Pot Brands
199 Bay Street, Suite 4000
Toronto, ON M5L 1A9 Canada

In U.S., distributed by
Instant Pot Brands
8725 W Higgins Road, Suite 725
Chicago, IL 60631 U.S.

instantpot.com

© 2026 Instant Pot Brands

399-0084-03US

Art release date
09/11/2026

INSTANT POT is a
registered trademark
of Instant Pot Brands