insinkerator®



POWER SERIES

Performance Plus C5000

Dimensions

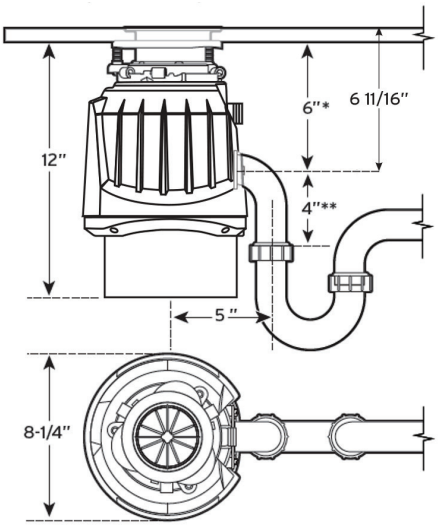

Job Specifications

Submittal Sheet

This model offers the following features and benefits:

- **3/4 HP heavy duty Dura-Drive® induction motor**
- **Quiet SoundSeal Technology®** is 75% quieter than the Badger® 5 disposal
- **Advanced Grind** for tough and fibrous food scraps like bones and corn cobs
- **3-Stage MultiGrind® Technology:** Finest grind designed to help prevent clogs[1]
- **EZ Connect Disposal** easily connects to a hardwire connection or outlet
- **Removable, dishwasher safe Quiet Collar® sink baffle** traps noise inside the disposal
- Safe for use with properly maintained septic tanks
- **EZ Connect Cord, EZ Connect Hardwire Adapter, and Putty-Free Sink Seal** (no plumber's putty required) included

Sample Specification

Food Waste Disposer(s) shall be InSinkErator Performance Plus C5000, continuous feed, with 3/4 HP motor, stainless steel grinding elements with two stainless steel 360° swivel lugs. Self-service wrench.

Warranty

8-Year *We Come to You*® In-Home Limited Warranty[2]

[1] Compared to InSinkErator® 1-stage grind and 2-stage MultiGrind® Technology.
[2] Visit www.insinkerator.com for warranty details.

1-800-558-5700
www.insinkerator.com

Specifications

Type of Feed	Continuous
On/Off Control	Wall Switch
Motor	Single Phase
HP	3/4
Volts	120
HZ	60
Amp. (Avg. Load)	9.5
Time Rating	Intermittent
Lubrication	Permanently Lubricated Upper & Lower Bearings
Shipping Weight (Approx.)	18 lb. 5 oz.
Overall Height	12"
Motor Protection	Automatic Reset
Drain Connection	1-1/2" Cushioned Slip Joint
Dishwasher Drain Connection	Yes

Food waste is roughly 60-95% water. By using your disposal regularly, you can help divert food waste from landfills and reduce greenhouse gas emissions. Many wastewater treatment plants are capable of converting food waste processed by your garbage disposal into renewable energy and beneficial fertilizer. Make sustainability a family affair by using your disposal. After all, the smallest changes can make the biggest impact.

The ONLY manufacturer with disposers INVENTED, DESIGNED & ASSEMBLED in the USA

UL LISTED · UPC IAPMO Listed · ASSE 1008 · Sanitary Engineering

H1001-25E-83-10

®/TM © 2025 InSinkErator. All rights reserved.