ICECO



VL45 PLUS

V1.0

Catalogue

1 Product Placement Notice 01

2 Multi-Access Lid & Side Drawer System 02

3 Supply Details 04

4 Operation 06

- 4.1 ON/OFF Button 07
- 4.2 MAX & ECO Mode 07
- 4.3 Triple Battery Protection Operation 08
- 4.4 Switch Between °C to °F 09

5 App Control 10

6 Error Code And Solutions 11

7 Cleaning And Maintenance 17

- 7.1 Cleaning 17
- 7.2 Danger Behavior 17

8 Troubleshooting (Q & A) 18

- 8.1 Heat Resistance & Water Resistance 18

Catalogue

- 8.2 What should I do if the refrigerator is upside down when it is delivered? 18
- 8.3 Why did it change back to the original temperature after setting the temperature? ... 19
- 8.4 Why is there a temperature difference (between the actual temperature of the refrigerator and the set temperature)? 19
- 8.5 What kind of cable do I need to use in the car and at AC socket? 19
- 8.6 What is the function of triple battery protection? How do they work? 20
- 8.7 What is the 24 hours power consumption? 21
- 8.8 What is the specification of the fuse of the refrigerator? 21

9 Customer Service **22**

10 Safety Instructions **24**

11 Accessories (Purchase Separately) **30**

- 11.1 Power Support Series 30
- 11.2 ICECO Portable Fridge Catalog 31

1 Product Placement Notice

When the product is placed in an elevated position (e.g., vehicle trunk), leave at least 6.0 inches (150 mm) of clearance in front of the side door.

Ensure the door is properly supported by the ground, a platform, or another stable surface when opened.

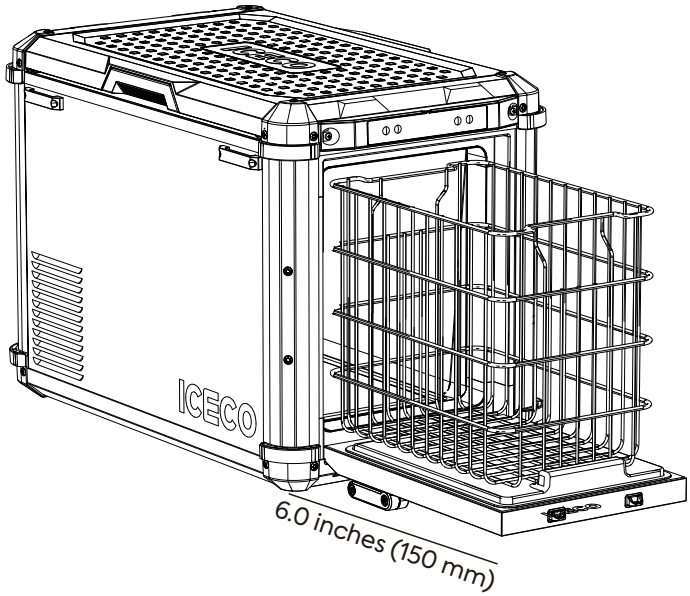

2 Multi-Access Lid & Side Drawer System

This cooler features a three-way access design, including dual-direction top opening and a side-access drawer, providing maximum convenience and flexibility.

Top Lid Opening

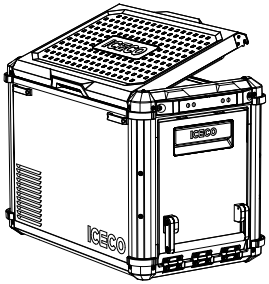

Right-Side Opening

Push the right latch inward.
Lift the lid from the right side.

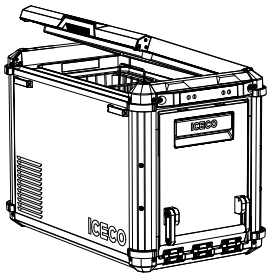

Left-Side Opening

Push the left latch inward.
Lift the lid from the left side.

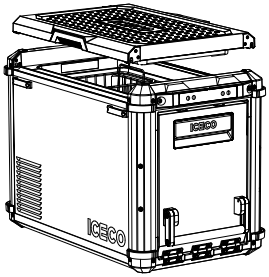

Full Lid Removal

Press both latches inward at the same time.
Lift the lid upward to remove it completely.

Side Drawer Access

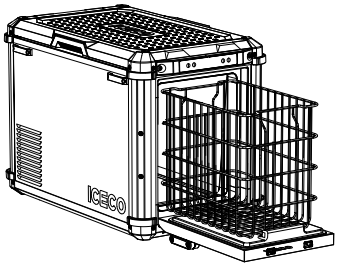

Pull-Out Basket

1. Open the side door.
2. Pull the basket outward using the handle.
3. Access or store items as needed.

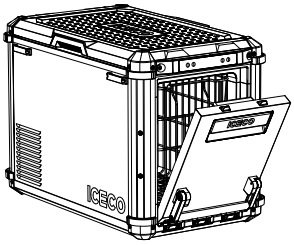

Close & Reset

1. Slide the basket back into place.
2. Close the side door securely.

Usage Notes

Choose top or side access based on your space and usage needs.
Side access is ideal for frequently used items like drinks.
This helps reduce cold air loss compared to opening the top lid.
Always ensure latches and doors are securely closed before use.

3 Supply Details

VL45 PLUS



VL45 PLUS
Refrigerator ×1



Basket x2



DC Cigarette Lighter
Plug Cable x1



AC Adapter x1



Tie-Down Straps x4

Model	VL45 PLUS
Color	Black/Other limited colors
Dimensions (L x W x H)	28.3 x 16.7 x 19.5 inches (717 x 423 x 493 mm)
Net Weight	57.6 lbs (26.1 kg)
Capacity	44.4 quarts (42.0 liters)
Voltage	DC 12/24V
App Control	√
Temperature Range	0°F to 50°F (-18°C to +10°C)

4 Operation



A **Power** (Press to turn on/off)

B **Setting** (Hold to enter setting)

C **Temp. Setting** (Up)

D **Temp. Setting** (Down)

4.1 ON/OFF Button

After connecting the power supply, the refrigerator automatically enters standby mode.

In standby mode:
Press the " ⏻ " button to switch to the working state.
In working mode:
Press the " ⏻ " button to switch back to standby mode.

4.2 MAX & ECO Mode

In the standby mode state (press the " ⏻ " button to turn on the refrigerator), then press and hold the " ⚙ " button to enter the setting menu.

After entering the menu, press the " ⚙ " button briefly to cycle through the functions of refrigerator operation mode setting - battery protection level setting - Celsius Fahrenheit switching, and so on.

There are two modes of operation: Max or Eco mode. Switch between MAX and ECO modes by briefly pressing the " + " or " − " button. Wait for 5 seconds after adjustment to save the settings automatically.

4.3 Triple Battery Protection Operation

In the power-on state (press the " ⏻ " button to turn on the refrigerator), then press and hold the " ⚙ " button to enter the setting menu.

After entering the menu, press the " ⚙ " button briefly to cycle through the functions of refrigerator operation mode setting - battery protection level setting - Celsius Fahrenheit switching, and so on.

The top right of the screen will be labeled **H\M\L** to refer to the three battery protection modes of High\Medium\Low respectively. Switch between high, low and medium battery protection modes by briefly pressing the " **+** " or " **−** " button. Wait for 5 seconds after adjustment to save the settings automatically.

VOLTAGE	PROTECTION POSITION	LOW	MED	HIGH
		1Bar ▬	2Bar ≡	3Bar ≡
12V	CUT OFF (V)	9.6	10.4	11.1
	CUT IN (V)	10.9	11.7	12.4
24V	CUT OFF (V)	21.3	22.8	24.3
	CUT IN (V)	22.7	24.2	25.7

4.4 Switch Between ˚C and ˚F

In the power-on state (press the " ⏻ " button to turn on the refrigerator), then press and hold the " ⚙ " buttons to enter the setting menu.

After entering the menu, press the " ⚙ " button briefly to cycle through the functions of refrigerator operation mode setting - battery protection level setting - Celsius Fahrenheit switching, and so on.

When cycling to the Celsius Fahrenheit switching function the screen will show the " **℃** " or " **℉** " icon. Switch the temperature unit by short pressing the " **+** " or " **—** " button. Wait for 5 seconds after adjustment to save the settings automatically.

5 App Control

Android	IOS

1 APP Download and Installation:

Android users can find the "ICECO" app on the Google Play, and iPhone users can locate it on the App Store by searching for "ICECO" or Download the app by scanning the QR code above using your mobile phone's QR code scanner.

2 Instruction:

Log into the APP, with Bluetooth on, and click "Add Devices". The APP will search for available fridge, and the app will display instructions.

6 Error Code And Solutions

Code	Description
E1	The DC Voltage is below the protection settings and the battery protection mode is activated.
E2	The cooling fan is over-loaded with more than 1A of current.
E3	Repeated switching of the machine or a faulty input voltage causes this motor start error. The pressure difference in the refrigeration system is too high.
E4	Minimum motor speed error, the compressor is over-loaded, and the motor cannot maintain its minimum speed of 1850 rpms.
E5	Compressor control module temperature too high or too low protection. (ambient temperature is too high or too low, or the system load is too high, causing the internal temperature of the module/ECU > 212°F or < 14°F)
E6/LL	The temperature sensing head is loose or damaged.
E7/HH	NTC failure (short circuit)

E1

Error Code

The DC Voltage is below the protection settings and the battery protection mode is activated.

Solutions

1. When using in the car, turn the car ignition on and start the refrigerator again;

2. When of using the AC cable to plug it into an AC socket, you can adjust the battery protection to medium or low mode. If it still does not start after adjusting the mode, then the adapter is faulty and needs to be replaced with a new one.

E2

Error Code

The cooling fan is over-loaded with more than 1A of current.

Solutions

If the fan does not start but the compressor does, this is a short-circuited fan. You can fix the error code by replacing the fan.

E3

Error Code

Repeated switching of the machine or a faulty input voltage causes this motor start error. The pressure difference in the refrigeration system is too high.

Solutions

1. Make sure to turn off the machine and wait for 5 minutes before turning it on again. If the compressor starts and then stops a few seconds later, it is an E1 fault, and you need to refer to the above E1 troubleshooting method for troubleshooting;

2. The input voltage is too low to reach the minimum starting voltage required by the battery protection, resulting in the refrigerator can not start. Lowering the battery protection setting may solve the problem.

E4

Error Code

Minimum motor speed error, the compressor is over-loaded, and the motor cannot maintain its minimum speed of 1850 rpms.

Solutions

1. Make sure to turn off the machine and wait for 5 minutes before turning it on again. If the compressor starts and then stops a few seconds later, it is an E1 fault, and you need to refer to the above E1 troubleshooting method for troubleshooting;

2. Protection may be triggered at ambient temperatures above 55°C. Try to avoid using the refrigerator at high ambient temperatures. Make sure there is enough space outside the compressor cover to dissipate heat
(more than 5cm on the left and right sides and 10cm space on the front air outlet).
Check that the cooling fan terminals are connected tightly. A non-functioning cooling fan will result in the compressor being unable to dissipate heat and the temperature will rise.

E5

Error Code

Compressor control module temperature too high or too low protection.
(ambient temperature is too high or too low, or the system load is too high, causing the internal temperature of the module/ECU > 212°F or< 14°F)

Solutions

1. The compressor will break down at ambient temperatures above 55°C. Try to avoid using the refrigerator at high ambient temperatures. Make sure there is enough space outside the compressor cover to dissipate heat
(more than 5cm on the left and right sides and 10cm space on the front air outlet).
Check that the cooling fan terminals are connected tightly. A non-functioning cooling fan will result in the compressor being unable to dissipate heat and the temperature will rise.

2. For ECU (module) issues, you can adjust the battery protection mode and then make sure the starting voltage is normal. If that doesn't fix the problem, the ECU will need to be replaced.

E6/LL

Error Code

The temperature sensing head is loose or damaged.

Solutions

1. Check the temperature sensing head to see if the connection is tight. If it is loose, reconnect it and install it in place.

2. If the sensor head is damaged, replacing the sensor head can solve the problem.

E7/HH

Error Code

NTC failure (short circuit)

Solutions

1.Check the temperature sensing head terminals for water ingress. Try replacing the temperature sensing head to see if the refrigerator works properly.

2.Check the terminals on the control panel end for shorts.

7 Cleaning And Maintenance

7.1 Cleaning

- Always unplug the fridge before cleaning the fridge.
- You can clean the interior and exterior of the fridge by using warm water, mixed with a gentle non-abrasive detergent.
- You may use a soft sponge, or micro fiber cloth.
- When not in use, it's better to leave the lids open to reduce odors.
- If odors occur, please clean the fridge thoroughly, or use baking soda in a bowl to absorb odors.

7.2 Danger Behavior

⚠ Use pointed objects to scrape, or defrost ice.

⚠ Use abrasive detergents to clean.

⚠ Use heavy duty sponges (due to scratching).

⚠ Clean the fridge with running water or pressure washer.

⚠ Do not clean the fridge unless the power input covers are securely closed.

8 Troubleshooting (Q & A)

8.1 Heat Resistance & Water Resistance

Heat Resistance

ICECO refrigerators are engineered to operate at an ambient temperature of up to 55°C (131°F).

Water Resistance

ICECO refrigerators can operate under light rain conditions. Please keep the vents above clear of water, and please add some clearances to the bottom of the fridge if the ground is wet.

We DO NOT recommend exposing the fridge to moderate or heavy rain.

As with all electrical appliances, over-exposure to moisture may shorten the fridge's life.

8.2 What should I do if the refrigerator is upside down when it is delivered?

Please leave your refrigerator upright for **24 hours** to allow the compressor lubricant to resettle before powering on the fridge. Otherwise it may contribute to certain operation abnormalities.

8.3 Why did it change back to the original temperature after setting the temperature?

The Solid/Non-Flashing number on the display is the CURRENT interior temperature. The Flashing number is your SET temperature after adjustment.

The compressor will shut off when the SET temperature is reached.

8.4 Why is there a temperature difference (between the actual temperature of the refrigerator and the set temperature)?

Because of the sinking nature of cold air, the different temperatures may exist in different locations in the refrigerator (the temperature of the bottom will be the lowest). The panel only shows the average temperature of the refrigerator.

8.5 What kind of cable do I need to use in the car and at AC socket?

The DC cable is provided. You can power it from your vehicle's cigarette lighter plug using the DC cable. You can also power it from an AC outlet using an AC cable/AC adapter.

8.6 What is the function of triple battery protection? How do they work?

The triple battery protection is designed to prevent over-discharge and battery depletion.

When the measured DC voltage is below the set value, the compressor is shut off to prevent battery depletion.

VOLTAGE	PROTECTION POSITION	LOW	MED	HIGH
		1Bar ⎓	2Bar ⎓	3Bar ⎓
12V	CUT OFF (V)	9.6	10.4	11.1
	CUT IN (V)	10.9	11.7	12.4
24V	CUT OFF (V)	21.3	22.8	24.3
	CUT IN (V)	22.7	24.2	25.7

For example, When LOW mode is selected and the battery voltage drops below 9.6 V, the refrigerator will automatically shut off.

The refrigerator will restart once the battery voltage rises back to 10.9 V.

8.7 What is the 24 hours power consumption?

Model	Electrical Power	Model	Electrical Power
APL20	0.293 KW.H	**GO20**	0.433 KW.H
APL35	0.381 KW.H	**JP30 ProS**	0.323 KW.H
APL55	0.326 KW.H	**JP40 ProS**	0.323 KW.H
VL45	0.348 KW.H	**JP50 ProS**	0.405 KW.H
VL60	0.416 KW.H	**VL35 ProS**	0.430 KW.H
VL65	0.545 KW.H	**VL45 ProS**	0.510 KW.H
VL74	0.562 KW.H	**VL60 ProS**	0.548 KW.H
IPT20	0.266 KW.H	**VL75 ProD**	0.636 KW.H
		VL90 ProD	0.658 KW.H

This data is only suitable for laboratory testing, and the actual power consumption is subject to actual conditions.

8.8 What is the specification of the fuse of the refrigerator?

The supply line is protected by a 15A fuse located in the refrigerator.

9 Customer Service



If you have any problems or questions about the product

1 Please call us:

+1 (888) 606 1046 (Mon-Fri 9:00am-6:00pm PT)

2 Please email us:

official@icecofreezer.com
(for Amazon/Walmart orders)

support@icecofreezer.com
(for website orders)

support@iceco-us.com
(for other orders)

*Please let us know your order number first for a quick solution.



Important Notice Upon Delivery

1. **Please inspect your item promptly upon delivery.**
   If the product is damaged during transportation, contact our customer service team **within 2 business days** of receipt.

2. **If you encounter any product issues,**
   please provide your **order number** along with **photos or videos** clearly showing the problem. This will help our support team assist you efficiently.

3. **To protect your rights,**
   please keep the **original packaging for at least 30 days** in case a return or exchange is needed. If a product is returned with insufficient packaging and gets damaged during transit, we may be unable to issue a full refund.

10 Safety Instruction

- Please read the user manual and safety instructions carefully before using the appliance.
- By ignoring the safety instructions, the manufacturer cannot be held responsible for the damage.
- The use of accessories that are not recommended by the manufacturer can cause injuries and will Invalidate any warranty that you may have.
- The appliance shall not be exposed to moderate /heavy rain.
- Place the refrigerator on a dry, secure surface, with adequate ventilation.

⚠ **Do not leave the refrigerator unattended in uncovered, outdoor areas exposed to the elements.**

⚠ **Do not use this appliance near direct heat sources, such as an open flame or radiator.**

⚠ **Do not place open containers of liquid inside the fridge.**

⚠ **Please don't put hot/warm food into the fridge directly without letting it cool off. Place/arrange the contents of your fridge securely when using the refrigerator inside a moving vehicle.**

- To maximize energy savings, please make sure the lid is closed and secure, and only open the fridge when you need to.
- The power cable must only be replaced by qualified technical personnel and by an authorized service provider.
- Before carrying out any maintenance operations on the refrigerator, disconnect all power sources from the fridge.
- This appliance is suitable for camping use.

WARNING!

⚠ Please keep the fridge in a well ventilated area.

⚠ Do not use mechanical devices or other means to accelerate the defrosting process, other than those recommended by the manufacturer.

⚠ Do not use electrical devices inside the food storage compartments of the appliance, unless approved/recommended by the manufacturer.

⚠ Do not store explosive items, such as aerosol cans with a flammable propellant in this appliance.

⚠ Risk of fire and electrical shock.

⚠ Do not let hot items touch the plastic parts of the appliance.

⚠ Do not put flammable products or items in, near or on the appliance.

⚠ Do not touch the compressor or the condenser when the fridge is operating. They may be very hot.

⚠ When setting up the appliance, ensure the supply cord is not trapped or damaged.

Further information is provided on the technical data label inside the product.

1. This appliance is not intended for use by persons (including children) with reduced physical, sensory or mental capabilities, or lack of experience and knowledge, unless they have been given supervision or instruction concerning use of the appliance by a person responsible for their safety.

2. Children should be supervised to ensure that they do not play with the appliance.

3. This appliance is intended to be used in applications such as: Car, truck, RV, camping trip, van, boat, SUV, jeep, overlanding life and so on.

4. If the supply cord is damaged, it must be replaced by the manufacturer, its service agent or similarly qualified person in order to avoid a hazard.

5. Do not store explosive substances such as aerosol cans with a flammable propellant in this appliance.

6. **DANGER:** Risk of child entrapment. Before you throw away your old refrigerator or freezer:

***Take off the doors.**

***Leave the shelves in place so that children may not easily climb inside.**

FCC warning:

Any Changes or modifications not expressly approved by the party responsible for compliance could void the user's authority to operate the equipment.

Note:
This equipment has been tested and found to comply with the limits for a Class B digital device, pursuant to part 15 of the FCC Rules. These limits are designed to provide reasonable protection against harmful interference in a residential installation.
This equipment generates uses and can radiate radio frequency energy and, if not installed and used in accordance with the instructions, may cause harmful interference to radio communications.
However, there is no guarantee that interference will not occur in a particular installation.
If this equipment does cause harmful interference to radio or television reception, which can be determined by turning the equipment off and on, the user is encouraged to try to correct the interference by one or more of the following measures:

- -Reorient or relocate the receiving antenna.
- -Increase the separation between the equipment and receiver.
- -Connect the equipment into an outlet on a circuit different from that to which the receiver is connected.
- -Consult the dealer or an experienced radio/TV technician for help.

This device complies with part 15 of the FCC Rules.
Operation is subject to the following two conditions:
(1) This device may not cause harmful interference, and (2) this device must accept any interference received, including interference that may cause undesired operation.

This equipment complies with FCC radiation exposure limits set forth for an uncontrolled environment. This equipment should be installed and operated with minimum distance 20cm between the radiator & your body.

11 Accessories (Purchase Separately)

11.1 Power Support Series



PB250

250Wh
Magnetic Battery



PB1000

1057Wh Battery



80W

Solar Panel

11.2 ICECO Portable Fridge Catalog

Dual Zone



GO20

White/Gray
/Other limited colors

Capacity	21 quarts
Cooling Range	0°F to 50°F
Consumption (KW.H/24H)	0.433
Product Weight	27.5 lbs
Product dimension (L*W*H)	22.4 x 12.6 x 12.4 inches

Single Zone



JP30/40/50 ProS

Black/Other limited colors

Capacity	31/40/50 quarts
Cooling Range	-4°F to 68°F
Consumption (KW.H/24H)	0.323/0.323/0.405
Product Weight	38.6/39.1/40.7 lbs
Product dimension (L*W*H)	28.5 x 13.8 x 15.9/ 28.5 x 13.8 x 18.0/ 28.5 x 13.8 x 21.0 inches

---

Single Zone



VL45/74

Green/Other limited colors

Capacity	47/78 quarts
Cooling Range	0°F to 50°F
Consumption (KW.H/24H)	0.4348/0.416
Product Weight	50.6/62.5 lbs
Product dimension (L*W*H)	27.4 x 15.8 x 19.2/ 32.3 x 19.4 x 19.6 inches

---

Dual Zone



VL60/65

Green/Other limited colors

Capacity	63/68 quarts
Cooling Range	0°F to 50°F
Consumption (KW.H/24H)	0.545/0.562
Product Weight	64/65 lbs
Product dimension (L*W*H)	31.2 x 19.5 x 18.9/ 32.3 x 19.5 x 19.7 inches

---

Single Zone



VL35/45/60 ProS

Black/Other limited colors

Capacity	37/47/63 quarts
Cooling Range	0°F to 50°F
Consumption (KW.H/24H)	0.430/0.510/0.548
Product Weight	48.7/52.2/59.0 lbs
Product dimension (L*W*H)	28.1 x 15.9 x 15.7/ 28.1 x 15.9 x 18.1/ 30.2 x 18.5 x 18.1 inches

Dual Zone



VL75/90 ProD

Black/Other limited colors

Capacity	79/95 quarts
Cooling Range	0°F to 50°F
Consumption (KW.H/24H)	0.636/0.658
Product Weight	69.6/75.1 lbs
Product dimension (L*W*H)	36.5 x 18.5 x 18.1/ 38.3 x 20.7 x 18.1 inches

---

Single Zone/Dual Zone



APL20/35

Silver/Other limited colors

Capacity	21/37 quarts
Cooling Range	-4°F to 68°F
Consumption (KW.H/24H)	0.293/0.381
Product Weight	22.9/32.0 lbs
Product dimension (L*W*H)	25.0 x 14.9 x 11.6/ 27.0 x 14.4 x 15.7 inches

---

Dual Zone



APL55

Black/Silver /Other limited colors

Capacity	58 quarts
Cooling Range	-4°F to 68°F
Consumption (KW.H/24H)	0.326
Product Weight	63.2 lbs
Product dimension (L*W*H)	29.7 x 18.9 x 19.3 inches



+1(888)606 1046

(Mon-Fri 9:00am-6:00pm PT)



official@icecofreezer.com
(for Amazon/Walmart orders)



support@icecofreezer.com
(for website orders)



support@iceco-us.com
(for other orders)