HOLY STONE

14+ age

Instructions For Use

取扱説明書

Gebrauchsanweisung

V 2.0

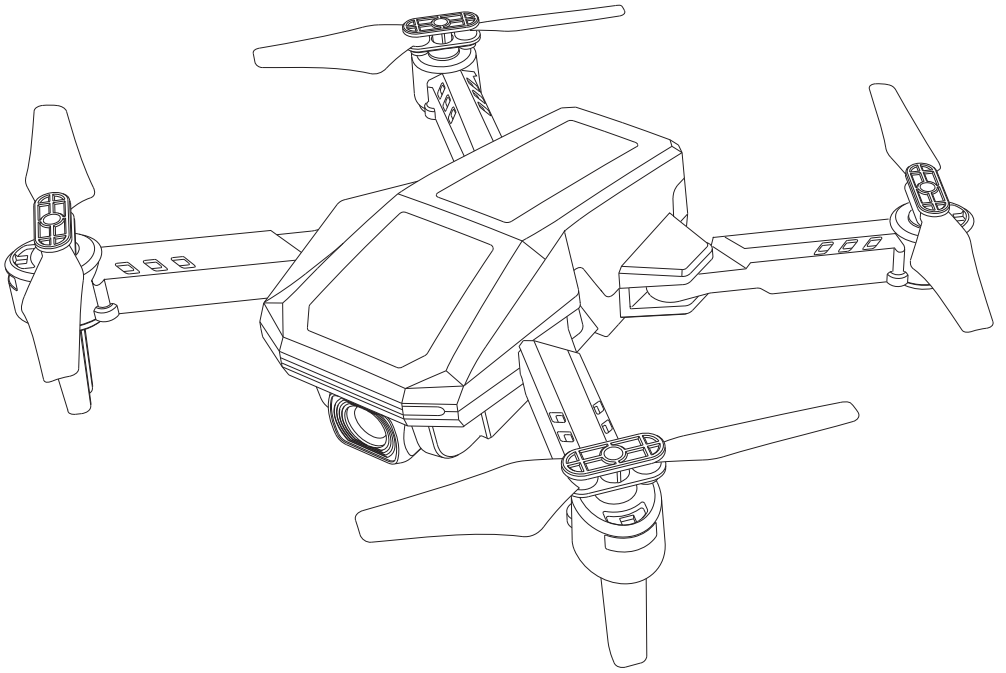

HS430

+1(855) 888-6699

www.holystone.com

usa@holystone.com (USA)
ca@holystone.com (CA)

eu@holystone.com (EU)
jp@holystone.com (JP)

English 01-33

日本語 34-60

Deutsch 61-90

Contents

1.0 Disclaimer & Warning 01
2.0 Safety Guidelines 01
3.0 Maintenance 05
4.0 Package Contents 06
5.0 Drone Details 07
6.0 Transmitter Details 08
7.0 Joystick Mode 09
8.0 Installation
- Drone Battery 10
- Propellers 11
- Propeller Guard 11
- Phone Holder 12

9.0 Charging 13
10.0 Operation Guide
- Download APP 14
- Connect to Wi-Fi 14
- Pairing 15
- Calibrating the Gyro 16
- Unlocking/Locking the Motors 16
- Auto Takeoff 17
- One Key Landing 18

11.0 Functions Details
- Emergency Stop 18
- Trimmer 19
- Speed Switch 20
- Take Photo/Record Video 20
- High-Speed Rotation 21
- Circle Fly 21
- 360° Flip 22
- Altitude-hold Function 22
- Headless Mode 23

12.0 Specifications 25
13.0 Contact Us 27
14.0 General Information 28

1.0 DISCLAIMER & WARNING

1. Please read this Disclaimer & Warning and Safety Guidelines carefully before using our product. This product is not recommended for people under the age of 14. By using this product, you hereby agree to this disclaimer and signify that you have read it fully. You agree that you are responsible for your own conduct and any damage caused while using this product, and any consequence. You agree to only use this product for its designed purposes and in accordance with the local laws, regulations and all applicable policies and guidelines that HolyStone may provide.

2. When using this product, please be sure to strictly abide by the specification requirements and safety guidelines stated in this document. Any personal injury, property damage, legal disputes and all other adverse events caused by the violation of any of the safety instructions or due to any other factor, WILL NOT be HolyStone's responsibility.

2.0 SAFETY GUIDELINES

2.1 Check Before Use

① This product is a high precision drone that integrates various electronic stability and control mechanisms. Please be sure to configure this drone carefully and correctly to ensure safe, accident-free operation.

② Ensure that the batteries of the drone and transmitter are clean, undamaged and fully charged before every use.

③ Ensure that all the propellers are undamaged and are installed in the correct orientation.

④ Please perform a thorough check of the product before each use. Inspect the integrity of the parts, any signs of cracks and wear off on the propellers, battery power and effectiveness of the indicator, etc. If there is any problem found after checking the drone, please refrain from using it until the problem is resolved.

2.2 Flight Environment





Avoid flying over, or near obstacles, crowds, high voltage power lines, trees, airports or bodies of water.
DO NOT fly near strong electromagnetic sources such as power lines and base stations as it may affect the onboard compass.



DO NOT use this drone in adverse weather conditions such as rain, snow, fog, and wind.

2.3 Operation Requirements

① DO NOT use this product to follow any moving vehicles.
② During the flight, turn off the motors only in case of an emergency.
③ When the battery runs low, return the drone back to your starting point.
④ DO NOT use this product if you feel tired, take medicine or feel unwell and drink alcohol.
⑤ Be aware of the volume of noise that the drone produces. Please ensure to keep your distance to avoid ear damage.



⑥ **Stay away from the rotating propellers and motors.**



⑦ **DO NOT fly in any spaces where drones are prohibited. Please respect people's right to privacy by not flying your drone close to others.**

2.4 Use of Battery

① Please ensure batteries are fitted in the correct orientation as shown in the instruction manual.
② Avoid short circuits by fitting the batteries correctly, and do not crush or squeeze the batteries as this could cause the risk of a fire or explosion.
③ DO NOT mix new and old batteries as this can lead to poor performance of the product.
④ Please dispose of used batteries carefully, do not litter and recycle where ever possible.
⑤ DO NOT expose dead batteries to heat or fire or they may explode.
⑥ If the device is not going to be used for an extended period of time, please remove batteries to prevent potential damage to the drone from battery leakage.

⑦ Only use the USB charging cable that comes with the drone to charge the battery.
⑧ DO NOT connect the battery directly to wall outlets or car cigarette -lighter sockets as this will damage your battery since they have different voltages.
⑨ DO NOT attempt to disassemble or modify the battery in any way
⑩ DO NOT use the battery if it gives off an odor, generates heat, becomes discolored, deformed or appears abnormal in any way. If any of these situations occur while the battery is in use or being charged, remove it from the device or charger immediately and discontinue use.
⑪ DO NOT pierce the battery casing with a nail or any other sharp object, break it open with a hammer, or step on it! Dispose or recycle this battery as it may cause personal injury or damage to your drone.
⑫ Always charge the batteries on a fireproof surface and away from combustible materials. DO NOT charge on surfaces that can catch fire, which includes: wood, cloth, carpet.
⑬ DO NOT immerse the battery in water or get it wet.
⑭ DO NOT solder battery terminal in any way.
⑮ Keep batteries out of reach of children or pets.
⑯ DO NOT short-circuit the battery by connecting wires or any other metal object to the positive(+) and negative(-) terminals.



Li-Po Battery Disposal & Recycling

Waste Lithium-polymer batteries must not be placed with household trash.
Please contact local environmental or waste agency or the waste agency
or the supplier of your model or your nearest Li-Po battery recycling center.



3.0 MAINTENANCE

① Clean the drone after each use with a clean, soft cloth.

② Avoid prolonged exposure to direct sunlight and avoid buildup of heat on the drone or batteries.

③ This device is not waterproof and must not be submerged or subjected to water under any circumstance. Failure to keep the device completely dry will result in failure and permanent damage to the unit. Be aware that although it might be dry where you are, droplets of rain or mist from a river or waterfall could damage your drone where it is flying.

④ Frequently check the charging plug and other accessories for signs of damage. If any part of the device or cables are damaged, avoid use or charging until the damaged parts are replaced.

4.0 PACKAGE CONTENTS

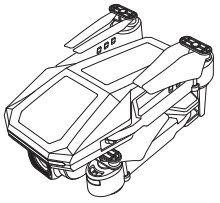	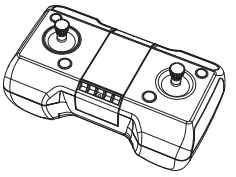	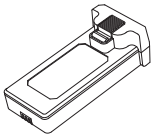
Drone	Transmitter	Drone Battery
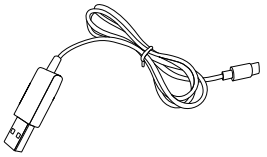	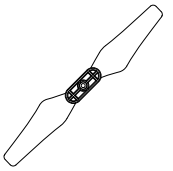	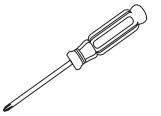
USB Charging Cable	Spare Propellers	Screwdriver
		
Propeller Guard	Instructions For Use	

5.0 DRONE DETAILS

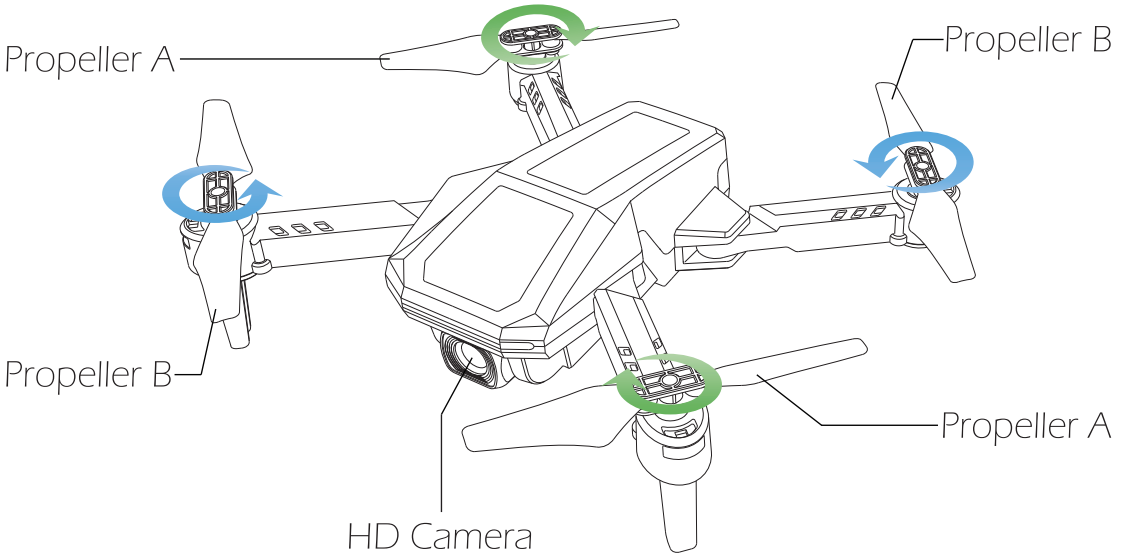

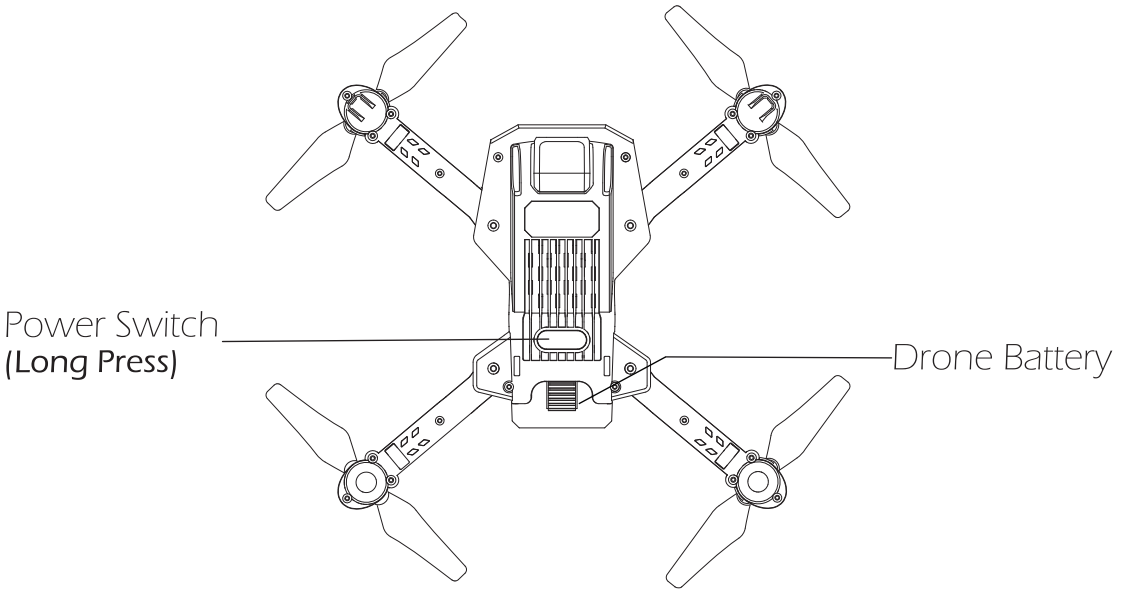

6.0 TRANSMITTER DETAILS

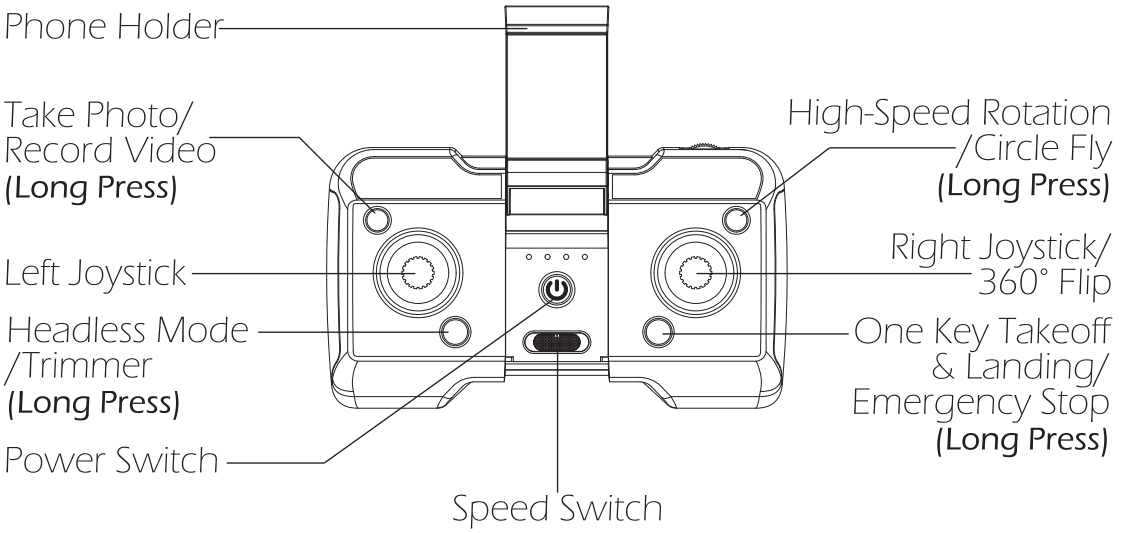

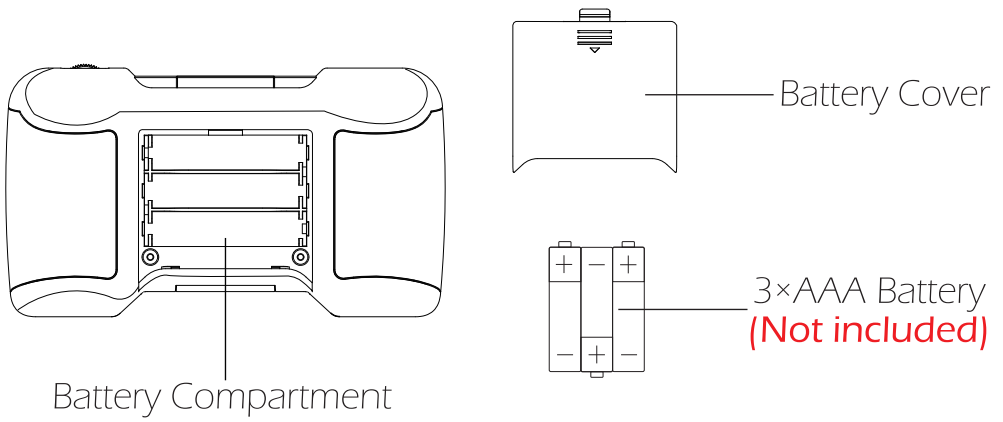

Open the battery cover on the back of the transmitter, insert the three AAA batteries **(Not included)** into the battery compartment, and close the battery cover to complete the installation.

⚠ When installing the batteries, please pay attention to the positive and negative polarity of the battery to ensure the correct installation of the batteries.

7.0 JOYSTICK MODE

7.1 MODE 2 (Default Setting)

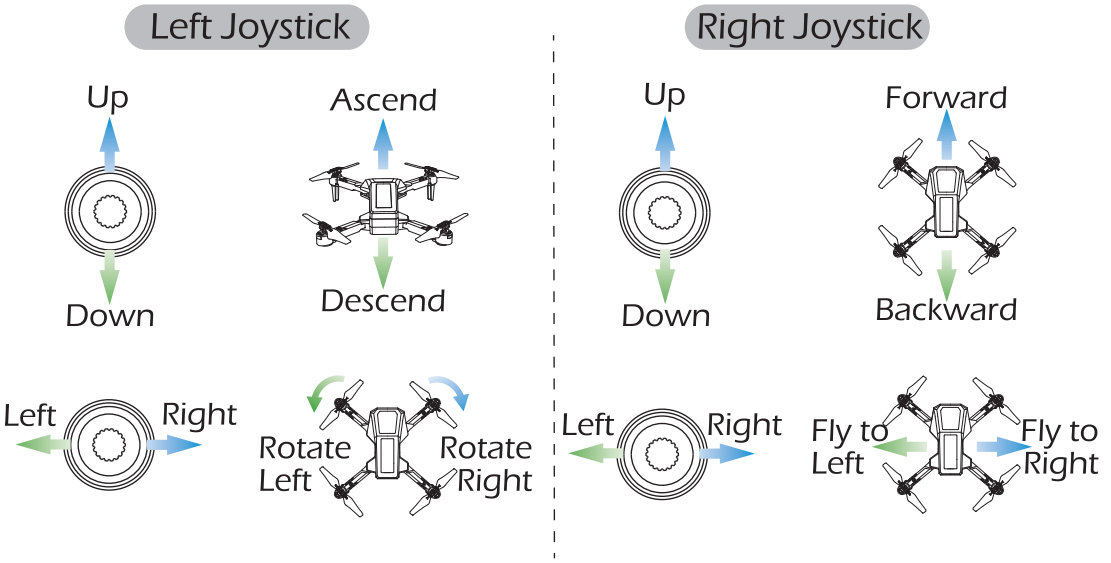

7.2 MODE 1

To enter Mode 1, long press the Trimmer button while turning on the transmitter. (Please do not release the Trimmer button until the transmitter is powered on.)

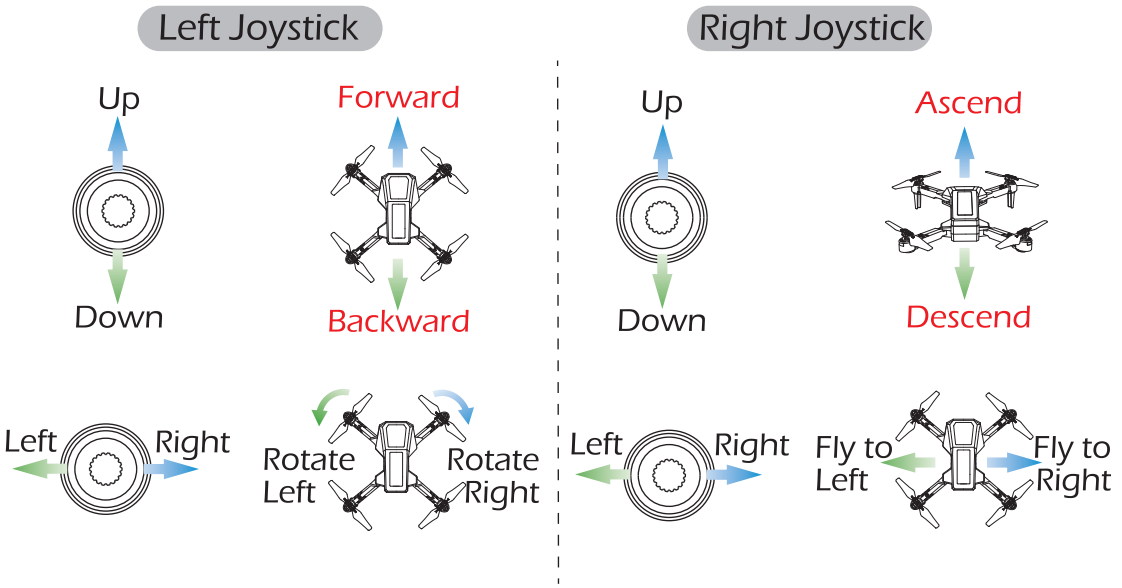

8.0 INSTALLATION

8.1 Drone Battery

Installation:

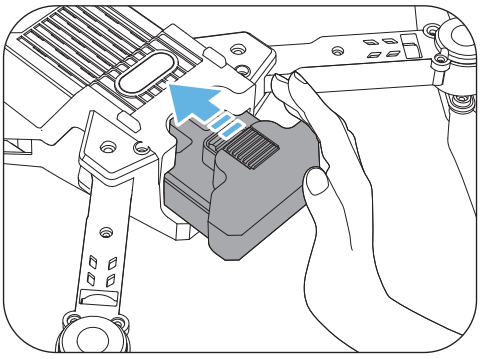

Push the battery correctly into the drone battery compartment. Make sure that you hear a click sound indicating the battery is firmly installed.

Attention: The battery should be installed firmly, failure to do so may affect the flight safety of your drone. The drone may crash due to a power-cut during the flight.

Removal:

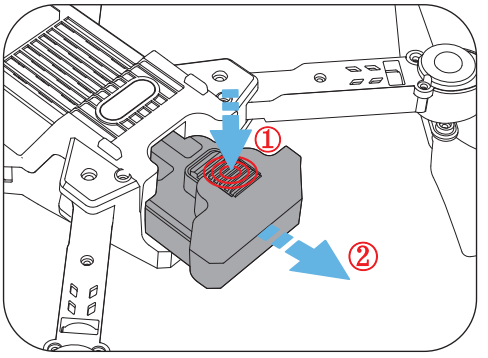

As shown in the above, press the lock button on the battery and pull it back to remove the battery from the fuselage.

8.2 Propellers

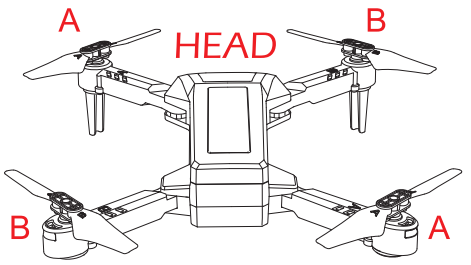

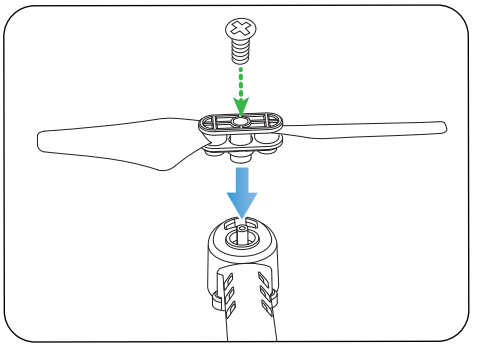

Connect each propeller to its corresponding motor shaft, either position "A/B", then lock the propeller to the motor shaft with a screw.

Attention: Pay attention to the "A" or "B" printed on each propeller. The drone will not fly unless the correct propeller is installed on the correct motor shaft.

8.3 Propeller Guard

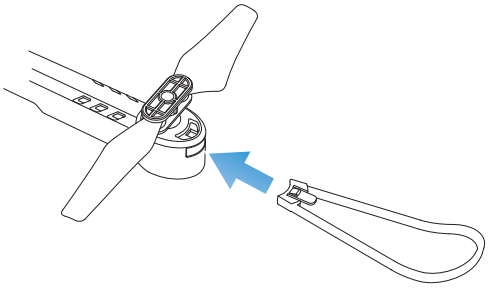

As shown in the picture, install the propeller guard to the motor base.

8.4 Phone Holder

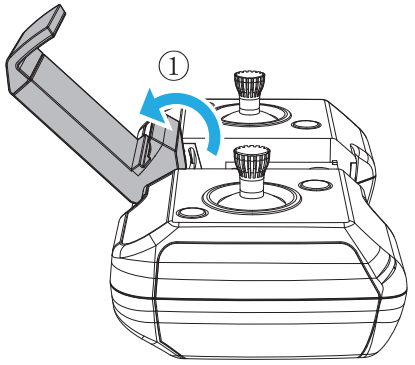

Pic.1

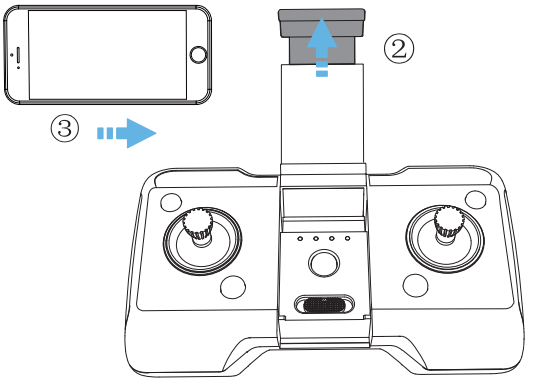

Pic.2

As shown above, open the phone holder completely (**Pic.1**). Adjust the phone holder upward and downward according to the size of your phone (**Pic.2**).

9.0 CHARGING

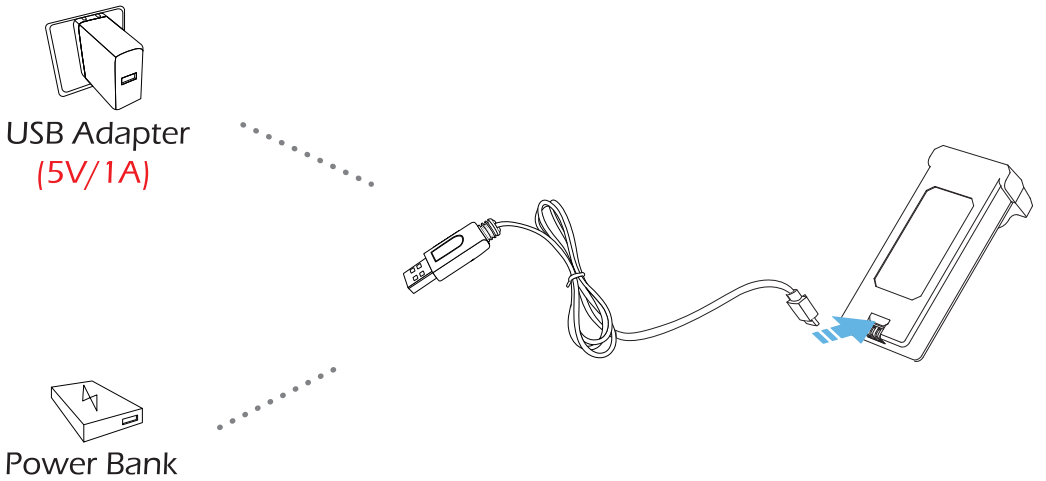

1) When the drone battery runs low, the indicator lights on the drone will blink continuously.

2) Connect the battery with the USB charging cable.

3) Plug the USB charging cable into a USB charging port on the power bank or USB adapter (5V/1A).

4) When the battery is charging, the indicator light on the USB charging cable is red.

When the battery is charged, the indicator light on the USB charging cable turns green.

5) The charging time is about 100 minutes.

⚠ Before charging, please read the introduction of the "Use of Battery" section of the "Safety Guidelines" carefully!

10.0 OPERATION GUIDE

10.1 Download APP

iOS

Android APP on Google play

Scan the QR code, connect to the App Store™ or Google™ Play and download the "HolyStone-FPV" application for free.
Required Operating Systems: iOS 9.0 or later/Android 5.0 or later.

10.2 Connect to Wi-Fi

Connect your phone to the Wi-Fi network created by the drone. You can check the drone's status on the **HolyStone-FPV** App.
① Make sure to turn off Bluetooth, Mobile Data, and VPN. Enter your phone's Wi-Fi settings and click Wi-Fi to search for the Wi-Fi of the drone.
(Make sure to turn on the drone before going to the Wi-Fi settings on your phone)
② Select the Wi-Fi network: HolyStoneFPV-******.
③ Wait for a couple of seconds for your phone to connect to the drone's Wi-Fi.
④ Enter the **HolyStone-FPV** application.
> The connection between your phone and the drone is established automatically.
Attention: The Wi-Fi network created by the drone does not access the Internet.

10.3 Pairing

All of the following operations on this manual uses MODE 2.

① Long press the Power Switch to turn on the drone, the indicator lights of the drone will keep flashing.

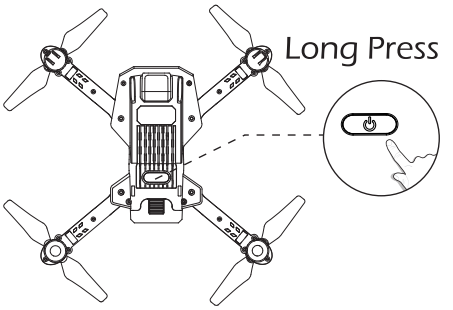

② Place the drone on a flat and level surface with the head forward and the tail facing towards the pilot.

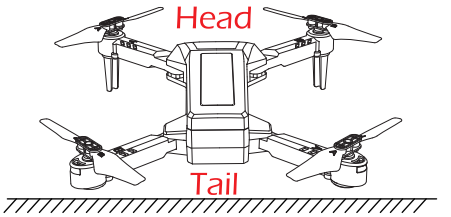

③ Long press the Power Switch to turn on the transmitter, and you will hear the "DiDi" sound, then the indicator lights keep flashing.

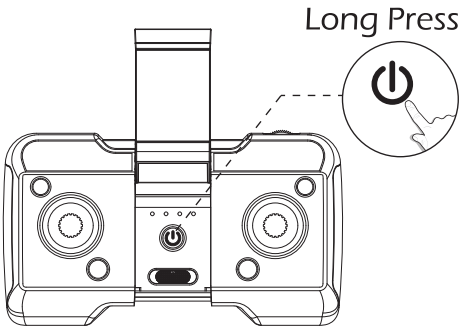

④ Push the throttle joystick up then down to pair the drone with the transmitter. The indicator lights on the drone will turn solid if the drone is paired successfully.

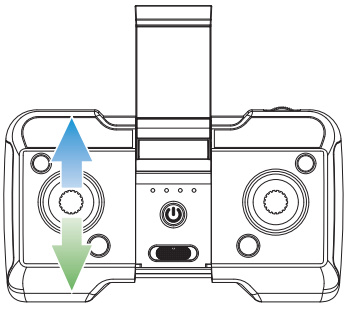

10.4 Calibrating the Gyro

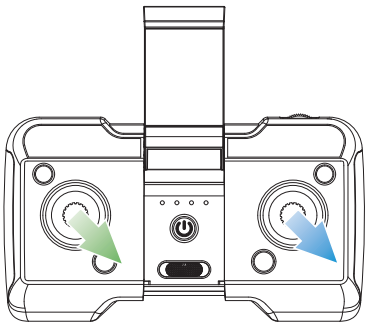

Simultaneously push the left joystick and the right joystick to the bottom right corner to calibrate the gyro. The indicator lights on the drone will blink and turn solid, and the transmitter will send out a long "Di" sound, which indicates the calibration is completed.

Tip: To ensure a stable flight, we suggest that the pilot calibrates the gyro every time after pairing the drone and after a crash.

10.5 Unlocking/Locking the Motors

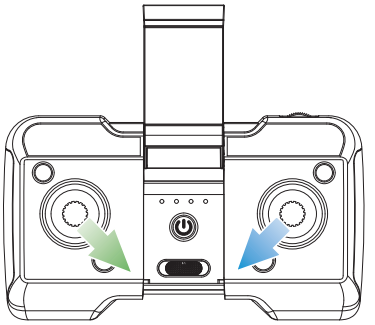

Unlocking the Motors: As shown above, push the left joystick to the bottom right corner and the right joystick to the bottom left corner at the same time to unlock the motors. The motors will start to spin.

Locking the Motors: Repeat this operation, the motors will stop immediately.

10.6 Auto Takeoff

There are two methods to take off the drone.

Method1:

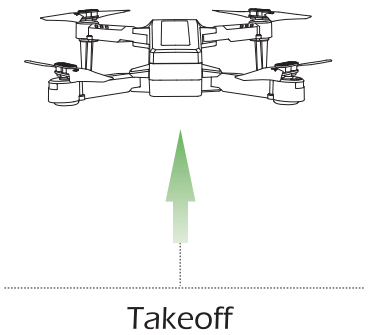

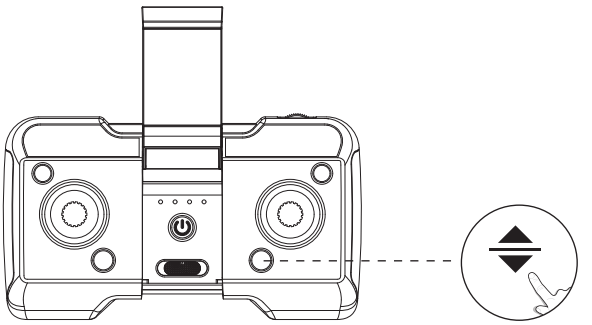

After pairing/calibration, unlock the motors, short press the One Key Takeoff/Landing button, the drone will take off automatically and hover at 4 feet altitude.

Method 2:

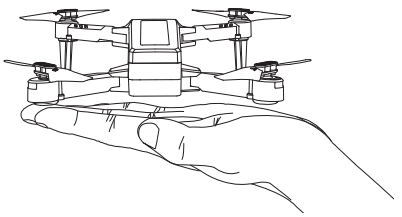

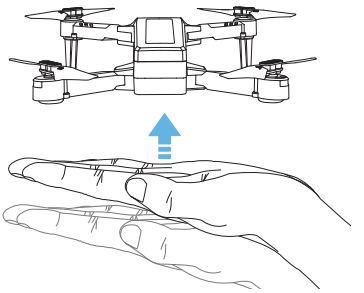

After pairing, pick up the drone and lay it flat on your palm. Gently toss the drone into the air, and it will hover in place.

10.7 One Key Landing

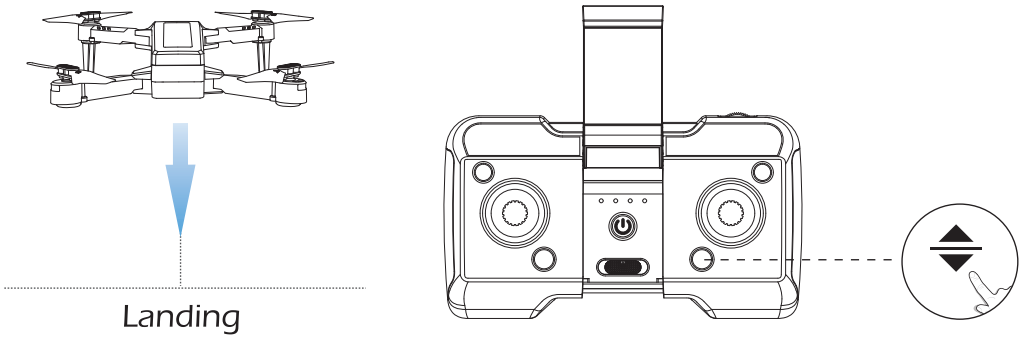

During the flight, short press the One Key Takeoff/Landing button, the drone will land on the ground automatically.

11.0 FUNCTIONS DETAILS

11.1 Emergency Stop

⚠ The Emergency Stop function should only be used in case of emergency during the flight to avoid any damage or injury.

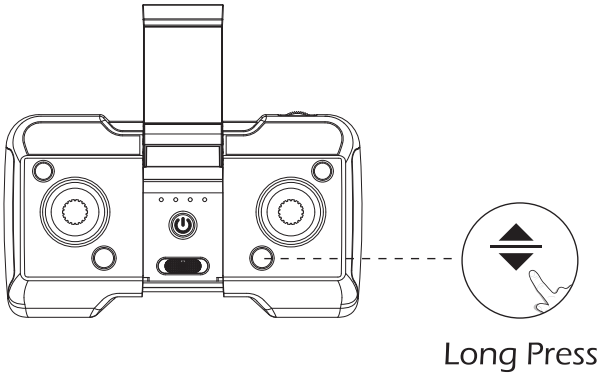

As shown above, long press the One Key Takeoff/Landing button for 2 seconds, the motors will stop immediately.

Attention: Be aware that you risk breakage of the drone if it falls a large distance or hits anything at a high rate of speed.

11.2 Trimmer

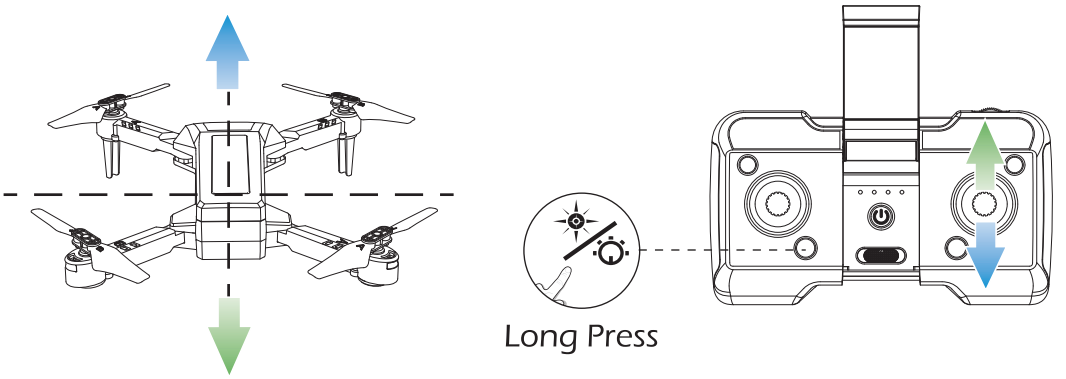

F/B Sideways Drift Trim: If the drone tends to drift forward, hold down the Trimmer button and do not release it while pushing the direction joystick down to re-balance the drone. If the drone tends to drift backward, hold down the Trimmer button and do not release it while pushing the direction joystick up to re-balance the drone.

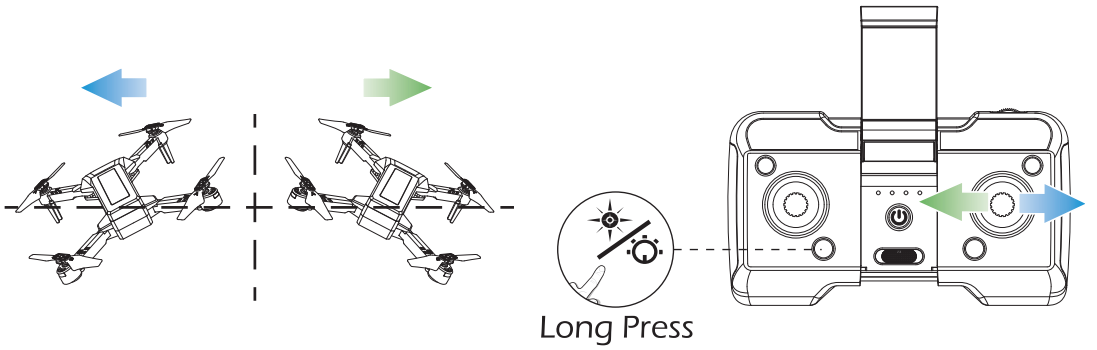

L/R Sideways Drift Trim: If the drone tends to drift left, hold down the Trimmer button and do not release it while pushing the direction joystick right to re-balance the drone. If the drone tends to drift right, hold down the Trimmer button and do not release it while pushing the direction joystick left to re-balance the drone.

11.3 Speed Switch

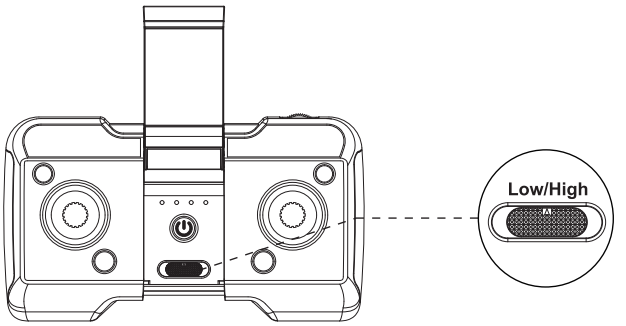

This drone comes with 2 speed modes (Low/High). As shown above, push the Speed Switch button to the left, the transmitter sends out a "Di" sound, indicating Low Speed. Push the Speed Switch button to the right, the transmitter sends out a "DiDi" sound, indicating High Speed.

11.4 Take Photo/Record Video

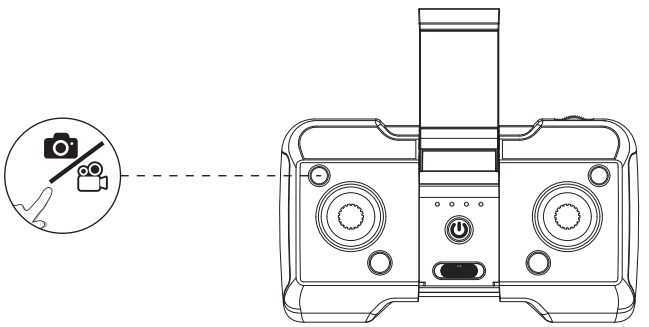

Take Photo: Short press the Take Photo/Record Video button, the transmitter sends out a "Di" sound, indicating that the camera has taken one photo successfully.

Record Video: Long press the Take Photo/Record Video button, the transmitter sends out a "DiDi" sound, indicating that the camera is recording video. Long press the button again to exit the Record Video.

11.5 High-Speed Rotation

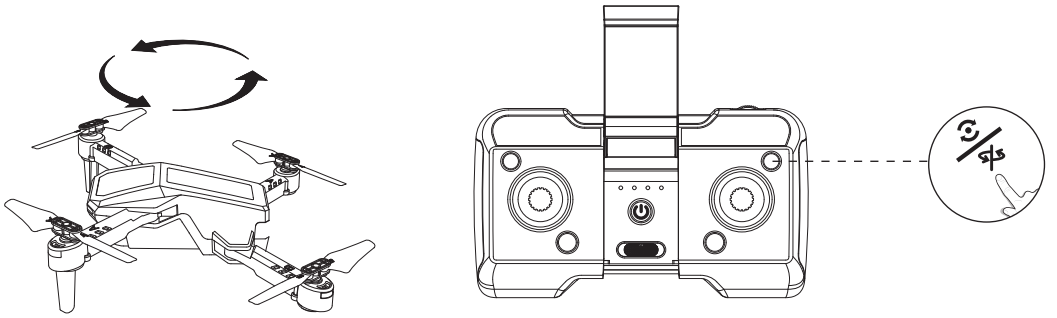

During the flight, short press the High-Speed Rotation button, the transmitter will make a "Di" sound, which indicates that the drone enters the High-Speed Rotation function. The drone will exit the High-Speed Rotation function automatically 10 seconds after, and you can also push the direction joystick to any direction to stop the rotation.

11.6 Circle Fly

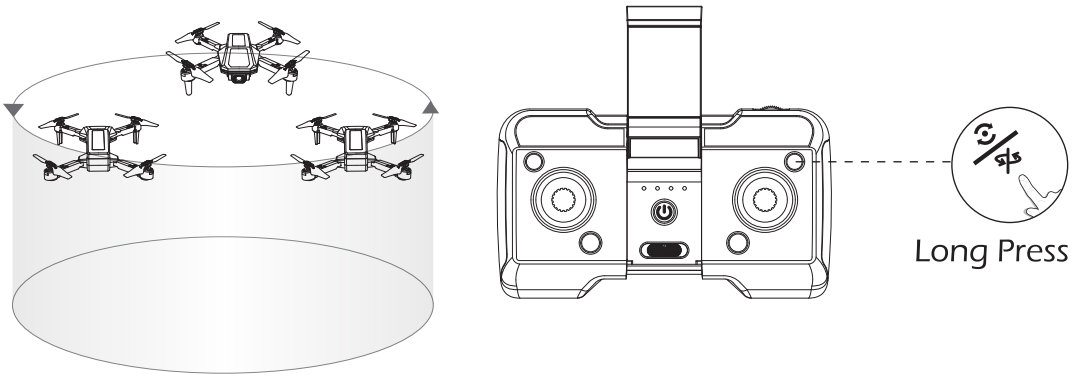

During the flight, long press the Circle Fly button, the transmitter will make a long "Di" sound, which indicates that the drone enters the Circle Fly. This drone will exit the Circle Fly function automatically 10 seconds after, and you can also push the direction joystick to any direction to exit the Circle Fly.

11.7 360° Flip

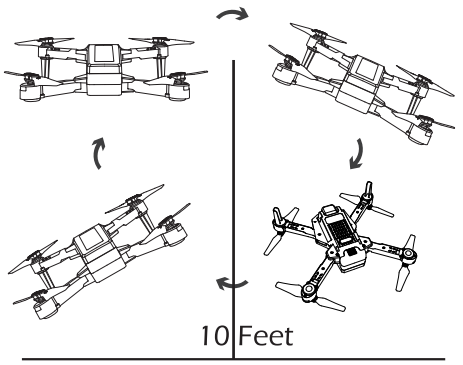

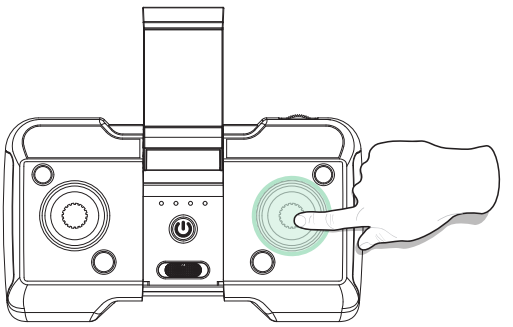

When you get familiar with all the functions of the drone, you can try this amazing flip mode. When you fly the drone at least 10 feet, press in the Right Joystick on the transmitter, then push the right joystick Forward/Backward or Left/Right, and the drone will do a flip towards the corresponding direction.

Tip: This function will perform better when the battery is fully charged. If you do not operate after entering the 360° Flip, short press the right joystick again to exit the 360° Flip.

11.8 Altitude-hold Function

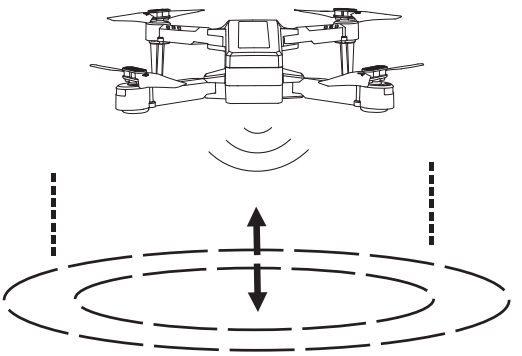

The drone is designed with an altitude-hold function so the drone can maintain its altitude after you release the left joystick. (The left joystick will automatically spring back to the middle)

11.9 Headless Mode

⚠ Please familiarize yourself with the Headless Mode function first before using this mode. Otherwise, it is easy to lose the drone and cause unnecessary loss.

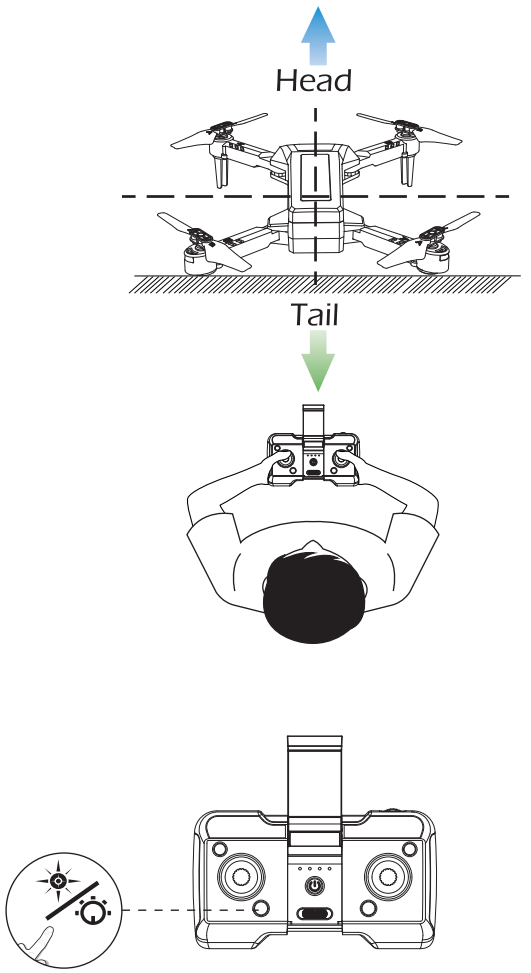

1. After pairing/calibration, short press the Headless Mode button on the transmitter. In Headless Mode, the indicator lights of the drone will flash continuously, and the transmitter sends out beeps continuously.
2. Press the Headless Mode button again, and you will hear a beep from the transmitter, indicating the drone exits the Headless Mode.

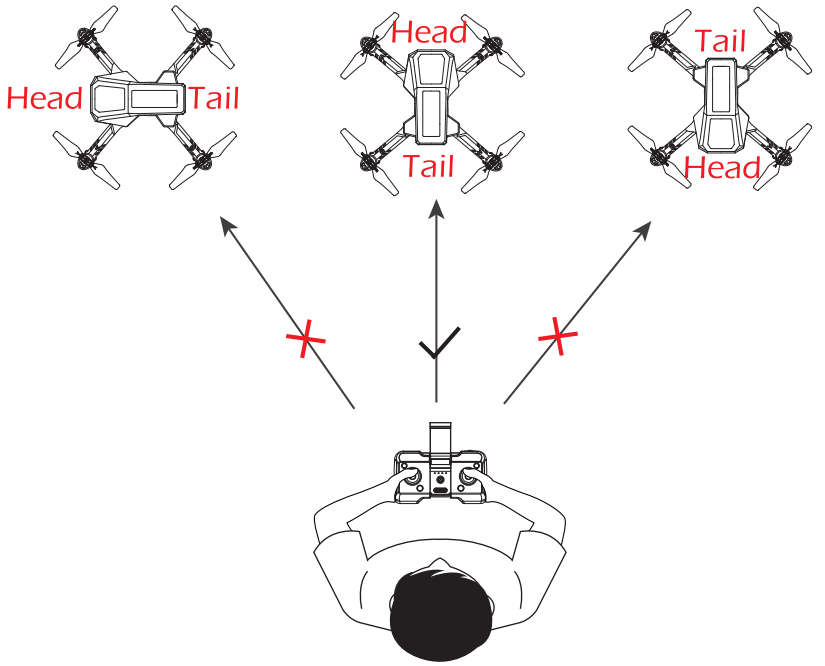

Please make the pilot stays facing the same direction that the drone head faces at take-off.

While in Headless Mode, pushing the direction joystick forward will make it fly in the direction that the head of the drone faces when it takes off. To make sure the pilot can tell drone's direction, during the flight, we recommend that pilot stays facing the same direction that the drone head faces at take-off. By doing so it is ensured that when the pilot pushes the direction joystick forward/backward, the drone will fly forward/backward toward him/her. If the pilot moves the direction joystick left/right, the drone will move left/right relative to him/her.

12.0 SPECIFICATIONS

- DRONE

  Model: HS430

  Weight: 75g/2.65oz

  Max Flight Time: 13 minutes (per battery)

  Motor Model: 716

  Operating Temperature Range: 32° to 104°F (0° to 40°C)

  Size: 187*135*43mm(Unfolded)

  93*63*43mm(Folded)

- DRONE BATTERY

  Capacity: 730mAh

  Voltage: 3.85 V

  Battery Type: Lithium-ion Polymer Battery

  Energy: 2.81Wh

  Charging Temperature Range: 41° to 104°F (5° to 40°C)

  Charging Time: 100minutes (Depends on charging power and remaining battery power)

- TRANSMITTER

  Operating Frequency: 2452-2474MHz

  Max Flight Distance: 131feet/40m (Outdoors and unobstructed)

  Operating Temperature Range: 32° to 104°F (0° to 40°C)

  Battery Type: 3*1.5V AAA Battery (Not included)

- CAMERA

  Operating Frequency: 2417MHz

  Lens Angle: 67°

  Manual Adjustable Range: -90°~0°

  Photo Resolution: HD1920 x 1080P

  Video Resolution: HD1920 x 1080P

  Max Transmission Distance: 98feet/30m (Outdoors and unobstructed)

  Live View Quality: 20fps

  Photo Formats: JPEG

  Video Formats: MP4/AVI

  Operating Temperature Range: 32° to 104°F (0° to 40°C)

- USB CHARGING CABLE

  Input: 5V/1A

  Rated Power: ≤5W

13.0 CONTACT US

Please do not hesitate to contact us if you need further support.

4:00 PM ~ 7:00 AM (PST)

usa@holystone.com (America)

ca@holystone.com (Canada)

eu@holystone.com (Europe)

+1(855) 888-6699

For online support, please scan this code with Live Chat

14.0 GENERAL INFORMATION

FCC Notice:

This device complies with Part 15 of the FCC Rules.

Operation is subject to the following two conditions:

(1) This device may not cause harmful interference, and

(2) This device must accept any interference received, including interference that may cause undesired operation.

The Supplier's Declaration of Conformity is available at the following address:

https://www.holystone.com/Download/US/HS430_FCC_sDoC.pdf

NOTE: This equipment has been tested and found to comply with the limits for a Class B digital device, pursuant to Part 15 of the FCC Rules. These limits are designed to provide reasonable protection against harmful interference in a residential installation. This equipment generates uses and can radiate radio frequency energy and, if not installed and used in accordance with the instructions, may cause harmful interference to radio communications. However, there is no guarantee that interference will not occur in a particular installation. If this equipment does cause harmful interference to radio or television reception, which can be determined by turning the equipment off and on, the user is encouraged to try to correct the interference by one or more of the following measures:

—Reorient or relocate the receiving antenna.

—Increase the separation between the equipment and receiver.

—Connect the equipment into an outlet on a circuit different from that to which the receiver is connected.

—Consult the dealer or an experienced radio/TV technician for help.

WARNING: Changes or modifications not expressly approved by the party responsible for compliance could void the user's authority to operate the equipment.

RF Exposure

The equipment complies with FCC radiation exposure limits set forth for an uncontrolled environment. This device should be installed and operated with minimum distance 20cm between the radiator & your body.

IC Notice:

This device complies with Canada Industry licence-exempt RSS standard (s). Operation is subject to the following two conditions:

(1) this device may not cause interference; and

(2) this device must accept any interference. Including interference that may cause undesired operation of the device.

CAN ICES-3 (B)

Avis d'Industrie Canada

Le présent appareil est conforme aux CNR d'industrie Canada applicables aux appareils radio exem pts de licence L'exploitation est autorisée aux deux conditions suivantes:

1) l'appareil ne doit pas produire de brouillage; et

2) l'utillsateur de l'appareil doit accepterbrouillage radioélectrique subi meme si le brouillage est susceptible d'encompromettre le fonctionnement. mauvais fonctionnement de l'appareil. Cet appareil numériquie de la classe B est conforme à la norme NMB-003 du Canada.

CAN NMB-3 (B)

RF Exposure

Radiation Exposure Statement:

This equipment complies with IC radiation exposure limits set forth for an uncontrolled environment. This equipment should be installed and operated with minimum distance 20cm between the radiator & your body.

Déclaration d'exposition aux radiations:

Cet équipement est conforme aux limites d'exposition aux rayonnements IC établies pour un environnement non contrôlé. Cet équipement doit être installé et utilisé avec un minimum de 20 cm de distance entre lasource de rayonnement et votre corps.

HOW TO RECYCLE THIS PRODUCT

This symbol on the product or its documentation indicates that it MUST not be disposed of together with household waste.

Uncontrolled waste disposal may harm the environment or human health.

Please separate your device from other types of waste of recycling it responsibly.

This will help to foster the sustainable re-use of material resources.

We suggest you contact your retailer, inquire at your local town hall or business store to find out where and how the drone can be recycled.



BATTERY WARNING:

1. Failure to follow all the instructions may result in serious injury, irreparable damage to the battery may cause a fire, smoke or explosion as well.

2. Always check the battery's condition before charging or using it.

3. Please replace the battery if the battery is dropped or has any peculiar smell, overheating, discoloration, deformation or leakage happens.
4. Never use anything other than the approved LiPo Charger to charge the battery. Always use a balancing charger for LiPo cells or a LiPo cell balancer. It is recommended that you use the one provided with the product.
5. The battery temperature must never exceed 60°C(140°F) otherwise the battery could be damaged or ignited.
6. Never charge the battery on a flammable surface, near flammable products or inside a vehicle(It is better to place the battery on a non-flammable and non-conductive surface).
7. Never leave the battery unattended during the charging process. Never disassemble or modify the housing's wiring, or puncture the cells. Always ensure that the charger output voltage corresponds to the voltage of the battery. Do not short circuit the batteries.
8. Never expose the Li-Po battery to moisture or direct sunlight, or store it in a place where temperatures could exceed 60°C(car in the sun, for example).
9. Always keep it out of reach of children.
10. Improper battery use may result in a fire, explosion or other hazards.
11. Non-rechargeable batteries are not allowed to be recharged. Rechargeable batteries should be charged under adults' supervision.
12. DO NOT mix different types of batteries including the new and used ones.
13. Batteries MUST be inserted with the correct polarity.
14. The supply terminals MUST not to be short-circuited. Regular examination of transformer or battery charger for any damage to their cords, plugs, enclosures and other parts MUST be done. If there is damage, they MUST not be used until the damage has been repaired.

15. The packaging has to be kept since it contains important information.
16. The toy is should only be connected to the equipment with symbol Class II. 

EU RF Power(EIRP): <10 dBm (2452MHz ~ 2474 MHz)

Caution

1.The max operating of the EUT is 45°C. and shouldn't be lower than -10°C.
2.The device complies with RF specifications when the device used at 0mm from your body.
3.Declaration of Conformity.

We, Xiamen Huoshiquan Import & Export CO.,LTD
hereby, declare that the compliance of the essential requirements with the
Directive 2014/53/EU, the RoHS Directive 2011/65/EU and Safety Directive 2009/48/EC have been fully fulfilled on our product with indication below:
Product Name: Remote control four axis series
Model/Mark: HS430/HOLYSTONE
The Statement of compliance is available at the following address:
http://www.holystone.com/Download/CE/HS430_EU_DOC.pdf

This product can be used among EU member states.

MANUFACTURER INFORMATION

Manufactured by

Xiamen Huoshiquan Import & Export CO.,LTD.

Address: Unit. 33, Room 806, NO. 2 Huming Road, Siming District, Xiamen, China

+1(855) 888-6699



MADE IN CHINA(CN)