HAWKE®

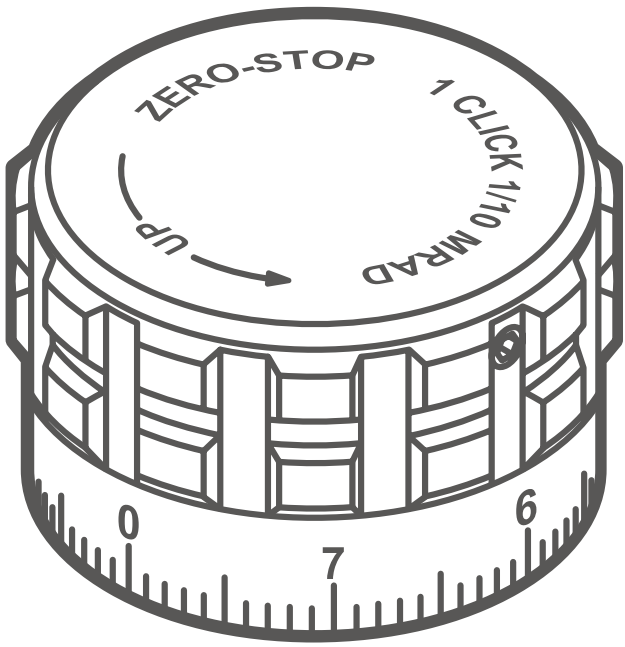

ZERO LOCK 'N' STOP TURRET

After zeroing your riflescope:

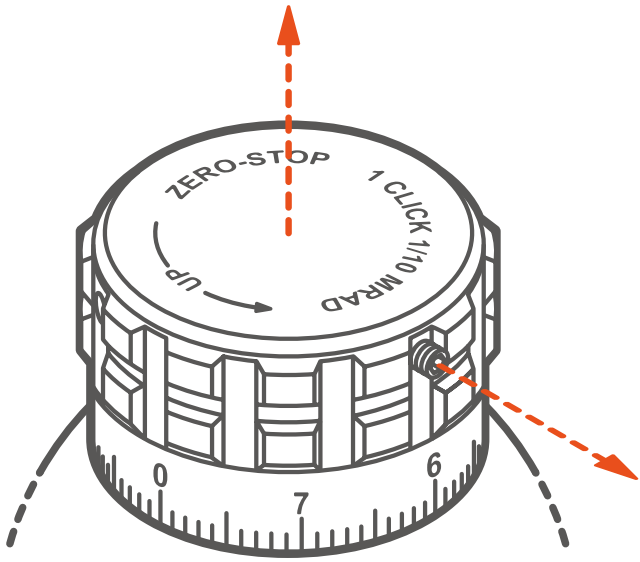

1. Loosen the 3 screws and remove the outer turret cap.

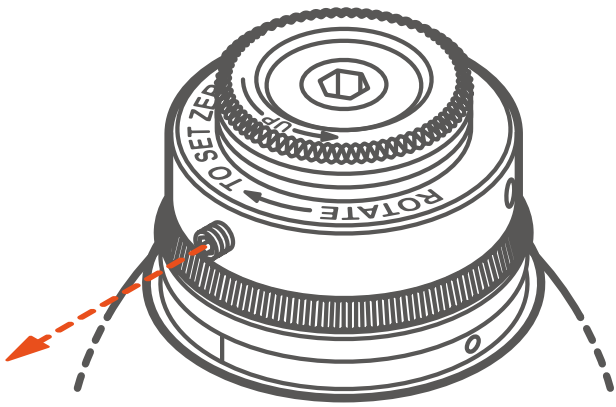

2. Loosen the 3 screws on the ‘Rotate To Set Zero-Stop’ ring.

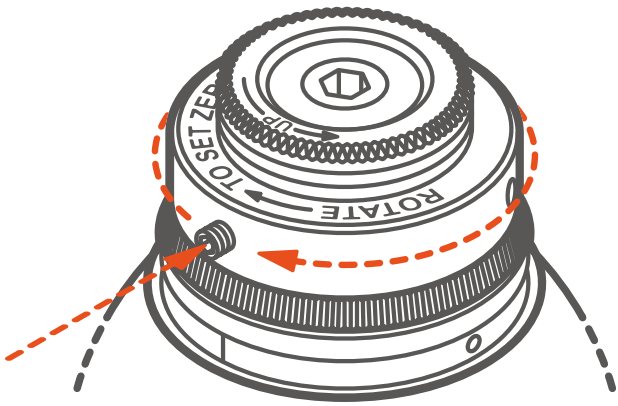

3. Rotate the Zero-Stop ring clockwise until stop and tighten the 3 screws.

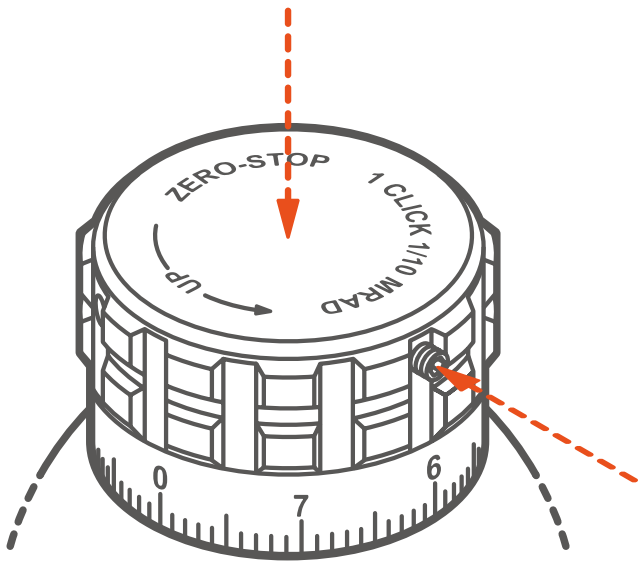

4. Reinstall the outer turret cap and align the ‘0’ marker with the click marker.

HAWKE®

FEATURES

Zero-Stop return to zero

Push/pull locking

Zero-Stop can be removed

Accurate & repeatable clicks

Precision engineered

ZERO LOCK 'N' STOP TURRET