MODELS T27555-56, T27575
PORTABLE
BLADE WELDER
INSTRUCTIONS

For questions or help with this product contact Tech Support at (570) 546-9663 or techsupport@grizzly.com

Introduction

This portable blade welder can cut, weld, anneal, and grind bandsaw blades, which is commonly done in the following situations:

- To rejoin a blade that has been purposely cut for making an internal contour cut.
- To repair a broken blade that is still sharp and useful.
- To fabricate a new blade from bulk blade material.



Figure 1. Model T27556 blade welder.

⚠WARNING





Hot sparks from the welding process can damage your eyes and skin. During welding operations, always wear safety goggles and protective gear to reduce your risk.

Specifications

T27555 2.0 KVA Blade Welder

Range of Blade Widths (Carbon Steel)	1/8"–1/2"
Range of Blade Widths (Bi-Metal)	1/8"–3/8"
Blade Thickness	0.025"
Power Supply Requirement	110V, 15A
Prewired Voltage	110V
Welding Power	2.0 kVA
Shipping Weight	44 lbs.

T27575 2.4 KVA Blade Welder

Range of Blade Widths (Carbon Steel)	1/8"–5/8"
Range of Blade Widths (Bi-Metal)	1/8"–1/2"
Blade Thickness	0.025"
Power Supply Requirement	110V, 15A
Prewired Voltage	110V
Welding Power	2.4 kVA
Shipping Weight	46 lbs.

T27556 4.2 KVA Blade Welder

Range of Blade Widths (Carbon Steel)	1/8"–3/4"
Range of Blade Widths (Bi-Metal)	1/8"–5/8"
Blade Thickness	0.025"
Power Supply Requirement	220V, 15A
Welding Power	4.2 kVA
Shipping Weight	50 lbs.

COPYRIGHT © FEBRUARY, 2016 BY GRIZZLY INDUSTRIAL, INC. REVISED JULY, 2017 (BL)
NO PORTION OF THIS MANUAL MAY BE REPRODUCED IN ANY SHAPE OR FORM WITHOUT THE WRITTEN APPROVAL OF GRIZZLY INDUSTRIAL, INC.
(FOR MODELS MFD. SINCE 12/15) #BL17991 PRINTED IN TAIWAN

Identification

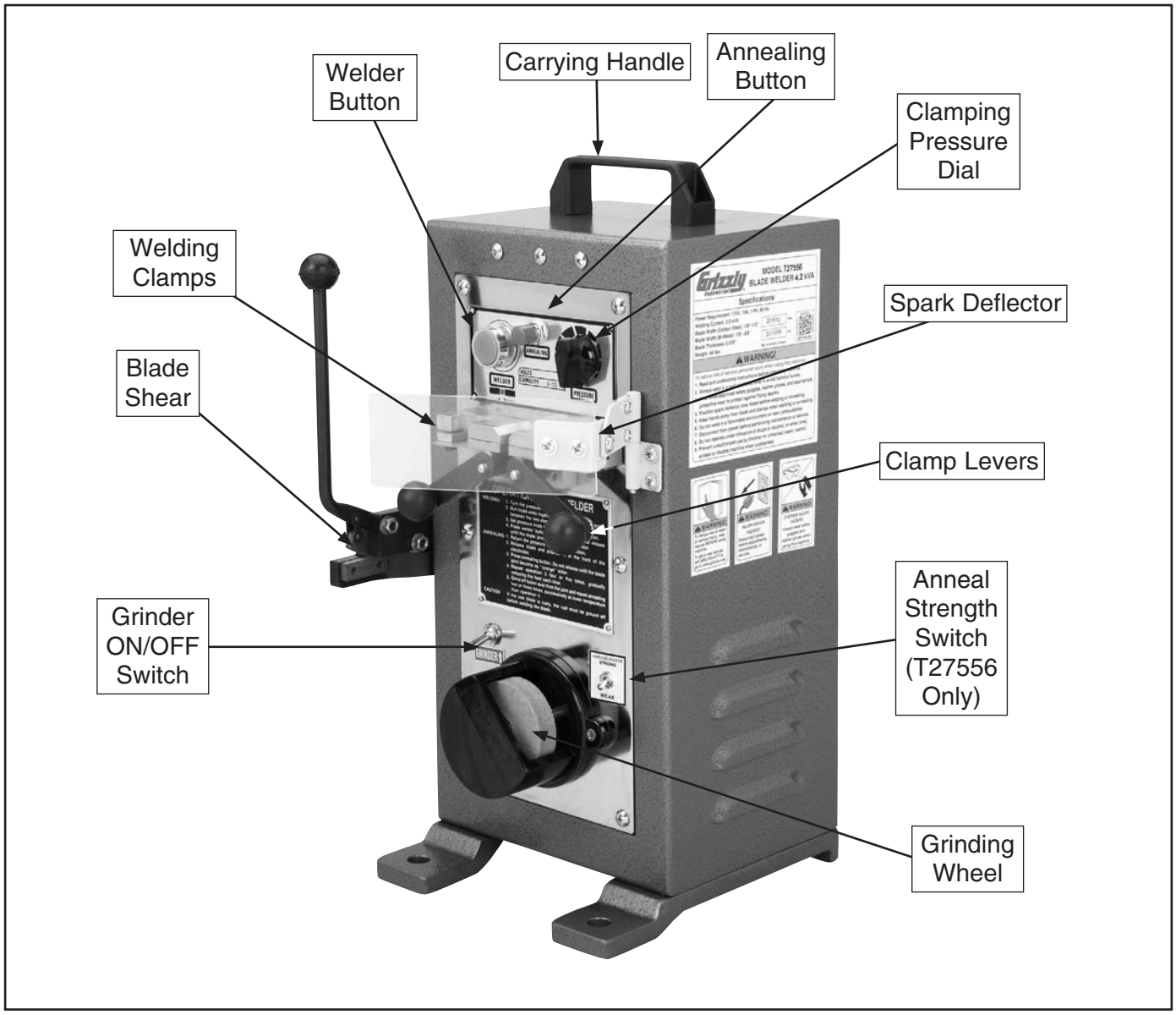

Figure 2. Identification (Model T27556 shown).

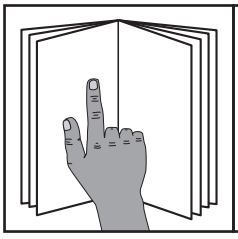

⚠WARNING

To reduce your risk of serious injury, read this entire manual BEFORE using machine.

⚠WARNING
Safety for Blade Welders

WELDING FUMES. Breathing welding fumes can cause respiratory damage. Maintain adequate ventilation during and after welding operations.

PREVENT FIRES. Welding work zones must be kept clear of flammable liquids or gases, such as gasoline or solvents, and combustible solids, such as paper or wood, especially any built-up dust from this same material. Provide approved fire extinguishing equipment for the welding zone. Stay alert for sparks and spatter thrown into cracks and crevices that can start a smoldering fire.

PERSONAL PROTECTIVE EQUIPMENT. Wear eye and body protection approved for welding operations, such as safety goggles, a face shield, clean and oil-free protective clothing, leather gloves, long sleeves, and cuffless pants. Protect other people and property in the welding work zone from exposure to sparks and hot spatter.

STABLE WORK SURFACE. Always make sure the welder is mounted on a stable and lever surface before operations. If the welder unexpectedly moves during operation, burns, lacerations, or abrasion injuries could occur.

ABRASION INJURIES. The grinding wheel can remove skin very quickly. Always keep your fingers and hands away from the spinning grinding wheel to reduce this risk.

ELECTRIC & MAGNETIC FIELDS (EMF). Welding operations create EMF around the welding equipment and workpieces. Workers who have pacemakers must consult with their physician before using this equipment or stay at least 50 feet from welding operations.

EQUIPMENT MAINTENANCE. Make sure equipment inspections and maintenance are performed by a qualified person. Stop the welding operation and disconnect the welder from power if the equipment is damaged or malfunctions.

BLADE BREAKAGE. Blades that are not welded correctly can break under the stresses of using them on the bandsaw. Have only one weld on a blade. Always inspect the weld as instructed. Make sure the annealing and grinding process does not compromise the integrity of the weld. If you have any doubt about weld quality, start over.

NOTICE

If you have never used this type of welder before, WE STRONGLY RECOMMEND that you read books, trade magazines, or get formal training before beginning any projects. Regardless of the content in this section, Grizzly Industrial will not be held liable for accidents caused by lack of training.

Power Supply

Circuit Information

A power supply circuit includes all electrical equipment between the breaker box or fuse panel in the building and the machine. The power supply circuit used for this machine must be sized to safely handle the full-load current drawn from the machine for an extended period of time. (If this machine is connected to a circuit protected by fuses, use a time delay fuse marked D.)

Note: *Circuit requirements in this manual apply to a dedicated circuit—where only one machine will be running on the circuit at a time. If machine will be connected to a shared circuit where multiple machines may be running at the same time, consult an electrician or qualified service personnel to ensure circuit is properly sized for safe operation.*

Extension Cords

We do not recommend using an extension cord with this machine. If you must use an extension cord, only use it if absolutely necessary and only on a temporary basis.

Extension cords cause voltage drop, which can damage electrical components and shorten motor life. Voltage drop increases as the extension cord size gets longer and the gauge size gets smaller (higher gauge numbers indicate smaller sizes).

Any extension cord used with this machine must be in good condition and contain a ground wire and matching plug/receptacle. Additionally, it must meet the following size requirements:

Minimum Gauge Size .....12 AWG
Maximum Length (Shorter is Better).....50 ft.

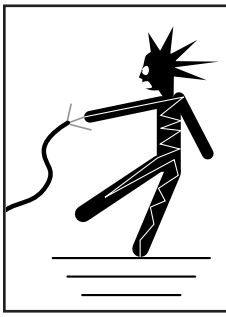

⚠WARNING

Electrocution, fire, shock, or equipment damage may occur if machine is not properly grounded and connected to power supply.

⚠CAUTION

For your own safety and protection of property, consult an electrician if you are unsure about wiring practices or electrical codes in your area.

Grounding Requirements

This machine MUST be grounded. In the event of certain malfunctions or breakdowns, grounding reduces the risk of electric shock by providing a path of least resistance for electric current.

Improper connection of the equipment-grounding wire can result in a risk of electric shock. The wire with green insulation (with or without yellow stripes) is the equipment-grounding wire. If repair or replacement of the power cord or plug is necessary, do not connect the equipment-grounding wire to a live (current carrying) terminal.

Check with a qualified electrician or service personnel if you do not understand these grounding requirements, or if you are in doubt about whether the tool is properly grounded. If you ever notice that a cord or plug is damaged or worn, disconnect it from power, and immediately replace it with a new one.

T27555 & T27575 Circuit Requirements

This machine is prewired to operate on a power supply circuit that has a verified ground and meets the following requirements:

Nominal Voltage 110V, 115V, 120V
Cycle ..... 60 Hz
Phase ..... Single-Phase
Power Supply Circuit ..... 15 Amps
Plug/Receptacle ..... NEMA 5-15

This machine is equipped with a power cord that has an equipment-grounding wire and a grounding plug. Only insert plug into a matching receptacle (outlet) that is properly installed and grounded in accordance with all local codes and ordinances. DO NOT modify the provided plug!

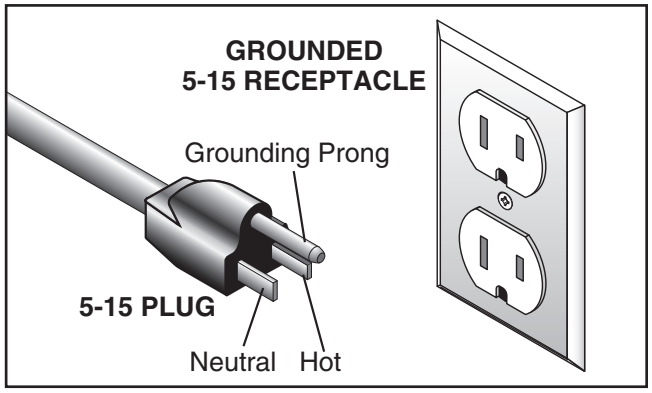

Figure 3. Typical 5-15 plug and receptacle.

⚠CAUTION

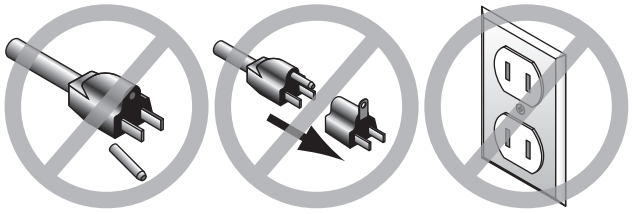

SHOCK HAZARD!
Two-prong outlets do not meet the grounding requirements for this machine. Do not modify or use an adapter on the plug provided—if it will not fit the outlet, have a qualified electrician install the proper outlet with a verified ground.

T27556 Circuit Requirements

This machine is prewired to operate on a power supply circuit that has a verified ground and meets the following requirements:

Nominal Voltage 208V, 220V, 230V, 240V
Cycle ..... 60 Hz
Phase ..... Single-Phase
Power Supply Circuit ..... 15 Amps
Plug/Receptacle ..... NEMA 6-15

This machine is equipped with a power cord that has an equipment-grounding wire and a grounding plug. Only insert plug into a matching receptacle (outlet) that is properly installed and grounded in accordance with all local codes and ordinances. DO NOT modify the provided plug!

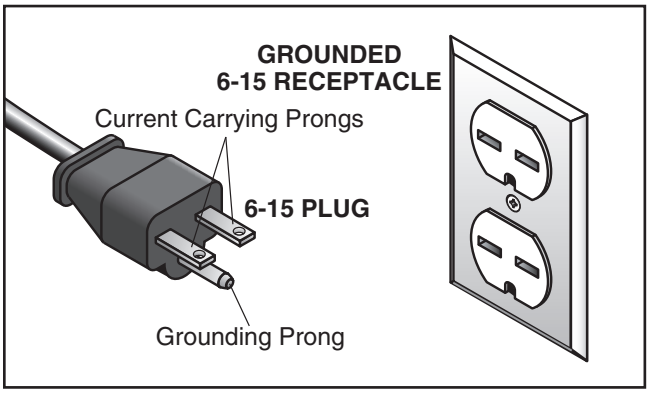

Figure 4. Typical 6-15 plug and receptacle.

⚠CAUTION

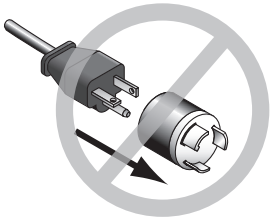

No adapter should be used with plug. If plug does not fit available receptacle, or if machine must be reconnected for use on a different type of circuit, reconnection must be performed by an electrician or qualified service personnel, and it must comply with all local codes and ordinances.

Operations

Overview

This blade welder uses electrical resistance (induction) to weld bandsaw blade ends. Afterwards, the annealing process gives the weld strength and flexibility.

⚠WARNING





Hot sparks from the welding process can damage your eyes and skin. During welding operations, always wear safety goggles and protective gear to reduce your risk.

Blade Shear

To use the blade shear, place the back of the blade evenly against the back of the blade shear, as shown in **Figure 5**, then firmly pull the handle down to square off the blade end.

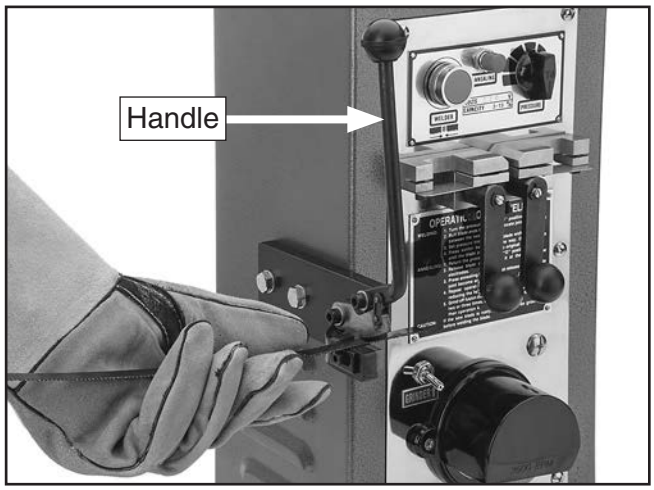

Figure 5. Using the blade shear to cut the blade.

Blade Preparation

When welding the blade, the ends must evenly butt up against each other and be square. This will ensure the that the weld is of even thickness for the full width of the blade.

To prepare the blade for welding:

1. Be sure to grind off any teeth that are in the blade welding zone (see **Figures 6–7**).

   Note: *Make sure the blade ends are even with each other after grinding them.*

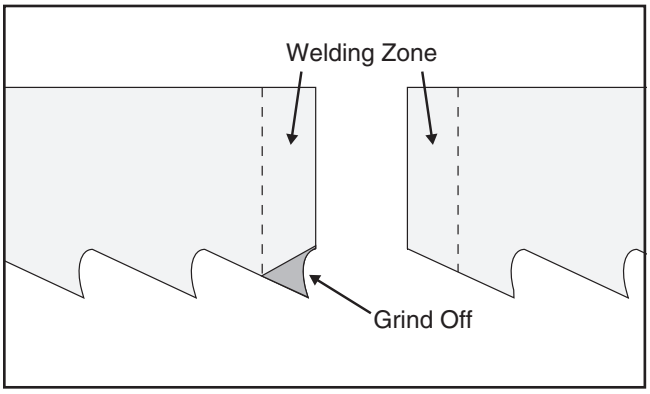

Figure 6. Blade ends and welding zone.

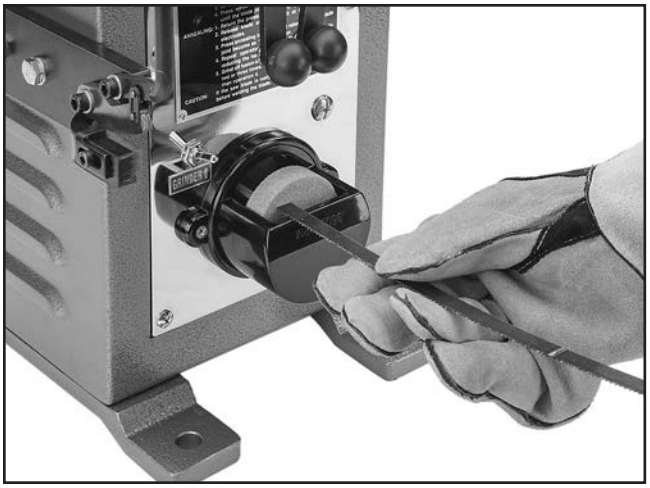

Figure 7. Using the grinder.

Note: *You can make sure that the blade ends are even with each other by stacking them together with the teeth facing in opposite directions (see **Figure 8**), then grinding them. Regardless of the grinding angle, the blade ends will match evenly for welding.*

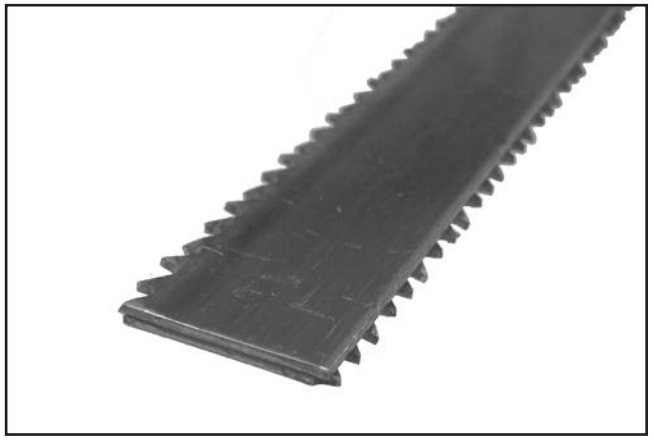

Figure 8. Blade ends stacked with teeth facing opposite directions.

2. Use 120-grit emery cloth or an equivalent to lightly sand the part of the blade that will contact the welding clamps. This helps ensure a good electrical contact with the blade for welding.

   Note: *To prevent dulling the teeth, keep the emery cloth away from them when sanding the blade surface.*

Welding

1. DISCONNECT WELDER FROM POWER!

2. Thoroughly clean the welding clamps to remove debris, oily substances, or flash from previous welding operations. If necessary, lightly sand clamps with 120-grit emery cloth.

3. Fully rotate the clamping pressure dial (see **Figure 9**) clockwise. This spreads the welding clamps apart to allow proper positioning of the blade ends.

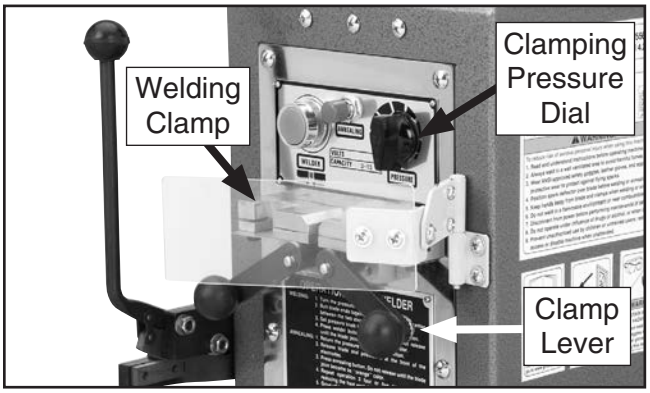

Figure 9. Clamping controls.

4. Loosen the welding clamps by pulling the clamp levers down.

5. Position the back of one blade end evenly against the back of the right welding clamp so the end is midway between the two clamps, then rotate the clamp lever as far up as possible to hold the blade end in place (see **Figure 10**).

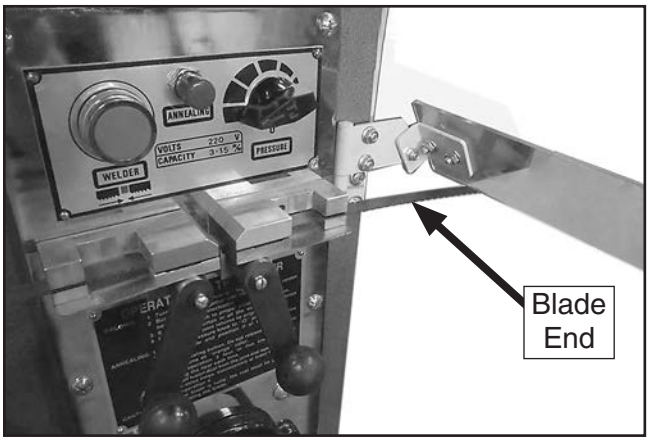

Figure 10. Blade end properly positioned in welding clamp and locked in place.

6. Use the illustration in **Figure 11** to set the correct clamping pressure setting for the width of the blade.

Note: *The clamping pressure presses the blade ends together to help form a strong weld. The pressure scale is an approximation only. If you have difficulty getting satisfactory welds, experiment by increasing or decreasing this pressure.*

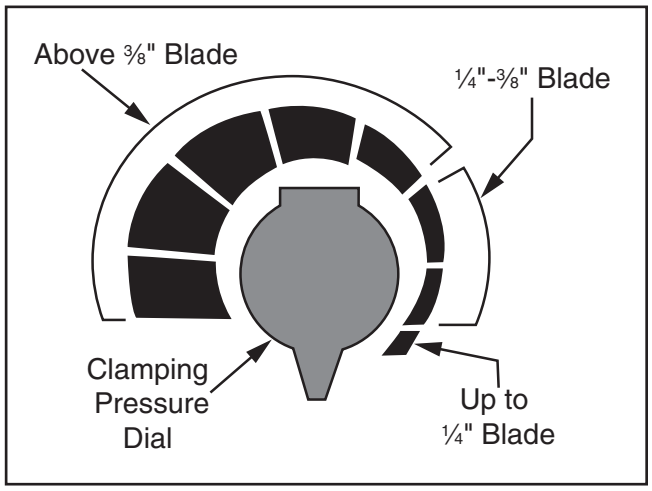

Figure 11. Blade clamping pressure settings.

7. Place the other blade end in the left welding clamp. Position it so that it evenly butts up against the opposing blade end, then clamp it in place by rotating the left clamp lever up (see **Figure 12**).

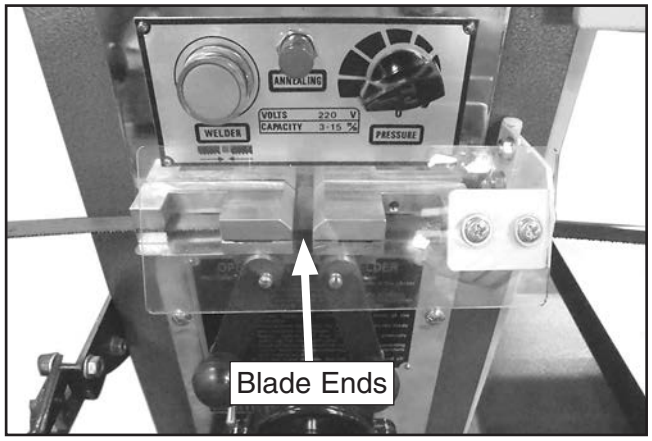

Figure 12. Blade ends in correct position for welding.

Note: *To ensure a good blade weld, it is critical that the blade ends are secured in the welding clamps evenly and with no overlap (see **Figure 13**).*

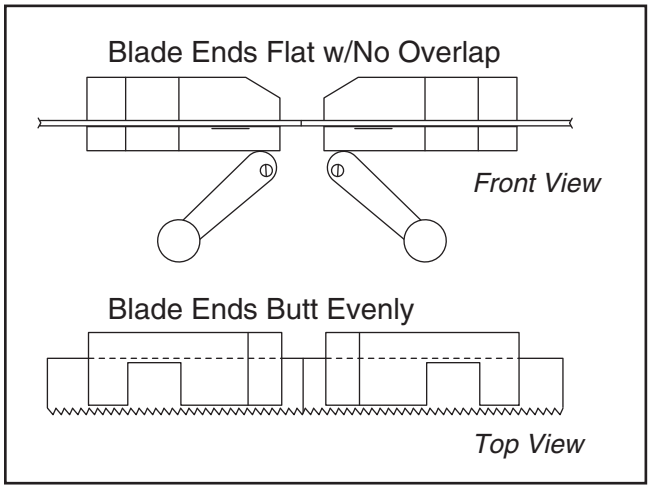

Figure 13. Blade ends correctly secured in welding clamps.

8. Put on safety goggles and heavy leather gloves.

9. Connect the welder to power.

⚠WARNING

Light generated during the welding process could cause serious eye injury. To reduce your risk, always wear eye protection approved for welding during this process.

⚠CAUTION

Burning sparks may be thrown in all directions while welding. Protect yourself from injury by not welding near flammables and wearing spark-resistant clothing/gloves. Keep fire extinguishing equipment readily available.

NOTICE

For good metal-to-metal contact between welding clamps and blade, make sure blades and clamps are free from any debris, coatings, or flash before and after each use of the welding station.

NOTICE

Before welding a blade back together to perform an internal cut, insulate entire blade from all metal surfaces of the bandsaw to ensure a good flow of current through the blade.

10. Press welder button until the blade joint returns to the original color. **IMPORTANT:** Releasing the welder button immediately may cause weld failure.

Note: *A limit switch senses the electrical resistance between the blade ends. If there is an adequate amount of welded material, the limit switch will not allow the welder button to activate the operation again.*

11. Allow the blade to cool.

12. Rotate the clamping pressure dial fully clockwise to release the clamp pressure.

13. Remove the blade.

14. Inspect the weld. The welded joint should be even across the width of the blade with no gaps (see **Figure 14**).

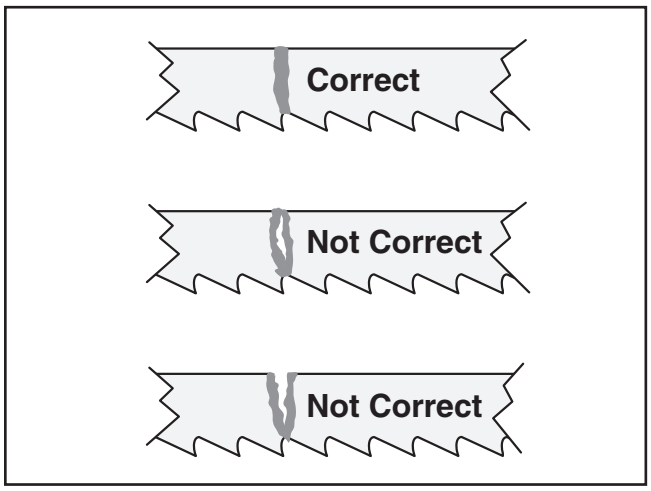

Figure 14. Blade welding joint examples.

—If the weld is satisfactory, anneal the weld as instructed in the next subsection.

—If the weld is NOT satisfactory, use the blade shear to completely remove the weld and repeat the **Blade Preparation** and **Welding** procedures beginning on **Page 6**.

Annealing Weld

Once the blade ends are welded, the metal becomes hard and brittle, which is not suitable for a bandsaw blade that must continuously bend smoothly under stress.

To bring the weld strength and flexibility to acceptable levels for a bandsaw blade, it must be annealed. The annealing process re-heats the weld area, then allows it to cool gradually, improving its strength enough to meet the flexibility requirements for the blade.

To anneal the weld:

1. Place the blade in the welding clamps so that the weld is centered between the clamps.

2. Secure the blade by moving clamp levers up.

3. **T27556 Only:** Set the "Anneal Strength" switch (see **Figure 15**) to the proper position for the width of the blade. Use WEAK for 1/8"–3/8" (3–10mm) wide blades and STRONG for 7/16"–3/4" (11–19mm) wide blades.

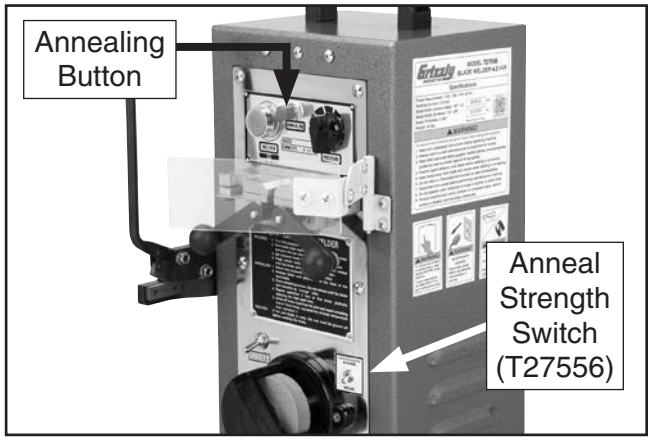

Figure 15. Annealing controls.

4. **For Carbon Steel Blades:** Rapidly press and release the annealing button repeatedly (see **Figure 15**) until the weld zone turns a dull red color. (DO NOT press and hold the annealing button.) Continue pressing the annealing button with decreasing frequency until the weld no longer glows.

   For Bi-Metal Blades: Rapidly press and release the annealing button repeatedly until the weld zone starts to glow, then immediately stop pressing the annealing button completely.

5. Allow the blade to completely cool.

6. Remove the blade from the welding clamps.

7. Grind the weld flat on both sides so the blade will run smoothly on the bandsaw wheels.

   Note: *Make sure not to grind the teeth or blade body. Be careful to avoid overheating the blade while grinding—this will weaken the blade.*

8. **For Bi-Metal Blades Only:** Repeat **Steps 4–5** (not **Step 6**).

9. Test the strength and flexibility of the weld by bending the blade in an arc (with the weld at the top of the arc) similar in size and shape of the bandsaw wheels. The blade should bend smoothly without any angles (see **Figure 16**).

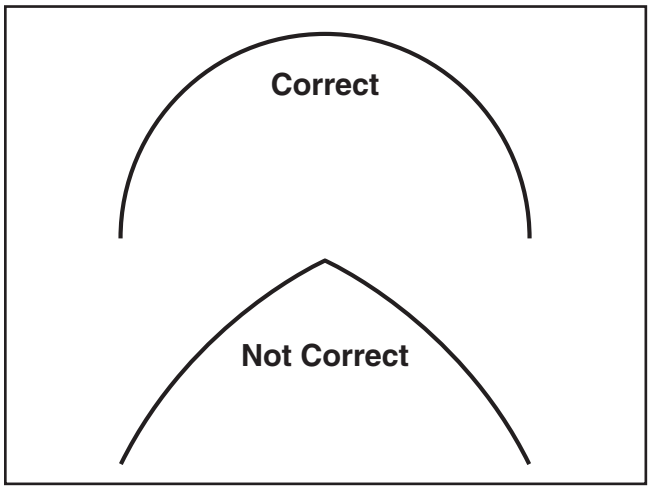

Figure 16. Comparison of correct and incorrect blade weld bends.

   —If the blade does show signs of bending or breaking at the weld, use the blade shear to completely remove the weld and perform the **Blade Preparation** and **Welding** procedures again that begin on **Page 6**.

10. DISCONNECT WELDER FROM POWER!

11. Thoroughly clean the welding clamps to remove debris, oily substances, or flash from previous welding operations. If necessary, lightly sand them with 120-grit emery cloth.

Troubleshooting

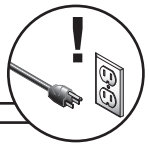

Review the troubleshooting and procedures in this section if a problem develops with your machine. If you need replacement parts or additional help with a procedure, call our Technical Support. **Note:** *Please gather the serial number and manufacture date of your machine before calling.*

Symptom	Possible Cause	Possible Solution
Machine does not start or a breaker trips.	1. Plug/receptacle is at fault or wired incorrectly.	1. Test for good contacts; correct the wiring.
	2. Wall fuse/circuit breaker is blown/tripped.	2. Ensure circuit size is suitable for this machine; replace weak breaker.
	3. Wiring is open/has high resistance.	3. Check for broken wires or disconnected/corroded connections, and repair/replace as necessary.
	4. Welder button is at fault.	4. Replace welder button.
Weld is misaligned.	1. Debris or flash on weld clamps or blade.	1. Remove debris, oily substances, or flash from weld clamps and blade.
	2. Blade ends not cut off square.	2. Use the blade shear to cut blades; grind ends together (see **Note** on top of **Page 7**).
	3. Blade ends not evenly butted in clamps.	3. Make sure blade ends are evenly butted against each other before securing with clamp levers (**Page 8**).
	4. Clamping pressure not set correctly.	4. Set clamping pressure correctly (**Page 8**).
Weld not complete (has blow-holes)	1. Blade ends not clamped properly.	1. Make sure blade ends are evenly butted against each other in clamps; use the correct clamping pressure (**Page 8**).
	2. Blade ends not even with each other.	2. Use the blade shear to cut blades; grind ends together (see **Note** at top of **Page 7**).
Weld breaks or is brittle.	1. Weld not correctly annealed.	1. Correctly perform the annealing procedure on **Page 9**.
	2. Weld is ground too thin.	2. Only grind flash even with blade body.
	3. Debris or oil in weld.	3. Make sure clamps and blade ends are clean of debris, oily substances, and flash.
	4. Blade overheated during grinding.	4. Use light passes with the grinding wheel.

T27555 Wiring Diagram

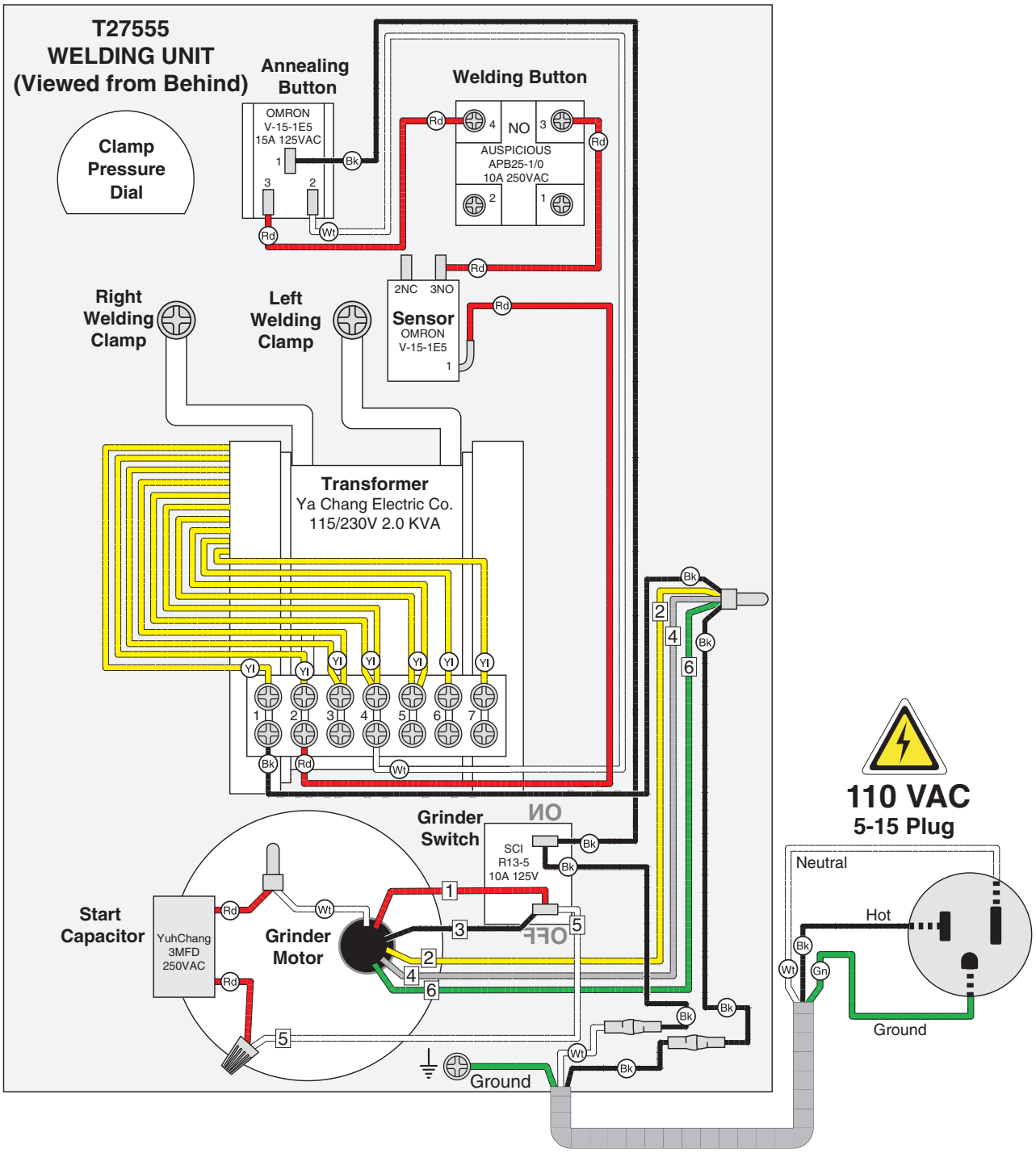

NOTICE

The photos and diagrams included in this section are best viewed in color. You can view these pages in color at www.grizzly.com.

COLOR KEY

WHITE	Wt	BLACK	Bk
GREEN	Gn	YELLOW	Yl
RED	Rd	GRAY	Gy

T27556 Wiring Diagram

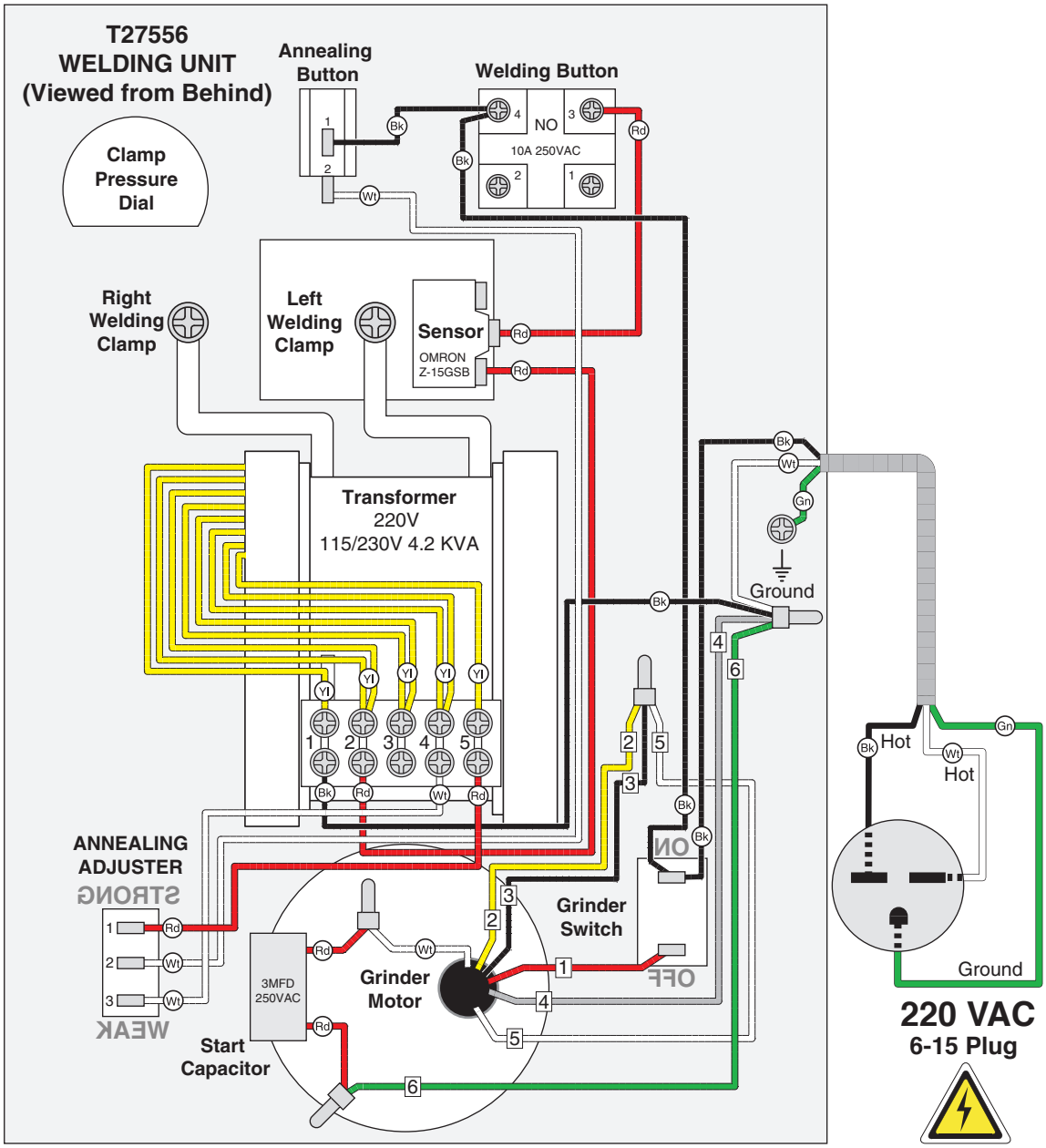

NOTICE

The photos and diagrams included in this section are best viewed in color. You can view these pages in color at www.grizzly.com.

COLOR KEY

WHITE	Wt	BLACK	Bk
GREEN	Gn	YELLOW	Yl
RED	Rd	GRAY	Gy

T27575 Wiring Diagram

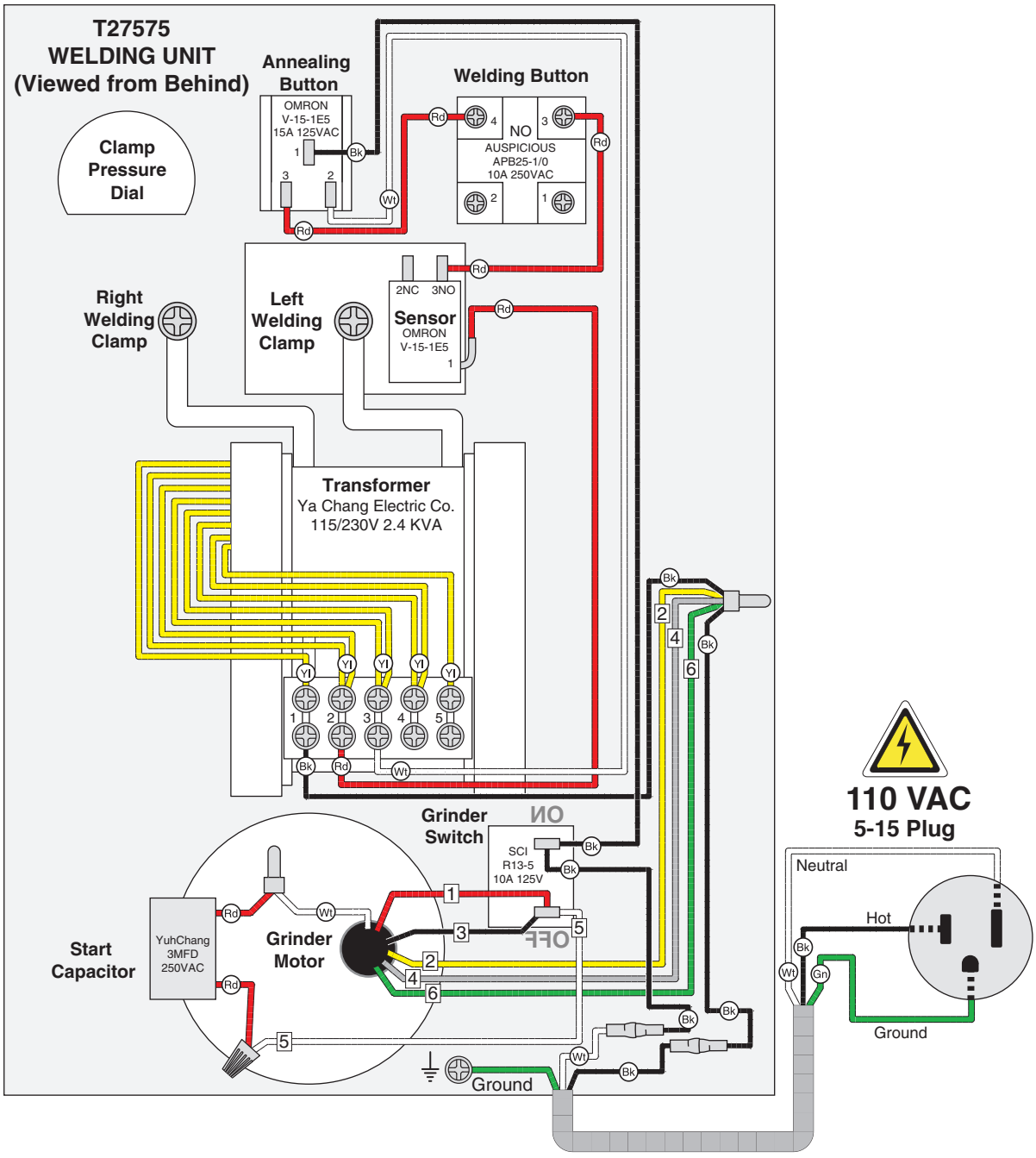

NOTICE

The photos and diagrams included in this section are best viewed in color. You can view these pages in color at www.grizzly.com.

COLOR KEY

WHITE	Wt	BLACK	Bk
GREEN	Gn	YELLOW	Yl
RED	Rd	GRAY	Gy

Blade Shear & Cabinet

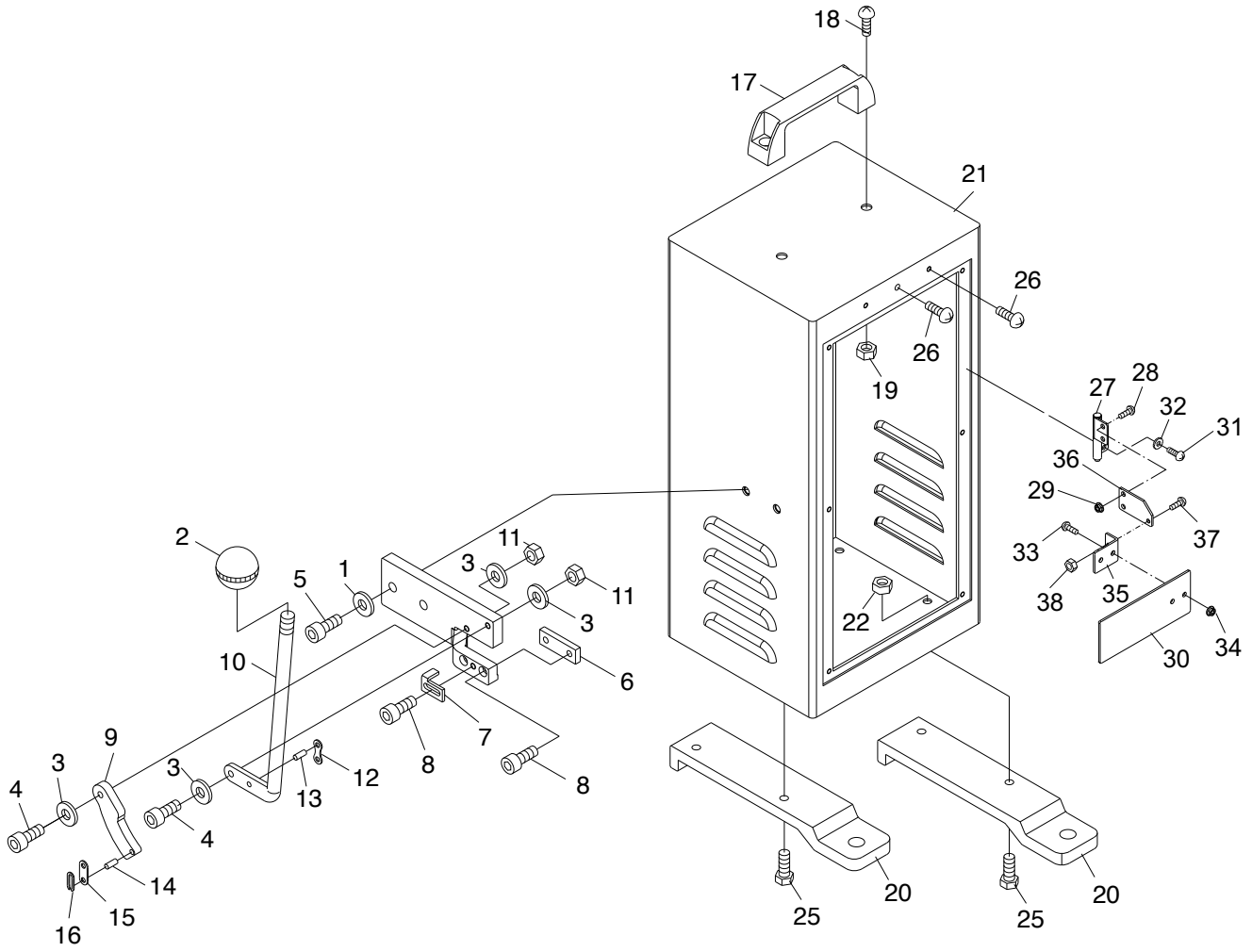

REF	PART #	DESCRIPTION
1	PT27555001	FLAT WASHER 8MM
2	PT27555002	BALL KNOB 5/16-18 (BLACK)
3	PT27555003	FLAT WASHER 6MM
4	PT27555004	CAP SCREW M6-1 X 25
5	PT27555005	CAP SCREW M8-1.25 X 20
6	PT27555006	LOWER SHEAR BLADE
7	PT27555007	ALIGNMENT BRACKET
8	PT27555008	CAP SCREW M5-.8 X 8
9	PT27555009	UPPER SHEAR BLADE
10	PT27555010	SHEARING LEVER 5/16-18
11	PT27555011	HEX NUT M6-1
12	PT27555012	LOCKING LINK 8.25 X 21MM
13	PT27555013	LOCKING LINK PIN 3.5 X 10.5MM
14	PT27555014	LOCKING LINK PIN 3.5 X 10.5MM
15	PT27555015	LOCKING LINK 8.5 X 21MM
16	PT27555016	LOCKING LINK CLIP
17	PT27555017	HANDLE
18	PT27555018	PHLP HD SCR M8-1.25 X 16
19	PT27555019	HEX NUT M8-1.25

REF	PART #	DESCRIPTION
20	PT27555020	CABINET FEET W/MOUNTING HOLES
21	PT27555021	CABINET (T27555, T27575)
21	PT27556021	CABINET (T27556)
22	PT27555022	HEX NUT M6-1
25	PT27555025	HEX BOLT M6-1 X 25
26	PT27555026	PHLP HD SCR M5-.8 X 8
27	PT27555027	SPARK DEFLECTOR HINGE
28	PT27555028	PHLP HD SCR M5-.8 X 8
29	PT27555029	HEX NUT M5-.8
30	PT27555030	SPARK DEFLECTOR
31	PT27555031	PHLP HD SCR M5-.8 X 12
32	PT27555032	FLAT WASHER 5MM
33	PT27555033	PHLP HD SCR M5-.8 X 12
34	PT27555034	HEX NUT M5-.8
35	PT27555035	SPARK DEFLECTOR BRACKET (LEFT)
36	PT27555036	SPARK DEFLECTOR BRACKET (RIGHT)
37	PT27555037	PHLP HD SCR M5-.8 X 12
38	PT27555038	HEX NUT M5-.8
39	PT27555039	PHLP HD SCR M5-.8 X 8

T27555/T27575 Controls & Electrical

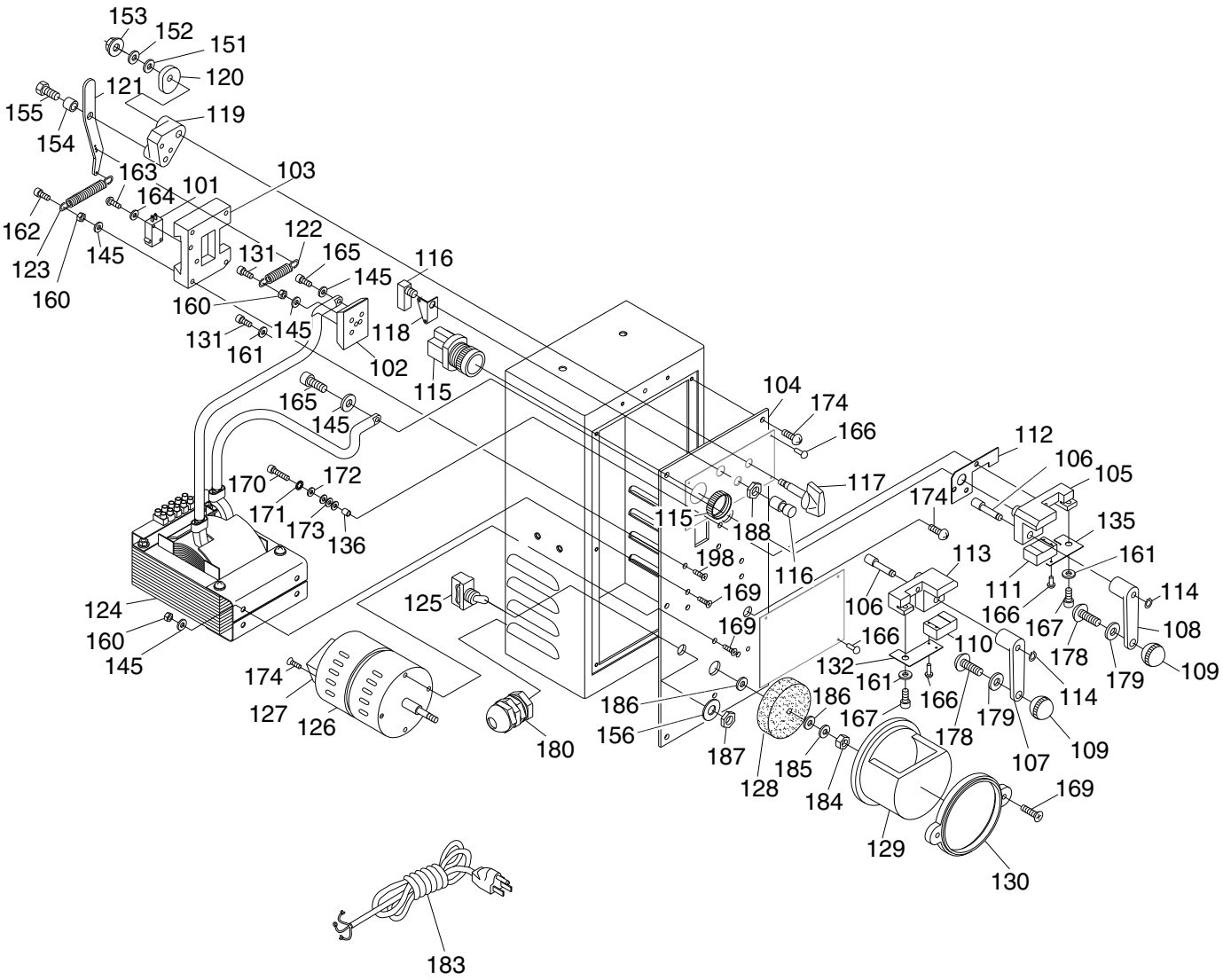

T27555/T27575 Controls & Electrical Parts

REF	PART #	DESCRIPTION
101	PT27555101	SENSOR OMRON V-151E5 110V/220V
102	PT27555102	GUIDE BLOCK
103	PT27555103	GUIDE CASTING
104	PT27555104	FRONT PANEL
105	PT27555105	ELECTRODE (RIGHT)
106	PT27555106	CAM PIVOT SHAFT
107	PT27555107	CLAMP LEVER (LEFT)
108	PT27555108	CLAMP LEVER (RIGHT)
109	PT27555109	BALL KNOB M8-1.25 (BLACK)
110	PT27555110	LOWER JAW (LEFT)
111	PT27555111	LOWER JAW (RIGHT)
112	PT27555112	JAW INSULATOR
113	PT27555113	ELECTRODE (LEFT)
114	PT27555114	EXT RETAINING RING 5MM
115	PT27555115	ON BUTTON AUSPICIOUS APB 25-1/0
116	PT27555116	ANNEAL BUTTON OMRON V15-1E5
117	PT27555117	CLAMPING PRESSURE KNOB M6-1
118	PT27555118	ANNEAL SWITCH BRACKET
119	PT27555119	SPRING ARM BRACKET
120	PT27555120	CAM
121	PT27555121	SPRING ARM
122	PT27555122	UPPER EXTENSION SPRING 1 X 9 X 20
123	PT27555123	LOWER EXTENSION SPRING 1 X 10 X 40
124	PT27555124	WELDING TRANSFORMER 110V 2.0 KVA (T27555)
124	PT27575124	WELDING TRANSFORMER 110V 2.4 KVA (T27575)
125	PT27555125	TOGGLE SWITCH SEI R13-5
126	PT27555126	MOTOR 1/8HP 110V 1-PH
127	PT27555127	S CAPACITOR 3M 250V 1/2 X 7/8 X 1-1/4
128	PT27555128	GRINDING WHEEL 1/4 X 5/8 X 2-1/2
129	PT27555129	GRINDING WHEEL GUARD
130	PT27555130	GUARD RETAINING RING
131	PT27555131	CAP SCREW M5-.8 X 25
132	PT27555132	CONNECTING PLATE (LEFT)

REF	PART #	DESCRIPTION
135	PT27555135	CONNECTING PLATE (RIGHT)
136	PT27555136	INSULATING SLEEVE
145	PT27555145	FLAT WASHER 5MM
151	PT27555151	FLAT WASHER 6MM
152	PT27555152	LOCK WASHER 6MM
153	PT27555153	FLANGE NUT M6-1
154	PT27555154	SPACER
155	PT27555155	HEX BOLT M6-1 X 16
156	PT27555156	LOCK WASHER #8
160	PT27555160	HEX NUT M5-.8
161	PT27555161	LOCK WASHER 5MM
162	PT27555162	CAP SCREW M5-.8 X 25
163	PT27555163	PHLP HD SCR 5-40 X 3/4
164	PT27555164	LOCK WASHER #5
165	PT27555165	CAP SCREW M5-.8 X 8
166	PT27555166	RIVET 2 X 6MM NAMEPLATE, STEEL
167	PT27555167	CAP SCREW M5-.8 X 6
169	PT27555169	FLAT HD SCR M5-.8 X 12
170	PT27555170	CAP SCREW M5-.8 X 16
171	PT27555171	INT TOOTH WASHER 5MM
172	PT27555172	FLAT WASHER 5MM
173	PT27555173	INSULATING WASHER 5MM
174	PT27555174	PHLP HD SCR M5-.8 X 10
178	PT27555178	LOCKING FLANGE SCREW M8-1.25 X 16
179	PT27555179	LOCK WASHER 8MM
180	PT27555180	STRAIN RELIEF TYPE-3 M16-1.5
183	PT27555183	PWR CORD 16G 3W 90" 5-15
184	PT27555184	HEX NUT 1/4-20
185	PT27555185	FLAT WASHER 1/4
186	PT27555186	FLAT WASHER 1/4
187	PT27555187	HEX NUT 8-32 THIN
188	PT27555188	HEX NUT M12-1.0 THIN
198	PT27555198	FLAT HD SCR M5-.8 X 15

We do our best to stock replacement parts when possible, but we cannot guarantee that all parts shown are available for purchase. Call **(800) 523-4777** or visit **www.grizzly.com/parts** to check for availability.

T27556 Controls & Electrical

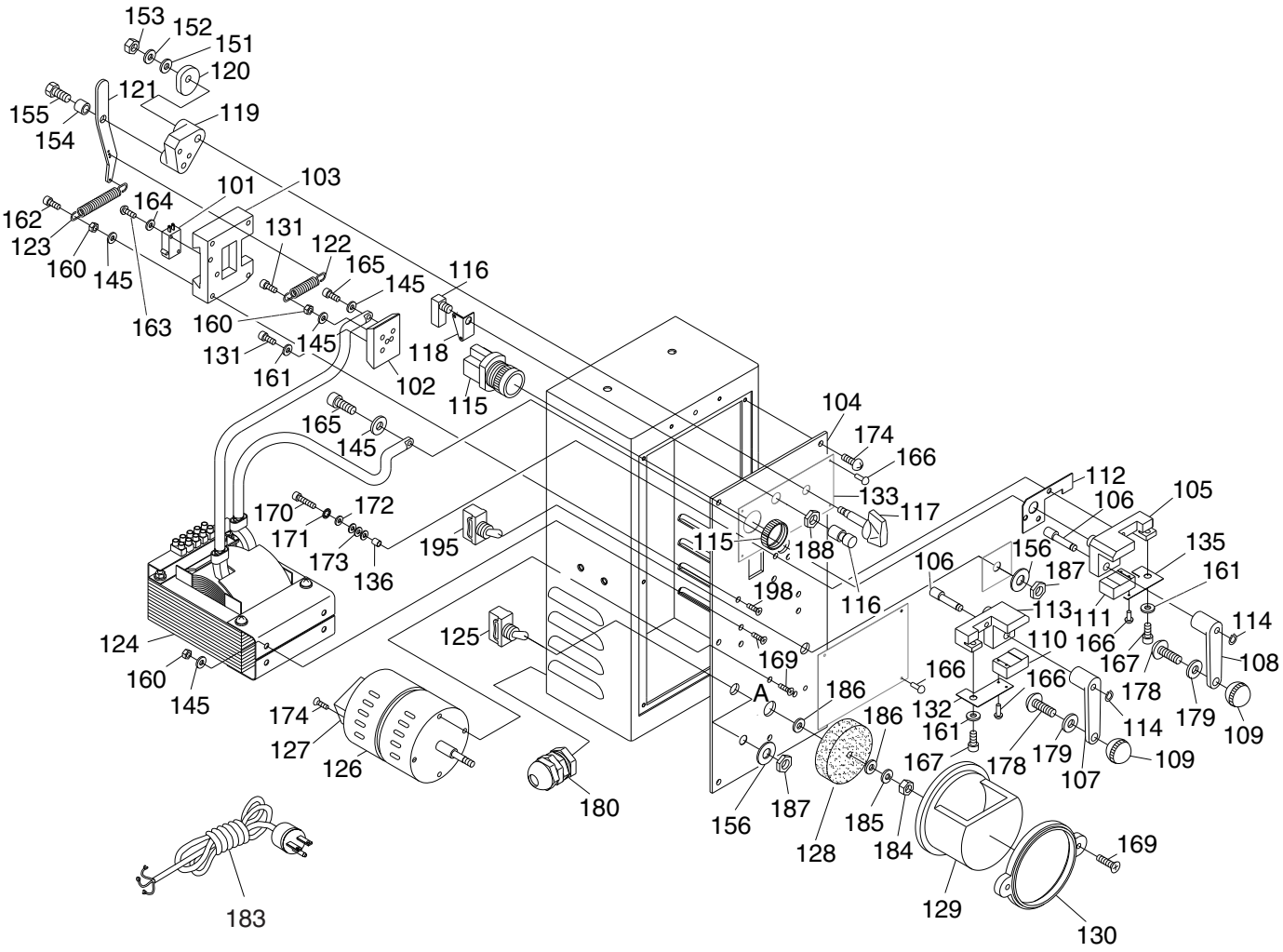

T27556 Controls & Electrical Parts

REF	PART #	DESCRIPTION
101	PT27556101	SENSOR OMRON Z-15GSB
102	PT27556102	GUIDE BLOCK
103	PT27556103	GUIDE CASTING
104	PT27556104	FRONT PANEL
105	PT27556105	ELECTRODE (RIGHT)
106	PT27556106	CAM PIVOT SHAFT
107	PT27556107	CLAMP LEVER (LEFT)
108	PT27556108	CLAMP LEVER (RIGHT)
109	PT27556109	BALL KNOB M8-1.25 (BLACK)
110	PT27556110	LOWER JAW (LEFT)
111	PT27556111	LOWER JAW (RIGHT)
112	PT27556112	JAW INSULATOR
113	PT27556113	ELECTRODE (LEFT)
114	PT27556114	EXT RETAINING RING 5MM
115	PT27556115	ON BUTTON AUSPICIOUS APB 25-1/0
116	PT27556116	ANNEAL BUTTON OMRON V15-1E5
117	PT27556117	CLAMPING PRESSURE KNOB M6-1
118	PT27556118	ANNEAL SWITCH BRACKET
119	PT27556119	SPRING ARM BRACKET
120	PT27556120	CAM
121	PT27556121	SPRING ARM
122	PT27556122	UPPER EXTENSION SPRING 1 X 9 X 20
123	PT27556123	LOWER EXTENSION SPRING 1 X 10 X 40
124	PT27556124	WELDING TRANSFORMER 220V 4.2 KVA
125	PT27556125	TOGGLE SWITCH SEI R13-5
126	PT27556126	MOTOR 1/8 HP 110V 1-PH
127	PT27556127	S CAPACITOR 3M 250V 1/2 X 7/8 X 1-1/4
128	PT27556128	GRINDING WHEEL 1/4 X 5/8 X 2-1/2
129	PT27556129	GRINDING WHEEL GUARD
130	PT27556130	GUARD RETAINING RING
131	PT27556131	CAP SCREW M5-.8 X 25
132	PT27556132	CONNECTING PLATE (LEFT)
135	PT27556135	CONNECTING PLATE (RIGHT)

REF	PART #	DESCRIPTION
136	PT27556136	INSULATING SLEEVE
145	PT27556145	FLAT WASHER 5MM
151	PT27556151	FLAT WASHER 6MM
152	PT27556152	LOCK WASHER 6MM
153	PT27556153	FLANGE NUT M6-1
154	PT27556154	SPACER
155	PT27556155	HEX BOLT M6-1 X 16
156	PT27556156	LOCK WASHER #8
160	PT27556160	HEX NUT M5-.8
161	PT27556161	LOCK WASHER 5MM
162	PT27556162	CAP SCREW M5-.8 X 25
163	PT27556163	PHLP HD SCR 5-40 X 3/4
164	PT27556164	LOCK WASHER #5
165	PT27556165	CAP SCREW M5-.8 X 8
166	PT27556166	RIVET 2 X 6MM NAMEPLATE, STEEL
167	PT27556167	CAP SCREW M5-.8 X 6
169	PT27556169	FLAT HD SCR M5-.8 X 12
170	PT27556170	CAP SCREW M5-.8 X 16
171	PT27556171	INT TOOTH WASHER 5MM
172	PT27556172	FLAT WASHER 5MM
173	PT27556173	INSULATING WASHER 5MM
174	PT27556174	PHLP HD SCR M5-.8 X 10
178	PT27556178	LOCKING FLANGE SCREW M8-1.25 X 16
179	PT27556179	LOCK WASHER 8MM
180	PT27556180	STRAIN RELIEF TYPE-3 M16-1.5
183	PT27556183	POWER CORD 16G 3W 90" 6-15
184	PT27556184	HEX NUT 1/4-20
185	PT27556185	FLAT WASHER 1/4
186	PT27556186	FLAT WASHER 1/4
187	PT27556187	HEX NUT 8-32 THIN
188	PT27556188	HEX NUT M12-1.0 THIN
195	PT27556195	TOGGLE SWITCH
198	PT27556198	FLAT HD SCR M5-.8 X 15

Labels & Cosmetics

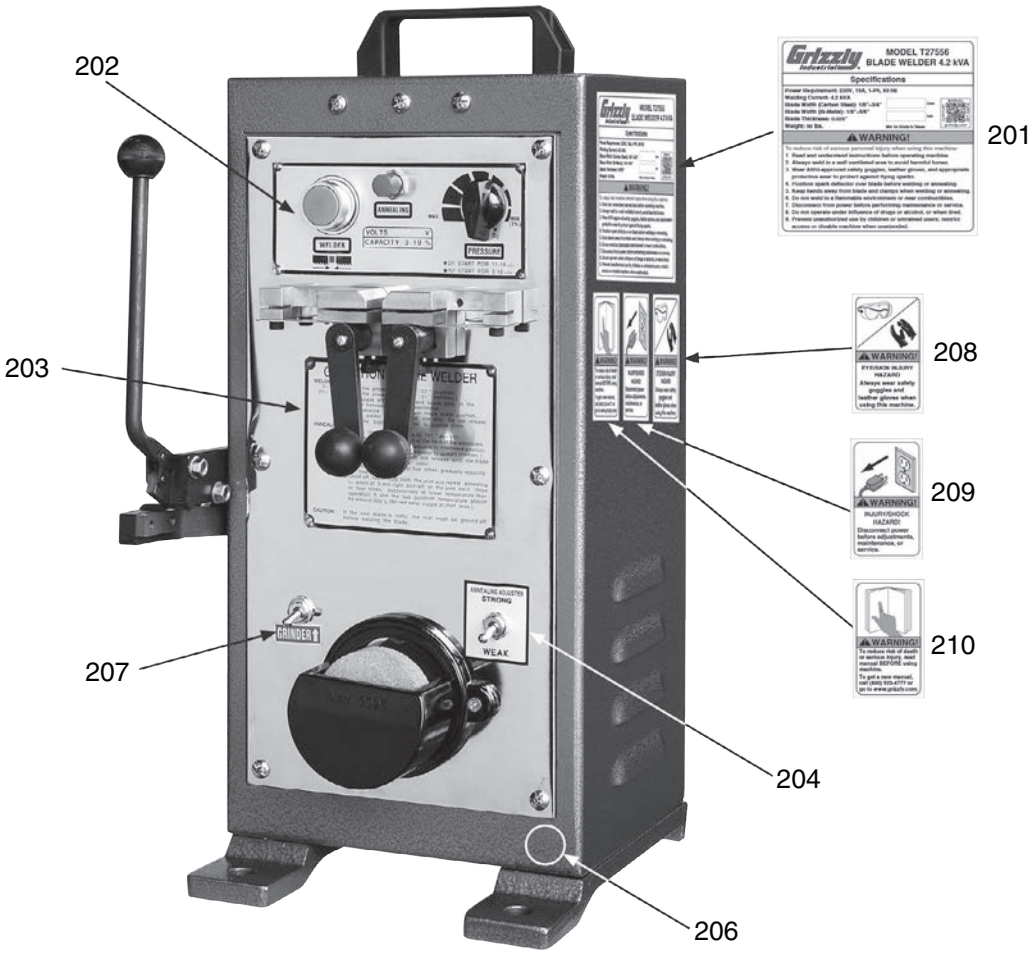

Model T27556 Shown

REF	PART #	DESCRIPTION
201	PT27555201	MACHINE ID LABEL (T27555)
201	PT27556201	MACHINE ID LABEL (T27556)
201	PT27575201	MACHINE ID LABEL (T27575)
202	PT27555202	CONTROL PANEL LABEL (T27555, T27575)
202	PT27556202	CONTROL PANEL LABEL (T27556)
203	PT27555203	WELD INSTRUCTION LABEL (T27555, T27575)
203	PT27556203	WELD INSTRUCTIONS LABEL (T27556)

REF	PART #	DESCRIPTION
204	PT27556204	ANNEALING ADJUSTER LABEL (T27556)
206	PT27555206	TOUCH-UP PAINT, GRIZZLY GREEN
207	PT27555207	GRINDER LABEL
208	PT27555208	GOGGLES/GLOVES LABEL
209	PT27555209	DISCONNECT POWER LABEL
210	PT27555210	READ MANUAL LABEL

⚠WARNING

Safety labels help reduce the risk of serious injury caused by machine hazards. If any label comes off or becomes unreadable, the owner of this machine MUST replace it in the original location before resuming operations. For replacements, contact (800) 523-4777 or www.grizzly.com.