T27429 & T27430 Breakdown

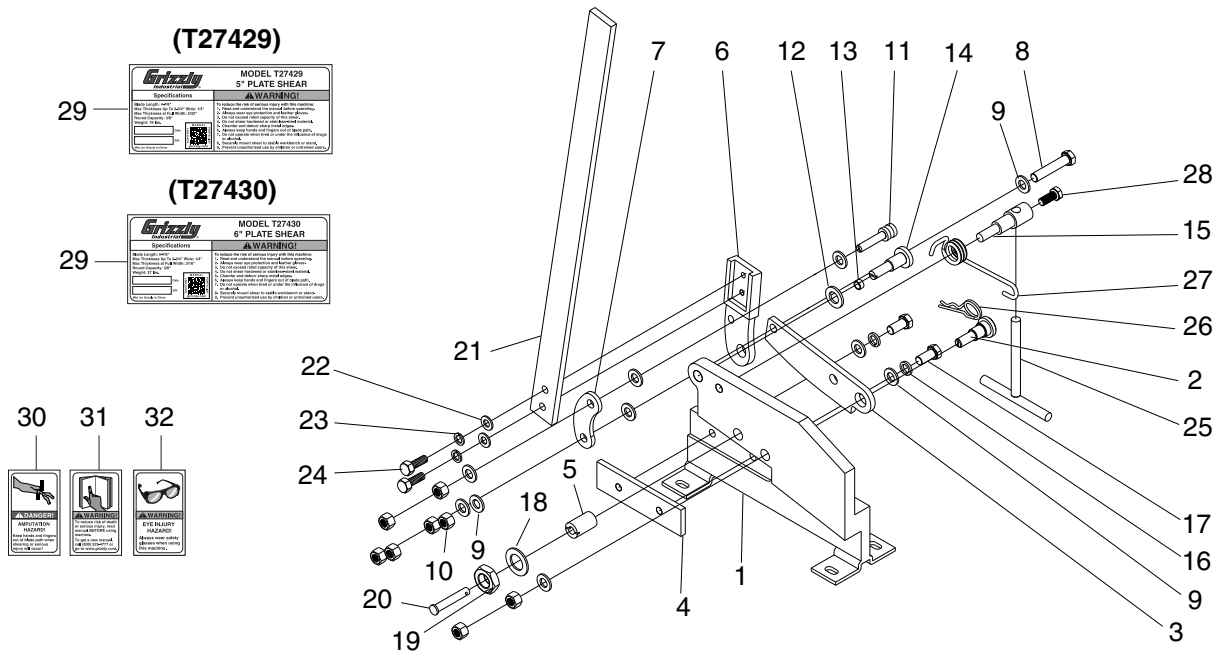

T27429 Parts List

REF	PART #	DESCRIPTION
1	PT27429001	SHEAR BODY
2	PT27429002	PIVOT BOLT M12-1.75 X 30
3	PT27429003	UPPER BLADE 5"
4	PT27429004	LOWER BLADE 5"
5	PT27429005	SHEARING PORT SCREW M22-1.5 X 30
6	PT27429006	HANDLE BRACKET
7	PT27429007	REAR PIVOT ARM
8	PT27429008	HEX BOLT M12-1.75 X 60 BLK C8.8
9	PT27429009	FLAT WASHER 12MM
10	PT27429010	HEX NUT M12-1.75
11	PT27429011	PIVOT BOLT W/SPRING CAPTURE M10-1.5 X 25
12	PT27429012	FLAT WASHER 16MM
13	PT27429013	BUSHING, COPPER
14	PT27429014	PIVOT BOLT M12-1.75 X 35
15	PT27429015	SPRING SUPPORT ROD
16	PT27429016	LOCK WASHER 12MM
17	PT27429017	HEX BOLT M12-1.75 X 25 BLK C8.8
18	PT27429018	FLAT WASHER 22MM
19	PT27429019	HEX NUT M22-1.5
20	PT27429020	CLEVIS PIN 10 X 60MM
21	PT27429021	HANDLE
22	PT27429022	FLAT WASHER 10MM
23	PT27429023	LOCK WASHER 10MM
24	PT27429024	HEX BOLT M10-1.5 X 25 BLK C8.8
25	PT27429025	WORK STOP
26	PT27429026	COTTER PIN 3 X 90, HAIRPIN
27	PT27429027	TORSION SPRING
28	PT27429028	HEX BOLT M10-1.5 X 20 BLK C8.8
29	PT27429029	MACHINE ID LABEL
30	PT27429030	AMPUTATION HAZARD LABEL
31	PT27429031	READ MANUAL LABEL
32	PT27429032	SAFETY GLASSES LABEL

T27430 Parts List

REF	PART #	DESCRIPTION
1	PT27430001	SHEAR BODY
2	PT27430002	PIVOT BOLT M12-1.75 X 30
3	PT27430003	UPPER BLADE 4-7/8"
4	PT27430004	LOWER BLADE 4-7/8"
5	PT27430005	SHEARING PORT SCREW M22-1.5 X 30
6	PT27430006	HANDLE BRACKET
7	PT27430007	REAR PIVOT ARM
8	PT27430008	HEX BOLT M12-1.75 X 60 BLK C8.8
9	PT27430009	FLAT WASHER 12MM
10	PT27430010	HEX NUT M12-1.75
11	PT27430011	PIVOT BOLT W/SPRING CAPTURE M10-1.5 X 25
12	PT27430012	FLAT WASHER 16MM
13	PT27430013	BUSHING, COPPER
14	PT27430014	PIVOT BOLT M12-1.75 X 35
15	PT27430015	SPRING SUPPORT ROD
16	PT27430016	LOCK WASHER 12MM
17	PT27430017	HEX BOLT M12-1.75 X 25 BLK C8.8
18	PT27430018	FLAT WASHER 22MM
19	PT27430019	HEX NUT M22-1.5
20	PT27430020	CLEVIS PIN 10 X 60MM
21	PT27430021	HANDLE
22	PT27430022	FLAT WASHER 10MM
23	PT27430023	LOCK WASHER 10MM
24	PT27430024	HEX BOLT M10-1.5 X 25 BLK C8.8
25	PT27430025	WORK STOP
26	PT27430026	COTTER PIN 3 X 90, HAIRPIN
27	PT27430027	TORSION SPRING
28	PT27430028	HEX BOLT M10-1.5 X 20 BLK C8.8
29	PT27430029	MACHINE ID LABEL
30	PT27430030	AMPUTATION HAZARD LABEL
31	PT27430031	READ MANUAL LABEL
32	PT27430032	SAFETY GLASSES LABEL

Please Note: *We do our best to stock replacement parts whenever possible, but we cannot guarantee that all parts shown here are available for purchase. Call* ***(800) 523-4777*** *or visit our online parts store at* ***www.grizzly.com*** *to check for availability.*