SECTION 8: PARTS

We do our best to stock replacement parts when possible, but we cannot guarantee that all parts shown are available for purchase. Call **(800) 523-4777** or visit **www.grizzly.com/parts** to check for availability.

Main

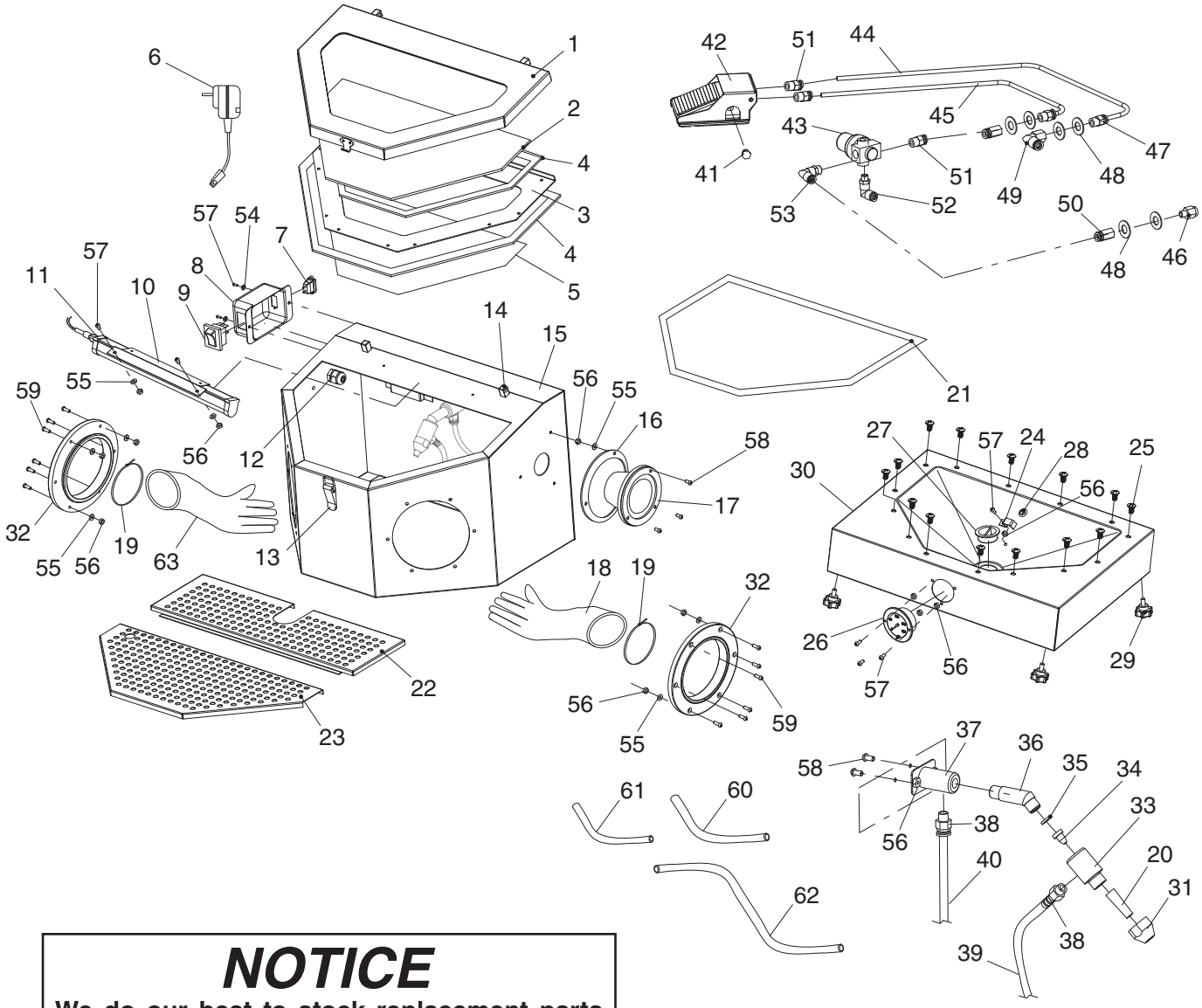

NOTICE

We do our best to stock replacement parts when possible, but we cannot guarantee that all parts shown are available for purchase. Call *(800) 523-4777* or visit *www.grizzly.com/parts* to check for availability.

Main Parts List

REF	PART #	DESCRIPTION
1	PT27359001	WINDOW FRAME
2	PT27359002	WINDOW GLASS
3	PT27359003	INNER HATCH PLATE
4	PT27359004	FOAM GASKET
5	PT27359005	CLEAR PROTECTIVE FILM 2-PC
6	PT27359006	POWER CORD 18G 2W 72" 1-15P
7	PT27359007	POWER CORD RECEIVER
8	PT27359008	SWITCH BOX
9	PT27359009	ON/OFF TOGGLE SWITCH KCD4 15A 250V
10	PT27359010	LED LIGHT BRACKET
11	PT27359011	LED LIGHT 12V DC
12	PT27359012	STRAIN RELIEF PG-9 TYPE-3
13	PT27359013	LATCH
14	PT27359014	TOP HATCH HINGE
15	PT27359015	CABINET
16	PT27359016	FILTER RING, METAL
17	PT27359017	FILTER ELEMENT
18	PT27359018	GLOVE (RIGHT)
19	PT27359019	PLASTIC ZIP TIE
20	PT27359020	BLAST NOZZLE 3.5MM ID
21	PT27359021	TOP HATCH SEAL
22	PT27359022	BOTTOM SCREEN (REAR)
23	PT27359023	BOTTOM SCREEN (FRONT)
24	PT27359024	AIR HOSE CLIP, METAL
25	PT27359025	PHLP HD SCR M6-1 X 12
26	PT27359026	AIR PRESSURE GAUGE
27	PT27359027	HOPPER PLUG, 30 X 12MM PLASTIC
28	PT27359028	AIR LINE INLET
29	PT27359029	FOOT PAD M6-1 X 12
30	PT27359030	HOPPER
31	PT27359031	BLAST NOZZLE M16-1.5 BRASS
32	PT27359032	GLOVE SEAT

REF	PART #	DESCRIPTION
33	PT27359033	NOZZLE BODY
34	PT27359034	AIR JET (BRASS)
35	PT27359035	RUBBER GASKET
36	PT27359036	NOZZLE EXTENSION (BRASS)
37	PT27359037	NOZZLE SEAT
38	PT27359038	COMPRESSION FITTING 16MM (BRASS)
39	PT27359039	ABRASIVE HOSE 16 OD X 300MM L
40	PT27359040	FLEXIBLE HOSE 8 OD X 350MM L
41	PT27359041	THREADED MUFFLER 3/8-27 X 44
42	PT27359042	FOOT PEDAL STNC TG23-J-08
43	PT27359043	PRESSURE REGULATOR XXPC AR-2000
44	PT27359044	FLEXIBLE HOSE 8 OD X 1400MM L (RED)
45	PT27359045	FLEXIBLE HOSE 8 OD X 1400MM L (BLUE)
46	PT27359046	AIR FITTING 1/8" NPT STRAIGHT
47	PT27359047	AIR FITTING 1/8" NPT STRAIGHT
48	PT27359048	FLAT WASHER 3/8
49	PT27359049	AIR FITTING 1/8" NPT 90-DEG
50	PT27359050	AIR FITTING 1/8" NPT STRAIGHT
51	PT27359051	AIR FITTING 1/4" NPT STRAIGHT
52	PT27359052	AIR FITTING 1/8" NPT 90-DEG
53	PT27359053	AIR FITTING 1/4" NPT 90-DEG
54	PT27359054	LOCK WASHER 4MM
55	PT27359055	FLAT WASHER 4MM
56	PT27359056	HEX NUT M4-.7
57	PT27359057	PHLP HD SCR M4-.7 X 8
58	PT27359058	PHLP HD SCR M4-.7 X 16
59	PT27359059	PHLP HD SCR M4-.7 X 12
60	PT27359060	FLEXIBLE HOSE 8 OD X 200MM L (BLUE)
61	PT27359061	FLEXIBLE HOSE 8 OD X 140MM L (RED)
62	PT27359062	FLEXIBLE HOSE 8 OD X 600MM L (RED)
63	PT27359063	GLOVE (LEFT)

Labels & Cosmetics

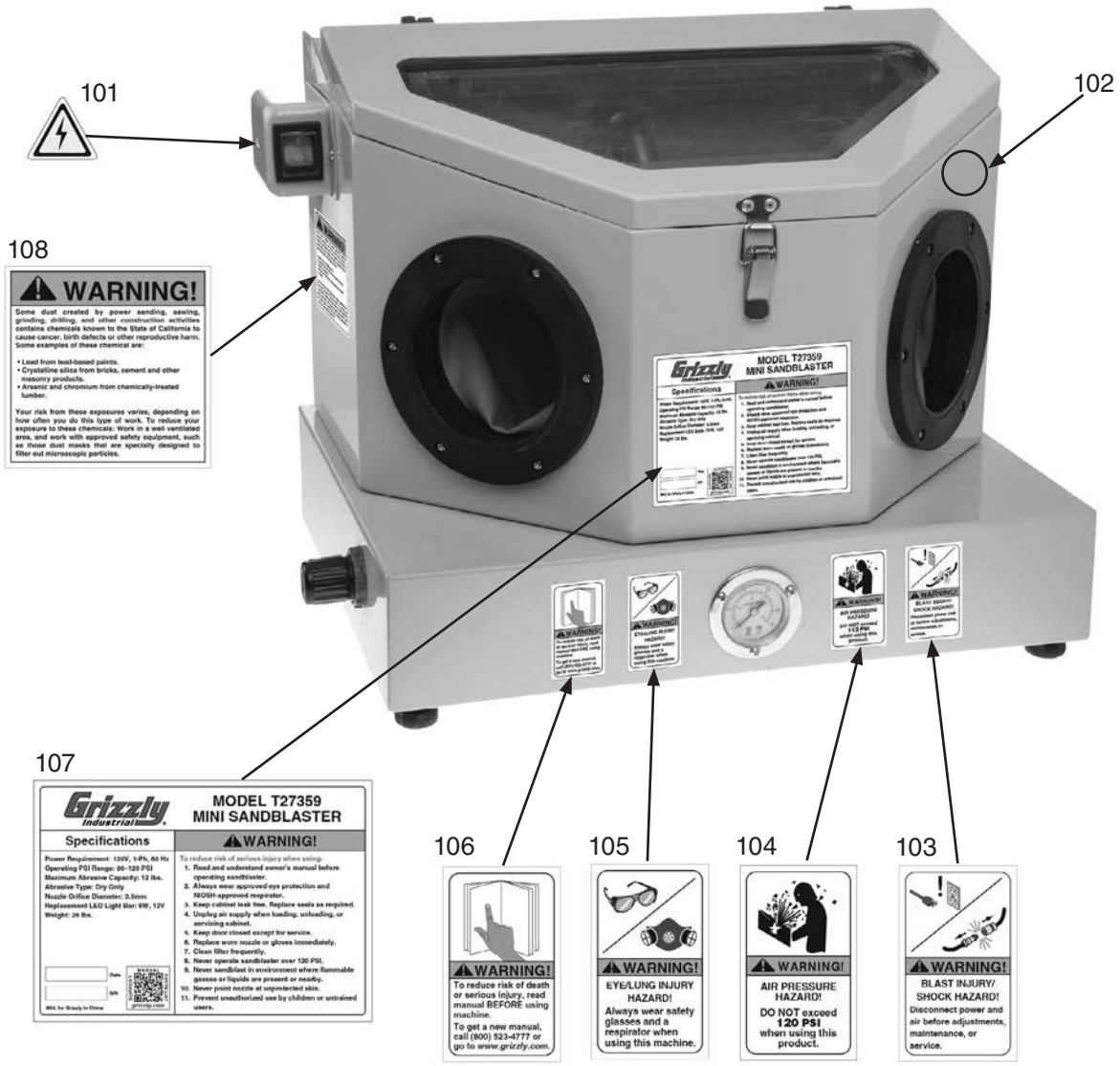

REF	PART #	DESCRIPTION
101	PT27359101	ELECTRICITY LABEL
102	PT27359102	TOUCH-UP PAINT, GRIZZLY BEIGE
103	PT27359103	BLAST INJURY LABEL
104	PT27359104	PSI LABEL 120 MAX

REF	PART #	DESCRIPTION
105	PT27359105	GLASSES/RESPIRATOR LABEL
106	PT27359106	READ MANUAL LABEL
107	PT27359107	MACHINE ID LABEL
108	PT27359108	SANDBLAST HAZARDS LABEL

⚠WARNING

Safety labels help reduce the risk of serious injury caused by machine hazards. If any label comes off or becomes unreadable, the owner of this machine MUST replace it in the original location before resuming operations. For replacements, contact (800) 523-4777 or www.grizzly.com.