Parts

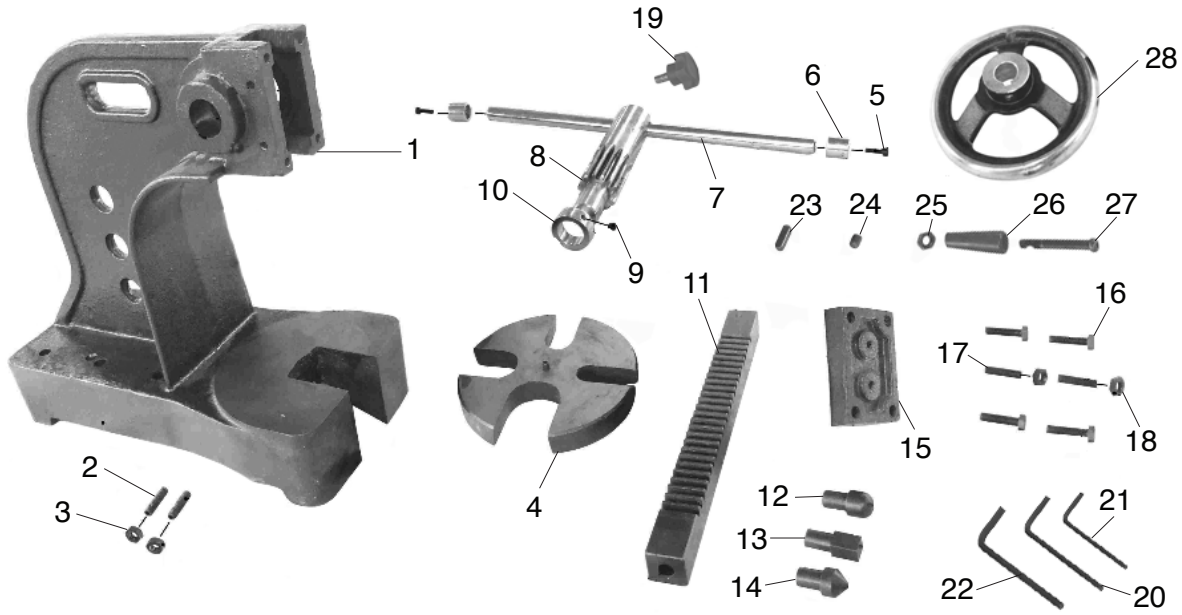

T26413 Parts List

REF	PART #	DESCRIPTION
1	PT26413001	BODY
2	PT26413002	SET SCREW M6-1 X 25
3	PT26413003	HEX NUT M6-1
4	PT26413004	TABLE
5	PT26413005	CAP SCREW M5-.8 X 12
6	PT26413006	HANDLE CAP
7	PT26413007	SLIDING HANDLE
8	PT26413008	SPLINE SHAFT
9	PT26413009	SET SCREW M8-1.25 X 8
11	PT26413011	RAM
12	PT26413012	DIE-ROUND NOSE
13	PT26413013	DIE-SQUARE HEAD
14	PT26413014	DIE-CONE POINT
15	PT26413015	FRONT PLATE

REF	PART #	DESCRIPTION
16	PT26413016	HEX BOLT M6-1 X 25
17	PT26413017	SET SCREW M6-1 X 12
18	PT26413018	HEX NUT M6-1
19	PT26413019	HANDLE KNOB BOLT M8-1.25 X 10
20	PT26413020	HEX WRENCH 3MM
21	PT26413021	HEX WRENCH 4MM
22	PT26413022	HEX WRENCH 5MM
23	PT26413023	KEY 6 X 20
24	PT26413024	SET SCREW M8-1.25 X 10
25	PT26413025	HEX NUT M10-1.5
26	PT26413026	HANDWHEEL HANDLE
27	PT26413027	SHOULDER SCREW M10-1.5 X 80
28	PT26413028	HANDWHEEL

T26414-15 Parts List

REF	PART #	DESCRIPTION
1	PT26414001	BODY (T26414)
1	PT26415001	BODY (T26415)
2	PT26414002	SET SCREW M8-1.25 X 30
3	PT26414003	HEX NUT M8-1.25
4	PT26414004	TABLE (T26414)
4	PT26415004	TABLE (T26415)
5	PT26414005	CAP SCREW M6-1 X 20
6	PT26414006	HANDLE CAP (T26414)
6	PT26415006	HANDLE CAP (T26415)
7	PT26414007	SLIDING HANDLE (T26414)
7	PT26415007	SLIDING HANDLE (T26415)
8	PT26414008	SPLINE SHAFT
8	PT26415008	SPLINE SHAFT (T26415)
9	PT26414009	SET SCREW M8-1.25 X 8
10	PT26414010	LOCK COLLAR (T26414)

REF	PART #	DESCRIPTION
10	PT26415010	LOCK COLLAR (T26415)
11	PT26414011	RAM (T26414)
11	PT26415011	RAM (T26415)
12	PT26414012	DIE-ROUND NOSE
13	PT26414013	DIE-SQUARE HEAD
14	PT26414014	DIE-CONE POINT
15	PT26414015	FRONT PLATE (T26414)
15	PT26415015	FRONT PLATE (T26415)
16	PT26414016	HEX BOLT M6-1 X 30
17	PT26414017	SET SCREW M8-1.25 X 30
18	PT26414018	HEX NUT M8-1.25
19	PT26414019	HANDLE KNOB BOLT M8-1.25 X 15
21	PT26414021	HEX WRENCH 4MM
22	PT26414022	HEX WRENCH 5MM