MODEL T26413, T26414, & T26415
ARBOR PRESS
INSTRUCTIONS

For questions or help with this product contact Tech Support at (570) 546-9663 or techsupport@grizzly.com

Introduction

This arbor press is designed to perform small press jobs, such as staking, riveting, and installing/removing bearings. The ram accepts dies, inserts, and other tooling for custom work.

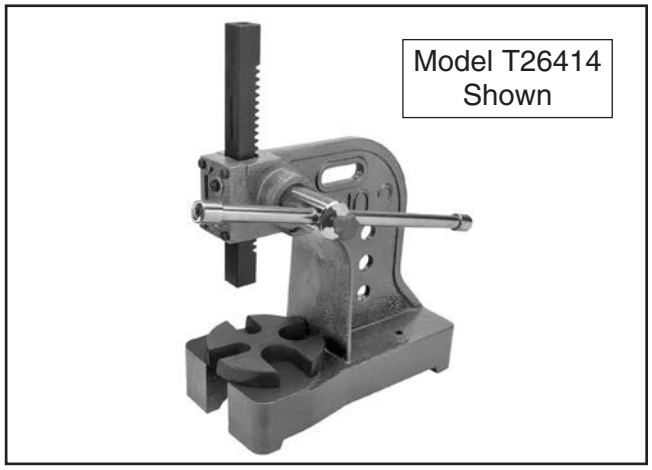

Figure 1. Model T26414 arbor press.



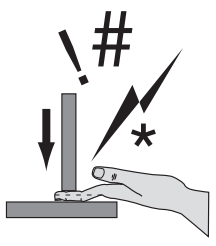

⚠WARNING

Material under pressure could fly apart and cause impact injuries. Always wear safety glasses when using this press.

Keep hands and fingers away from the ram when applying downward pressure to avoid pinching injuries.

Specifications

T26413

Press Capacity	1 Ton
Throat Depth	4"
Maximum Workpiece Height	6⅛"
Ram Size	1" x 1"
Ram Bore	½" Diameter x ½" Deep
Base Size	6" W 10½" D
Overall Size	7¼" W x 11" D x 13" H
Weight	32 lbs.

T26414

Press Capacity	2 Tons
Throat Depth	6"
Maximum Workpiece Height	8"
Ram Size	1¼" x 1¼"
Ram Bore	½" Diameter x ½" Deep
Base Size	8" W x 16" D
Overall Size	11½" W x 16½" D x 18" H
Weight	68 lbs.

T26415

Press Capacity	3 Tons
Throat Depth	6¼"
Maximum Workpiece Height	12¾"
Ram Size	1½" x 1½"
Ram Bore	½" Diameter x ½" Deep
Base Size	8" W x 18" D
Overall Size	11½" W x 18" D x 21½" H
Weight	108 lbs.

NOTICE

This arbor press is designed to only be used for small parts. Do not use this arbor press for operations beyond its capacity or modify it for increased leverage.

COPYRIGHT © NOVEMBER, 2013 BY GRIZZLY INDUSTRIAL, INC., REVISED MAY, 2015 (MN)
NO PORTION OF THIS MANUAL MAY BE REPRODUCED IN ANY SHAPE OR FORM WITHOUT THE WRITTEN APPROVAL OF GRIZZLY INDUSTRIAL, INC.
#TS16037 PRINTED IN CHINA
V2.05.15

Small Item Inventory (Figure 2)

Description	Qty
A. Sliding Handle Assembly	1
B. Handle Lock Knob Bolt	1
C. Handwheel Handle (T26413 Only)	1
D. Handwheel (T26413 Only)	1
E. Table	1
F. Hex Wrench 3mm (T26413 Only)	1
G. Hex Wrench 4mm	1
H. Hex Wrench 5mm	1
I. Round-Nose Die	1
J. Cone-Point Die	1
K. Square Die	1

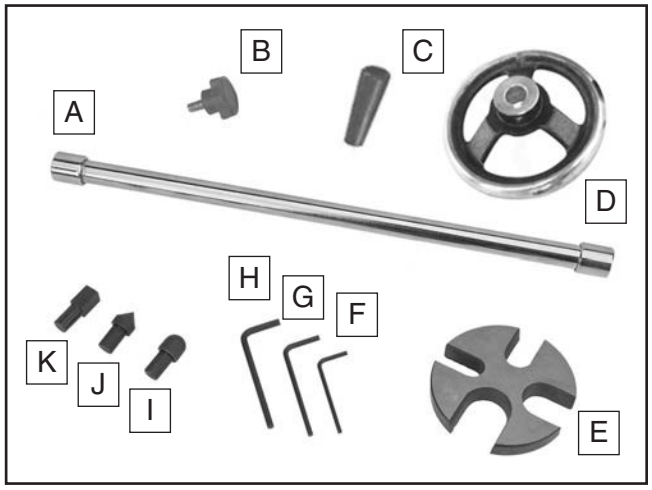

Figure 2. Small item inventory.



⚠WARNING

HEAVY LIFT!

Straining or crushing injury may occur from improperly lifting the arbor press. To reduce this risk, get help from other people or lifting equipment rated for weight of the arbor press.

Cleanup

The unpainted surfaces of your machine are coated with a heavy-duty rust preventative that prevents corrosion during shipment and storage. This rust preventative works extremely well, but it will take a little time to clean.

Be patient and do a thorough job cleaning your machine. The time you spend doing this now will give you a better appreciation for the proper care of your machine's unpainted surfaces.

There are many ways to remove this rust preventative, but the following steps work well in a wide variety of situations. Always follow the manufacturer's instructions with any cleaning product you use and make sure you work in a well-ventilated area to minimize exposure to toxic fumes.

Before cleaning, gather the following:

- Disposable Rags
- Cleaner/degreaser (WD•40 works well)
- Safety glasses & disposable gloves
- Plastic paint scraper (optional)

Basic steps for removing rust preventative:

1. Put on safety glasses.

2. Coat the rust preventative with a liberal amount of cleaner/degreaser (see **Page 8** for offerings from Grizzly), then let it soak for 5–10 minutes.

3. Wipe off the surfaces. If your cleaner/degreaser is effective, the rust preventative will wipe off easily. If you have a plastic paint scraper, scrape off as much as you can first, then wipe off the rest with the rag.

4. Repeat **Steps 2–3** as necessary until clean, then coat all unpainted surfaces with a quality metal protectant to prevent rust.

NOTICE

Avoid chlorine-based solvents, such as acetone or brake parts cleaner, that may damage painted surfaces.

Mounting

Because of the dynamic forces involved in operating the arbor press, we strongly recommend that you mount it to a benchtop or other stable working surface to prevent it from moving during operation and causing accidental injury or damage.

The base of the arbor press has 3/8" mounting holes on each side of the upright (see **Figure 3**).

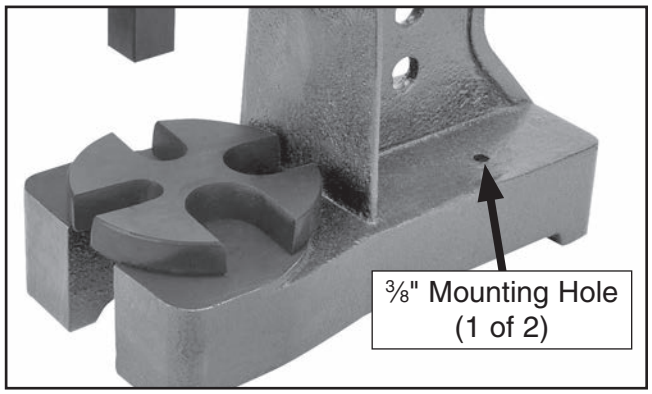

Figure 3. Mounting hole (1 of 2).

The strongest mounting option is a "Through Mount" (see example below) where holes are drilled all the way through the workbench—and hex bolts, washers, and hex nuts are used to secure the machine in place.

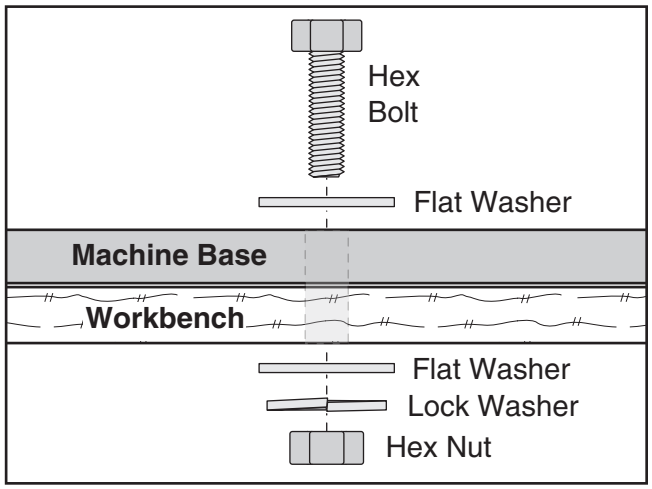

Figure 4. Example of a "Through Mount" setup.

Another option is a "Direct Mount" (see example below) where the machine is secured directly to the workbench with lag screws and washers.

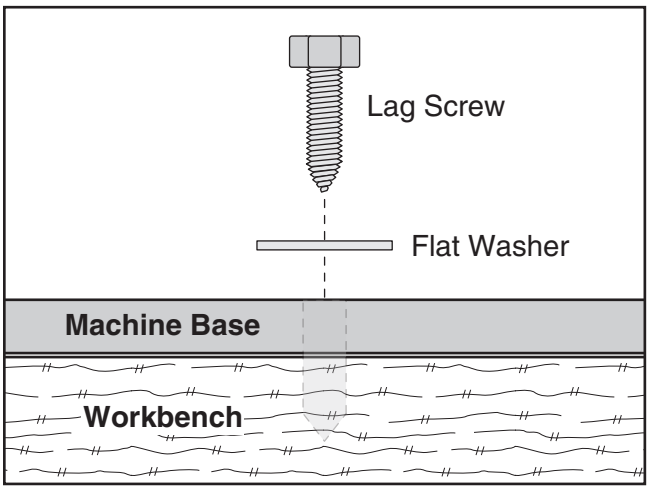

Figure 5. Example of a "Direct Mount" setup.

Assembly

1. Remove cap at one end of sliding handle assembly (see **Figure 6**).

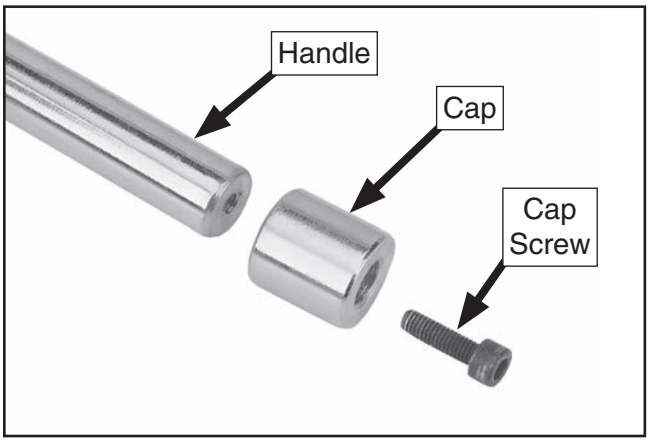

Figure 6. Handle cap removed.

2. Insert handle through handle hub and re-install cap, as shown in **Figure 7**.

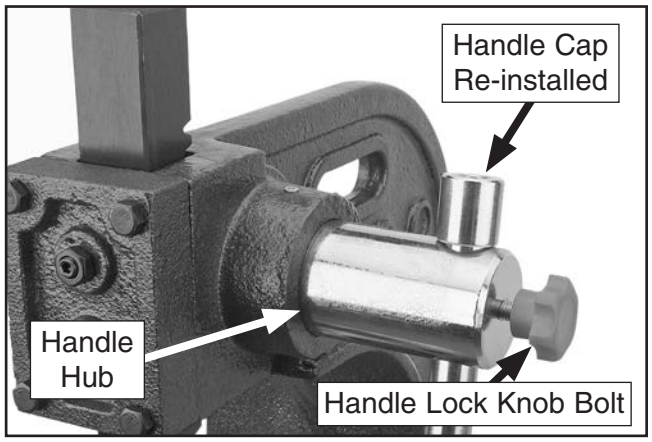

Figure 7. Sliding handle installed.

3. Thread handle lock knob bolt into hub, as shown in **Figure 7**. When tightened, this knob bolt secures handle in position relative to hub.

4. Raise ram and insert table plate pin into base (see **Figure 8**).

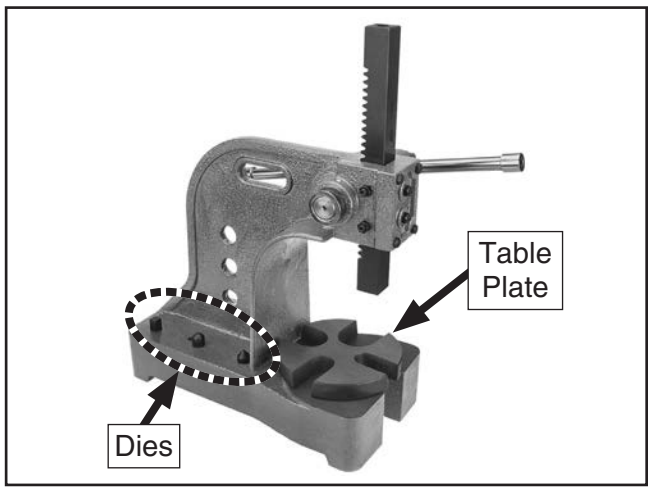

Figure 8. Table plate and dies.

5. Insert included dies in provided storage holes on base (see **Figure 8**).

Table Plate

Rotate table plate to align desired table opening size under ram (see **Figure 8**).

Installing Dies/Tooling

The included dies or custom tooling is inserted into the ram bore, which has a ½" diameter, ½" depth, and a magnet at the bottom of the bore to hold the tooling in place (see **Figure 9** for an example).

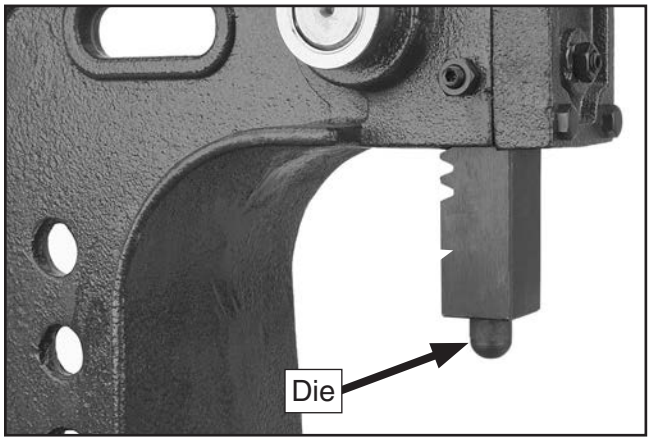

Figure 9. Example photo of die installed in ram.

Flipping Ram

The ram can be flipped end-over-end, depending whether the solid end or the end with the bore is needed for the operation.

Tools Needed	**Qty**
Wrench or Socket 10mm (T26413)	1
Wrench or Socket 12mm (T26414, T26415)	1

To flip the ram:

1. Remove hex bolts shown in **Figure 10**, then remove front plate to access ram rack-and-pinion (see **Figure 11** on next page).

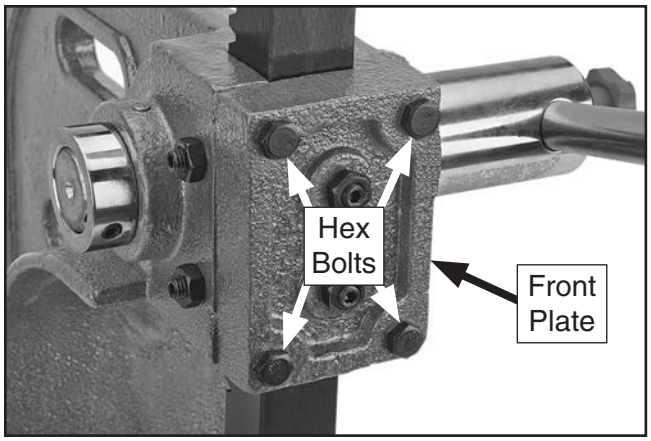

Figure 10. Hex bolts that secure front plate.

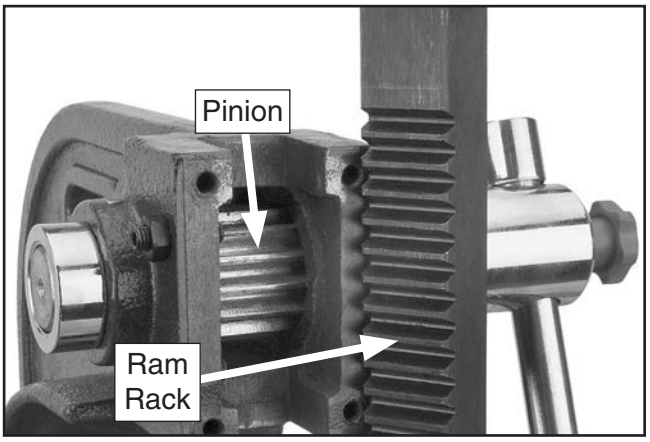

Figure 11. Ram rack and pinion.

2. Remove the ram from press, then flip it end-over-end as needed for operation.

3. Re-insert ram into housing and mesh ram rack with pinion.

4. Re-install the front plate.

Adjusting Ram Play

Set screws on the front and left side of the ram housing (see **Figure 12**) adjust the amount of ram free-play. The ideal adjustment allows the ram to move with very little play but not be overly stiff.

T26413 Tools Needed	**Qty**
Wrench or Socket 10mm	1
Hex Wrench 3mm	1

T26414-15 Tools Needed	**Qty**
Wrench or Socket 14mm	1
Hex Wrench 4mm	1

To adjust ram play:

1. Loosen hex nuts on set screws shown in **Figure 12**.

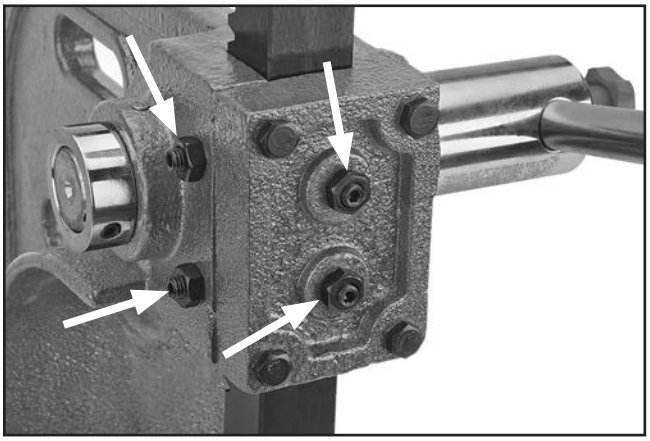

Figure 12. Ram free-play adjustment controls.

2. Equally adjust each pair of set screws a small amount in same direction (clockwise to decrease free-play, counterclockwise to increase free-play).

3. Use sliding handle to move ram up and down a few times. Adjust set screws as necessary.

4. When you are satisfied with the amount of ram free-play, retighten hex nuts without moving set screws.

Cleaning & Protecting

Wipe the arbor press down with a clean shop rag and mineral spirits. When dry, protect the unpainted surfaces by applying a thin film of ISO 32 oil.

Lubrication

Ball Oilers

Oil Type .....Model T23963 or ISO 32 Equivalent
Oil Amount..... 1–2 Pumps
Lubrication Frequency.....8 Hrs. of Operation

Proper lubrication of the two ball oilers (see **Figure 13**) is done with a pump-type oil can that has a plastic or rubberized cone tip. We do not recommend using metal needle or lance tips, as they can push the ball too far into the oiler, break the spring seat, and lodge the ball in the oil galley.

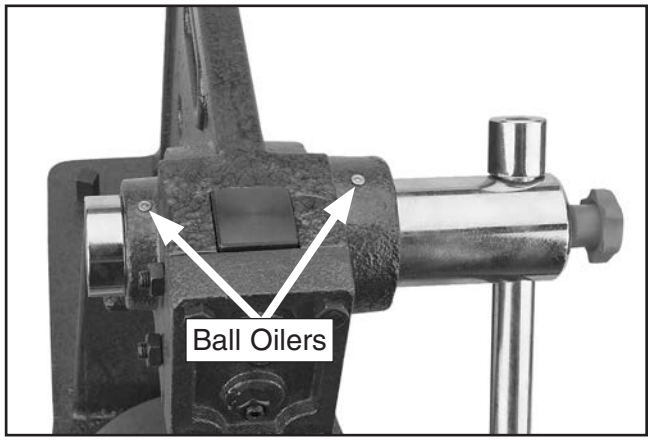

Figure 13. Locations of ball oilers.

Push the tip of the oil can nozzle against the ball oiler to create a hydraulic seal, then pump the oil can once or twice. If you see sludge and contaminants coming out of the lubrication area, continue pumping the oil can until the oil runs clear. Move the components through the entire path of travel a few times to distribute the oil. When finished, wipe away the excess oil.

Rack & Pinion

Grease.....Model T23964 or NLGI#2 Equivalent
Grease Amount ..... As Needed
Lubrication Frequency.....40 Hrs. of Operation

Tools Needed	Qty
Wrench or Socket 10mm (T26413)	1
Wrench or Socket 12mm (T26414, T26415)	1

To lubricate rack and pinion:

1. Remove front plate to remove ram and expose pinion (see **Figure 14**).

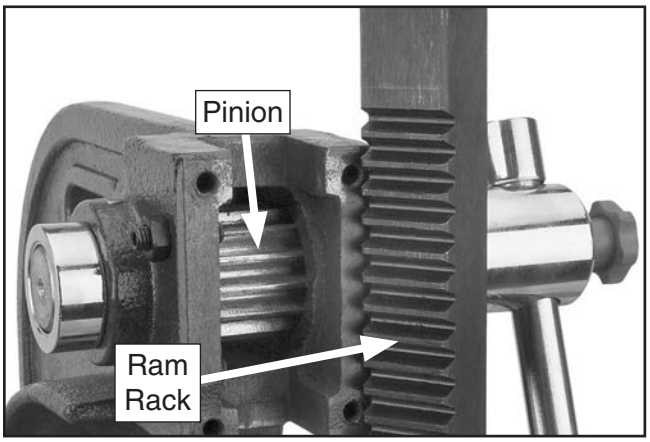

Figure 14. Ram rack and pinion.

2. Use shop rags, stiff brush, and mineral spirits to clean teeth of rack and pinion.
3. When dry, apply a light coat of grease to rack and pinion teeth.
4. Re-install ram and front plate.
5. Use sliding handle to move ram up and down several times to distribute the grease.

Parts

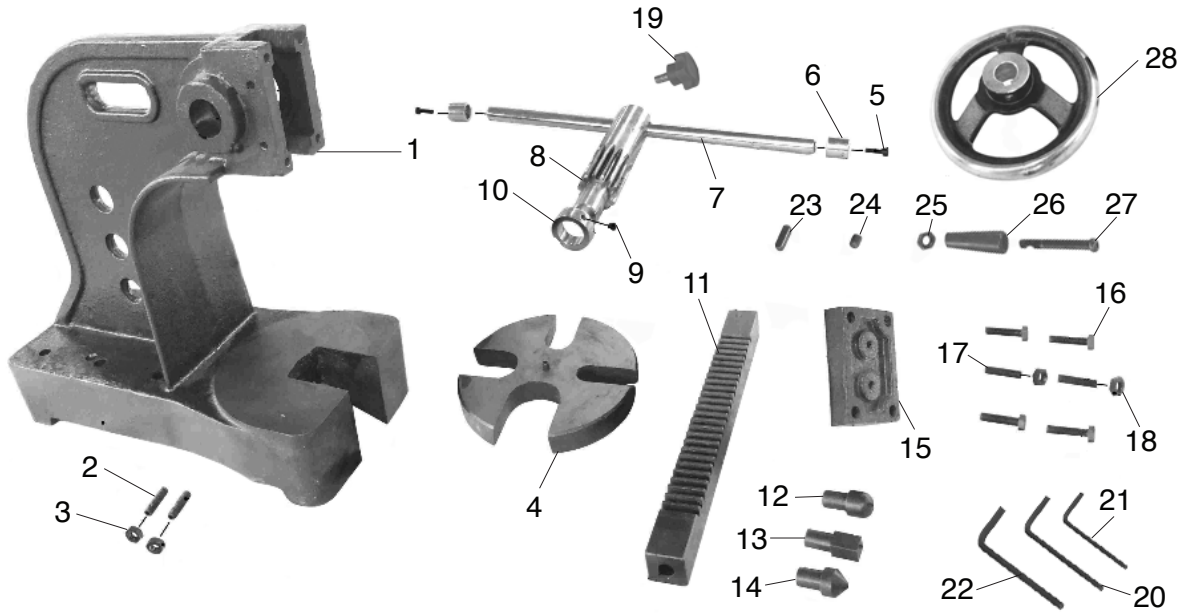

T26413 Parts List

REF	PART #	DESCRIPTION
1	PT26413001	BODY
2	PT26413002	SET SCREW M6-1 X 25
3	PT26413003	HEX NUT M6-1
4	PT26413004	TABLE
5	PT26413005	CAP SCREW M5-.8 X 12
6	PT26413006	HANDLE CAP
7	PT26413007	SLIDING HANDLE
8	PT26413008	SPLINE SHAFT
9	PT26413009	SET SCREW M8-1.25 X 8
11	PT26413011	RAM
12	PT26413012	DIE-ROUND NOSE
13	PT26413013	DIE-SQUARE HEAD
14	PT26413014	DIE-CONE POINT
15	PT26413015	FRONT PLATE

REF	PART #	DESCRIPTION
16	PT26413016	HEX BOLT M6-1 X 25
17	PT26413017	SET SCREW M6-1 X 12
18	PT26413018	HEX NUT M6-1
19	PT26413019	HANDLE KNOB BOLT M8-1.25 X 10
20	PT26413020	HEX WRENCH 3MM
21	PT26413021	HEX WRENCH 4MM
22	PT26413022	HEX WRENCH 5MM
23	PT26413023	KEY 6 X 20
24	PT26413024	SET SCREW M8-1.25 X 10
25	PT26413025	HEX NUT M10-1.5
26	PT26413026	HANDWHEEL HANDLE
27	PT26413027	SHOULDER SCREW M10-1.5 X 80
28	PT26413028	HANDWHEEL

T26414-15 Parts List

REF	PART #	DESCRIPTION
1	PT26414001	BODY (T26414)
1	PT26415001	BODY (T26415)
2	PT26414002	SET SCREW M8-1.25 X 30
3	PT26414003	HEX NUT M8-1.25
4	PT26414004	TABLE (T26414)
4	PT26415004	TABLE (T26415)
5	PT26414005	CAP SCREW M6-1 X 20
6	PT26414006	HANDLE CAP (T26414)
6	PT26415006	HANDLE CAP (T26415)
7	PT26414007	SLIDING HANDLE (T26414)
7	PT26415007	SLIDING HANDLE (T26415)
8	PT26414008	SPLINE SHAFT
8	PT26415008	SPLINE SHAFT (T26415)
9	PT26414009	SET SCREW M8-1.25 X 8
10	PT26414010	LOCK COLLAR (T26414)

REF	PART #	DESCRIPTION
10	PT26415010	LOCK COLLAR (T26415)
11	PT26414011	RAM (T26414)
11	PT26415011	RAM (T26415)
12	PT26414012	DIE-ROUND NOSE
13	PT26414013	DIE-SQUARE HEAD
14	PT26414014	DIE-CONE POINT
15	PT26414015	FRONT PLATE (T26414)
15	PT26415015	FRONT PLATE (T26415)
16	PT26414016	HEX BOLT M6-1 X 30
17	PT26414017	SET SCREW M8-1.25 X 30
18	PT26414018	HEX NUT M8-1.25
19	PT26414019	HANDLE KNOB BOLT M8-1.25 X 15
21	PT26414021	HEX WRENCH 4MM
22	PT26414022	HEX WRENCH 5MM

Accessories

⚠WARNING

Installing unapproved accessories may cause machine to malfunction, resulting in serious personal injury or machine damage. To reduce this risk, only install accessories recommended for this machine by Grizzly.

NOTICE

Refer to our website or latest catalog for additional recommended accessories.

T23964—Armor Plate with Moly-D Multi-Purpose Grease, 14.5 oz. (NLGI#2 Equivalent)
Armor Plate with Moly-D is a rich green moly grease that provides excellent stability and unsurpassed performance under a wide range of temperatures and operating conditions. Armor Plate grease is entirely unique due to the fact that the moly in it is solubilized, which provides superior performance to other greases containing the black solid form of molybdenum disulfide.



Figure 15. T23964 Armor Plate with Moly-D Multi-Purpose Grease

G2544—Solvent Cleaner & Degreaser
T23692—Orange Power Degreaser
Great products for removing shipping grease.



Figure 16. Cleaner/degreasers.

T23962—ISO 68 Moly-D Way Oil, 5 gal.
T23963—ISO 32 Moly-D Machine Oil, 5 gal.
Moly-D oils are some of the best we've found for maintaining the critical components of machinery because they tend to resist run-off and maintain their lubricity under a variety of conditions—as well as reduce chatter or slip. Buy in bulk and save with 5-gallon quantities.



Figure 17. ISO 68 and ISO 32 machine oil.

High-Pressure Oil Can
H7615—Steel Nozzle
Whether you are lubricating cutting tools or maintaining machinery in top operating condition, you will appreciate this High-Pressure Oil Can. Can holds 5 ounces of oil and has a trigger-activated, high-pressure pump.



Figure 18. High-pressure oil can.

order online at www.grizzly.com or call 1-800-523-4777