T25926 Breakdown

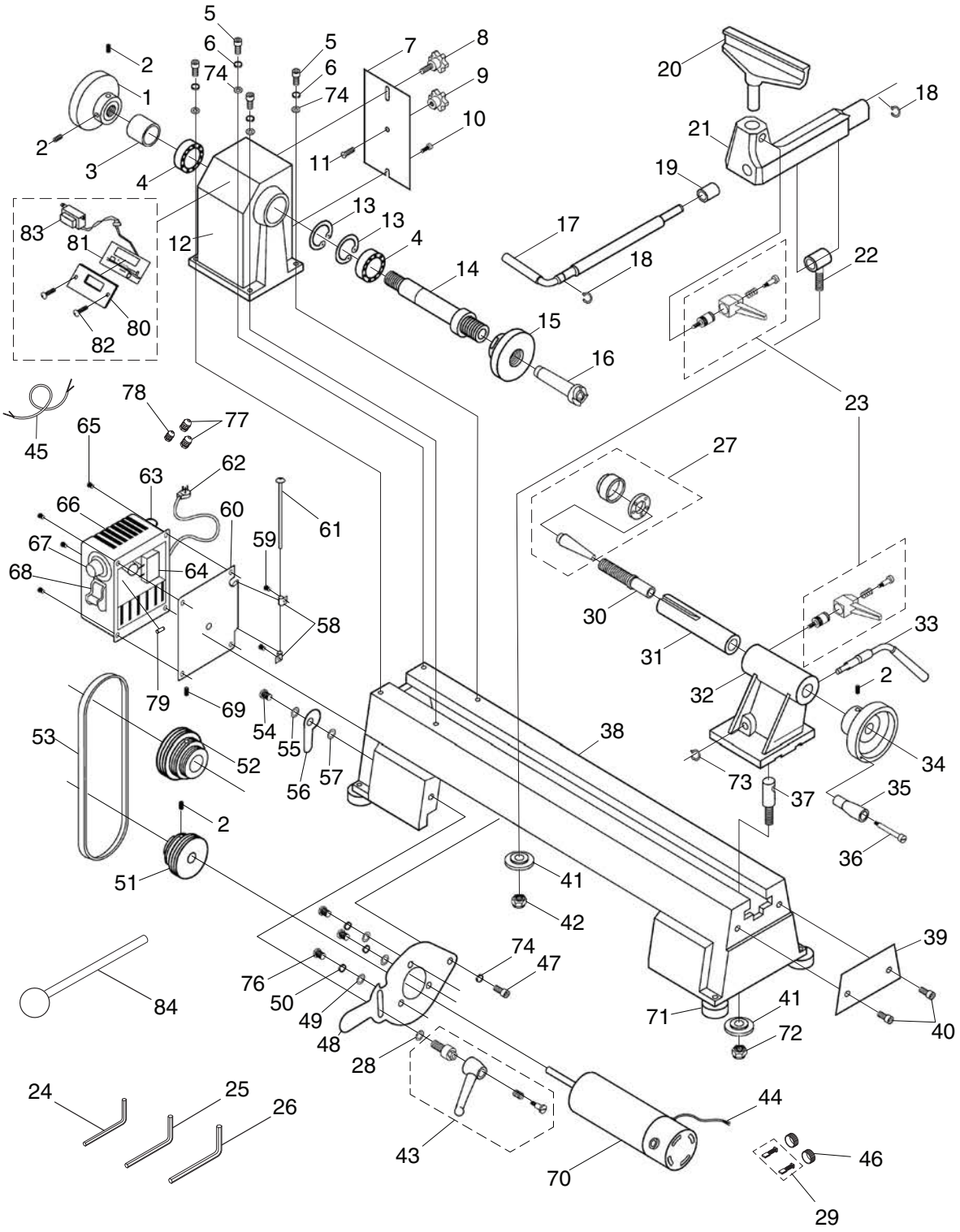

Please Note: *We do our best to stock replacement parts whenever possible, but we cannot guarantee that all parts shown here are available for purchase. Call* ***(800) 523-4777*** *or visit our online parts store at* ***www.grizzly.com*** *to check for availability.*

BUY PARTS ONLINE AT GRIZZLY.COM!
Scan QR code to visit our Parts Store.

T25926 Parts List

REF	PART #	DESCRIPTION
1	PT25926001	HANDWHEEL 82MM X M18-2.5 LH BORE
2	PT25926002	SET SCREW M6-1 X 12
3	PT25926003	COLLAR SPINDLE
4	PT25926004	BALL BEARING 80105
5	PT25926005	CAP SCREW M8-1.25 X 25
6	PT25926006	LOCK WASHER 8MM
7	PT25926007	REAR BELT ACCESS DOOR
8	PT25926008	THUMB SCREW M5-.8 X 9
9	PT25926009	STATIONARY KNOB M5-.8
10	PT25926010	SHOULDER SCREW M5-.8 X 7, 2
11	PT25926011	FLAT HD SCR M5-.8 X 10
12	PT25926012	HEADSTOCK
13	PT25926013	INT RETAINING RING 47MM
14	PT25926014	HEADSTOCK SPINDLE
15	PT25926015	FACEPLATE 3-1/8"
16	PT25926016	SPUR CENTER MT#2
17	PT25926017	TOOL REST LOCK HANDLE
18	PT25926018	EXT RETAINING RING 10MM
19	PT25926019	TOOLREST BUSHING
20	PT25926020	TOOLREST 145MM
21	PT25926021	TOOLREST BASE
22	PT25926022	TOOLREST CAM FOLLOWER
23	PT25926023	ADJUSTABLE HANDLE M8-1.25 X 20
24	PT25926024	HEX WRENCH 3MM
25	PT25926025	HEX WRENCH 6MM
26	PT25926026	HEX WRENCH 8MM
27	PT25926027	LIVE CENTER MT#2
28	PT25926028	FENDER WASHER 8MM
29	PT25926029	MOTOR CARBON BRUSH 2-PC SET
30	PT25926030	TAILSTOCK LEADSCREW
31	PT25926031	TAILSTOCK QUILL
32	PT25926032	TAILSTOCK
33	PT25926033	TAILSTOCK LEVER
34	PT25926034	HANDWHEEL 83MM X 15MM BORE
35	PT25926035	HANDWHEEL HANDLE 6MM X 50MM
36	PT25926036	SHOULDER SCREW M6-1 X 53
37	PT25926037	TAILSTOCK CLAMP BOLT M8-1.25 X 30
38	PT25926038	BED
39	PT25926039	RETAINING PLATE
40	PT25926040	CAP SCREW M10-1.5 X 12
41	PT25926041	LOCK PLATE
42	PT25926042	LOCK NUT M10-1.5

REF	PART #	DESCRIPTION
43	PT25926043	MOTOR PLATE HANDLE ASSEMBLY
44	PT25926044	MOTOR CORD 18G 3W 16"
45	PT25926045	SWITCH CORD 18G 3W 22"
46	PT25926046	MOTOR CARBON BRUSH CAP
47	PT25926047	CAP SCREW M8-1.25 X 12
48	PT25926048	MOTOR MOUNT PLATE
49	PT25926049	FLAT WASHER 6MM
50	PT25926050	LOCK WASHER 6MM
51	PT25926051	MOTOR PULLEY
52	PT25926052	DRIVE PULLEY
53	PT25926053	POLY V-BELT 7 X 630MM
54	PT25926054	SWITCH BOX LATCH BOLT M4-.7 X 5
55	PT25926055	WAVY WASHER 6MM
56	PT25926056	SWITCH BOX LATCH
57	PT25926057	FLAT WASHER 4MM
58	PT25926058	HINGE
59	PT25926059	PHLP HD SCR M4-.7 X 8
60	PT25926060	SWITCH BOX PLATE
61	PT25926061	HINGE PIN
62	PT25926062	POWER CORD 18G 3W 72" 5-15P
63	PT25926063	CIRCUIT BREAKER 4A GENERAL
64	PT25926064	CIRCUIT BOARD
65	PT25926065	PHLP HD SCR M4-.7 X 6
66	PT25926066	SWITCH BOX
67	PT25926067	POTENTIOMETER B103
68	PT25926068	TOGGLE SWITCH RU CB-8 E19 4417
69	PT25926069	SET SCREW M6-1 X 12
70	PT25926070	MOTOR 375W 110VDC
71	PT25926071	RUBBER FOOT M8-1.25 X 15
72	PT25926072	LOCK NUT M8-1.25
73	PT25926073	EXT RETAINING RING 10MM
74	PT25926074	FLAT WASHER 8MM
76	PT25926076	FLAT HD SCR M6-1 X 12
77	PT25926077	STRAIN RELIEF 5/16" SNAP-IN ST
78	PT25926078	STRAIN RELIEF 1/4" SNAP-IN ST
79	PT25926079	FUSE 10A 250V FAST-ACTING GLASS
80	PT25926080	DIGITAL DISPLAY COVER
81	PT25926081	DIGITAL DISPLAY PLATE
82	PT25926082	PHLP HD SCR M4-.7 X 16
83	PT25926083	TRANSFORMER 110V/9V
84	PT25926084	KNOCKOUT BAR

T25920/T25926 Labels & Cosmetics

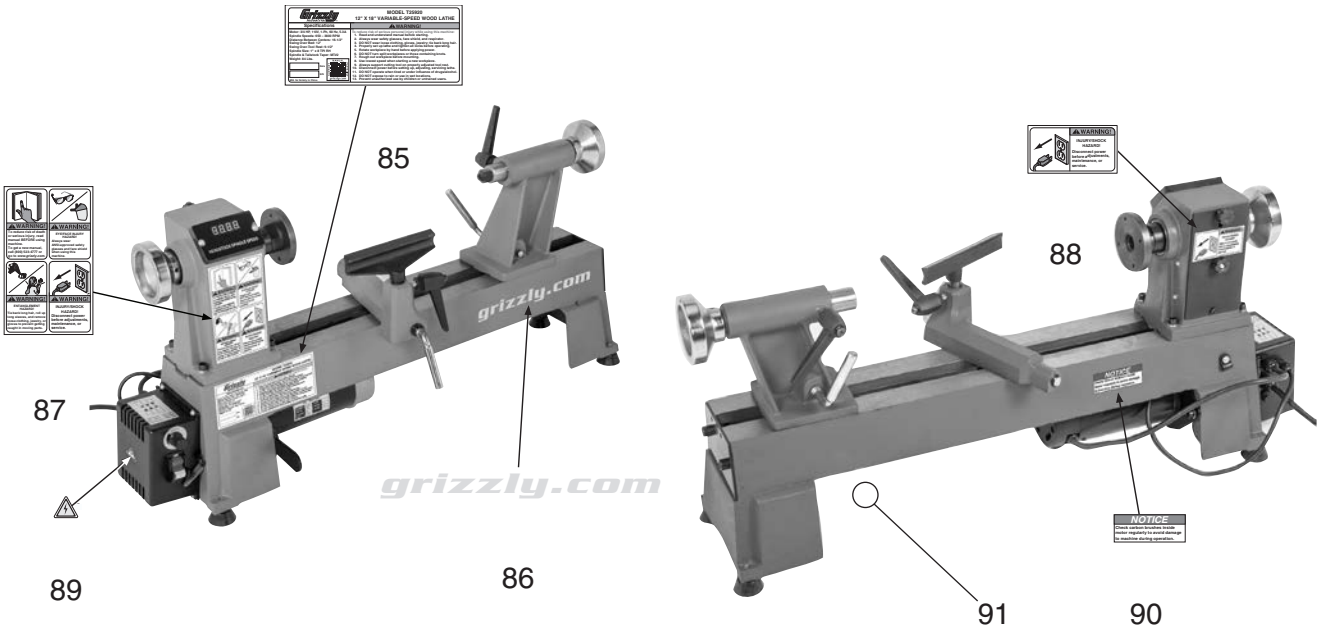

REF	PART #	DESCRIPTION
85	PT25920085	MACHINE ID LABEL (T25920)
85	PT25926085	MACHINE ID LABEL (T25926)
86	PT25920086	GRIZZLY.COM LABEL
87	PT25920087	SAFETY WARNING LABEL

REF	PART #	DESCRIPTION
88	PT25920088	SHOCK HAZARD LABEL
89	PT25920089	ELECTRICITY LABEL
90	PT25920090	CARBON BRUSHES NOTICE LABEL
91	PT25920091	GRIZZLY GREEN TOUCH-UP PAINT

⚠WARNING

Safety labels help reduce the risk of serious injury caused by machine hazards. If any label comes off or becomes unreadable, the owner of this machine MUST replace it in the original location before resuming operations. For replacements, contact (800) 523-4777 or www.grizzly.com.