SB1092 Parts

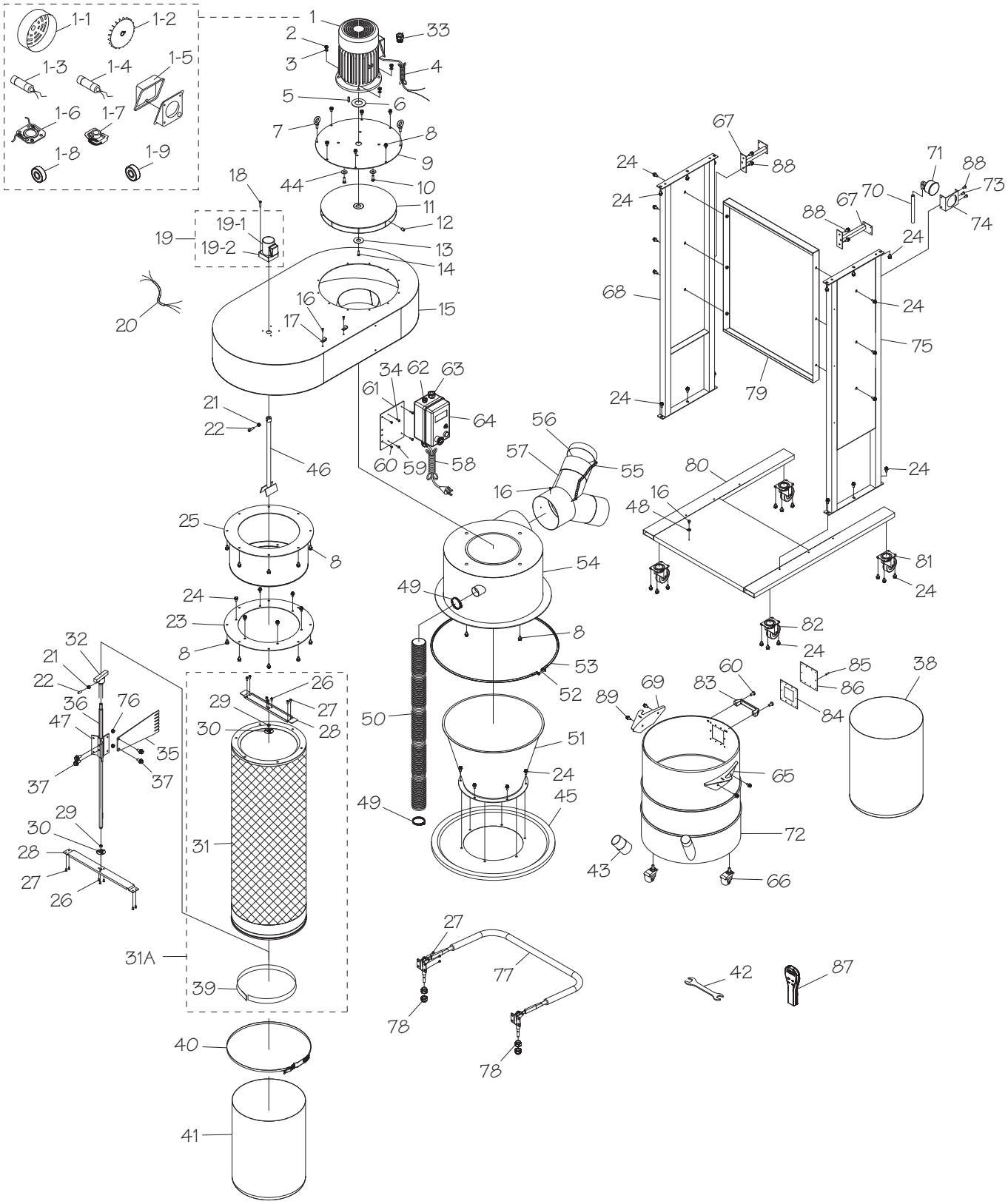

SB1092 Parts List

REF	PART #	DESCRIPTION
1	PSB1092001	MOTOR 2HP 220V 1-PH
1-1	PSB1092001-1	MOTOR FAN COVER
1-2	PSB1092001-2	MOTOR FAN
1-3	PSB1092001-3	S CAPACITOR 300M 125V
1-4	PSB1092001-4	R CAPACITOR 30M 250V
1-5	PSB1092001-5	JUNCTION BOX
1-6	PSB1092001-6	CONTACT PLATE
1-7	PSB1092001-7	CENTRIFUGAL SWITCH
1-8	PSB1092001-8	FRONT MOTOR BEARING 6205RZ
1-9	PSB1092001-9	REAR MOTOR BEARING 6203RZ
2	PSB1092002	HEX NUT 5/16-18
3	PSB1092003	LOCK WASHER 5/16
4	PSB1092004	MOTOR CORD 12G 3W 18"
5	PSB1092005	KEY 7 X 7 X 30
6	PSB1092006	RUBBER GASKET
7	PSB1092007	EYE BOLT 3/4", 5/16-18 X 5/8
8	PSB1092008	FLANGE BOLT 5/16-18 X 3/4
9	PSB1092009	MOTOR PLATE
10	PSB1092010	HEX BOLT 5/16-18 X 1
11	PSB1092011	IMPELLER 14.5" ALUMINUM
12	PSB1092012	SET SCREW 3/8-16 X 3/4
13	PSB1092013	IMPELLER WASHER
14	PSB1092014	CAP SCREW M6-1 X 25
15	PSB1092015	MAIN HOUSING
16	PSB1092016	TAP SCREW #10 X 3/8
17	PSB1092017	WIRE CLIP UC4
18	PSB1092018	CAP SCREW M4-.7 X 60
19	PSB1092019	FILTER BRUSH MOTOR ASSEMBLY
19-1	PSB1092019-1	MOTOR 6W 220V 1-PH
19-2	PSB1092019-2	GEAR REDUCER LUYANG 2GN90(B1)
20	PSB1092020	MOTOR CORD 14G 4W 22"
21	PSB1092021	HEX NUT M5-.8
22	PSB1092022	SET SCREW M5-.8 X 12
23	PSB1092023	CANISTER MOUNTING PLATE
24	PSB1092024	FLANGE BOLT 5/16-18 X 1/2
25	PSB1092025	MUFFLER
26	PSB1092026	PHLP HD SCR M5-.8 X 6
27	PSB1092027	PHLP HD SCR M5-.8 X 8
28	PSB1092028	SELF-ALIGNING SPINDLE MOUNTING PLATE
29	PSB1092029	BALL BEARING 1206
30	PSB1092030	BEARING RETAINER
31A	PSB1092031A	CANISTER FILTER ASSEMBLY
31	PSB1092031	CANISTER FILTER
32	PSB1092032	FILTER BRUSH SPINDLE CAP
33	PSB1092033	STRAIN RELIEF TYPE-3 M16-2
34	PSB1092034	PHLP HD SCR 10-24 X 1/4
35	PSB1092035	SCRAPER
36	PSB1092036	FILTER BRUSH SPINDLE
37	PSB1092037	FLANGE BOLT M5-.8 X 12
38	PSB1092038	DRUM COLLECTION BAG (PLASTIC)
39	PSB1092039	FOAM TAPE 3/4"

REF	PART #	DESCRIPTION
40	PSB1092040	BAG CLAMP
41	PSB1092041	FILTER COLLECTION BAG (PLASTIC)
42	PSB1092042	WRENCH 10 X 12MM OPEN-ENDS
43	PSB1092043	QUICK CONNECTOR
44	PSB1092044	FENDER WASHER 3/8
45	PSB1092045	DRUM LID
46	PSB1092046	FILTER BRUSH MOTOR SHAFT
47	PSB1092047	SCRAPER MOUNT
48	PSB1092048	EXT TOOTH WASHER 4MM
49	PSB1092049	HOSE CLAMP 2"
50	PSB1092050	FLEXIBLE HOSE 2"
51	PSB1092051	CYCLONE FUNNEL
52	PSB1092052	HEX BOLT 1/4-20 X 2-1/2
53	PSB1092053	CONE CLAMP
54	PSB1092054	INTAKE HOUSING
55	PSB1092055	CHAIN
56	PSB1092056	INLET CAP 4"
57	PSB1092057	INLET ADAPTER 8" X 4" X 2
58	PSB1092058	POWER CORD 14G 3W 130" 6-15P
59	PSB1092059	PHLP HD SCR 10-24 X 1/4
60	PSB1092060	FLAT HD SCR 1/4-20 X 1/2
61	PSB1092061	SWITCH BOX MOUNTING PLATE
62	PSB1092062	STRAIN RELIEF TYPE-3 M16-2
63	PSB1092063	STRAIN RELIEF TYPE-3 M20-2.5
64	PSB1092064	MAGNETIC SWITCH
65	PSB1092065	LEFT DRUM BRACKET
66	PSB1092066	DRUM CASTER 2"
67	PSB1092067	HANDLE BRACKET
68	PSB1092068	RIGHT SIDE PANEL
69	PSB1092069	RIGHT DRUM BRACKET
70	PSB1092070	CLEAR TUBE 6 X 175MM
71	PSB1092071	VACUUM PRESSURE GAUGE
72	PSB1092072	COLLECTION DRUM
73	PSB1092073	PHLP HD SCR 10-24 X 1/2
74	PSB1092074	VACUUM GAUGE MOUNT
75	PSB1092075	LEFT SIDE PANEL
76	PSB1092076	FLANGE NUT M5-.8
77	PSB1092077	DRUM LOCK HANDLE
78	PSB1092078	LOCK NUT M10-1.5
79	PSB1092079	SUPPORT PANEL
80	PSB1092080	BASE
81	PSB1092081	CASTER 3"
82	PSB1092082	LOCKING CASTER 3"
83	PSB1092083	DRUM HANDLE
84	PSB1092084	WINDOW SEAL
85	PSB1092085	RIVET 9 X 3 BLIND
86	PSB1092086	DRUM WINDOW
87	PSB1092087	REMOTE CONTROL
88	PSB1092088	FLANGE BOLT 1/4-20 X 1/2
89	PSB1092089	FLANGE BOLT 5/16-18 X 3/8

SB1094 Parts

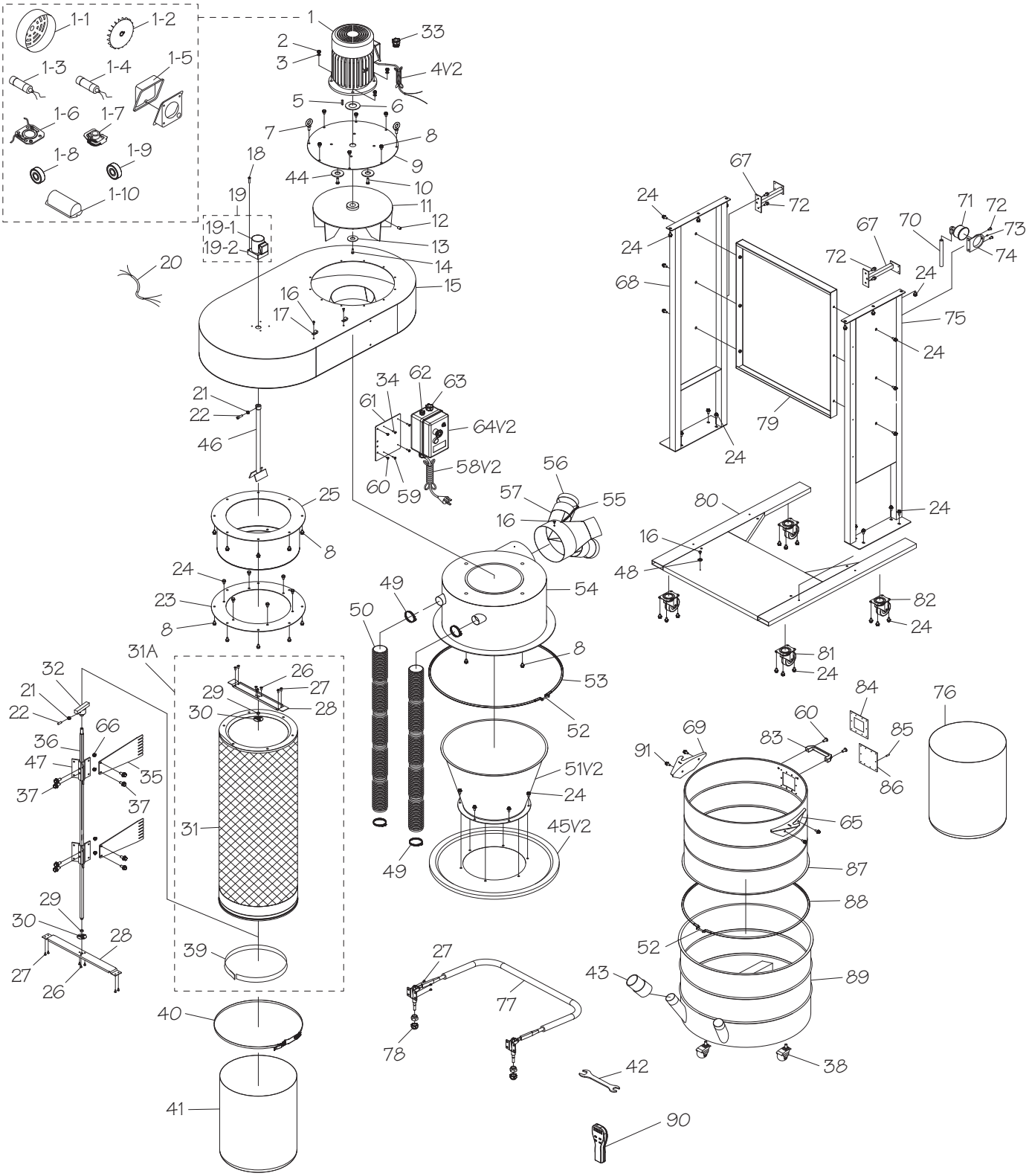

SB1094 Parts List

REF	PART #	DESCRIPTION
1	PSB1094001	MOTOR 5HP 220V 1-PH
1-1	PSB1094001-1	MOTOR FAN COVER
1-2	PSB1094001-2	MOTOR FAN
1-3	PSB1094001-3	S CAPACITOR 800M 250V
1-4	PSB1094001-4	R CAPACITOR 100M 250V
1-5	PSB1094001-5	JUNCTION BOX
1-6	PSB1094001-6	CONTACT PLATE
1-7	PSB1094001-7	CENTRIFUGAL SWITCH
1-8	PSB1094001-8	FRONT MOTOR BEARING 6306Z
1-9	PSB1094001-9	REAR MOTOR BEARING 6305Z
1-10	PSB1094001-10	CAPACITOR COVER
2	PSB1094002	HEX NUT 3/8-16
3	PSB1094003	LOCK WASHER 3/8
4V2	PSB1094004V2	MOTOR CORD 8G 3W 38" V2.08.23
5	PSB1094005	KEY 8 X 8 X 25
6	PSB1094006	RUBBER GASKET
7	PSB1094007	EYE BOLT 3/4", 5/16-18 X 5/8
8	PSB1094008	FLANGE BOLT 5/16-18 X 3/4
9	PSB1094009	MOTOR PLATE
10	PSB1094010	HEX BOLT 3/8-16 X 1-1/2
11	PSB1094011	IMPELLER 15.6" ALUMINUM
12	PSB1094012	SET SCREW 3/8-16 X 3/4
13	PSB1094013	IMPELLER WASHER
14	PSB1094014	CAP SCREW M6-1 X 25
15	PSB1094015	MAIN HOUSING
16	PSB1094016	TAP SCREW #10 X 3/8
17	PSB1094017	WIRE CLIP UC4
18	PSB1094018	CAP SCREW M4-.7 X 60
19	PSB1094019	FILTER BRUSH MOTOR ASSEMBLY
19-1	PSB1094019-1	MOTOR 15W 220V 1-PH
19-2	PSB1094019-2	GEAR REDUCER LUYANG 3GN90(B1)
20	PSB1094020	MOTOR CORD 20G 4W 43"
21	PSB1094021	HEX NUT M5-.8
22	PSB1094022	SET SCREW M5-.8 X 12
23	PSB1094023	CANISTER MOUNTING PLATE
24	PSB1094024	FLANGE BOLT 5/16-18 X 1/2
25	PSB1094025	MUFFLER
26	PSB1094026	PHLP HD SCR M5-.8 X 6
27	PSB1094027	PHLP HD SCR M5-.8 X 8
28	PSB1094028	SELF-ALIGNING SPINDLE MOUNTING PLATE
29	PSB1094029	BALL BEARING 1206
30	PSB1094030	BEARING RETAINER
31A	PSB1094031A	CANISTER FILTER ASSEMBLY
31	PSB1094031	CANISTER FILTER
32	PSB1094032	FILTER BRUSH SPINDLE CAP
33	PSB1094033	STRAIN RELIEF TYPE-3 M16-2
34	PSB1094034	PHLP HD SCR 10-24 X 1/4
35	PSB1094035	SCRAPER
36	PSB1094036	FILTER BRUSH SPINDLE
37	PSB1094037	FLANGE BOLT M5-.8 X 12
38	PSB1094038	DRUM CASTER 2"
39	PSB1094039	FOAM TAPE 3/4"

REF	PART #	DESCRIPTION
40	PSB1094040	BAG CLAMP
41	PSB1094041	FILTER COLLECTION BAG (PLASTIC)
42	PSB1094042	WRENCH 10 X 12MM OPEN-ENDS
43	PSB1094043	QUICK CONNECTOR
44	PSB1094044	FENDER WASHER 3/8
45V2	PSB1094045V2	DRUM LID V2.12.21
46	PSB1094046	FILTER BRUSH MOTOR SHAFT
47	PSB1094047	SCRAPER MOUNT
48	PSB1094048	EXT TOOTH WASHER 5MM
49	PSB1094049	HOSE CLAMP 2"
50	PSB1094050	FLEXIBLE HOSE 2"
51V2	PSB1094051V2	CYCLONE FUNNEL V2.12.21
52	PSB1094052	HEX BOLT 1/4-20 X 2-1/2
53	PSB1094053	CONE CLAMP
54	PSB1094054	INTAKE HOUSING
55	PSB1094055	CHAIN
56	PSB1094056	INLET CAP 4"
57	PSB1094057	INLET ADAPTER 10" X 4" X 4
58V2	PSB1094058V2	POWER CORD 8G 3W 125" V2.08.23
59	PSB1094059	PHLP HD SCR 10-24 X 1/4
60	PSB1094060	FLAT HD SCR 1/4-20 X 1/2
61	PSB1094061	SWITCH BOX MOUNTING PLATE
62	PSB1094062	STRAIN RELIEF TYPE-3 M16-2
63	PSB1094063	STRAIN RELIEF TYPE-3 M25-3
64V2	PSB1094064V2	MAGNETIC SWITCH V2.08.23
65	PSB1094065	LEFT DRUM BRACKET
66	PSB1094066	FLANGE NUT M5-.8
67	PSB1094067	HANDLE BRACKET
68	PSB1094068	RIGHT SIDE PANEL
69	PSB1094069	RIGHT DRUM BRACKET
70	PSB1094070	CLEAR TUBE 6 X 360MM
71	PSB1094071	VACUUM PRESSURE GAUGE
72	PSB1094072	FLANGE BOLT 1/4-20 X 1/2
73	PSB1094073	PHLP HD SCR 10-24 X 1/2
74	PSB1094074	VACUUM GAUGE MOUNT
75	PSB1094075	LEFT SIDE PANEL
76	PSB1094076	DRUM COLLECTION BAG (PLASTIC)
77	PSB1094077	DRUM LOCK HANDLE
78	PSB1094078	LOCK NUT M10-1.5
79	PSB1094079	SUPPORT PANEL
80	PSB1094080	BASE
81	PSB1094081	LOCKING CASTER 3"
82	PSB1094082	CASTER 3"
83	PSB1094083	DRUM HANDLE
84	PSB1094084	WINDOW SEAL
85	PSB1094085	RIVET 9 X 3 BLIND
86	PSB1094086	DRUM WINDOW
87	PSB1094087	UPPER COLLECTION DRUM
88	PSB1094088	DRUM CLAMP
89	PSB1094089	LOWER COLLECTION DRUM
90	PSB1094090	REMOTE CONTROL
91	PSB1094091	FLANGE BOLT 5/16-18 X 3/8

Machine Labels



REF	PART #	DESCRIPTION
101	PSB1092101	DUST COLLECTOR COMBO LABEL (SB1092)
101	PSB1094101	DUST COLLECTOR COMBO LABEL (SB1094)
102	PSB1092102	ELECTRICITY LABEL 1.4W X 1.2H
103	PSB1092103	VACUUM PRESSURE GAUGE LABEL
104	PSB1092104	SOUTH BEND REMOTE LABEL
105	PSB1092105	SOUTH BEND NAMEPLATE 90MM (SB1092)

REF	PART #	DESCRIPTION
105	PSB1094105	SOUTH BEND NAMEPLATE 125MM (SB1094)
106	PSB1092106	MACHINE ID LABEL (SB1092)
106	PSB1094106	MACHINE ID LABEL (SB1094)
107	PSB1092107	MODEL NUMBER LABEL (SB1092)
107	PSB1094107	MODEL NUMBER LABEL (SB1094)

⚠WARNING

The safety labels provided with your machine are used to make the operator aware of the machine hazards and ways to prevent injury. The owner of this machine MUST maintain the original location and readability of these safety labels. If any label is removed or becomes unreadable, REPLACE that label before using the machine again. Contact South Bend Tools at (360) 734-1540 or www.southbendtools.com to order new labels.