Headstock 1

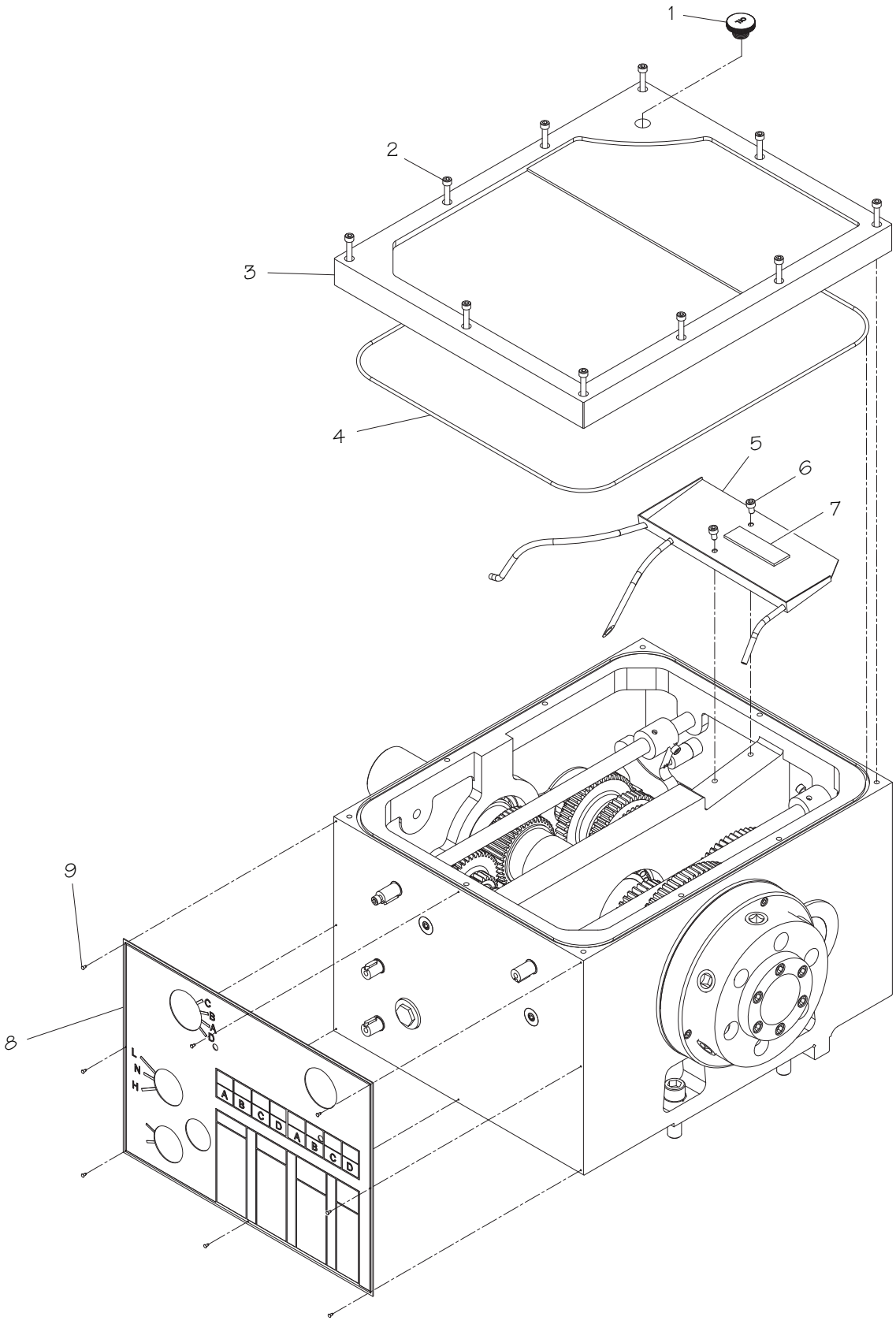

Headstock 2

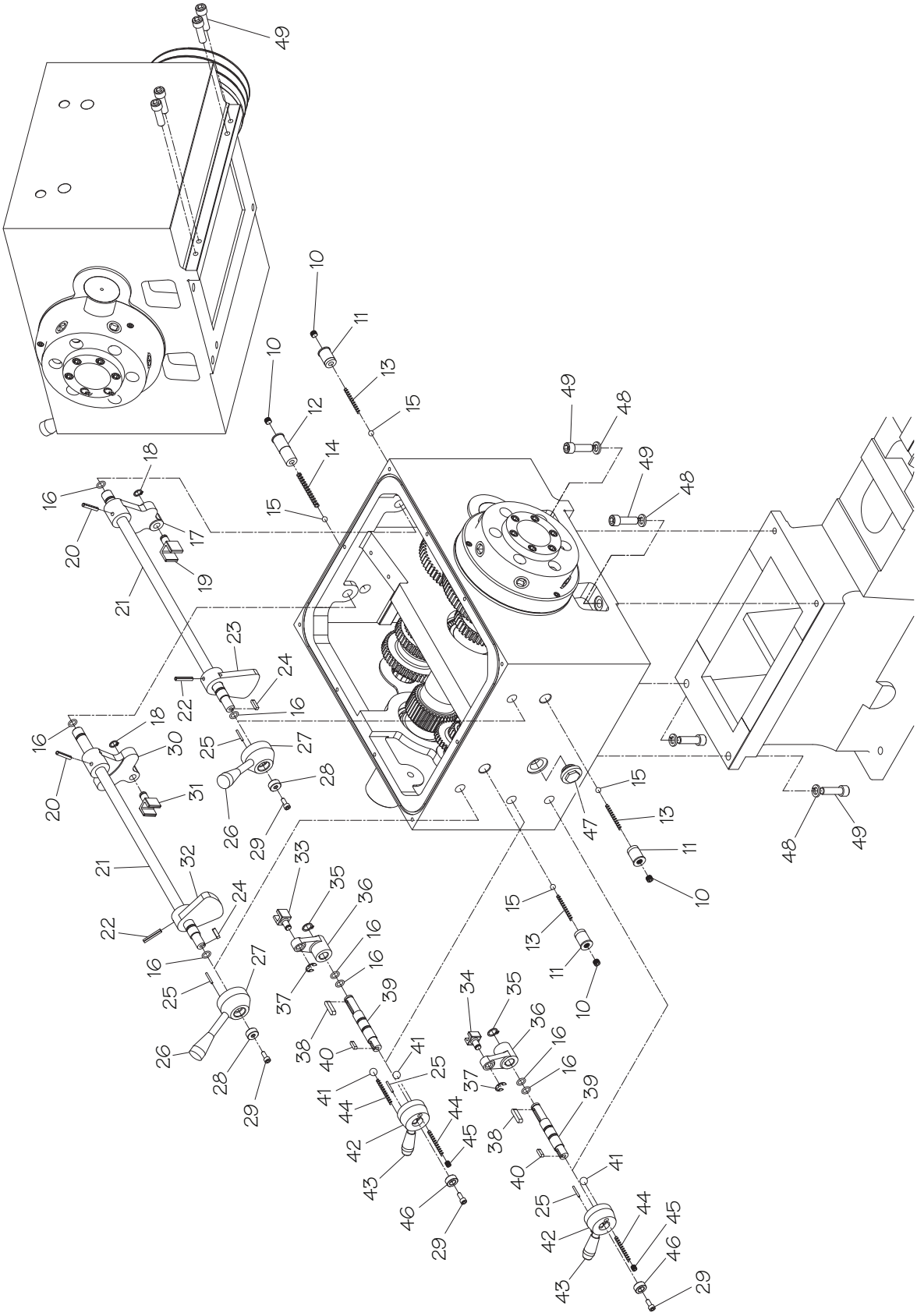

Headstock 3

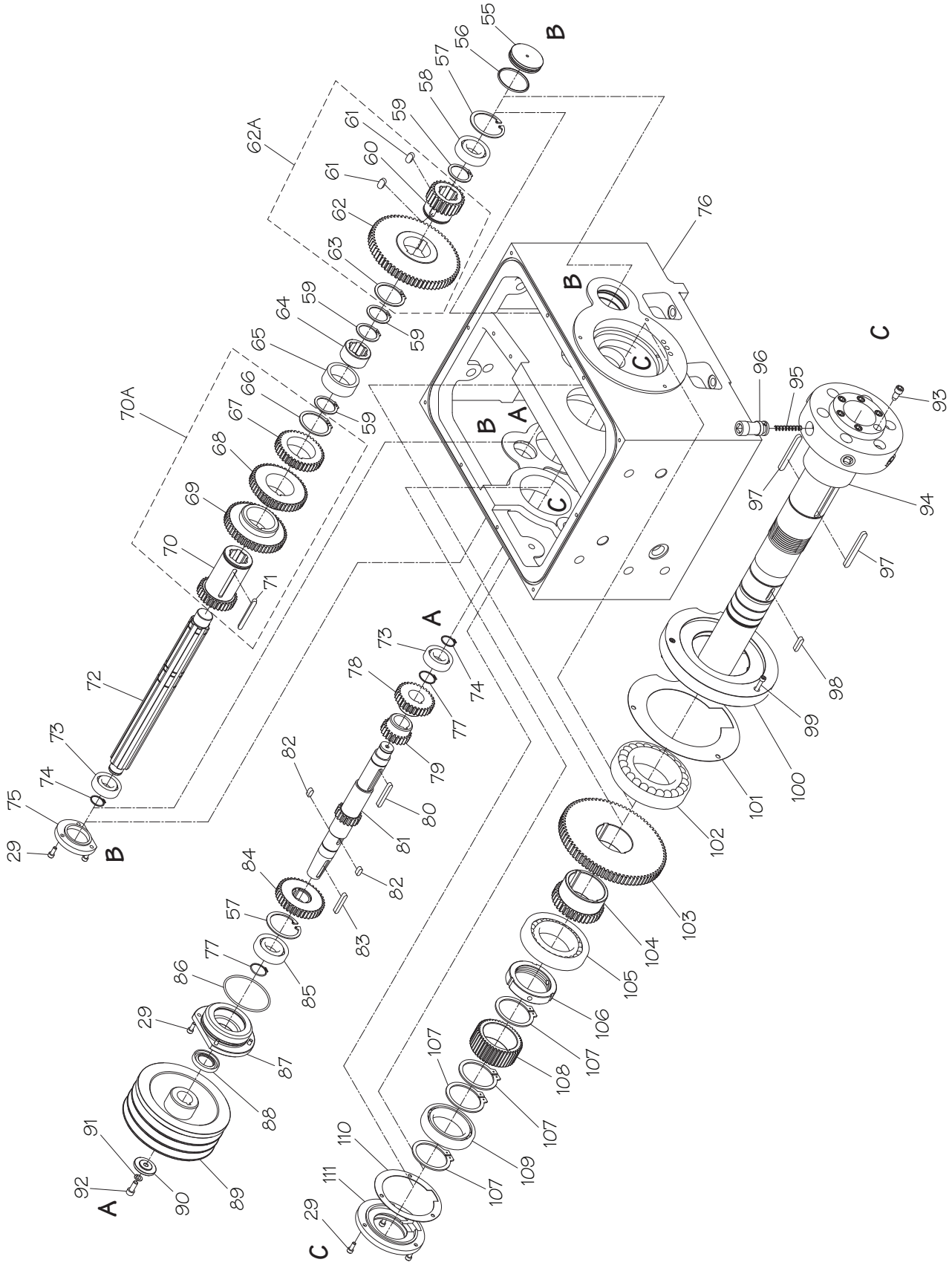
55
56
57
58
59
61
60
62
62A
63
64
65
66
67
68
69
70
70A
71
72
73
74
75
29
76
A
B
C
96
95
93
94
97
98
99
100
101
102
103
104
105
106
107
108
109
110
111
82
83
84
85
86
87
88
89
90
91
92
77
78
79
80
81

Headstock 4

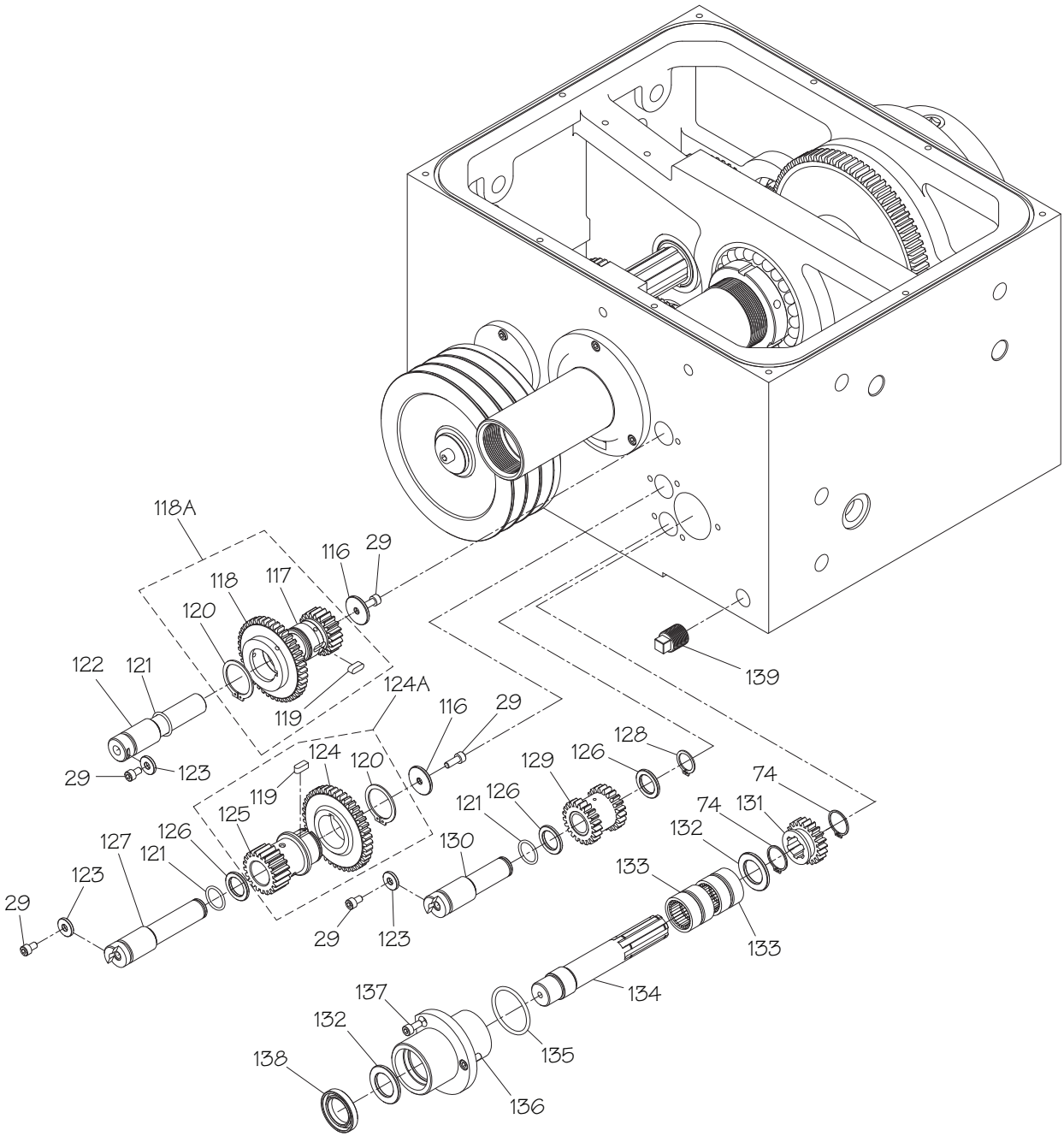
118A
116
29
118
117
120
122
121
124A
119
116
29
29
123
124
120
119
125
126
127
121
123
29
129
126
128
121
126
130
29
123
74
74
131
132
133
133
134
137
132
135
138
136
139

Headstock Parts List

REF	PART #	DESCRIPTION
1	PSB10530001	OIL FILL CAP
2	PCAP194M	CAP SCREW M6-1 X 40 CHROME
3	PSB10530003	HEADSTOCK COVER
4	PSB10530004	HEADSTOCK COVER SEAL
5	PSB10530005	HEADSTOCK CATCH TRAY
6	PCAP04M	CAP SCREW M6-1 X 10
7	PSB10530007	MAGNET
8	PSB10530008	HEADSTOCK FRONT PANEL
9	PRIV001M	STEEL FLUTED RIVET 2 X 5MM
10	PSS30M	SET SCREW M10-1.5 X 10
11	PSB10530011	THREADED INSERT M10-1.5
12	PSB10530012	THREADED INSERT M10-1.5
13	PSB10530013	COMPRESSION SPRING 8 X 37MM
14	PSB10530014	COMPRESSION SPRING 8 X 52.5MM
15	PSTB001M	STEEL BALL 8.5MM
16	PORP016	O-RING 15.8 X 2.4 P16
17	PSB10530017	SHIFT ROCKER ARM
18	PR03M	EXT RETAINING RING 12MM
19	PSB10530019	SHIFT FORK
20	PRP31M	ROLL PIN 6 X 36
21	PSB10530021	SHIFT ROD
22	PRP32M	ROLL PIN 6 X 40
23	PSB10530023	SHIFT ROD BRACKET
24	PK01M	KEY 5 X 5 X 22
25	PRP105M	ROLL PIN 3 X 24
26	PSB10530026	SHIFT LEVER
27	PSB10530027	SHIFT LEVER HUB
28	PSB10530028	HUB RETAINING WASHER
29	PCAP01M	CAP SCREW M6-1 X 16
30	PSB10530030	SHIFT ROCKER ARM
31	PSB10530031	SHIFT FORK
32	PSB10530032	SHIFT ROD BRACKET
33	PSB10530033	SHIFT FORK
34	PSB10530034	SHIFT FORK
35	PR05M	EXT RETAINING RING 15MM
36	PSB10530036	SHIFT ROCKER ARM
37	PEC015M	E-CLIP 8MM
38	PK12M	KEY 5 X 5 X 30
39	PSB10530039	SHIFT ROD
40	PK164M	KEY 5 X 5 X 17
41	PSTB001	STEEL BALL 1/4
42	PSB10530042	SHIFT HUB
43	PSB10530043	SHIFT LEVER
44	PSB10530044	COMPRESSION SPRING 6 X 27.5MM
45	PSS20M	SET SCREW M8-1.25 X 8
46	PSB10530046	HUB RETAINING WASHER

REF	PART #	DESCRIPTION
47	PSB10530047	OIL SIGHT GLASS 3/4"
48	PLW05M	LOCK WASHER 12MM
49	PCAP92M	CAP SCREW M12-1.75 X 40
55	PSB10530055	HOUSING PLUG
56	PORG050	O-RING 54.4 X 3.1 G50
57	PR38M	INT RETAINING RING 62MM
58	P6206-OPEN	BALL BEARING 6206 OPEN
59	PR31M	EXT RETAINING RING 38MM
60	PSB10530062A	GEAR 24T
61	PK175M	KEY 10 X 6 X 20
62A	PSB10530062A	GEAR ASSEMBLY 24/67T
62	PSB10530062A	GEAR 67T
63	PR76M	EXT RETAINING RING 52MM
64	PSB10530064	GEAR COLLAR
65	PSB10530065	BUSHING
66	PR78M	EXT RETAINING RING 55MM
67	PSB10530070A	GEAR 38T
68	PSB10530070A	GEAR 46T
69	PSB10530070A	GEAR 50T
70A	PSB10530070A	GEAR ASSEMBLY 38/46/50/30T
70	PSB10530070A	GEAR 30T
71	PK176M	KEY 7 X 7 X 70
72	PSB10530072	DRIVE SHAFT
73	P6205-OPEN	BALL BEARING 6205 OPEN
74	PR11M	EXT RETAINING RING 25MM
75	PSB10530075	BEARING SEAT
76	PSB10530076	HEADSTOCK HOUSING (SB1053)
76	PSB1054F0076	HEADSTOCK HOUSING (SB1054F)
76	PSB1054F0076	HEADSTOCK HOUSING (SB1055F)
77	PR15M	EXT RETAINING RING 30MM
78	PSB10530078	GEAR 30T
79	PSB10530079	GEAR 22T
80	PK66M	KEY 7 X 7 X 55
81	PSB10530081	GEAR SHAFT 18T
82	PK177M	KEY 7 X 7 X 16
83	PK62M	KEY 7 X 7 X 45
84	PSB10530084	GEAR 38T
85	P6206-2RS	BALL BEARING 6206-2RS
86	PORG085	O-RING 84.4 X 3.1 G85
87	PSB10530087	FLANGED BEARING
88	PSB10530088	OIL SEAL 305008
89	PSB10530089	SPINDLE PULLEY
90	PSB10530090	PULLEY RETAINING WASHER
91	PLW04M	LOCK WASHER 8MM
92	PCAP31M	CAP SCREW M8-1.25 X 25
93	PSB10530093	SPINDLE NOSE STEP BOLT

Headstock Parts List

REF	PART #	DESCRIPTION
94	PSB10530094	SPINDLE D1-6 MT#6
95	PSB10530095	CAMLOCK SPRING
96	PSB10530096	CAMLOCK
97	PK162M	KEY 10 X 6 X 85
98	PK28M	KEY 7 X 7 X 30
99	PCAP48M	CAP SCREW M6-1 X 35
100	PSB10530100	SPINDLE BEARING FRONT COVER
101	PSB10530101	FRONT BEARING COVER GASKET
102	P32019-T	TAPERED BEARING 32019 NTN
103	PSB10530103	GEAR 79T
104	PSB10530104	GEAR 36T
105	P30214-T	TAPERED BEARING 30214 NTN
106	PSB10530106	SPANNER NUT YSR70
107	PR13M	EXT RETAINING RING 65MM
108	PSB10530108	GEAR 42T
109	P6013-OPEN	BALL BEARING 6013 OPEN
110	PSB10530110	REAR SPINDLE COVER GASKET
111	PSB10530111	REAR SPINDLE COVER
116	PSB10530116	GEAR FLAT WASHER
117	PSB10530118A	GEAR 21T
118A	PSB10530118A	GEAR ASSEMBLY 21/42T
118	PSB10530118A	GEAR 42T

REF	PART #	DESCRIPTION
119	PK144M	KEY 6 X 6 X 16
120	PR12M	EXT RETAINING RING 35MM
121	PORP021	O-RING 20.8 X 2.4 P21
122	PSB10530122	GEAR SHAFT
123	PSB10530123	SHAFT FLAT WASHER
124A	PSB10530124A	GEAR ASSEMBLY 21/42T
124	PSB10530124A	GEAR 42T
125	PSB10530124A	GEAR 21T
126	PSB10530126	THRUST WASHER
127	PSB10530127	GEAR SHAFT
128	PR09M	EXT RETAINING RING 20MM
129	PSB10530129	GEAR 21T
130	PSB10530130	GEAR SHAFT
131	PSB10530131	GEAR 21T
132	PSB10530132	THRUST WASHER
133	PSB10530133	NEEDLE BEARING RNA 6904
134	PSB10530134	GEAR SHAFT
135	PORP044	O-RING 43.7 X 3.5 P44
136	PSB10530136	FLANGED BEARING
137	PCAP26M	CAP SCREW M6-1 X 12
138	PSB10530138	OIL SEAL 28 X 44 X 7MM
139	PSB10530139	OIL PLUG 1/2" NPT

Gearbox 1

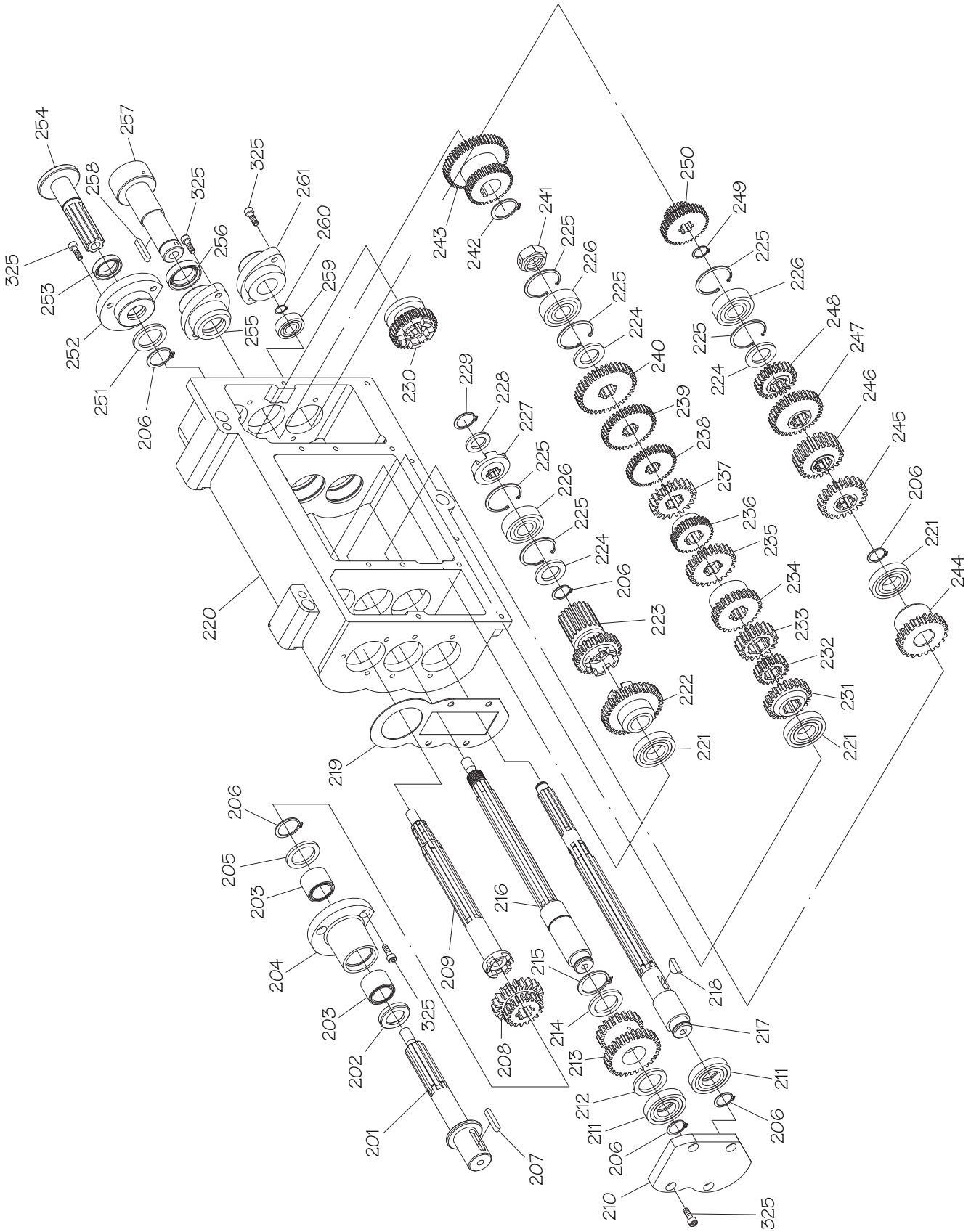
254
257
258
325
261
260
259
256
255
253
252
251
206
230
243
242
241
225
226
224
240
239
238
237
236
235
234
233
232
231
221
250
249
248
247
246
245
244
229
228
227
220
223
222
219
205
203
204
202
201
207
209
208
216
215
214
213
212
211
210
218
217

Gearbox 2

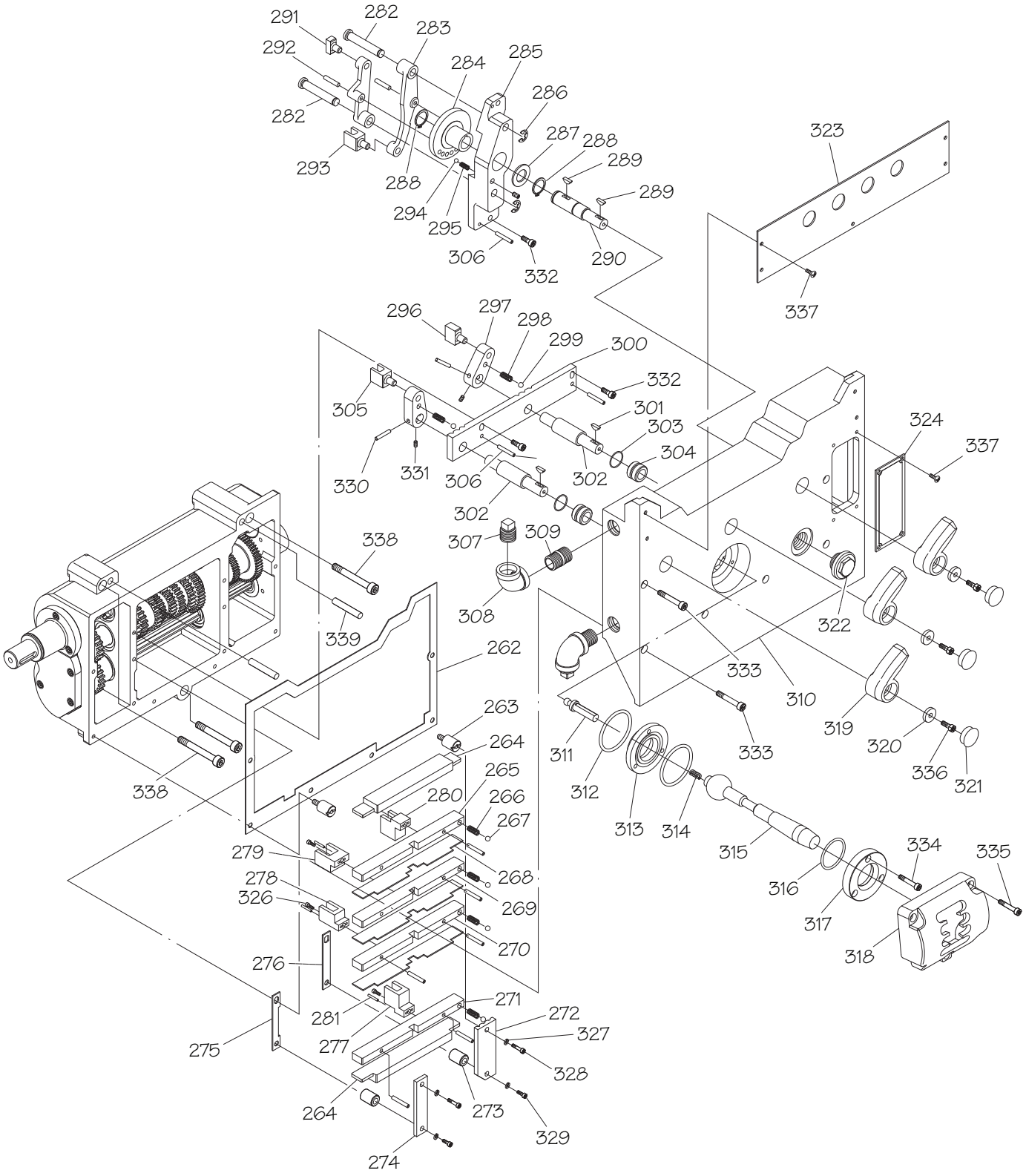
291
282
283
292
284
285
286
282
287
288
289
293
288
289
294
295
306
332
290
323
337
296
297
298
299
300
332
305
301
303
304
324
337
330
331
306
302
302
307
309
338
308
339
322
262
333
310
263
319
264
311
333
320
265
336
321
338
280
266
312
267
313
314
279
315
334
335
278
268
316
326
269
317
270
318
276
271
281
272
327
275
277
328
264
273
329
274

Gearbox Parts List

REF	PART #	DESCRIPTION
201	PSB10530201	GEAR SHAFT
202	PSB10530202	OIL SEAL 20 X 32 X 5MM
203	PSB10530203	NEEDLE BEARING TAF 202820
204	PSB10530204	FLANGED BEARING
205	PSB10530205	THRUST WASHER
206	PR09M	EXT RETAINING RING 20MM
207	PK109M	KEY 7 X 7 X 35
208	PSB10530208	GEAR 19/20T
209	PSB10530209	GEAR SHAFT
210	PSB10530210	END GEAR COVER
211	P16004	BALL BEARING 16004-OPEN
212	PSB10530212	THRUST WASHER
213	PSB10530213	GEAR 19/30T
214	PSB10530214	THRUST WASHER
215	PR11M	EXT RETAINING RING 25MM
216	PSB10530216	GEAR SHAFT
217	PSB10530217	GEAR SHAFT
218	PSB10530218	WOODRUFF KEY 5 X 19
219	PSB10530219	END GEAR COVER GASKET
220	PSB10530220	GEARBOX HOUSING
221	P16004	BALL BEARING 16004-OPEN
222	PSB10530222	GEAR 38T
223	PSB10530223	GEAR 23/19T
224	PSB10530224	THRUST WASHER
225	PR23M	INT RETAINING RING 40MM
226	P6203-OPEN	BALL BEARING 6203 OPEN
227	PSB10530227	CLUTCH
228	PSB10530228	THRUST WASHER
229	PR06M	EXT RETAINING RING 16MM
230	PSB10530230	GEAR 35T
231	PSB10530231	GEAR 22T
232	PSB10530232	GEAR 19T
233	PSB10530233	GEAR 20T
234	PSB10530234	GEAR 24T
235	PSB10530235	GEAR 23T
236	PSB10530236	GEAR 27T
237	PSB10530237	GEAR 24T
238	PSB10530238	GEAR 28T
239	PSB10530239	GEAR 26T
240	PSB10530240	GEAR 38T
241	PSB10530241	LOCK COLLAR
242	PR10M	EXT RETAINING RING 22MM
243	PSB10530243	GEAR 36/50T
244	PSB10530244	GEAR 22T
245	PSB10530245	GEAR 22T
246	PSB10530246	GEAR 22T

REF	PART #	DESCRIPTION
247	PSB10530247	GEAR 33T
248	PSB10530248	GEAR 22T
249	PR18M	EXT RETAINING RING 17MM
250	PSB10530250	GEAR 20/36T
251	PSB10530251	THRUST WASHER
252	PSB10530252	FLANGED BEARING
253	PSB10530253	OIL SEAL 20 X 32 X 5MM
254	PSB10530254	GEAR SHAFT
255	PSB10530255	FLANGED BEARING
256	PSB10530256	OIL SEAL 24 X 35 X 8MM
257	PSB10530257	SHAFT
258	PK15M	KEY 5 X 5 X 35
259	P6001-OPEN	BALL BEARING 6001 OPEN
260	PR03M	EXT RETAINING RING 12MM
261	PSB10530261	FLANGED BEARING
262	PSB10530262	GEARBOX HOUSING GASKET
263	PSB10530263	SHIFT SUPPORT STEP BOLT
264	PSB10530264	SHIFT PLATE
265	PSB10530265	UPPER SHIFT SUPPORT
266	PSB10530266	COMPRESSION SPRING 4 X 19
267	PSTB001	STEEL BALL 1/4
268	PSB10530268	SHIFT SUPPORT PARTITION
269	PSB10530269	UPPER MIDDLE SHIFT SUPPORT
270	PSB10530270	LOWER MIDDLE SHIFT SUPPORT
271	PSB10530271	LOWER SHIFT SUPPORT
272	PSB10530272	REVERSE/STOP PLATE
273	PSB10530273	SPACER
274	PSB10530274	SHOULDER PLATE
275	PSB10530275	INDENTED CONNECTING PLATE
276	PSB10530276	CONNECTING PLATE
277	PSB10530277	SHIFT FORK
278	PSB10530278	LOWER MIDDLE SHIFT FORK
279	PSB10530279	UPPER MIDDLE SHIFT FORK
280	PSB10530277	SHIFT FORK
281	PRP02M	ROLL PIN 3 X 16
282	PSB10530282	CAPTIVE PIN
283	PSB10530283	ROCKER ARM
284	PSB10530284	CAM
285	PSB10530285	CAM BRACKET
286	PEC015M	E-CLIP 8MM
287	PSB10530287	THRUST WASHER
288	PR18M	EXT RETAINING RING 17MM
289	PSB10530289	WOODRUFF KEY 4 X 13
290	PSB10530290	SHAFT
291	PSB10530291	SHIFT TAB
292	PSB10530292	DOWEL PIN 5MM

Gearbox Parts List

REF	PART #	DESCRIPTION
293	PSB10530293	SHIFT FORK
294	PSTB001	STEEL BALL 1/4
295	PSB10530295	COMPRESSION SPRING 6.35 X 18
296	PSB10530296	SHIFT TAB
297	PSB10530297	PIVOT ARM
298	PSB10530298	COMPRESSION SPRING 6 X 13
299	PSTB001	STEEL BALL 1/4
300	PSB10530300	SELECTOR BAR
301	PSB10530289	WOODRUFF KEY 4 X 13
302	PSB10530302	SELECTOR SHAFT
303	PORP018	O-RING 17.8 X 2.4 P18
304	PSB10530304	BUSHING
305	PSB10530305	SHIFT FORK
306	PRP24M	ROLL PIN 5 X 16
307	PSB10530139	OIL PLUG 1/2" NPT
308	PSB10530308	PIPE ELBOW 1/2" NPT
309	PSB10530309	PIPE NIPPLE 1/2" X 1" NPT
310	PSB10530310	GEARBOX FRONT COVER
311	PSB10530311	SELECTOR PIN
312	PORG040	O-RING 39.4 X 3.1 G40
313	PSB10530313	SHIFT ROD BRACKET
314	PSB10530314	COMPRESSION SPRING 9 X 38
315	PSB10530315	SHIFT ROD
316	PORG030	O-RING 3.1 X 29.4 G30

REF	PART #	DESCRIPTION
317	PSB10530317	END CAP
318	PSB10530318	SHIFT ROD PLATE
319	PSB10530319	SHIFT LEVER
320	PSB10530320	LEVER FLAT WASHER
321	PSB10530321	LEVER END PLUG
322	PSB10530047	OIL SIGHT GLASS 3/4"
323	PSB10530323	SHIFT LEVER PLATE
324	PSB10530324	COVER PLATE
325	PCAP26M	CAP SCREW M6-1 X 12
326	PCAP15M	CAP SCREW M5-.8 X 20
327	PLW03M	LOCK WASHER 6MM
328	PCAP26M	CAP SCREW M6-1 X 12
329	PCAP48M	CAP SCREW M6-1 X 35
330	PRP04M	ROLL PIN 4 X 24
331	PSS03M	SET SCREW M6-1 X 8
332	PCAP02M	CAP SCREW M6-1 X 20
333	PCAP167M	CAP SCREW M6-1 X 70
334	PCAP38M	CAP SCREW M5-.8 X 25
335	PCAP26M	CAP SCREW M6-1 X 12
336	PCAP33M	CAP SCREW M5-.8 X 12
337	PS17M	PHLP HD SCR M4-.7 X 6
338	PCAP66M	CAP SCREW M8-1.25 X 65
339	PSB10530339	TAPER PIN #7 X 3-1/2

Apron 1

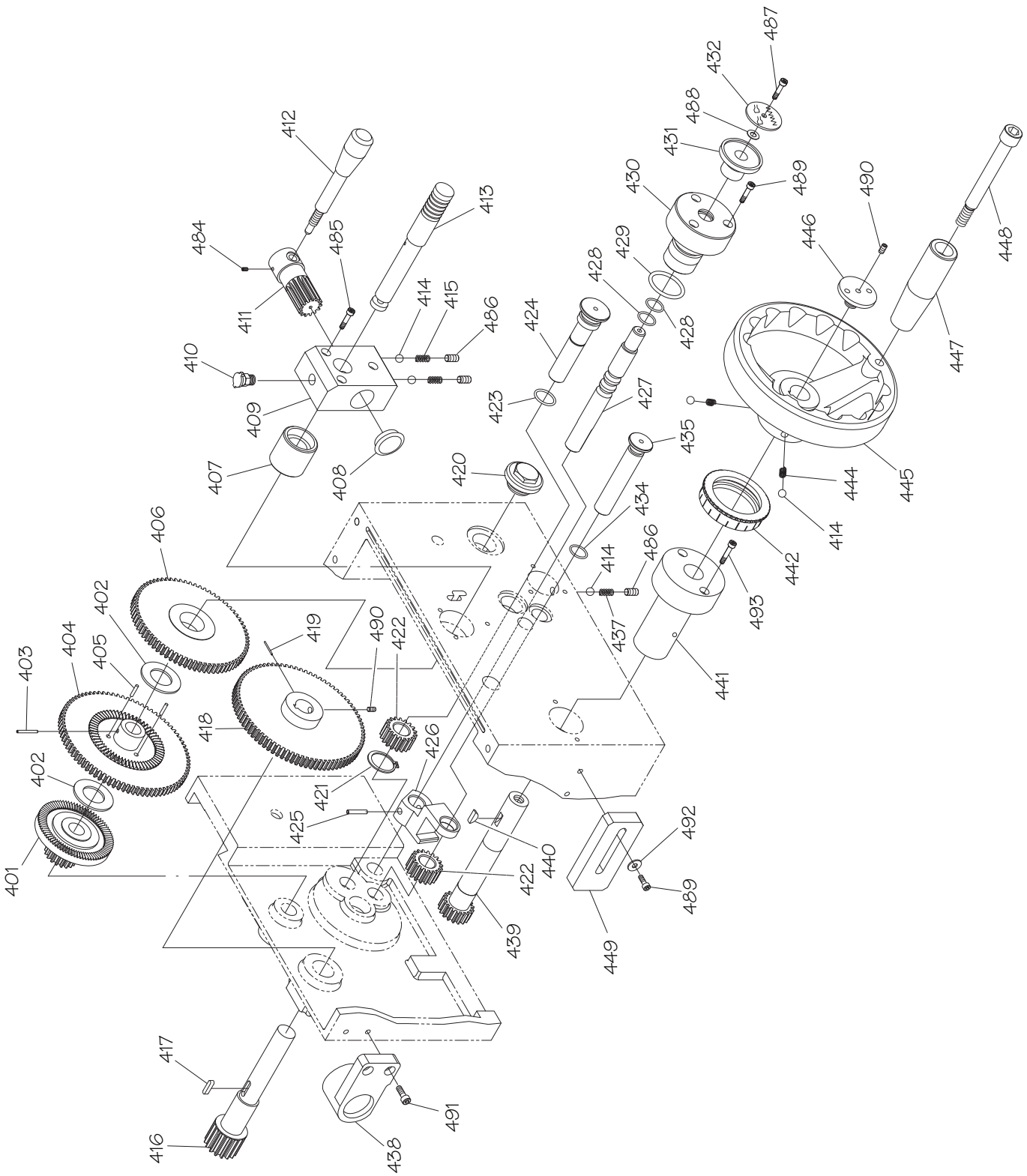
401
402
403
404
405
406
407
408
409
410
411
412
413
414
415
416
417
418
419
420
421
422
423
424
425
426
427
428
429
430
431
432
434
435
437
438
439
440
441
442
444
445
446
447
448
449
484
485
486
487
488
489
490
491
492
493

Apron 2

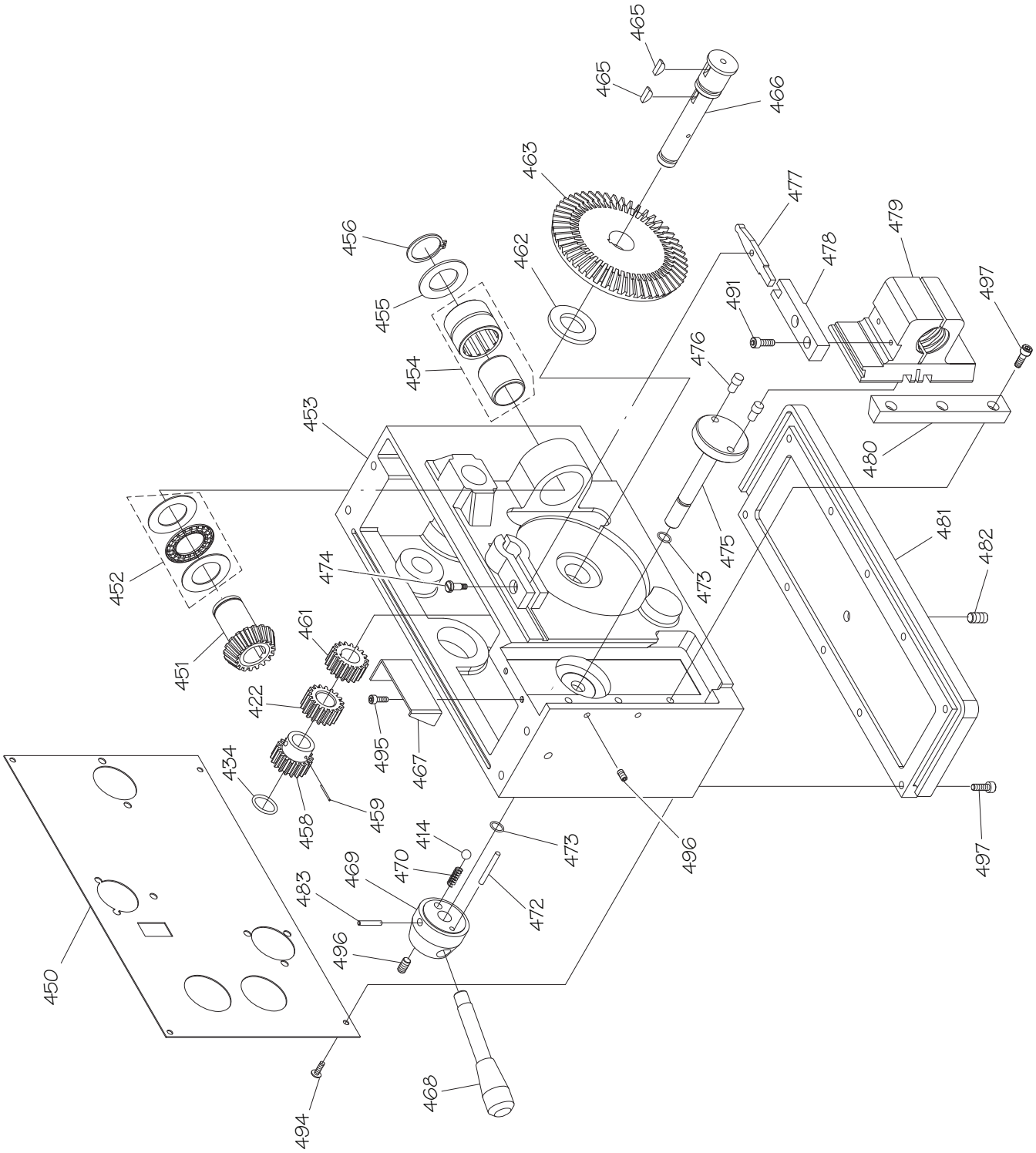
465
465
466
463
477
456
462
478
479
455
491
497
454
476
453
480
452
474
473
475
481
482
451
461
422
495
467
434
459
458
414
473
496
497
469
470
483
472
496
450
468
494

Apron Parts List

REF	PART #	DESCRIPTION
401	PSB10530401	GEAR 18/60T
402	PSB10530402	THRUST BEARING AS3047
403	PRP20M	ROLL PIN 4 X 22
404	PSB10530404	GEAR 81/60T
405	PSB10530405	DOWEL PIN 4 X 17
406	PSB10530406	GEAR 72/60T
407	PSB10530407	BUSHING
408	PSB10530408	HOUSING PLUG
409	PSB10530409	GEAR HOUSING
410	PSB10530410	OIL CAP
411	PSB10530411	BULL GEAR SHAFT
412	PSB10530412	HALF NUT LEVER
413	PSB10530413	PINION
414	PSTB001	STEEL BALL 1/4
415	PSB10530298	COMPRESSION SPRING 6 X 13
416	PSB10530416	GEAR SHAFT 16T
417	PK14M	KEY 5 X 5 X 18
418	PSB10530418	GEAR 81T
419	PRP10M	ROLL PIN 5 X 36
420	PSB10530047	OIL SIGHT GLASS 3/4"
421	PR06M	EXT RETAINING RING 16MM
422	PSB10530422	GEAR 18T
423	PORP018	O-RING 17.8 X 2.4 P18
424	PSB10530424	GEAR SHAFT
425	PRP04M	ROLL PIN 4 X 24
426	PSB10530426	FEED SELECTION FORK
427	PSB10530427	FEED SELECTION SHAFT
428	PORP016	O-RING 15.8 X 2.4 P16
429	PORP026	O-RING 25.7 X 3.5 P26
430	PSB10530430	KNOB HUB
431	PSB10530431	FEED SELECTION KNOB
432	PSB10530432	FEED SELECTION PLATE
434	PORP012	O-RING 11.8 X 2.4 P12
435	PSB10530435	GEAR SHAFT
437	PSB10530437	COMPRESSION SPRING 4 X 19
438	PSB10530438	LEADSCREW BRACKET
439	PSB10530439	GEAR SHAFT 18T
440	PSB10530218	WOODRUFF KEY 5 X 19
441	PSB10530441	HANDWHEEL HUB
442	PSB10530442	CARRIAGE GRADUATED DIAL
444	PSB10530444	COMPRESSION SPRING
445	PSB10530445	CARRIAGE HANDWHEEL
446	PSB10530446	HANDWHEEL END PLATE
447	PSB10530447	HANDWHEEL HANDLE
448	PSB10530448	HANDWHEEL HANDLE CAP SCREW

REF	PART #	DESCRIPTION
449	PSB10530449	CARRIAGE STOP PLATE
450	PSB10530450	FRONT APRON PANEL
451	PSB10530451	BEVEL GEAR 23T
452	PSB10530452	THRUST BEARING NTB/AS-2542
453	PSB10530453	APRON HOUSING
454	PSB10530454	NEEDLE BEARING NK29/30
455	PSB10530455	THRUST WASHER
456	PR11M	EXT RETAINING RING 25MM
458	PSB10530458	GEAR 18T
459	PRP88M	ROLL PIN 5 X 22
461	PSB10530461	GEAR 18T
462	PSB10530462	THRUST WASHER
463	PSB10530463	BEVEL GEAR 64T
465	PSB10530289	WOODRUFF KEY 4 X 13
466	PSB10530466	GEAR SHAFT
467	PSB10530467	OIL FENCE
468	PSB10530468	FEED DIRECTION LEVER
469	PSB10530469	FEED DIRECTION LEVER HUB
470	PSB10530470	COMPRESSION SPRING 6 X 27
472	PRP04M	ROLL PIN 4 X 24
473	PORP020	O-RING 19.8 X 2.4 P20
474	PSB10530474	CLAMP STEP SCREW
475	PSB10530475	HALF NUT SHAFT
476	PSB10530476	SHAFT STEP PIN
477	PSB10530477	PIVOT ARM
478	PSB10530478	PIVOT BRACKET
479	PSB10530479	HALF NUT
480	PSB10530480	HALF NUT GIB
481	PSB10530481	BOTTOM APRON COVER
482	PSB10530482	OIL DRAIN PLUG 1/8"
483	PRP102M	ROLL PIN 4 X 36
484	PSS02M	SET SCREW M6-1 X 6
485	PCAP79M	CAP SCREW M5-.8 X 35
486	PSS20M	SET SCREW M8-1.25 X 8
487	PS08M	PHLP HD SCR M5-.8 X 12
488	PW03M	FLAT WASHER 6MM
489	PCAP38M	CAP SCREW M5-.8 X 25
490	PSS12M	SET SCREW M6-1 X 25
491	PCAP194M	CAP SCREW M6-1 X 16 CHROME
492	PW03M	FLAT WASHER 6MM
493	PCAP38M	CAP SCREW M5-.8 X 25
494	PS17M	PHLP HD SCR M4-.7 X 6
495	PCAP03M	CAP SCREW M5-.8 X 8
496	PSS02M	SET SCREW M6-1 X 6
497	PCAP24M	CAP SCREW M5-.8 X 16

End Gears

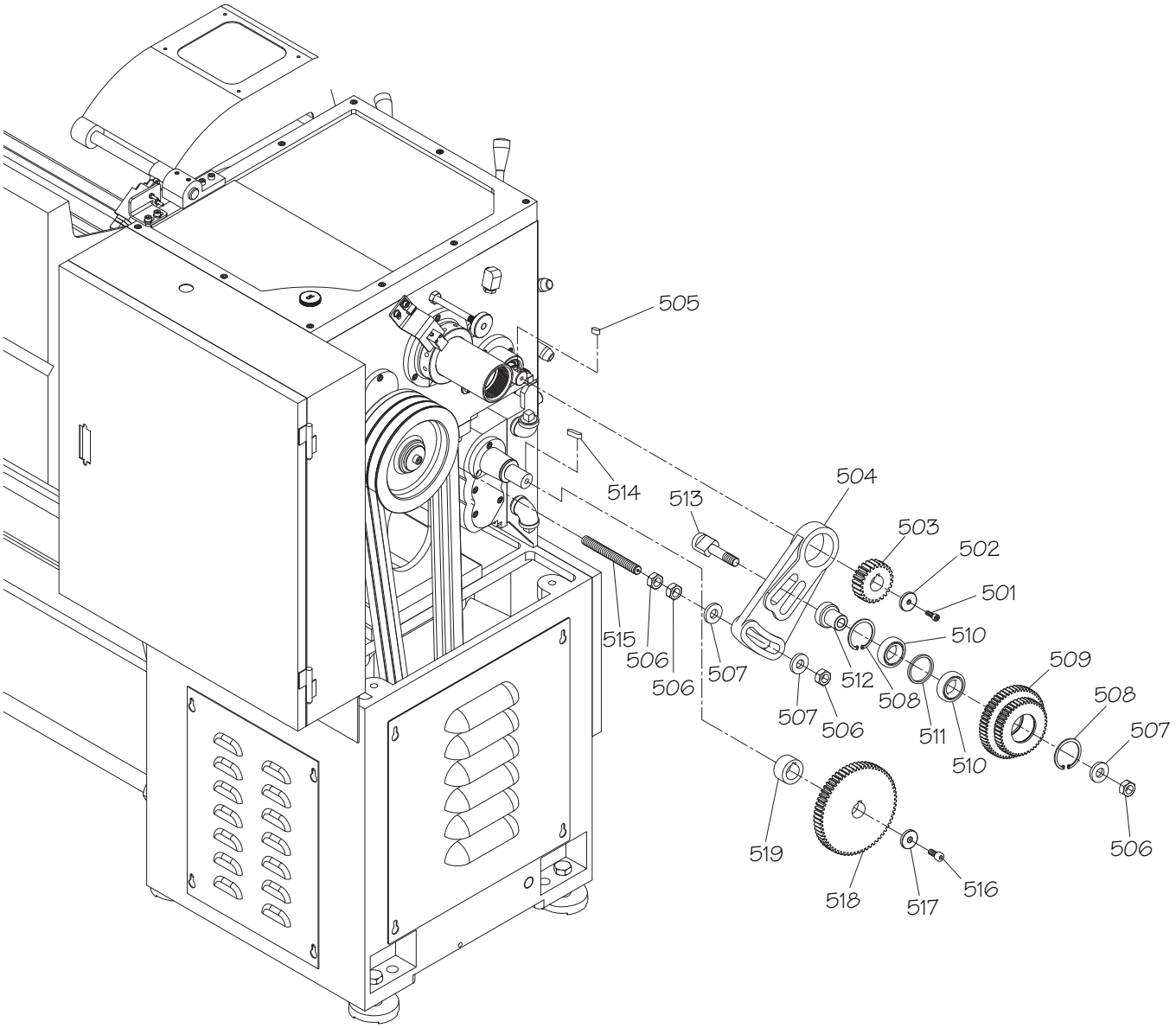

REF	PART #	DESCRIPTION
501	PCAP02M	CAP SCREW M6-1 X 20
502	PSB10530502	GEAR FLAT WASHER
503	PSB10530503	GEAR 24T
504	PSB10530504	PIVOT ARM
505	PK166M	KEY 7 X 7 X 15
506	PN32M	HEX NUT M14-2
507	PSB10530507	GEAR FLAT WASHER
508	PR25M	INT RETAINING RING 47MM
509	PSB10530509	GEAR 44/56T
510	P6005ZZ	BALL BEARING 6005ZZ

REF	PART #	DESCRIPTION
511	PSB10530511	THRUST WASHER
512	PSB10530512	SHAFT COLLAR
513	PSB10530513	GEAR SHAFT
514	PK28M	KEY 7 X 7 X 30
515	PSB10530515	STUD-FT M14-2 X 120
516	PCAP14M	CAP SCREW M8-1.25 X 20
517	PSB10530517	GEAR FLAT WASHER
518	PSB10530518	GEAR 57T
519	PSB10530519	BUSHING

Spindle Motor Assembly

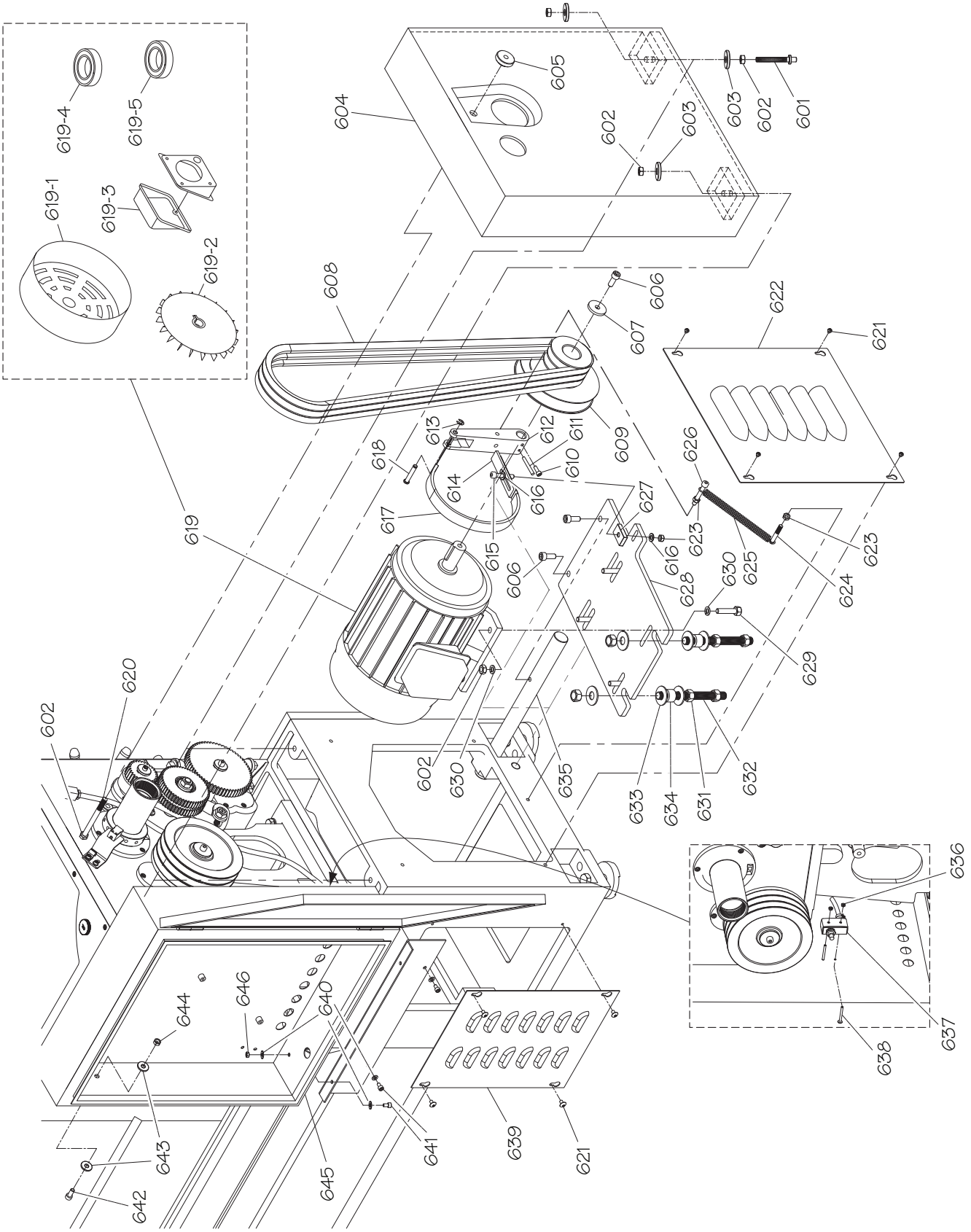

Spindle Motor Assembly Parts List

REF	PART #	DESCRIPTION
601	PSB10530601	END GEAR COVER ALIGNMENT PIN
602	PN02M	HEX NUT M10-1.5
603	PW04M	FLAT WASHER 10MM
604	PSB10530604	END GEAR COVER
605	PSB10530605	KNURLED END GEAR COVER NUT
606	PCAP64M	CAP SCREW M10-1.5 X 25
607	PSB10530607	PULLEY FLAT WASHER
608	PVB69	V-BELT B69
609	PSB10530609	MOTOR PULLEY/BRAKE DRUM
610	PCAP01M	CAP SCREW M6-1 X 16
611	PSB10530611	TAPER PIN #4 X 1-3/4"
612	PSB10530612	BRAKE PIVOT ARM
613	PEC09M	E-CLIP 6MM
614	PSB10530614	BRAKE ADJUSTMENT PLATE
615	PCAP45M	CAP SCREW M8-1.25 X 45
616	PW01M	FLAT WASHER 8MM
617	PSB10530617	BRAKE BELT
618	PSB10530618	PIVOT ARM CAPTIVE PIN
619	PSB10530619	MOTOR 7.5HP 220V 3PH (SB1053)
619	PSB1054F0619	MOTOR 7.5HP 440V 3PH (SB1054F-55F)
619-1	PSB10530619-1	MOTOR FAN COVER (SB1053)
619-1	PSB1054F0619-1	MOTOR FAN COVER (SB1054F-55F)
619-2	PSB10530619-2	MOTOR FAN (SB1053)
619-2	PSB1054F0619-2	MOTOR FAN (SB1054F-55F)
619-3	PSB10530619-3	JUNCTION BOX (SB1053)
619-3	PSB1054F0619-3	JUNCTION BOX (SB1054F-55F)
619-4	PSB10530619-4	FRONT MOTOR BEARING (SB1053)
619-4	PSB1054F0619-4	FRONT MOTOR BEARING (SB1054F-55F)
619-5	PSB10530619-5	REAR MOTOR BEARING (SB10530)
619-5	PSB1054F0619-5	REAR MOTOR BEARING (SB1054F-55F)
620	PSB10530620	END GEAR COVER BOLT
621	PS68M	PHLP HD SCR M6-1 X 10
622	PSB10530622	SIDE MOTOR ACCESS PANEL
623	PN03M	HEX NUT M8-1.25
624	PSB10530624	SPRING BOLT
625	PSB10530625	EXTENSION SPRING
626	PCAP60M	CAP SCREW M8-1.25 X 55
627	PSB10530627	BRAKE MOUNT SPACER
628	PSB10530628	MOTOR MOUNT PLATE
629	PB18OM	HEX BOLT M10-1.5 X 40 BLK
630	PLW06M	LOCK WASHER 10MM
631	PN13M	HEX NUT M16-2
632	PSB10530632	STUD-FT M16-2 X 170
633	PW08M	FLAT WASHER 16MM
634	PSB10530634	CUSHION SPACER RUBBER
635	PSB10530635	MOTOR MOUNT SHAFT
636	PN04M	HEX NUT M4-.7
637	PSB10530637	END GEAR COVER LIMIT SWITCH TM1307
638	PS65M	PHLP HD SCR M4-.7 X 40
639	PSB10530639	REAR MOTOR ACCESS PANEL
640	PW03M	FLAT WASHER 6MM
641	PCAP01M	CAP SCREW M6-1 X 16
642	PCAP14M	CAP SCREW M8-1.25 X 20
643	PW01M	FLAT WASHER 8MM
644	PN03M	HEX NUT M8-1.25
645	PSB10530645	ELECTRICAL CABINET
646	PN01M	HEX NUT M6-1

Saddle & Cross Slide 1

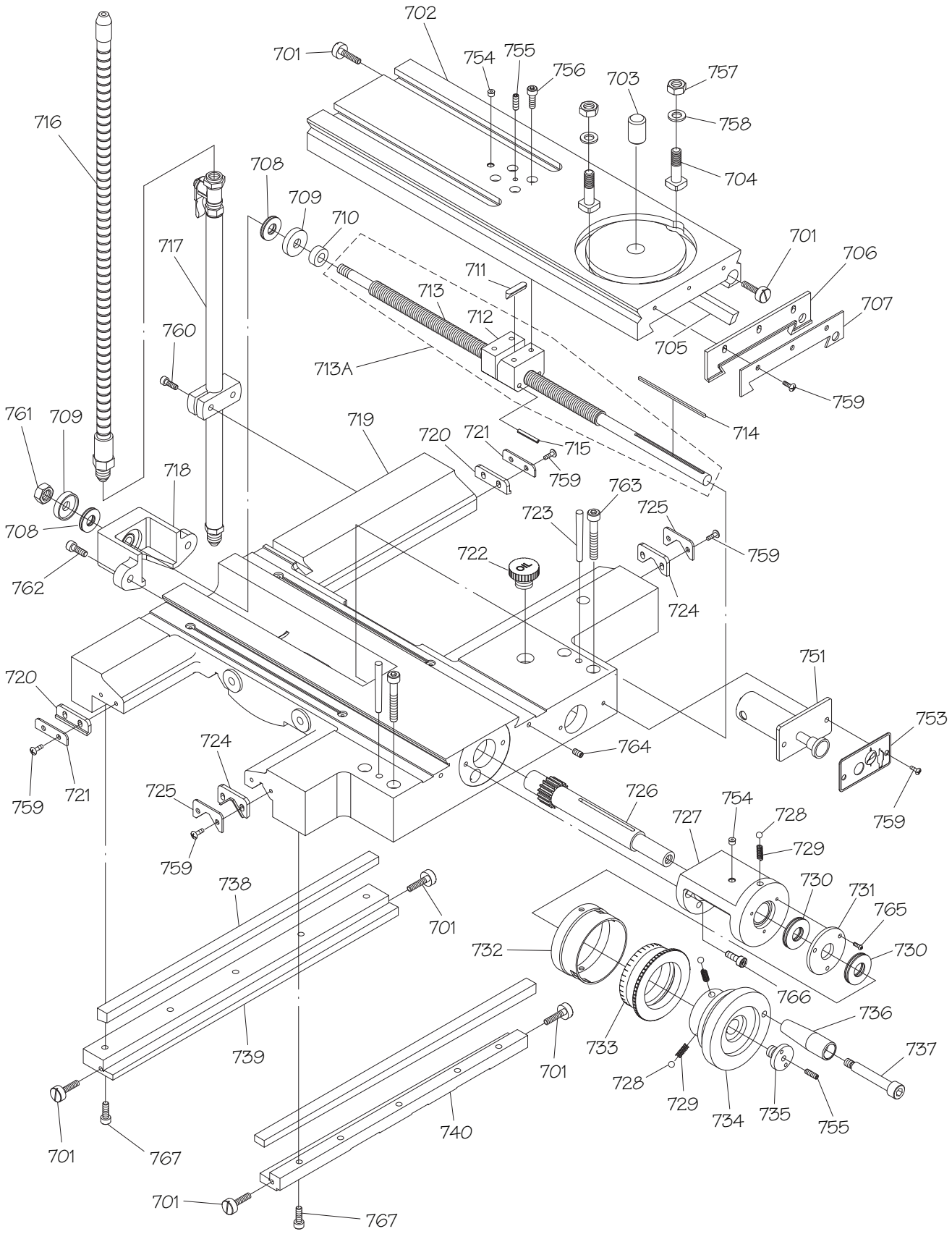

Saddle & Cross Slide 2

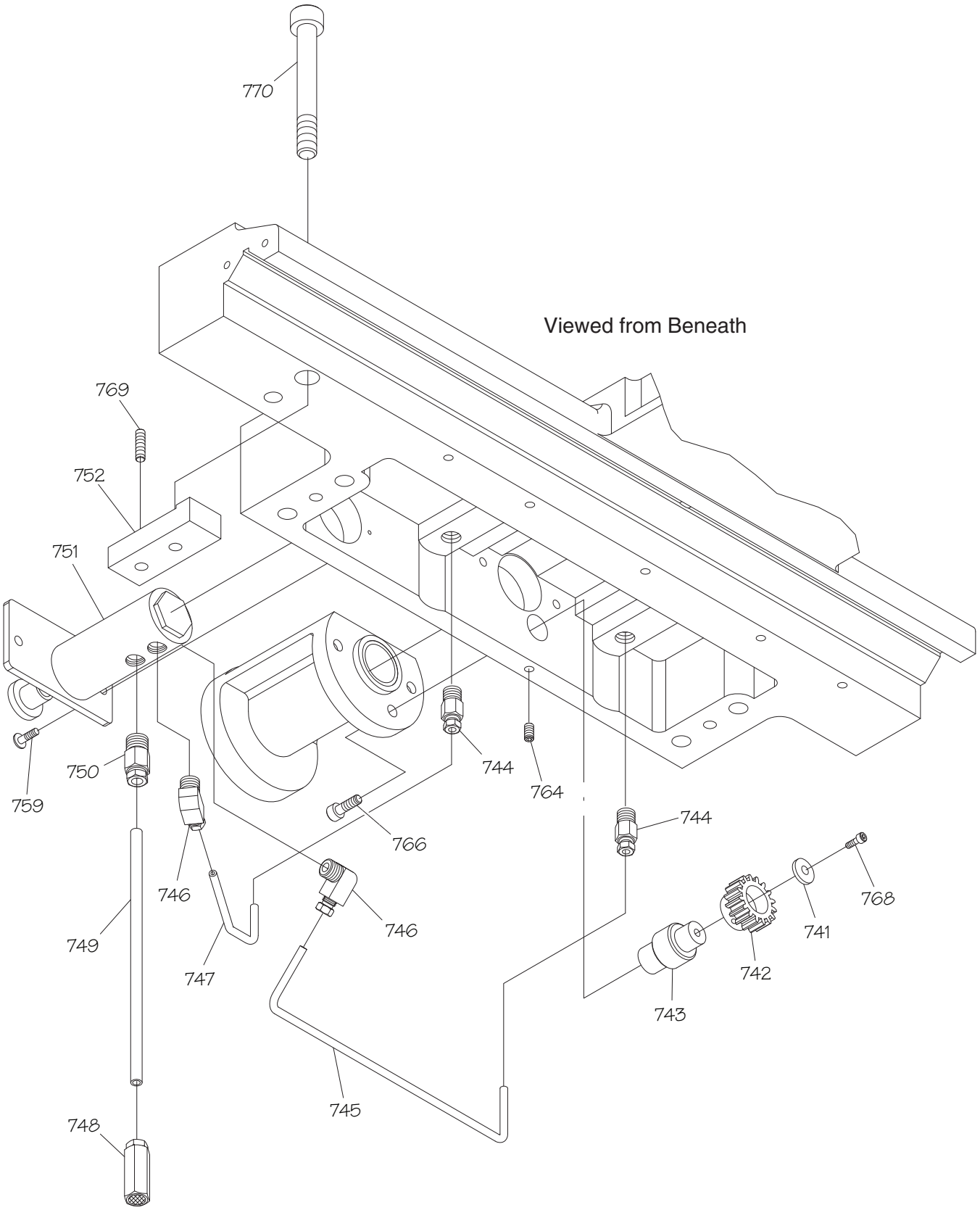

Saddle & Cross Slide Parts List

REF	PART #	DESCRIPTION
701	PSB10530701	GIB ADJUSTMENT SCREW
702	PSB10530702	CROSS SLIDE
703	PSB10530703	COMPOUND SLIDE PIVOT PIN
704	PSB10530704	COMPOUND SLIDE T-BOLT
705	PSB10530705	CROSS SLIDE GIB
706	PSB10530706	CROSS SLIDE WIPER
707	PSB10530707	WIPER PLATE
708	PSB10530708	THRUST BEARING NTB/AS2 1226
709	PSB10530709	BEARING SEAT
710	PSB10530710	SPACER
711	PSB10530711	HALF NUT WEDGE
712	PSB10530713A	CROSS SLIDE HALF NUT
713A	PSB10530713A	CROSS SLIDE LEADSCREW W/HALF NUT
713	PSB10530713A	CROSS SLIDE LEADSCREW
714	PK165M	KEY 3 X 3 X 100
715	PRP28M	ROLL PIN 5 X 40
716	PSB10530716	COOLANT NOZZLE 3/8" PT X 24"
717	PSB10530717	COOLANT STAND PIPE W/VALVE 3/8" PT
718	PSB10530718	STAND PIPE BRACKET
719	PSB10530719	SADDLE
720	PSB10530720	SADDLE STRAIGHT WIPER
721	PSB10530721	STRAIGHT WIPER PLATE
722	PSB10530001	OIL FILL CAP
723	PSB10530723	TAPER PIN #6 X 2-3/4"
724	PSB10530724	SADDLE V-WIPER
725	PSB10530725	V-WIPER PLATE
726	PSB10530726	PINION
727	PSB10530727	PINION BRACKET
728	PSTB001	STEEL BALL 1/4
729	PSB10530729	COMPRESSION SPRING 6 X 15
730	PSB10530730	THRUST BEARING NTB/AS2 1730
731	PSB10530731	BRACKET END CAP
732	PSB10530732	GRADUATED DIAL RING
733	PSB10530733	CROSS SLIDE GRADUATED DIAL
734	PSB10530734	CROSS SLIDE HANDWHEEL
735	PSB10530735	HANDWHEEL END CAP M12-1.75

REF	PART #	DESCRIPTION
736	PSB10530736	HANDWHEEL HANDLE
737	PSB10530737	HANDLE CAP SCREW
738	PSB10530738	CARRIAGE GIB
739	PSB10530739	REAR CARRIAGE GIB CLAMP
740	PSB10530740	FRONT CARRIAGE GIB CLAMP
741	PSB10530741	GEAR FLAT WASHER
742	PSB10530742	GEAR 16T
743	PSB10530743	GEAR SHAFT
744	PSB10530744	PIPE ADAPTER 1/8" PT X 4MM
745	PSB10530745	OIL TUBE 4 X 260MM
746	PSB10530746	PIPE ELBOW ADAPTER 1/8" PT X 4MM
747	PSB10530747	OIL TUBE 4 X 120MM
748	PSB10530748	OIL FILTER 6MM
749	PSB10530749	OIL TUBE 6 X 160MM
750	PSB10530750	PIPE ADAPTER 1/8" PT X 6MM
751	PSB10530751	OIL PUMP ASSEMBLY
752	PSB10530752	CLAMP PLATE
753	PSB10530753	OIL PUMP FRONT PANEL
754	PLUBE001	TAP-IN BALL OILER 1/4
755	PSS28M	SET SCREW M6-1 X 30
756	PCAP07M	CAP SCREW M6-1 X 30
757	PN02M	HEX NUT M10-1.5
758	PW04M	FLAT WASHER 10MM
759	PS08M	PHLP HD SCR M5-.8 X 12
760	PCAP06M	CAP SCREW M6-1 X 25
761	PN02M	HEX NUT M10-1.5
762	PCAP195M	CAP SCREW M6-1 X 20 CHROME
763	PCAP35M	CAP SCREW M8-1.25 X 60
764	PSS03M	SET SCREW M6-1 X 8
765	PCAP17M	CAP SCREW M4-.7 X 10
766	PCAP02M	CAP SCREW M6-1 X 20
767	PCAP02M	CAP SCREW M6-1 X 20
768	PCAP24M	CAP SCREW M5-.8 X 16
769	PSS74M	SET SCREW M8-1.25 X 35
770	PCAP169M	CAP SCREW M12-1.75 X 75

Compound Slide & Tool Post

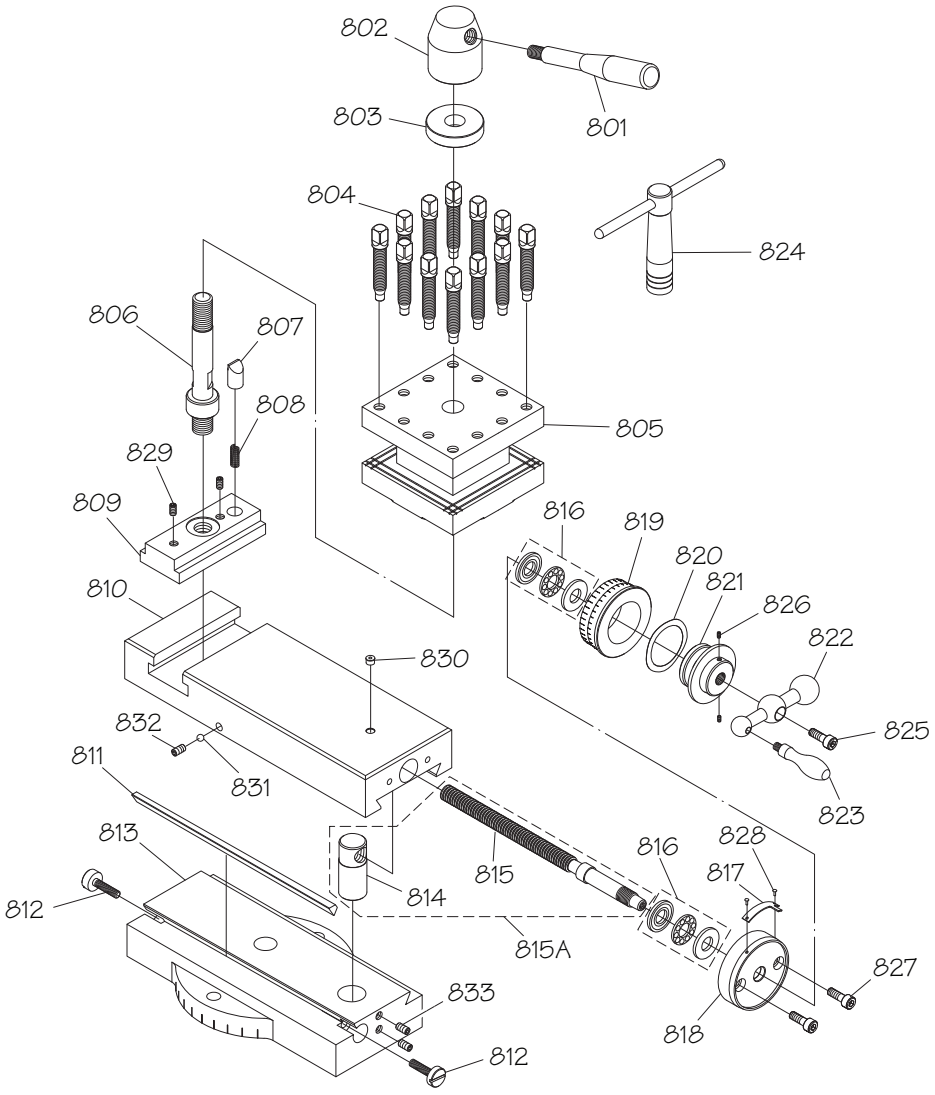

REF	PART #	DESCRIPTION
801	PSB10530801	TOOL POST LEVER
802	PSB10530802	POST NUT
803	PSB10530803	POST FLAT WASHER
804	PSB10530804	TOOL CLAMP BOLT
805	PSB10530805	TOOL POST BODY
806	PSB10530806	TOOL POST
807	PSB10530807	PLUNGER
808	PSB10530808	COMPRESSION SPRING 6 X 27
809	PSB10530809	TOOL POST T-SLIDE
810	PSB10530810	COMPOUND SLIDE
811	PSB10530811	COMPOUND SLIDE GIB
812	PSB10530812	GIB ADJUSTMENT SCREW
813	PSB10530813	COMPOUND SLIDE SWIVEL BASE
814	PSB10530815A	COMPOUND SLIDE LEADSCREW NUT
815A	PSB10530815A	COMPOUND SLIDE LEADSCREW W/NUT
815	PSB10530815A	COMPOUND SLIDE LEADSCREW
816	P51101	THRUST BEARING 51101

REF	PART #	DESCRIPTION
817	PSB10530817	GRADUATED DIAL POINTER
818	PSB10530818	LEADSCREW BRACKET
819	PSB10530819	COMPOUND SLIDE GRADUATED DIAL
820	PSB10530820	WAVY WASHER 35 X 45 X 0.3MM
821	PSB10530821	HANDLE HUB
822	PSB10530822	BALL HANDLE
823	PSB10530823	HANDLE
824	PSB10530824	TOOL POST WRENCH
825	PCAP01M	CAP SCREW M6-1 X 16
826	PSS04M	SET SCREW M6-1 X 12
827	PCAP26M	CAP SCREW M6-1 X 12
828	PRIV001M	STEEL FLUTED RIVET 2 X 5MM
829	PSS14M	SET SCREW M8-1.25 X 12
830	PLUBE001	TAP-IN BALL OILER 1/4
831	PSTB001	STEEL BALL 1/4
832	PSS14M	SET SCREW M8-1.25 X 12
833	PSS03M	SET SCREW M6-1 X 8

Bed & Shafts

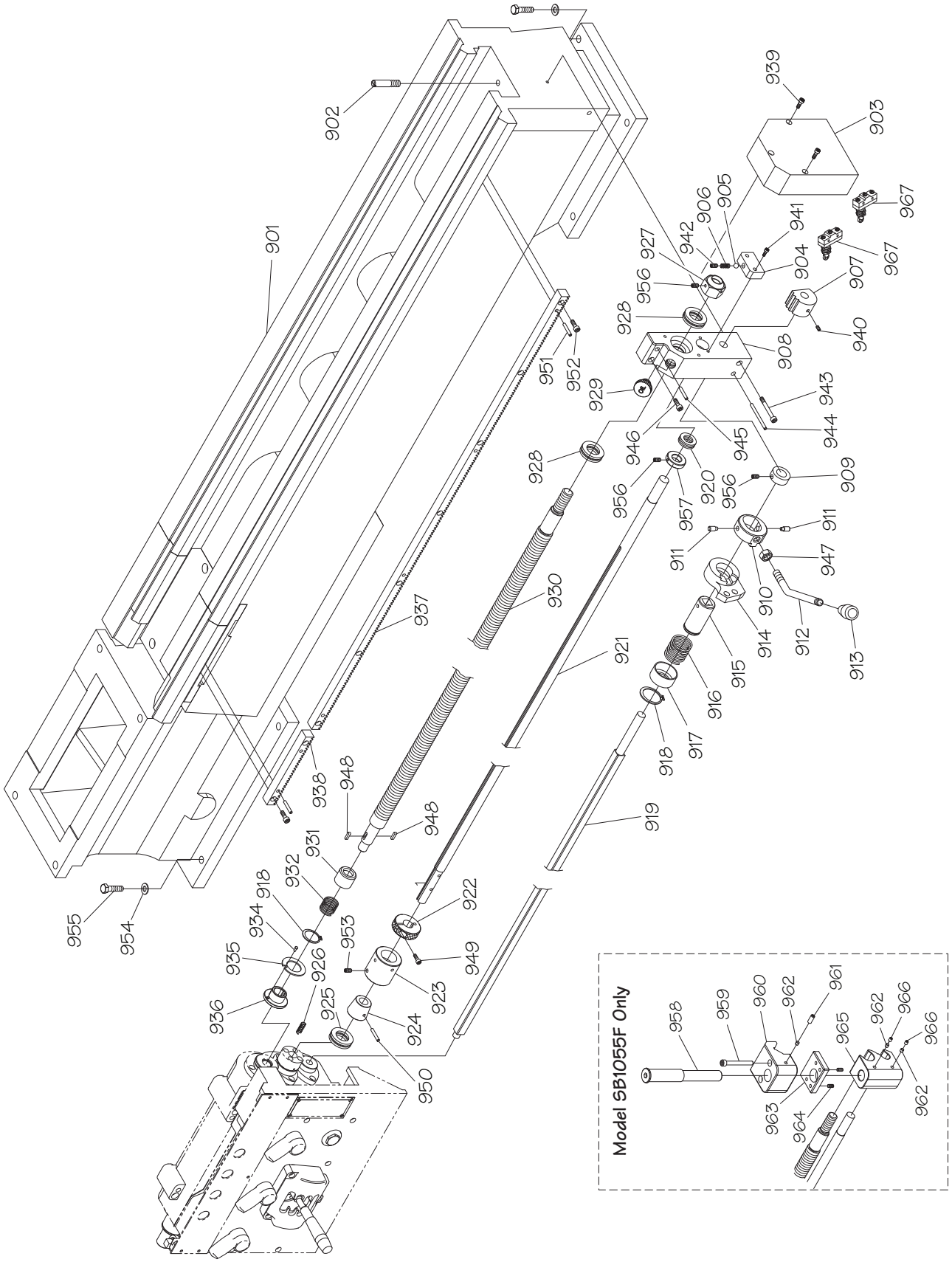
901
902
903
904
905
906
907
908
909
911
912
913
914
915
916
917
918
919
920
921
922
923
924
925
926
927
928
929
930
931
932
934
935
936
937
938
939
940
941
942
943
944
945
946
947
948
949
950
951
952
953
954
955
956
957
967
Model SB1055F Only
958
959
960
961
962
963
964
965
966

Bed & Shafts Parts List

REF	PART #	DESCRIPTION
901	PSB10530901	BED (SB1053)
901	PSB10540901	BED (SB1054F)
901	PSB1055F0901	BED (SB1055F)
902	PSB10530902	CARRIAGE STOP BOLT
903	PSB10530903	SHAFT END BRACKET COVER
904	PSB10530904	RATCHET STOP
905	PSTB002	STEEL BALL 5/16
906	PSB10530906	COMPRESSION SPRING 8 X 23
907	PSB10530907	RATCHET COLLAR
908	PSB10530908	SHAFT END BRACKET
909	PSB10530909	LOCK COLLAR
910	PSB10530910	SPINDLE ON/OFF LEVER HUB
911	PSB10530911	HUB STEP PIN
912	PSB10530912	SPINDLE ON/OFF LEVER
913	PSB10530913	LEVER KNOB
914	PSB10530914	SPINDLE ROD BRACKET
915	PSB10530915	SPINDLE ROD SLEEVE
916	PSB10530916	COMPRESSION SPRING 38 X 75
917	PSB10530917	SPRING HOUSING
918	PR37M	EXT RETAINING RING 32MM
919	PSB10530919	SPINDLE ROD (SB1053-54F)
919	PSB1055F0919	SPINDLE ROD (SB1055F)
920	PSB10530920	THRUST BEARING NTB/AS2 1831
921	PSB10530921	FEED ROD (SB1053-54F)
921	PSB1055F0921	FEED ROD (SB1055F)
922	PSB10530922	FEED ROD STOP COLLAR
923	PSB10530923	CLUTCH COLLAR
924	PSB10530924	TAPERED BUSHING
925	P51203	THRUST BEARING 51203
926	PSB10530926	COMPRESSIONS SPRING 9 X 32
927	PSB10530927	LEADSCREW LOCK COLLAR
928	P51105	THRUST BEARING 51105
929	PSB10530001	OIL FILL CAP
930	PSB10530930	LONGITUDINAL LEADSCREW (SB1053-54F)
930	PSB1055F0930	LONGITUDINAL LEADSCREW (SB1055F)
931	PSB10530931	SPRING COVER
932	PSB10530932	COMPRESSION SPRING 27 X 55

REF	PART #	DESCRIPTION
934	PSB10530934	SHEAR PIN (SB1053)
934	PSB10360927	SHEAR PIN (SB1054F-55F)
935	PSB10530935	SHROUD COLLAR
936	PSB10530936	COLLAR
937	PSB10530937	RACK (SB1053-54F)
937	PSB1055F0937	RACK (SB1055F)
938	PSB10530938	GAP RACK (SB1053-54F)
938	PSB1055F0938	GAP RACK (SB1055F)
939	PCAP83M	CAP SCREW M6-1 X 55
940	PSS11M	SET SCREW M6-1 X 16
941	PCAP06M	CAP SCREW M6-1 X 25
942	PSS30M	SET SCREW M10-1.5 X 10
943	PCAP128M	CAP SCREW M8-1.25 X 70
944	PSB10530944	TAPER PIN #7 X 3-1/4"
945	PSB10530945	TAPER PIN #7 X 2"
946	PCAP40M	CAP SCREW M8-1.25 X 35
947	PN09M	HEX NUT M12-1.75
948	PK20M	KEY 5 X 5 X 15
949	PCAP02M	CAP SCREW M6-1 X 20
950	PSB10530950	TAPER PIN #4 X 30
951	PRP93M	ROLL PIN 6 X 25
952	PCAP02M	CAP SCREW M6-1 X 20
953	PSS02M	SET SCREW M6-1 X 6
954	PW06M	FLAT WASHER 12MM
955	PB187M	HEX BOLT M12-1.75 X 45 BLK C12.9
956	PSS03M	SET SCREW M6-1 X 8
957	PSB10530957	LOCK COLLAR
958	PSB1055F958	STEP SHAFT
959	PCAP13M	CAP SCREW M8-1.25 X 30
960	PSB1055F960	BED CLAMP
961	PSS09M	SET SCREW M8-1.25 X 20
962	PSB1055F962	PLUNGER
963	PSB1055F963	LOWER CLAMP PLATE
964	PSS06M	SET SCREW M8-1.25 X 16
965	PSB1055F965	SHAFT SUPPORT
966	PSS20M	SET SCREW M8-1.25 X 8
967	PSB10530967	SPINDLE SWITCH

Cabinet Stands & Panels 1

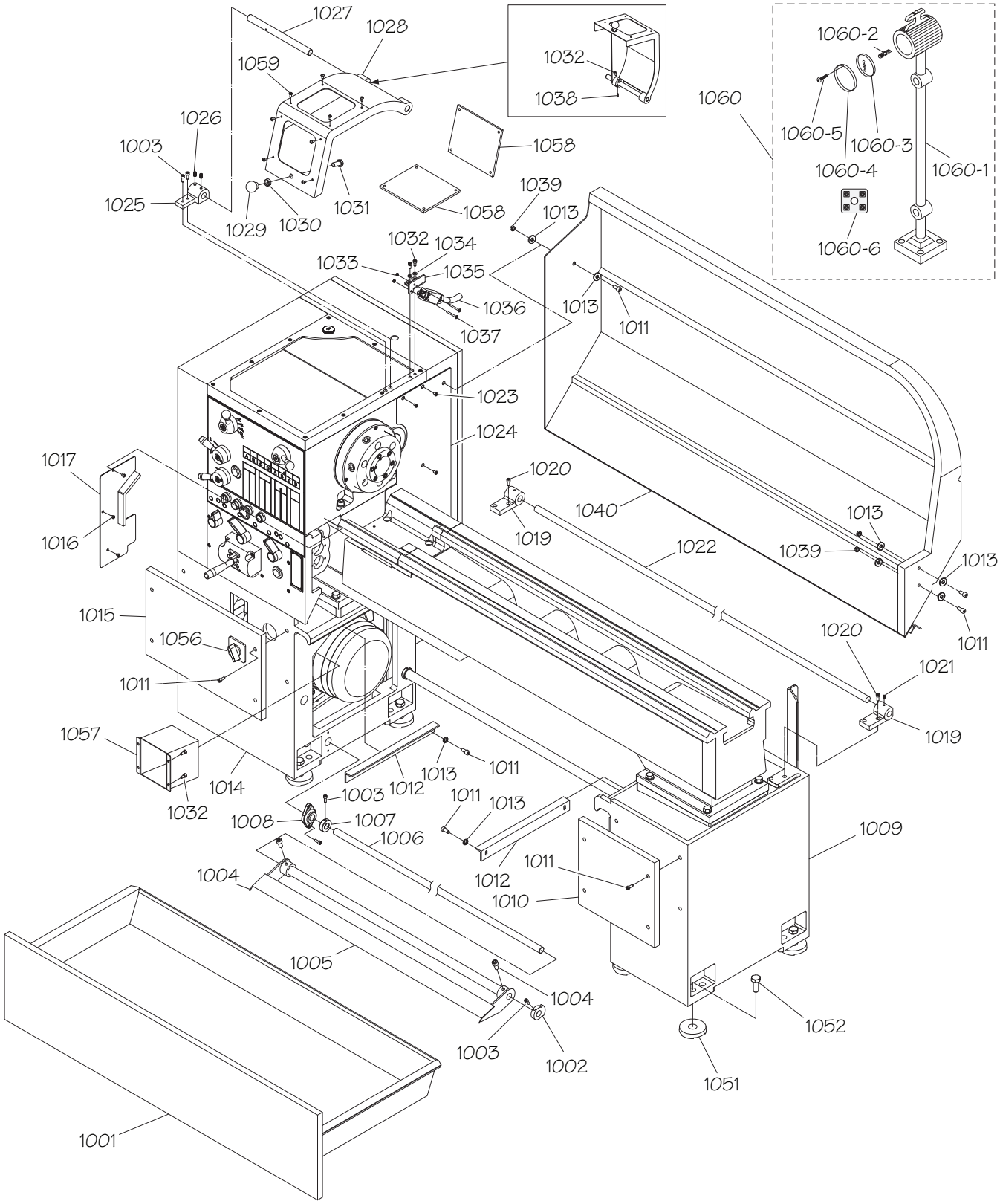

Cabinet Stands & Panels 2

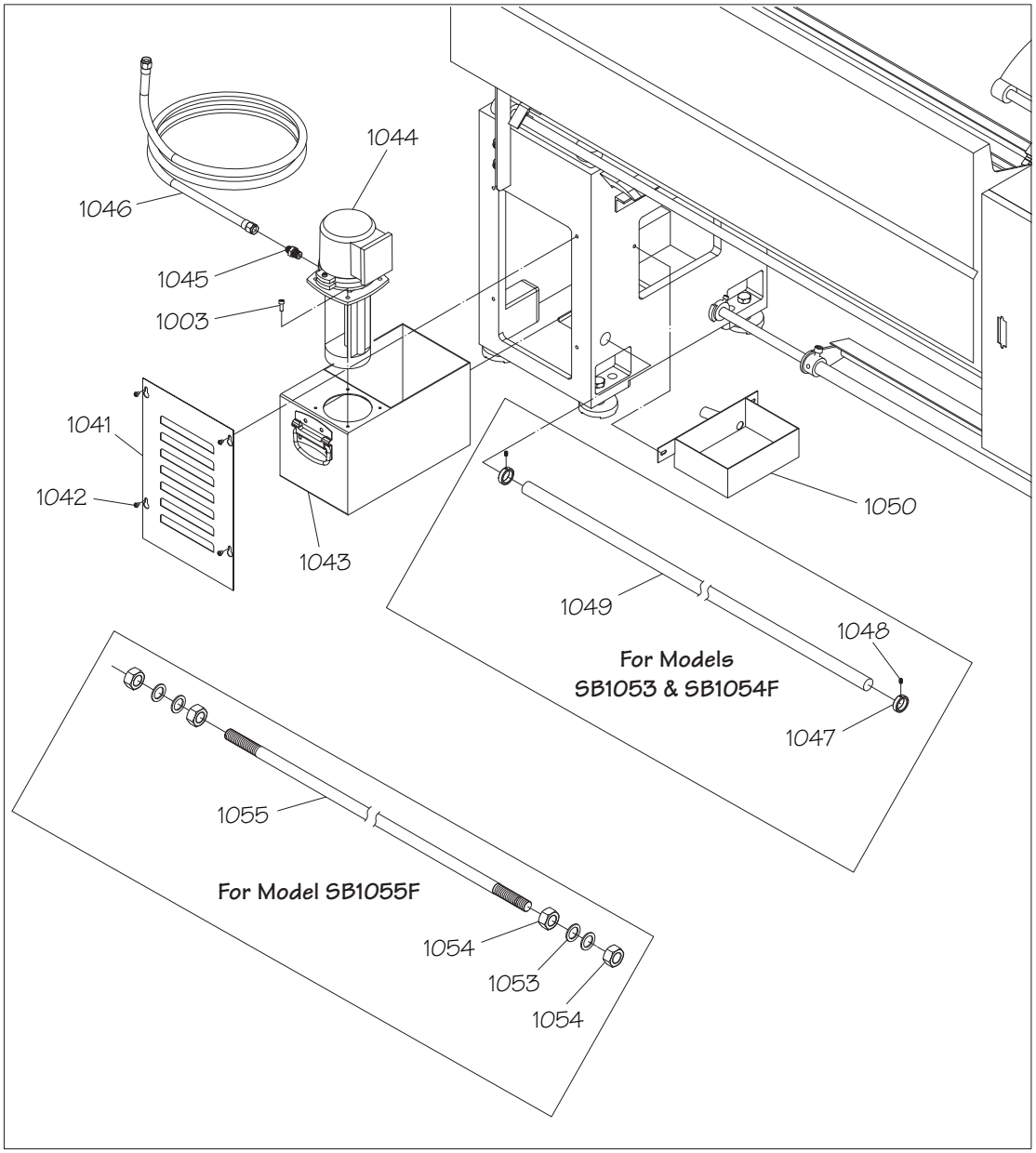

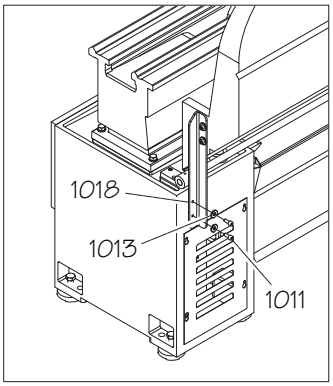

Cabinet Stands & Panels Parts List

REF	PART #	DESCRIPTION
1001	PSB10531001	CHIP DRAWER (SB1053-54F)
1001	PSB1055F1001	CHIP DRAWER (SB1055F)
1002	PSB10531002	ECCENTRIC LOCK COLLAR
1003	PCAP85M	CAP SCREW M6-1 X 6
1004	PB56M	CAP SCREW M10-1.5 X 20
1005	PSB10531005	BRAKE PEDAL (SB1053-54F)
1005	PSB1055F1005	BRAKE PEDAL (SB1055F)
1006	PSB10531006	BRAKE PEDAL ROD (SB1053-54F)
1006	PSB1055F1006	BRAKE PEDAL ROD (SB1055F)
1007	PSB10531007	LOCK COLLAR
1008	PSB10531008	ROD BRACKET
1009	PSB10531009	RIGHT CABINET STAND
1010	PSB10531010	RIGHT CABINET FRONT PANEL
1011	PCAP196M	CAP SCREW M8-1.25 X 25 CHROME
1012	PSB10531012	CHIP DRAWER SUPPORT
1013	PW01M	FLAT WASHER 8MM
1014	PSB10531014	LEFT CABINET STAND
1015	PSB10531015	LEFT CABINET FRONT PANEL
1016	PS05M	PHLP HD SCR M5-.8 X 8
1017	PSB10531017	FEED ROD CLUTCH SIDE COVER
1018	PSB10531018	BACK SPLASH SUPPORT
1019	PSB10531019	ROD BRACKET
1020	PCAP195M	CAP SCREW M6-1 X 20 CHROME
1021	PSS01M	SET SCREW M6-1 X 10
1022	PSB10531022	BACK SPLASH ROD (SB1053-54F)
1022	PSB1055F1022	BACK SPLASH ROD (SB1055F)
1023	PFH71M	FLAT HD CAP SCR M5-.8 X 8
1024	PSB10531024	HEADSTOCK SIDE COVER (SB1053)
1024	PSB1054F1024	HEADSTOCK SIDE COVER (SB1054F-55F)
1025	PSB10531025	CHUCK GUARD PIVOT BRACKET
1026	PSS14M	SET SCREW M8-1.25 X 12
1027	PSB10531027	CHUCK GUARD PIVOT ROD
1028	PSB10531028	CHUCK GUARD
1029	PSB10531029	KNOB 1/2-13
1030	PN06	HEX NUT 1/2-13
1031	PB107	HEX BOLT 1/2-20 X 1 BLK
1032	PCAP26M	CAP SCREW M6-1 X 12

REF	PART #	DESCRIPTION
1033	PN04M	HEX NUT M4-.7
1034	PLW03M	LOCK WASHER 6MM
1035	PSB10531035	LIMIT SWITCH BRACKET
1036	PSB10531036	CHUCK GUARD LIMIT SWITCH TZ9212
1037	PS40M	PHLP HD SCR M5-.8 X 16
1038	PSS34M	SET SCREW M5-.8 X 16
1039	PN03M	HEX NUT M8-1.25
1040	PSB10531040	BACK SPLASH (SB1053-54F)
1040	PSB1055F1040	BACK SPLASH (SB1055F)
1041	PSB10531041	COOLANT PUMP ACCESS PANEL
1042	PS68M	PHLP HD SCR M6-1 X 10
1043	PSB10531043	COOLANT TANK 11.3 LITER
1044	PSB10531044	COOLANT PUMP 1/8HP 220V 3PH (SB1053)
1044	PSB1054F1044	COOLANT PUMP 1/8HP 440V 3PH (SB1054F-55F)
1045	PSB10531045	PIPE NIPPLE 3/8" PT X 3/8" PH
1046	PSB10531046	COOLANT HOSE 3/8" X 72" (SB1053)
1046	PSB10531046	COOLANT HOSE 3/8" X 72" (SB1054F)
1046	PSB1055F1046	COOLANT HOSE 3/8" X 78" (SB1055F)
1047	PSB10531047	LOCK COLLAR
1048	PSS03M	SET SCREW M6-1 X 8
1049	PSB10531049	CABINET STAND SUPPORT ROD
1050	PSB10531050	COOLANT CATCH TRAY
1051	PSB10531051	LEVELING PAD
1052	PB188M	HEX BOLT M16-2 X 60 BLK C12.9
1053	PSB1055F1053	SUPPORT ROD FLAT WASHER
1054	PN43	HEX NUT 1-12
1055	PSB1055F1058	CABINET STAND SUPPORT ROD
1056	PSB10531056	2-SPEED MOTOR SWITCH
1057	PSB10531057	SWITCH BOX
1058	PSB10531058	CHUCK GUARD CLEAR PANEL
1059	PS14M	PHLP HD SCR M6-1 X 12
1060	PSB10531060	HALOGEN LAMP ASSEMBLY
1060-1	PSB10531060-1	LAMP BODY
1060-2	PBULB3	HALOGEN BULB 24V
1060-3	PSB10531060-3	LENS
1060-4	PSB10531060-4	LENS RETAINER
1060-5	PS55M	PHLP HD SCR M3-.5 X 10
1060-6	PSB10531060-6	LAMP TERMINAL BLOCK 2P

Tailstock

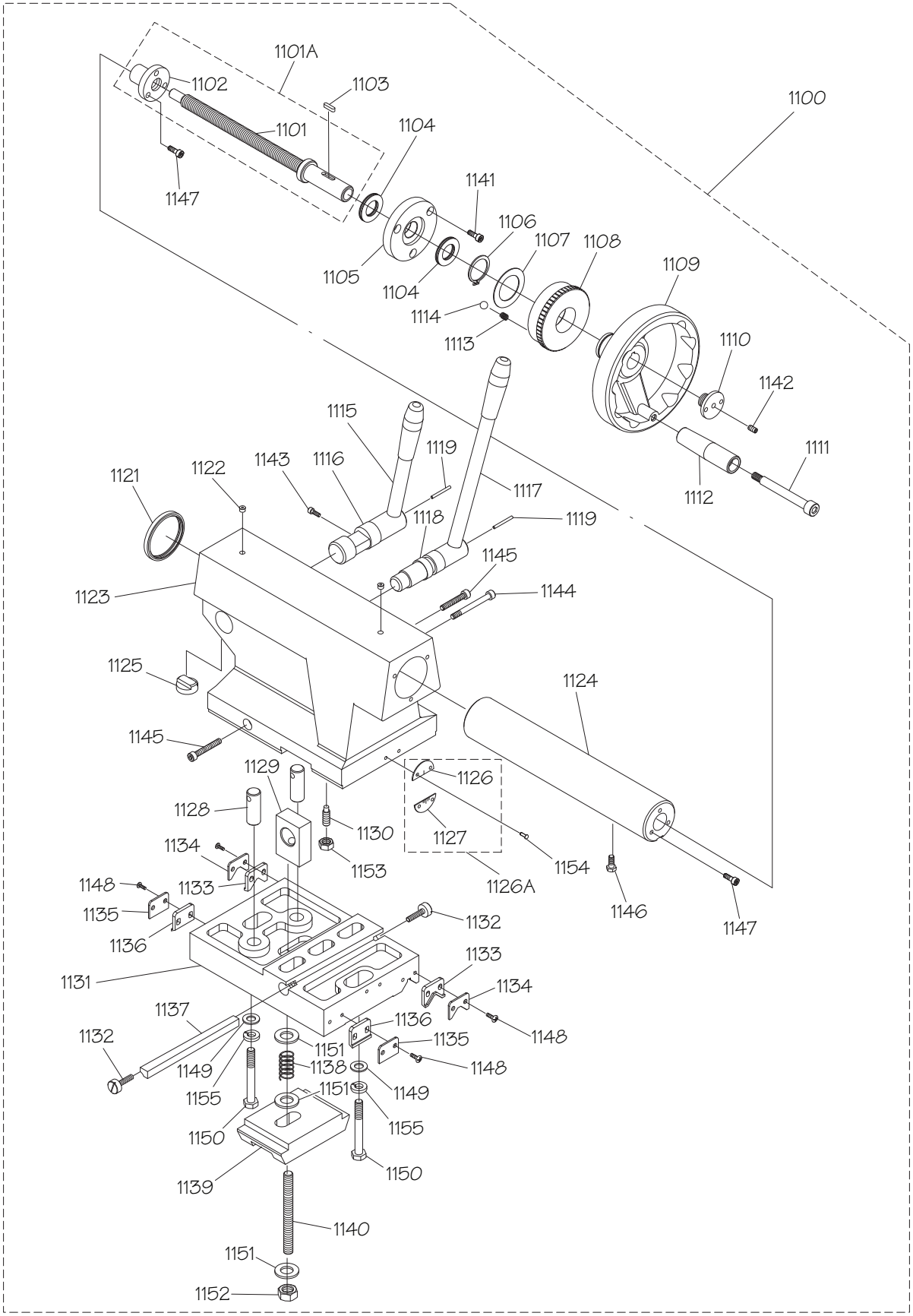
1101A
1102
1103
1100
1101
1104
1147
1141
1106
1107
1108
1109
1105
1104
1114
1113
1110
1142
1111
1112
1115
1119
1121
1122
1143
1116
1117
1118
1119
1145
1123
1144
1125
1124
1145
1129
1126
1128
1130
1127
1134
1153
1154
1148
1133
1126A
1146
1147
1135
1132
1136
1133
1131
1134
1137
1136
1148
1132
1135
1151
1149
1138
1148
1151
1149
1155
1155
1150
1150
1139
1140
1151
1152

Tailstock Parts List

REF	PART #	DESCRIPTION
1100	PSB10531100	TAILSTOCK ASSEMBLY (SB1053)
1100	PSB1054F1100	TAILSTOCK ASSEMBLY (SB1054F-55F)
1101A	PSB10531101A	TAILSTOCK LEADSCREW W/NUT
1101	PSB10531101	TAILSTOCK LEADSCREW
1102	PSB10531102	LEADSCREW NUT
1103	PK34M	KEY 5 X 5 X 20
1104	PSB10531104	THRUST BEARING MTB/AS2 2035
1105	PSB10531105	LEADSCREW BRACKET
1106	PR37M	EXT RETAINING RING 32MM
1107	PSB10531107	THRUST WASHER
1108	PSB10531108	GRADUATED DIAL
1109	PSB10531109	HANDWHEEL
1110	PSB10531110	HANDWHEEL END CAP
1111	PSB10531111	HANDLE CAP SCREW M8-1.25 X 90
1112	PSB10531112	HANDLE
1113	PSB10531113	COMPRESSION SPRING 6.2 X 16
1114	PSTB001	STEEL BALL 1/4
1115	PSB10531115	QUILL LOCK LEVER
1116	PSB10531116	QUILL LOCK SHAFT
1117	PSB10531117	TAILSTOCK LOCK LEVER
1118	PSB10531118	TAILSTOCK LOCK SHAFT
1119	PRP04M	ROLL PIN 4 X 24
1121	PSB10531121	OIL SEAL DH53
1122	PLUBE001	TAP-IN BALL OILER 1/4
1123	PSB10531123	TAILSTOCK CASTING (SB1053)
1123	PSB1054F1123	TAILSTOCK CASTING (SB1054F-55F)
1124	PSB10531124	QUILL
1125	PSB10531125	QUILL ALIGNMENT KEY
1126A	PSB10531126A	OFFSET INDICATOR ASSEMBLY
1126	PSB10531126	UPPER OFFSET INDICATOR
1127	PSB10531127	LOWER OFFSET INDICATOR
1128	PSB10531128	ALIGNMENT PIN
1129	PSB10531129	ALIGNMENT BLOCK
1130	PSB10531130	PILOT SET SCREW M8-1.25 X 25 (SB1053)
1130	PSB1054F1130	PILOT SET SCREW M8-1.25 X 50 (SB1054F-55F)
1131	PSB10531131	TAILSTOCK BASE (SB1053)
1131	PSB10531131	TAILSTOCK BASE (SB1054F-55F)
1132	PSB10531132	GIB ADJUSTMENT SCREW
1133	PSB10531133	TAILSTOCK V-WIPER
1134	PSB10531134	V-WIPER PLATE
1135	PSB10531135	STRAIGHT WIPER PLATE
1136	PSB10531136	TAILSTOCK STRAIGHT WIPER
1137	PSB10531137	TAILSTOCK GIB
1138	PSB10531138	COMPRESSION SPRING 25 X 45
1139	PSB10531139	CLAMP PLATE
1140	PSB10531140	STUD-FT M14-2 X 110 (SB1053)
1140	PSB1054F1140	STUD-FT M14-2 X 125 (SB1054F-55F)
1141	PCAP01M	CAP SCREW M6-1 X 16
1142	PSS04M	SET SCREW M6-1 X 12
1143	PCAP26M	CAP SCREW M6-1 X 12
1144	PCAP128M	CAP SCREW M8-1.25 X 70
1145	PCAP35M	CAP SCREW M8-1.25 X 60
1146	PCAP68M	CAP SCREW M6-1 X 8
1147	PCAP01M	CAP SCREW M6-1 X 16
1148	PS08M	PHLP HD SCR M5-.8 X 12
1149	PSB10531149	CLAMP FLAT WASHER
1150	PB186M	HEX BOLT M10-1.5 X 55 BLK
1151	PW10M	FLAT WASHER 14MM
1152	PN32M	HEX NUT M14-2
1153	PN03M	HEX NUT M8-1.25
1154	PRIV001M	STEEL FLUTED RIVET 2 X 5MM
1155	PLW06M	LOCK WASHER 10MM

Thread Dial

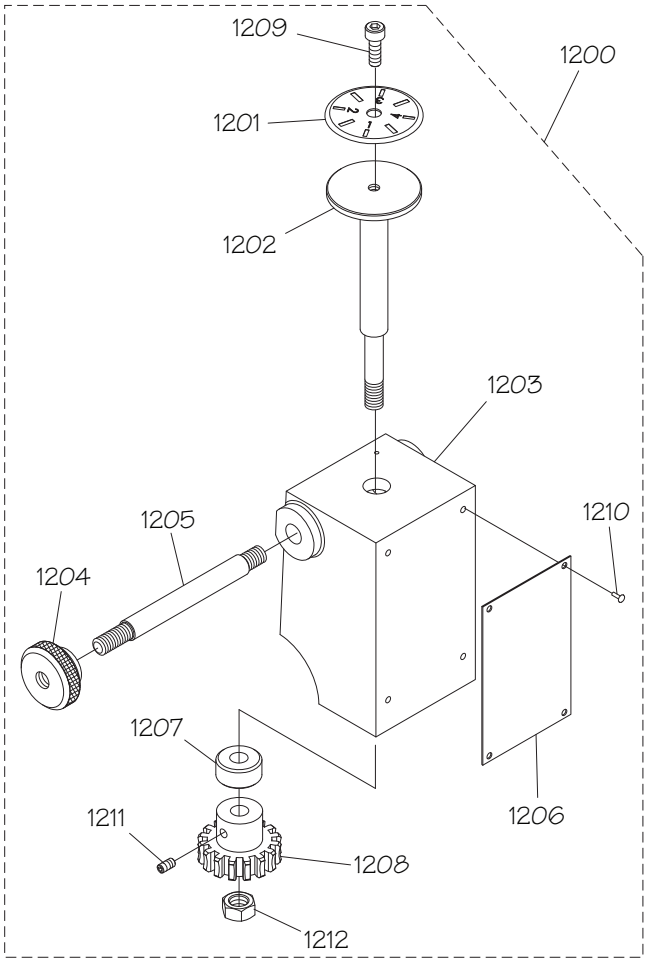

REF	PART #	DESCRIPTION
1200	PSB10531200	THREAD DIAL ASSEMBLY
1201	PSB10531201	DIAL INDICATOR
1202	PSB10531202	PIVOT SHAFT
1203	PSB10531203	THREAD DIAL BODY
1204	PSB10531204	KNURLED KNOB
1205	PSB10531205	LOCK STUD-DE
1206	PSB10531206	DIAL CHART PANEL
1207	PSB10531207	SPACER
1208	PSB10531208	DIAL GEAR 16T
1209	PCAP04M	CAP SCREW M6-1 X 10
1210	PRIV001M	STEEL FLUTED RIVET 2 X 5MM
1211	PSS02M	SET SCREW M6-1 X 6
1212	PN03M	HEX NUT M8-1.25

Micrometer Stop

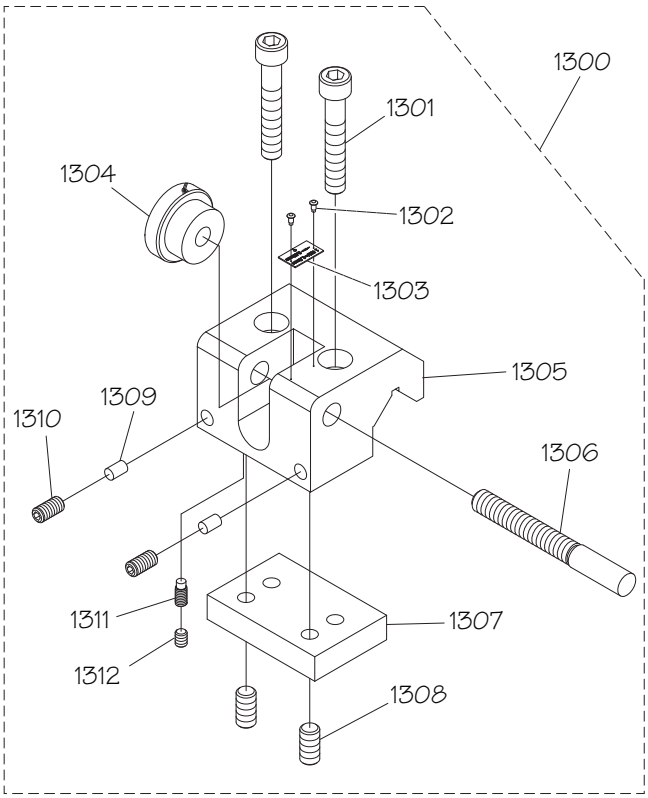

REF	PART #	DESCRIPTION
1300	PSB10531300	MICROMETER STOP ASSEMBLY
1301	PCAP71M	CAP SCREW M10-1.5 X 60
1302	PRIV001M	STEEL FLUTED RIVET 2 X 5MM
1303	PSB10531303	INDICATOR PLATE
1304	PSB10531304	MICROMETER DIAL
1305	PSB10531305	MICROMETER DIAL BODY
1306	PSB10531306	MICROMETER ROD
1307	PSB10531307	CLAMP PLATE
1308	PSS10M	SET SCREW M10-1.5 X 20
1309	PSB10531309	PLUNGER COPPER
1310	PSS06M	SET SCREW M8-1.25 X 16
1311	PSB10531311	PILOT SET SCREW M8-1.25 X 12
1312	PSS14M	SET SCREW M8-1.25 X 12

Steady Rest

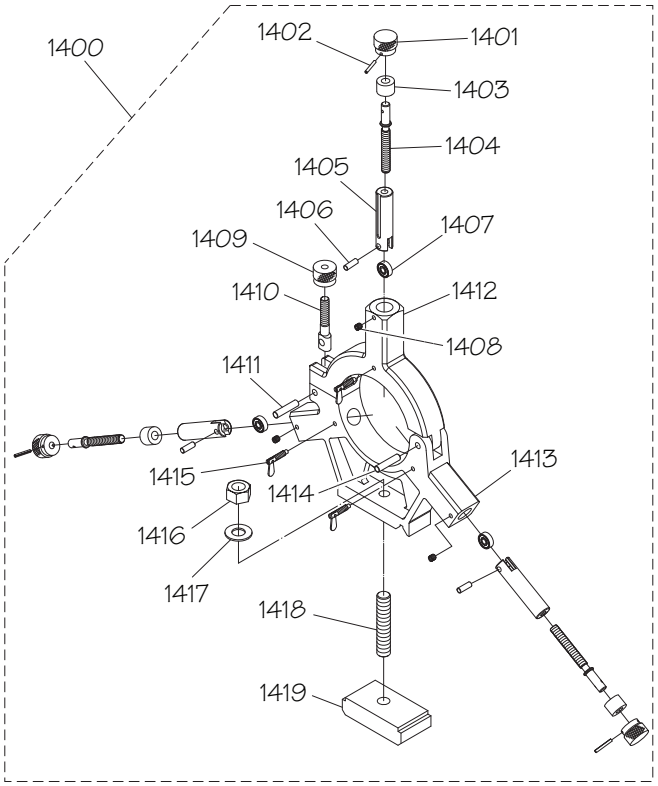

REF	PART #	DESCRIPTION
1400	PSB10531400	STEADY REST ASSEMBLY
1401	PSB10531401	FINGER ADJUSTMENT KNOB
1402	PRP51M	ROLL PIN 4 X 40
1403	PSB10531403	SPACER
1404	PSB10531404	FINGER ADJUSTMENT BOLT
1405	PSB10531405	FINGER
1406	PSB10531406	DOWEL PIN
1407	P627ZZ	BALL BEARING 627ZZ
1408	PSS20M	SET SCREW M8-1.25 X 8
1409	PSB10531409	CLAMP KNOB
1410	PSB10531410	CLAMP SCREW
1411	PSB10531411	DOWEL PIN
1412	PSB10531412	UPPER CASTING
1413	PSB10531413	LOWER CASTING
1414	PSB10531414	HINGE PIN
1415	PSB10531415	DOG POINT LEAF SCREW
1416	PN09M	HEX NUT M12-1.75
1417	PLW05M	LOCK WASHER 12MM
1418	PSB10531418	STUD-FT M12-1.75 X 75
1419	PSB10531419	CLAMP PLATE

Follow Rest

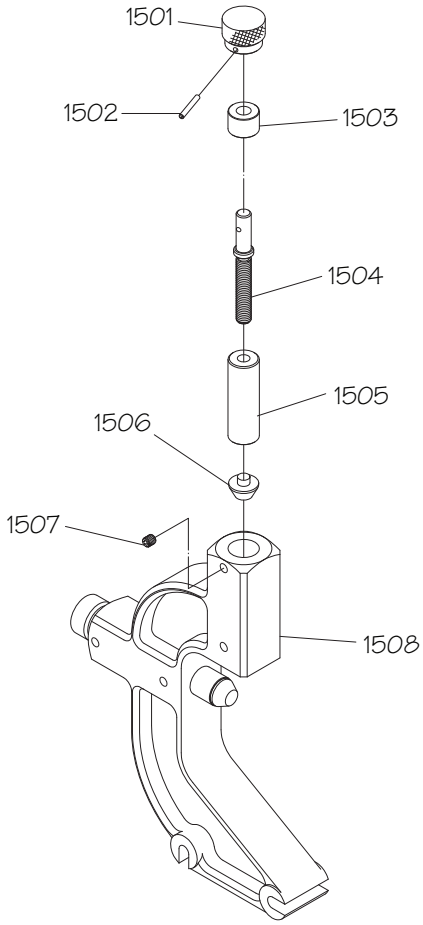

REF	PART #	DESCRIPTION
1500	PSB10531500	FOLLOW REST ASSEMBLY
1501	PSB10531401	FINGER ADJUSTMENT KNOB
1502	PRP51M	ROLL PIN 4 X 40
1503	PSB10531403	SPACER
1504	PSB10531504	FINGER ADJUSTMENT BOLT
1505	PSB10531505	FINGER
1506	PSB10531506	FINGER TIP
1507	PSS20M	SET SCREW M8-1.25 X 8
1508	PSB10531508	CASTING

Electrical

Electrical Cabinet

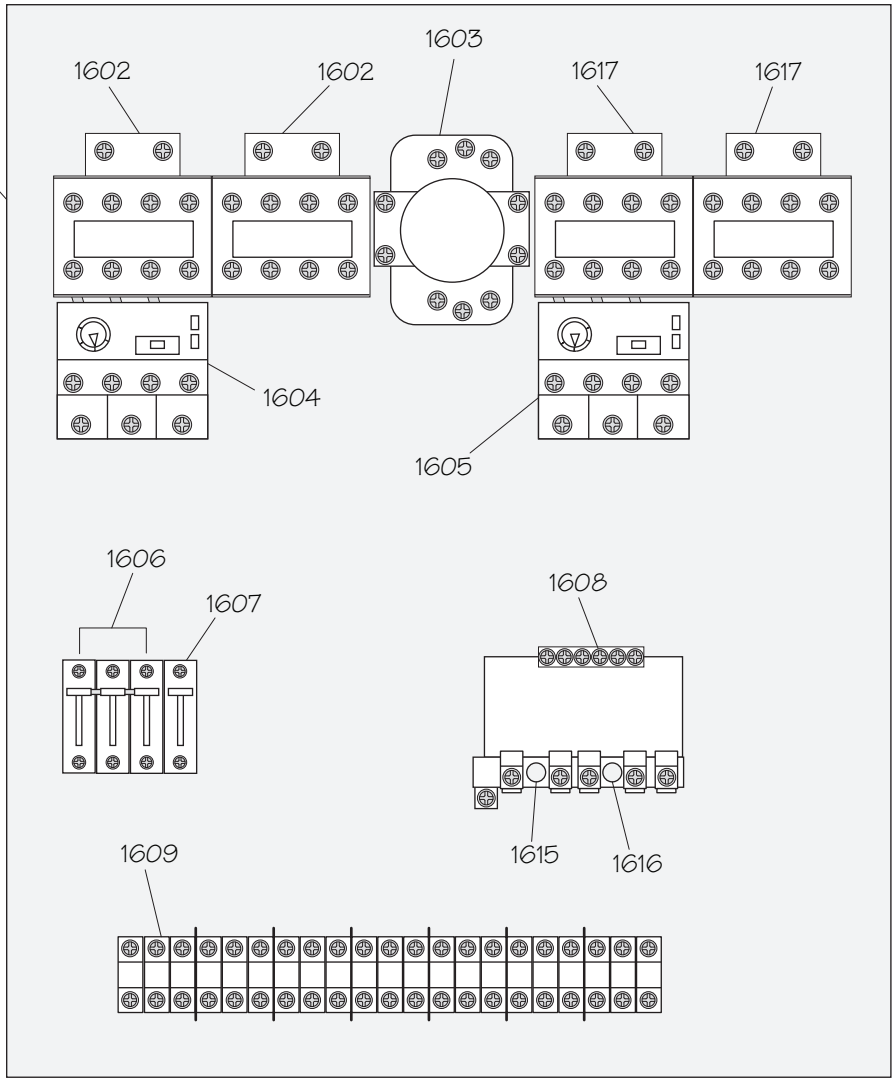

Control Panel

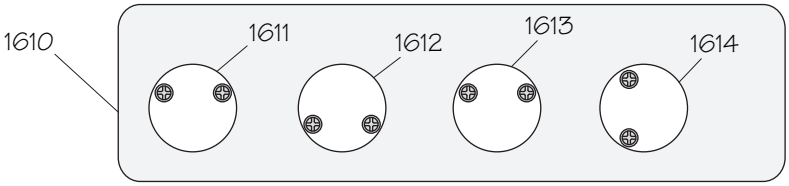

REF	PART #	DESCRIPTION
1601	PSB10531601	ELECTRICAL MOUNTING PLATE
1602	PSB10531602	CONTACTOR AB C2301 220V (SB1053)
1602	PSB1054F1602	CONTACTOR AB C1601 440V (SB1054F-55F)
1603	PSB10531603	MASTER POWER SWITCH
1604	PSB10531604	OL RELAY AB 193T 21-25A (SB1053)
1604	PSB1054F1604	OL RELAY AB 193T 16-24A (SB1054F-55F)
1605	PSB10531605	OL RELAY AB 193T 0.25-0.4A
1606	PSB10531606	CIRCUIT BREAKER 1492 SP D25-25A (SB1053)
1606	PSB1054F1606	CIRCUIT BREAKER 1492 SP D20-20A (SB1054F-55F)
1607	PSB10531607	CIRCUIT BREAKER 1492 SP D6-6A

REF	PART #	DESCRIPTION
1608	PSB10531608	TRANSFORMER LIANG SP-TBSW
1609	PSB10531609	TERMINAL BLOCK 3 POST
1610	PSB10531610	CONTROL PANEL PLATE
1611	PSB10531611	JOG BUTTON
1612	PSB10531612	EMERGENCY STOP BUTTON
1613	PSB10531613	POWER LAMP
1614	PSB10531614	CUTTING FLUID SWITCH
1615	PSB10531615	FUSE 4A 250V TIME-DELAY 5 X 20MM
1616	PSB10531616	FUSE 0.5A 250V TIME-DELAY 5 X 20MM
1617	PSB10531617	CONTACTOR AB C09400

Accessories

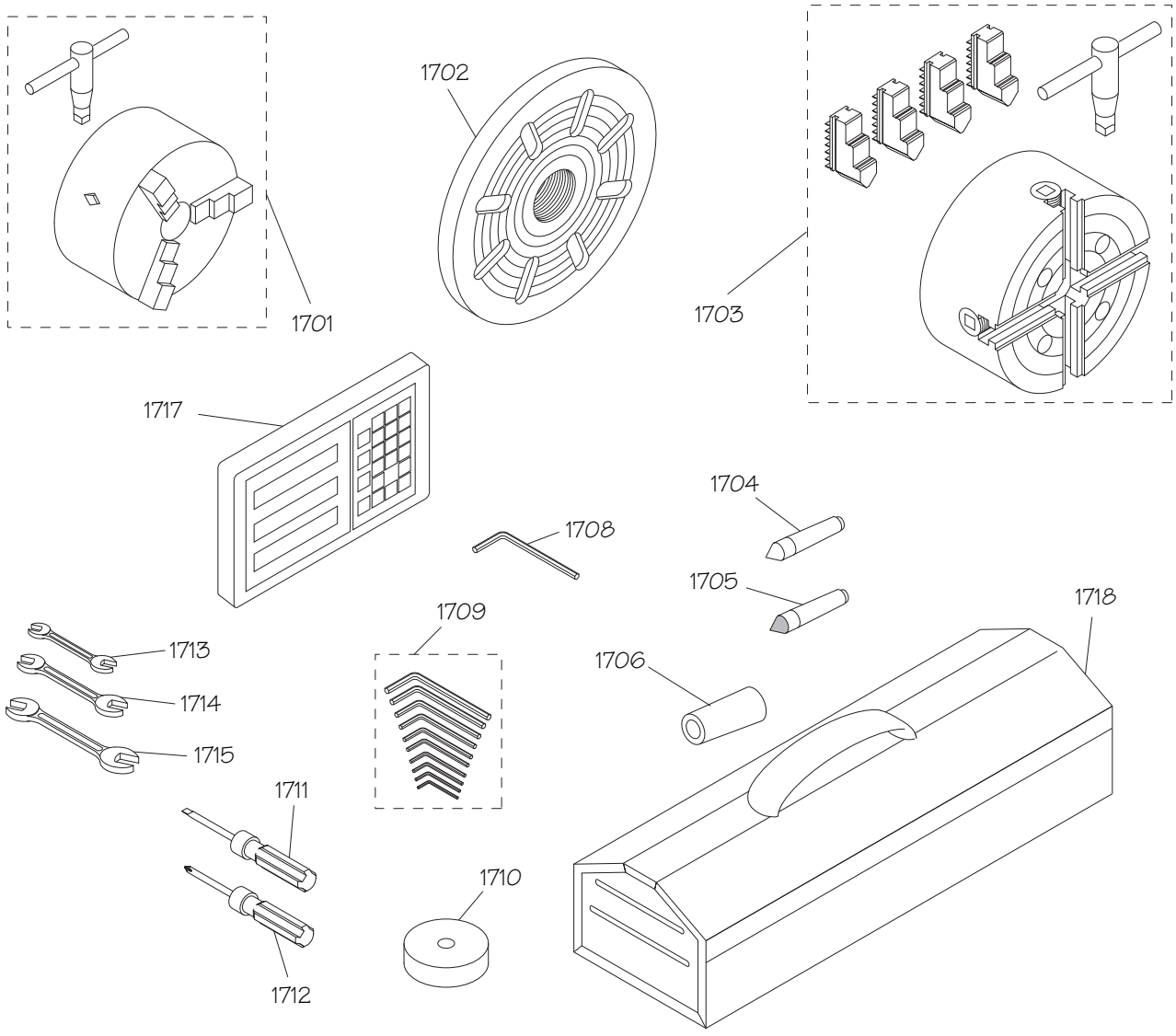

REF	PART #	DESCRIPTION
1701	SB1309	3-JAW CHUCK ASSEMBLY 9"
1702	PSB10531702	FACEPLATE ASSEMBLY 12"
1703	SB1228	4-JAW CHUCK ASSEMBLY 10"
1704	PSB10531704	DEAD CENTER MT#4
1705	PSB10531705	DEAD CENTER CARBIDE-TIPPED MT#4
1706	PSB10531706	SPINDLE SLEEVE MT#6-MT#4
1707	PSB10531707	TOOL BOX
1708	PAW10M	HEX WRENCH 10MM
1709	PAW1510M	HEX WRENCH SET 1.5-10MM

REF	PART #	DESCRIPTION
1710	PSB10531710	FOOT CAST-IRON
1711	PSDF2	STANDARD SCREWDRIVER #2
1712	PSDP2	PHILLIPS SCREWDRIVER #2
1713	PWR1012	WRENCH 10/12MM
1714	PWR1417	WRENCH 14/17MM
1715	PWR2224	WRENCH 22/24MM
1717	PSB10531717	DRO ASSEMBLY FAGOR 20I-T 2-AXIS
1718	PSB10531718	TOOL BOX

Front Machine Labels

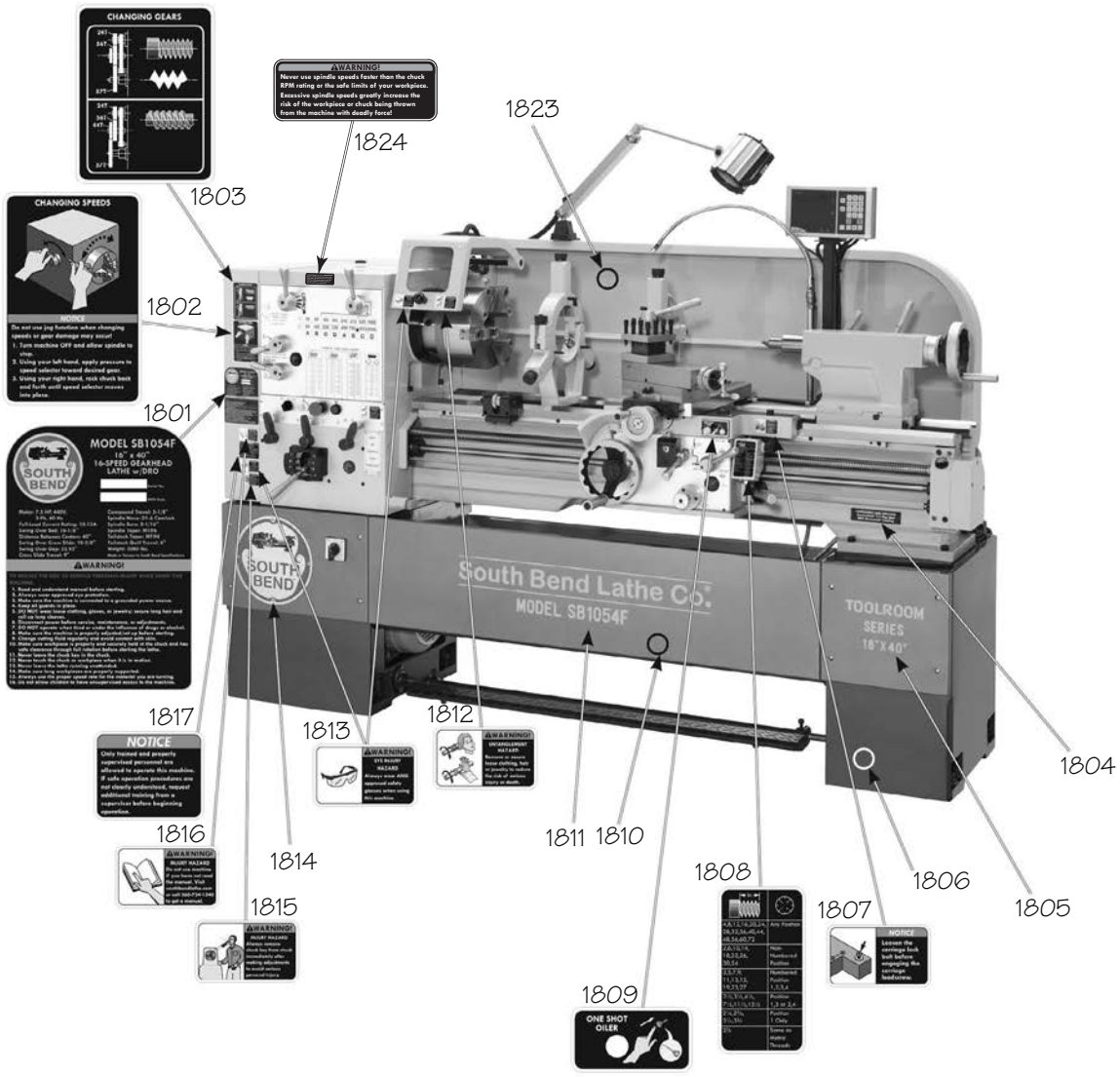

REF	PART #	DESCRIPTION
1801	PSB10531801	MACHINE ID LABEL (SB1053)
1801	PSB1054F1801	MACHINE ID LABEL (SB1054F)
1801	PSB1055F1801	MACHINE ID LABEL (SB1055F)
1802	PSB10531802	CHANGING SPEEDS LABEL
1803	PSB10531803	CHANGING GEARS LABEL
1804	PSB10531804	BEDWAY DESCRIPTION LABEL
1805	PSB10531805	TOOLROOM SERIES LABEL (SB1053)
1805	PSB1054F1805	TOOLROOM SERIES LABEL (SB1054F)
1805	PSB1055F1805	TOOLROOM SERIES LABEL (SB1055F)
1806	PSBPAINT03	SB DARK BLUE TOUCH-UP PAINT
1807	PSB10531807	CARRIAGE LOCK NOTICE LABEL
1808	PSB10531808	DIAL CHART LABEL
1809	PSB10531809	ONE-SHOT OILER LABEL

REF	PART #	DESCRIPTION
1810	PSBPAINT02	SB LIGHT BLUE TOUCH-UP PAINT
1811	PSB10531811	LOGO MODEL NUMBER LABEL (SB1053)
1811	PSB1054F1811	LOGO MODEL NUMBER LABEL (SB1054F)
1811	PSB1055F1811	LOGO MODEL NUMBER LABEL (SB1055F)
1812	PSBLABEL08HL	ENTANGLEMENT HAZARD LABEL
1813	PSBLABEL04HL	SAFETY GLASSES LABEL
1814	SB1322	SOUTH BEND NAMEPLATE
1815	PSB10531815	CHUCK KEY HAZARD LABEL
1816	PSBLABEL01HL	READ MANUAL LABEL
1817	PSB10531817	PROPER PERSONNEL NOTICE LABEL
1823	PSBPAINT01	SB GRAY TOUCH-UP PAINT
1824	PSB10531824	CHUCK SPEED LABEL

Rear & Side Machine Labels

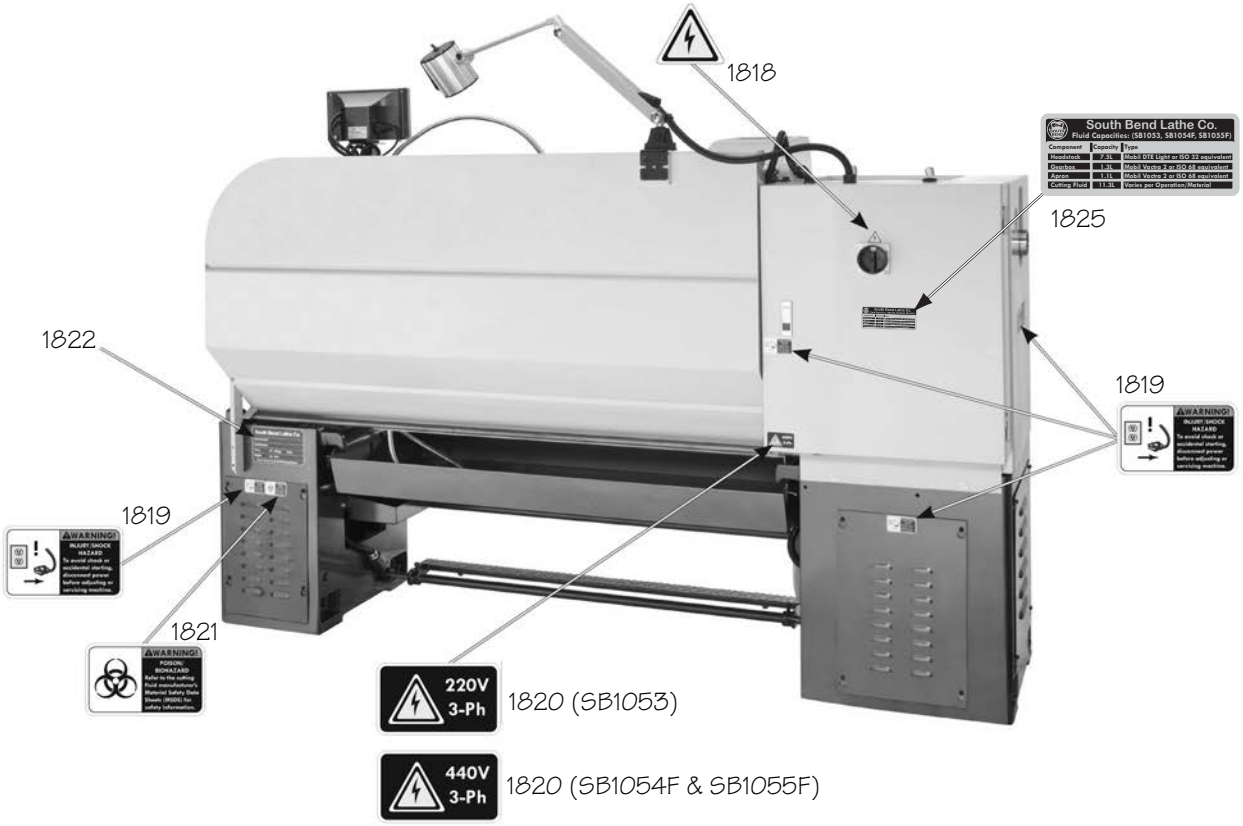

REF	PART #	DESCRIPTION
1818	PSBLABEL15M	ELECTRICITY LABEL
1819	PSBLABEL02HL	DISCONNECT POWER LABEL
1820	PSB10531820	220V 3PH LABEL (SB1053)
1820	PSB1054F1820	440V 3PH LABEL (SB1054F & SB1055F)
1821	PSBLABEL06HL	POISON/BIOHAZARD LABEL

REF	PART #	DESCRIPTION
1822	PSB10531822	MACHINE DATA PLATE (SB1053)
1822	PSB1054F1822	MACHINE DATA PLATE (SB1054F)
1822	PSB1055F1822	MACHINE DATA PLATE SB1055F)
1825	PSB10531825	FLUID CAPACITIES LABEL

⚠WARNING

The safety labels provided with your machine are used to make the operator aware of the machine hazards and ways to prevent injury. The owner of this machine MUST maintain the original location and readability of these safety labels. If any label is removed or becomes unreadable, REPLACE that label before using the machine again. Contact South Bend Lathe Co. at (360) 734-1540 or www.southbendlathe.com to order new labels.