M1040-41 Parts Breakdown

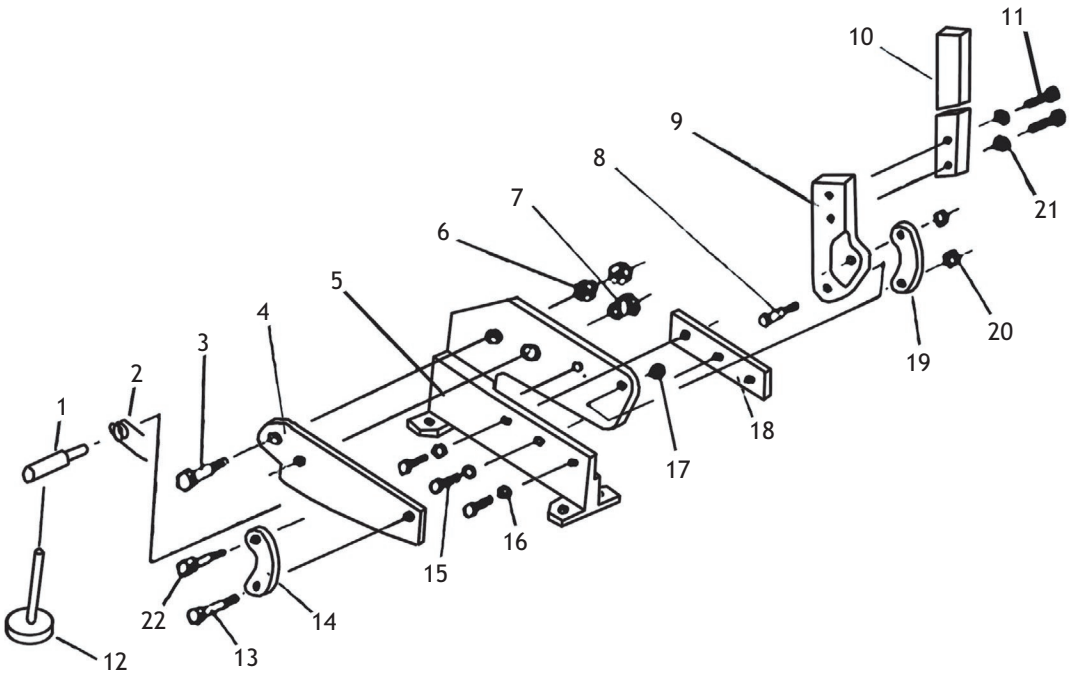

M1040 Parts List

REF	PART #	DESCRIPTION
1	XM1040001	SPRING SUPPORT ROD
2	XM1040002	TORSION SPRING
3	XM1040003	SPECIAL HEX BOLT M14-1.5 X 40
4	XM1040004	UPPER BLADE 8"
5	XM1040005	SHEAR BODY (M1040)
6	XPN42M	HEX NUT M14-1.5
7	XM1040007	BLADE FIXING PIN
8	XM1040008	SPECIAL HEX BOLT M10-1.5 X 50
9	XM1040009	HANDLE MOUNTING PLATE
10	XM1040010	HANDLE
11	XPB31M	HEX BOLT M10-1.5 X 40
12	XM1040012	THREADED STOP M12-1.75 X 165
13	XM1040013	SPECIAL HEX BOLT M8-1.25 X 40
14	XM1040014	PIVOT ARM
15	XPB74M	HEX BOLT M10-1.5 X 20
16	XPW04M	FLAT WASHER 10MM
17	XPN02M	HEX NUT M10-1.5
18	XM1040018	LOWER BLADE 8"
19	XM1040019	PIVOT ARM
20	XPN03M	HEX NUT M8-1.25
21	XPW04M	FLAT WASHER 10MM
22	XM1040022	THREADED ROD M8-1.25 x 40

M1041 Parts List

REF	PART #	DESCRIPTION
1	XM1041001	SPRING SUPPORT ROD
2	XM1041002	TORSION SPRING
3	XM1041003	SPECIAL HEX BOLT M18-1.5 X 50
4	XM1041004	UPPER BLADE 12"
5	XM1041005	SHEAR BODY (M1041)
6	XPN15M	HEX NUT M18-1.5
7	XM1041007	BLADE FIXING PIN
8	XM1041008	SPECIAL HEX BOLT M14-1.5 X 60
9	XM1041009	HANDLE MOUNTING PLATE
10	XM1041010	HANDLE
11	XPB35M	HEX BOLT M12-1.75 X 40
12	XM1041012	THREADED STOP M12-1.75 X 165
13	XM1041013	SPECIAL HEX BOLT M14-1.5 X 60
14	XM1041014	PIVOT ARM
15	XPB49M	HEX BOLT M12-1.75 X 20
16	XPW06M	FLAT WASHER 12MM
17	XPN42M	HEX NUT M14-1.5
18	XM1041018	LOWER BLADE 12"
19	XM1041019	PIVOT ARM
20	XPN42M	HEX NUT M14-1.5
21	XPW06M	FLAT WASHER 12MM
22	XM1041022	THREADED ROD M14-1.5 X 60

COPYRIGHT © MAY, 2006 BY WOODSTOCK INTERNATIONAL, INC.
WARNING: NO PORTION OF THIS MANUAL MAY BE REPRODUCED IN ANY SHAPE OR FORM WITHOUT THE WRITTEN APPROVAL OF WOODSTOCK INTERNATIONAL, INC.
#8237JK **Printed in China**