MODEL H5387
3 HP ELECTRIC MOTOR
INSTRUCTIONS

For questions or help with this product contact Tech Support at (570) 546-9663 or techsupport@grizzly.com

Model H5387 Specifications

Power	3 HP
Cycle	60 Hz
Voltage	220V
Amps	13.5A
Speed	3450 RPM
Phase	Single-Phase
Class	B

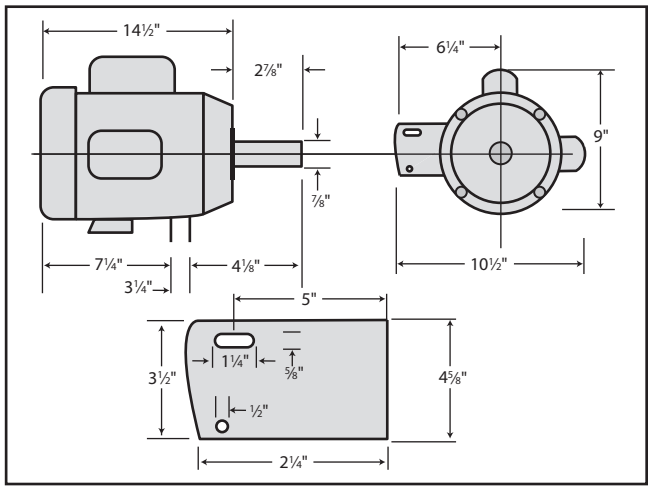

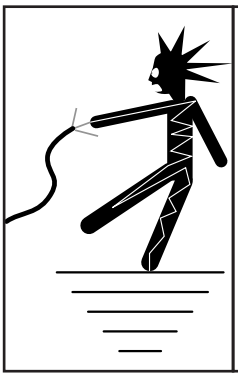

⚠WARNING

Electrocution or fire could result if this motor is not grounded correctly or if your wire connections do not comply with local and state codes. Ensure compliance by checking with an electrician!

Replaceable Parts

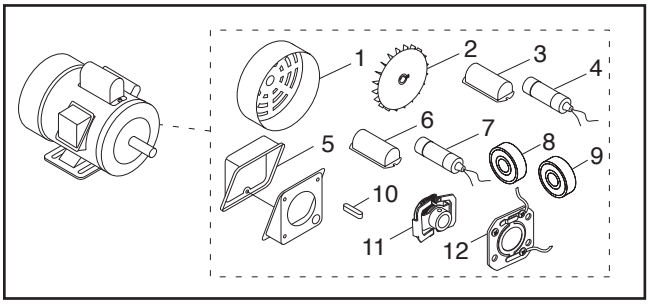

REF	PART #	DESCRIPTION
1	PH5387001	MOTOR FAN COVER
2	PH5387002	MOTOR FAN
3	PH5387003	S CAPACITOR COVER
4	PH5387004	S CAPACITOR 600M 125V 1-3/4 X 3-3/8
5	PH5387005	JUNCTION BOX
6	PH5387006	RUN CAPACITOR COVER
7	PH5387007	R CAPACITOR 30M 250V 1-3/8 X 2-3/8
8	PH5387008	BALL BEARING 6205ZZ
9	PH5387009	BALL BEARING 6203ZZ
10	PH5387010	KEY 5 X 5 X 35
11	PH5387011	CENTRIFUGAL SWITCH 3450 RPM
12	PH5387012	CONTACT PLATE

Making Wire Connections

If you are unsure how to attach wires to terminals, DO NOT continue. Contact an electrician for assistance. Connecting wires improperly may cause them to come loose or contact other wires, which can cause electrocution, fire, or a short.

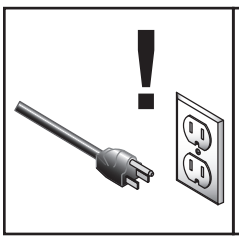

⚠WARNING

Disconnect power when replacing motor. Failure to do this may result in serious personal injury.

COPYRIGHT © NOVEMBER, 2013 BY GRIZZLY INDUSTRIAL, INC., REVISED OCTOBER, 2024 (LW)
NO PORTION OF THIS INSTRUCTION SHEET MAY BE REPRODUCED IN ANY SHAPE OR FORM WITHOUT THE WRITTEN APPROVAL OF GRIZZLY INDUSTRIAL, INC.
(FOR MODELS MFD. SINCE 08/24) #DM16090 PRINTED IN TAIWAN V2.10.24

******Keep for Future Reference******

H5387 Wiring Diagram



COLOR KEY

BLACK	Bk
WHITE	Wt
GREEN	Gn
BLUE	Bl
GRAY	Gy

NOTICE

The motor wiring shown here is current at the time of printing, but it may not match your motor. Always use the wiring diagram inside the motor junction box.

