MODEL G2533
1 HP ELECTRIC MOTOR
INSTRUCTIONS

For questions or help with this product contact Tech Support at (570) 546-9663 or techsupport@grizzly.com

Model G2533 Specifications

Power	1 HP
Cycle	60 Hz
Voltage	110V/220V
Prewired	110V
Amps	12.6/6.3A
Speed	3450 RPM
Phase	Single-Phase
Class	E

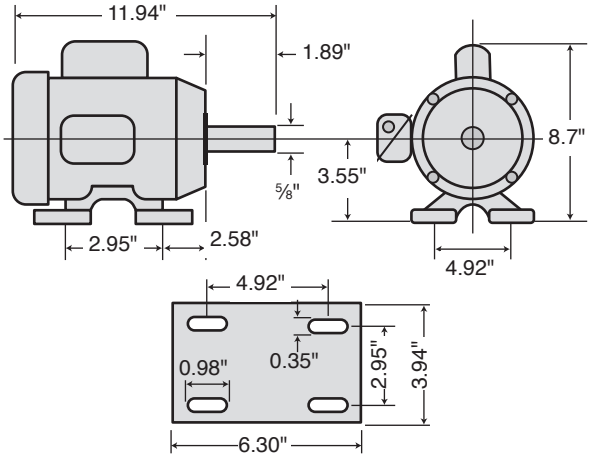



⚠WARNING

Electrocution or fire could result if this motor is not grounded correctly or if your wire connections do not comply with local and state codes. Ensure compliance by checking with an electrician!

Replaceable Parts

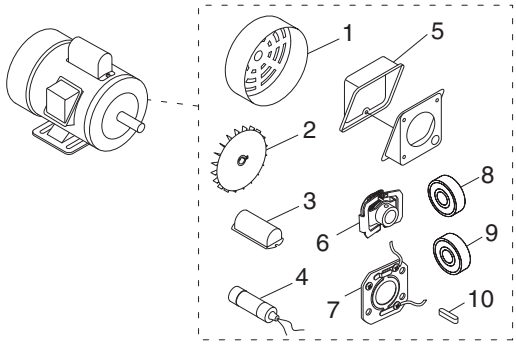

REF	PART #	DESCRIPTION
1	P2533001	MOTOR FAN COVER
2	P2533002	MOTOR FAN
3	P2533003	S CAPACITOR COVER
4	P2533004	S CAPACITOR 300M 125V 1-3/4 X 3-3/8
5	P2533005	JUNCTION BOX
6	P2533006	CENTRIFUGAL SWITCH 1/2-3450
7	P2533007	CONTACT PLATE
8	P2533008	BALL BEARING 6202ZZ
9	P2533009	BALL BEARING 6203ZZ
10	P2533010	KEY 3/16 X 3/16 X 1-1/4

Making Wire Connections

If you are unsure how to attach wires to terminals, DO NOT continue. Contact an electrician for assistance. Connecting wires improperly may cause electrocution, fire, or a short.

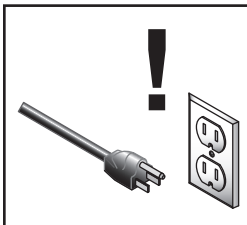

⚠WARNING

Disconnect power when replacing motor. Failure to do this may result in serious personal injury.

COPYRIGHT © JUNE, 2012 BY GRIZZLY INDUSTRIAL, INC., REVISED JUNE, 2024 (LW)
NO PORTION OF THIS INSTRUCTION SHEET MAY BE REPRODUCED IN ANY SHAPE OR FORM WITHOUT THE WRITTEN APPROVAL OF GRIZZLY INDUSTRIAL, INC.
(FOR MODELS MFD. SINCE 08/24) #KN15075 PRINTED IN TAIWAN V2.06.24

******Keep for Future Reference******

G2533 Wiring Diagram

