MODEL G0966
1-1/2 HP EXTREME-SERIES METAL DUST COLLECTOR W/SPARK ARRESTOR

OWNER'S MANUAL

(For models manufactured since 09/26)



COPYRIGHT © JUNE, 2023 BY GRIZZLY INDUSTRIAL, INC., REVISED NOVEMBER, 2026
WARNING: NO PORTION OF THIS MANUAL MAY BE REPRODUCED IN ANY SHAPE OR FORM WITHOUT THE WRITTEN APPROVAL OF GRIZZLY INDUSTRIAL, INC.
#JPCSLW22641 PRINTED IN TAIWAN V2.11.26

******Keep for Future Reference******

⚠ WARNING!

This manual provides critical safety instructions on the proper setup, operation, maintenance, and service of this machine/tool. Save this document, refer to it often, and use it to instruct other operators.

Failure to read, understand and follow the instructions in this manual may result in fire or serious personal injury—including amputation, electrocution, or death.

The owner of this machine/tool is solely responsible for its safe use. This responsibility includes but is not limited to proper installation in a safe environment, personnel training and usage authorization, proper inspection and maintenance, manual availability and comprehension, application of safety devices, cutting/sanding/grinding tool integrity, and the usage of personal protective equipment.

The manufacturer will not be held liable for injury or property damage from negligence, improper training, machine modifications or misuse.

⚠ WARNING!

Some dust created by power sanding, sawing, grinding, drilling, and other construction activities contains chemicals known to the State of California to cause cancer, birth defects or other reproductive harm. Some examples of these chemicals are:

- **Lead from lead-based paints.**
- **Crystalline silica from bricks, cement and other masonry products.**
- **Arsenic and chromium from chemically-treated lumber.**

Your risk from these exposures varies, depending on how often you do this type of work. To reduce your exposure to these chemicals: Work in a well ventilated area, and work with approved safety equipment, such as those dust masks that are specially designed to filter out microscopic particles.

Table of Contents

INTRODUCTION 2
- Contact Info 2
- Manual Accuracy 2
- Identification 3
- Controls & Components 4
- Machine Data Sheet 5

SECTION 1: SAFETY 7
- Safety Instructions for Machinery 7
- Additional Safety for Metal Dust Collectors 9

SECTION 2: POWER SUPPLY 10
- Converting Voltage to 240V 12

SECTION 3: SETUP 14
- Needed for Setup 14
- Unpacking 14
- Inventory 14
- Site Considerations 15
- Lifting & Placing 16
- Assembly 16
- Air Supply 17
- Ducting System 17
- System Grounding 19
- Test Run 20

SECTION 4: OPERATIONS 21
- Operation 21

SECTION 5: ACCESSORIES 22

SECTION 6: MAINTENANCE 24
- Schedule 24
- Cleaning Exterior 24
- Cleaning Canister Filter 25
- Cleaning Spark Arrestor 26
- Emptying Main Dust Tray 26
- Cleaning Ducts 27
- Replacing HEPA Filter 28
- Replacing Canister Filter 29
- Cleaning Impeller 30

SECTION 7: SERVICE 31
- Troubleshooting 31

SECTION 8: PNEUMATIC SYSTEM 34
- Pneumatic System Diagram 34

SECTION 9: WIRING 35
- Wiring Safety Instructions 35
- Wiring Diagram 120V 36
- Wiring Diagram 240V 37

SECTION 10: PARTS 38
- Main 38
- Labels & Cosmetics 40

WARRANTY & RETURNS 41

INTRODUCTION

Contact Info

We stand behind our machines! If you have questions or need help, contact us with the information below. Before contacting, make sure you get the **serial number** and **manufacture date** from the machine ID label. This will help us help you faster.

Grizzly Technical Support
1815 W. Battlefield
Springfield, MO 65807
Phone: (570) 546-9663
Email: techsupport@grizzly.com

We want your feedback on this manual. What did you like about it? Where could it be improved? Please take a few minutes to give us feedback.

Grizzly Documentation Manager
P.O. Box 2069
Bellingham, WA 98227-2069
Email: manuals@grizzly.com

Manual Accuracy

We are proud to provide a high-quality owner's manual with your new machine!

We made every effort to be exact with the instructions, specifications, drawings, and photographs in this manual. Sometimes we make mistakes, but our policy of continuous improvement also means that **sometimes the machine you receive is slightly different than shown in the manual**.

If you find this to be the case, and the difference between the manual and machine leaves you confused or unsure about something, check our website for an updated version. We post current manuals and manual updates for free on our website at **www.grizzly.com**.

Alternatively, you can call our Technical Support for help. Before calling, make sure you write down the **manufacture date** and **serial number** from the machine ID label (see below). This information is required for us to provide proper tech support, and it helps us determine if updated documentation is available for your machine.

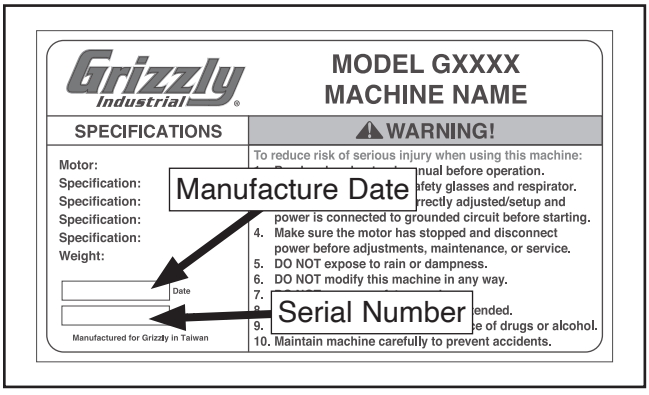

Identification

Become familiar with the names and locations of the controls and features shown below to better understand the instructions in this manual.

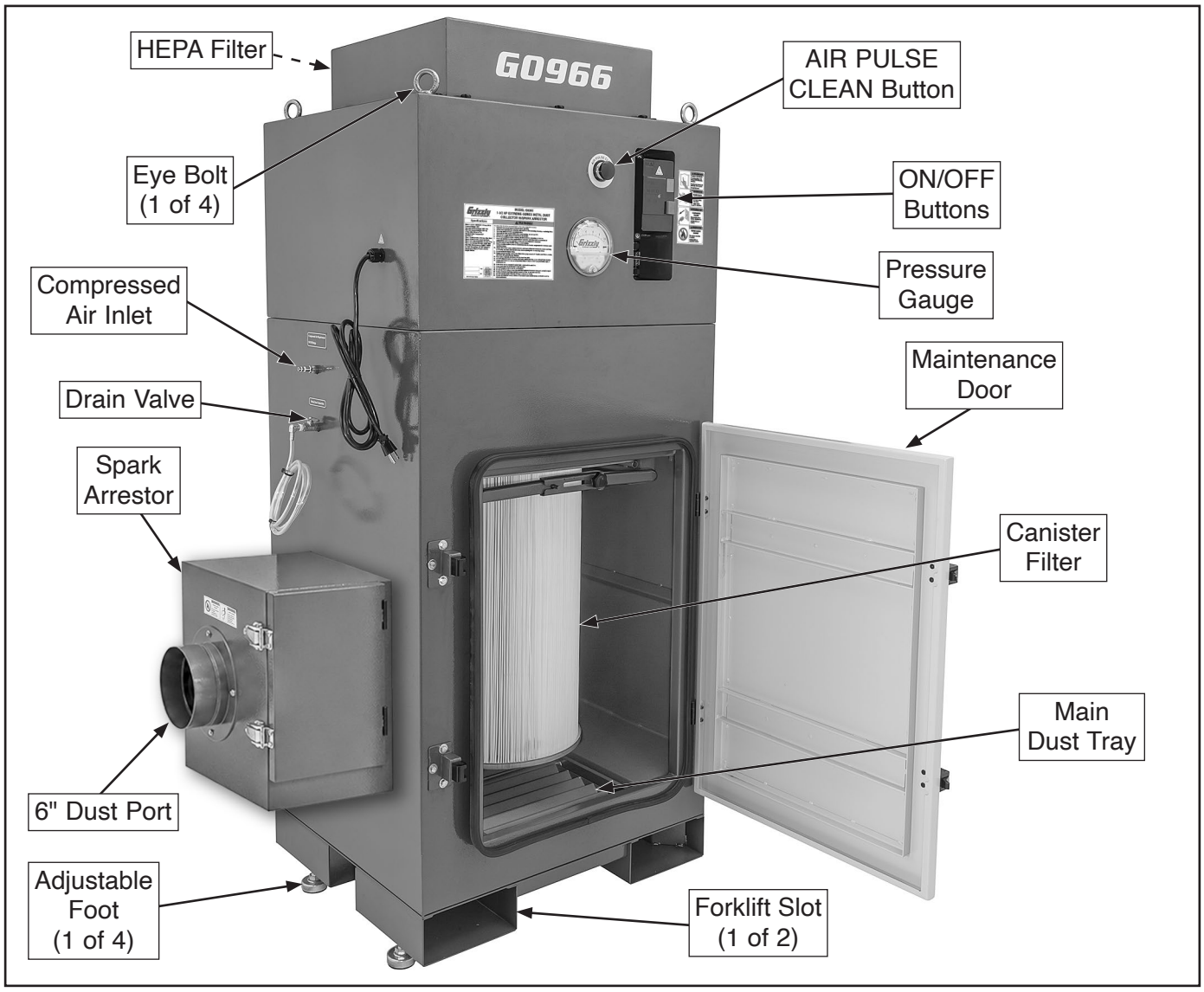

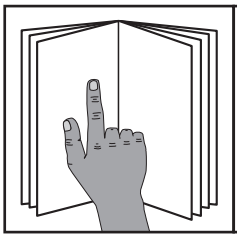

⚠WARNING

To reduce your risk of serious injury, read this entire manual BEFORE using machine.

Controls & Components

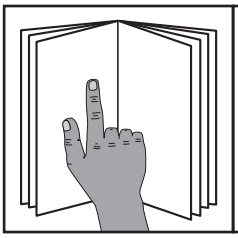

⚠WARNING

To reduce your risk of serious injury, read this entire manual BEFORE using machine.

⚠WARNING

Like all machinery there is potential danger when operating this machine. Accidents are frequently caused by lack of familiarity or failure to pay attention. Use this machine with respect and caution to decrease the risk of operator injury. If normal safety precautions are overlooked or ignored, serious personal injury may occur.

⚠CAUTION

No list of safety guidelines can be complete. Every shop environment is different. Always consider safety first, as it applies to your individual working conditions. Use this and other machinery with caution and respect. Failure to do so could result in serious personal injury, damage to equipment, or poor work results.

Refer to the following figures and descriptions to become familiar with the basic controls and components of this machine. Understanding these items and how they work will help you understand the rest of the manual and minimize your risk of injury when operating this machine.

Controls

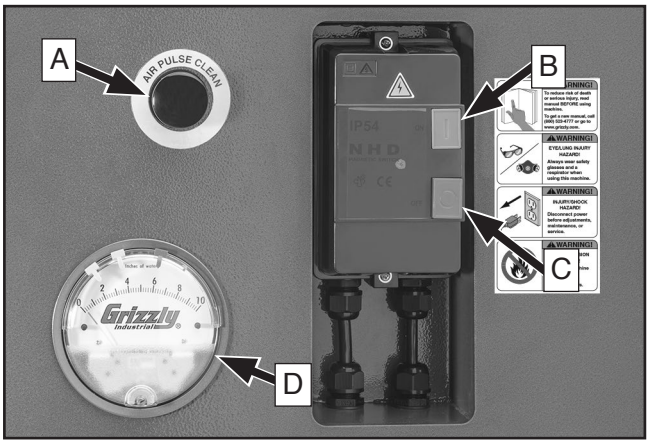

Figure 1. Controls.

A. AIR PULSE CLEAN Button: Pulses compressed air to clean canister.

B. ON Button: Turns machine ***ON*** when pressed.

C. OFF Button: Turns machine ***OFF*** when pressed.

D. Pressure Gauge: Displays vacuum pressure, indicating filter efficiency. Remove and clean canister filter when operating pressure exceeds 6" of water. Replace filter when cleaning does not improve performance.

Air Components

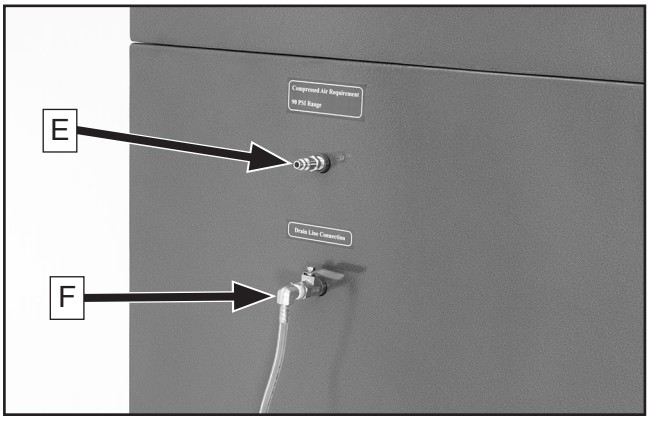

Figure 2. Air components.

E. Air Inlet: Accepts ¼" NPT industrial quick-connect coupler attached to proper air supply equipment. Incoming air pressure should not exceed 90 PSI.

F. Drain Valve: Drains built-up moisture from air pressure tank when ball valve is opened.

MACHINE DATA SHEET

Customer Service #: (570) 546-9663 · To Order Call: (800) 523-4777 · Fax #: (800) 438-5901

MODEL G0966
1-1/2 HP EXTREME-SERIES METAL DUST COLLECTOR W/SPARK ARRESTOR

Product Dimensions:

Weight	584 lbs.
Width (side-to-side) x Depth (front-to-back) x Height	45-1/2 x 29 x 74-1/2 in.
Footprint (Length x Width)	30 x 26 in.

Shipping Dimensions:

Type	Wood Crate
Content	Machine
Weight	710 lbs.
Length x Width x Height	48 x 34 x 84 in.
Must Ship Upright	Yes

Electrical:

Power Requirement	120V or 240V, Single-Phase, 60 Hz
Prewired Voltage	120V
Full-Load Current Rating	18A at 120V, 9A at 240V
Minimum Circuit Size	20A at 120V, 15A at 240V
Connection Type	Cord & Plug
Power Cord Included	Yes
Power Cord Length	118 in.
Power Cord Gauge	14 AWG
Plug Included	Yes
Included Plug Type	5-20 for 120V
Recommended Plug Type	6-15 for 240V
Switch Type	Magnetic Switch w/Overload Protection

Motors:

Main

Horsepower	1-1/2 HP
Phase	Single-Phase
Amps	18A/9A
Speed	3450 RPM
Type	TEFC Capacitor-Start Induction
Power Transfer	Direct
Bearings	Shielded & Permanently Lubricated
Centrifugal Switch/Contacts Type	Internal

Main Specifications:

Operation Information

Dust Collector Type	Metal
Airflow Performance	884 CFM at 2.2 in. SP
Max. Static Pressure (at 0 CFM)	8.3 in.
Main Inlet Size	6 in.
Machine Collection Capacity At One Time	1
Max. Material Collection Capacity	0.55 cu. ft.
Air Input Connection Type	Industrial Quick-Coupler Plug (Male)
Air Input Connection Size	1/4" NPT Threads, 1/4" Body
Tank Size	1 Gallon
Maximum Tank Pressure	90 PSI
Drain Valve Type	Ball Valve

Filter Information

Number of Filters	4
First-Stage Filter Type	Spark Arrestor Stainless Steel Mesh Filter
First-Stage Filter Size	305 x 305 x 4mm
First-Stage Filter Surface Area	0.784 sq. ft.
Second-Stage Filter Type	Spark Arrestor Aluminum Mesh Filter
Second-Stage Filter Size	305 x 305 x 45mm
Second-Stage Filter Surface Area	1.568 sq. ft.
Third-Stage Filter Type	Canister Filter
Third-Stage Filter Rating	0.2 - 2 Microns @ 95%
Third-Stage Filter Size	380 x 660mm
Third-Stage Filter Surface Area	161.4 sq. ft.
Fourth-Stage Filter Type	HEPA Filter
Fourth-Stage Filter Rating	0.3 Microns @ 99.99%
Fourth-Stage Filter Size	457 x 508 x 150mm
Fourth-Stage Filter Surface Area	134 sq. ft.

Impeller Information

Impeller Type	Radial Fin
Impeller Size	12.1 in.
Impeller Blade Thickness	0.16 in.

Construction

Body	Steel
Upper Chamber	Steel
Collection Drawer	Steel
Impeller	Aluminum
Paint Type/Finish	Powder Coated

Other Specifications:

Country of Origin	Taiwan
Warranty	1 Year
Approximate Assembly & Setup Time	30 Minutes
Serial Number Location	ID Label
ISO 9001 Factory	Yes

Features:

Filters Provide a Combined Surface Area of 295.4 Sq. Ft.
Flame-Resistant Canister Filter Collects 95% of Particles at 0.2 - 2 Microns
MERV-17 HEPA Filter Collects 99.99% of Particles at 0.3 Microns
Vacuum Pressure Gauge Indicates When to Clean/Replace Filters
Industrial Quick-Coupler Plug Connection and Air Pulse Button for Pneumatically Cleaning Canister Filter
Easy-to-Clean Removable Dust Trays
Spark Arrestor with Removable Filters

SECTION 1: SAFETY

For Your Own Safety, Read Instruction Manual Before Operating This Machine

The purpose of safety symbols is to attract your attention to possible hazardous conditions. This manual uses a series of symbols and signal words intended to convey the level of importance of the safety messages. The progression of symbols is described below. Remember that safety messages by themselves do not eliminate danger and are not a substitute for proper accident prevention measures. Always use common sense and good judgment.

⚠DANGER **Indicates an imminently hazardous situation which, if not avoided, WILL result in death or serious injury.**

⚠WARNING **Indicates a potentially hazardous situation which, if not avoided, COULD result in death or serious injury.**

⚠CAUTION **Indicates a potentially hazardous situation which, if not avoided, MAY result in minor or moderate injury. It may also be used to alert against unsafe practices.**

NOTICE **Alerts the user to useful information about proper operation of the machine to avoid machine damage.**

⚠WARNING

OWNER'S MANUAL. Read and understand this owner's manual BEFORE using machine.

TRAINED OPERATORS ONLY. Untrained operators have a higher risk of being hurt or killed. Only allow trained/supervised people to use this machine. When machine is not being used, disconnect power, remove switch keys, or lock-out machine to prevent unauthorized use—especially around children. Make your workshop kid proof!

DANGEROUS ENVIRONMENTS. Do not use machinery in areas that are wet, cluttered, or have poor lighting. Operating machinery in these areas greatly increases the risk of accidents and injury.

MENTAL ALERTNESS REQUIRED. Full mental alertness is required for safe operation of machinery. Never operate under the influence of drugs or alcohol, when tired, or when distracted.

ELECTRICAL EQUIPMENT INJURY RISKS. You can be shocked, burned, or killed by touching live electrical components or improperly grounded machinery. To reduce this risk, only allow qualified service personnel to do electrical installation or repair work, and always disconnect power before accessing or exposing electrical equipment.

DISCONNECT POWER FIRST. Always disconnect machine from power supply BEFORE making adjustments, changing tooling, or servicing machine. This prevents an injury risk from unintended startup or contact with live electrical components.

EYE PROTECTION. Always wear ANSI-approved safety glasses or a face shield when operating or observing machinery to reduce the risk of eye injury or blindness from flying particles. Everyday eyeglasses are NOT approved safety glasses.

⚠WARNING

WEARING PROPER APPAREL. Do not wear loose clothing, gloves, neckties, or jewelry that can become entangled in moving parts. Always tie back or cover long hair. Wear non-slip footwear to reduce risk of slipping and losing control or accidentally contacting cutting tool or moving parts.

HAZARDOUS DUST. Dust created by machinery operations may cause cancer, birth defects, or long-term respiratory damage. Be aware of dust hazards associated with each workpiece material. Always wear a NIOSH-approved respirator to reduce your risk.

HEARING PROTECTION. Always wear hearing protection when operating or observing loud machinery. Extended exposure to this noise without hearing protection can cause permanent hearing loss.

REMOVE ADJUSTING TOOLS. Tools left on machinery can become dangerous projectiles upon startup. Never leave chuck keys, wrenches, or any other tools on machine. Always verify removal before starting!

USE CORRECT TOOL FOR THE JOB. Only use this tool for its intended purpose—do not force it or an attachment to do a job for which it was not designed. Never make unapproved modifications—modifying tool or using it differently than intended may result in malfunction or mechanical failure that can lead to personal injury or death!

AWKWARD POSITIONS. Keep proper footing and balance at all times when operating machine. Do not overreach! Avoid awkward hand positions that make workpiece control difficult or increase the risk of accidental injury.

CHILDREN & BYSTANDERS. Keep children and bystanders at a safe distance from the work area. Stop using machine if they become a distraction.

GUARDS & COVERS. Guards and covers reduce accidental contact with moving parts or flying debris. Make sure they are properly installed, undamaged, and working correctly BEFORE operating machine.

FORCING MACHINERY. Do not force machine. It will do the job safer and better at the rate for which it was designed.

NEVER STAND ON MACHINE. Serious injury may occur if machine is tipped or if the cutting tool is unintentionally contacted.

STABLE MACHINE. Unexpected movement during operation greatly increases risk of injury or loss of control. Before starting, verify machine is stable and mobile base (if used) is locked.

USE RECOMMENDED ACCESSORIES. Consult this owner's manual or the manufacturer for recommended accessories. Using improper accessories will increase the risk of serious injury.

UNATTENDED OPERATION. To reduce the risk of accidental injury, turn machine ***OFF*** and ensure all moving parts completely stop before walking away. Never leave machine running while unattended.

MAINTAIN WITH CARE. Follow all maintenance instructions and lubrication schedules to keep machine in good working condition. A machine that is improperly maintained could malfunction, leading to serious personal injury or death.

DAMAGED PARTS. Regularly inspect machine for damaged, loose, or mis-adjusted parts—or any condition that could affect safe operation. Immediately repair/replace BEFORE operating machine. For your own safety, DO NOT operate machine with damaged parts!

MAINTAIN POWER CORDS. When disconnecting cord-connected machines from power, grab and pull the plug—NOT the cord. Pulling the cord may damage the wires inside. Do not handle cord/plug with wet hands. Avoid cord damage by keeping it away from heated surfaces, high traffic areas, harsh chemicals, and wet/damp locations.

EXPERIENCING DIFFICULTIES. If at any time you experience difficulties performing the intended operation, stop using the machine! Contact our Technical Support at (570) 546-9663.

Additional Safety for Metal Dust Collectors

⚠WARNING

Long-term respiratory damage, metal toxicity, cancer, or birth defects can occur from improperly using, setting up, or servicing machine, and using this machine without wearing a respirator. Explosions or fire can result if machine is used to capture incorrect materials or if dust/waste material is exposed to an ignition source. To reduce these risks, operator and bystanders MUST completely heed the warnings below.

USE FOR INTENDED PURPOSE. This metal dust collector is only designed to capture non-combustible or non-explosible metal particles. Collect only one type of metal/material at one time. DO NOT use to capture materials made from wood or wood products. DO NOT use it to collect lead, magnesium, niobium, tantalum, titanium, zirconium, hafnium, asbestos, crystalline silica, gypsum, or any other non-metal products. DO NOT use to capture welding fumes, gases, vapors, liquids, smoke, or ordinary combustible materials. DO NOT connect this dust collector to any machine using a coolant system.

WEAR PROPER PPE. Dust created from cutting, grinding, sanding, etc. may cause cancer, birth defects, or long-term respiratory damage. Be aware of the dust hazards, exposure limits, and toxicity associated with each type of workpiece material being collected. Very fine dust/particles may not be captured by filters and may become airborne in the work area. Anyone working in this same work area MUST wear a NIOSH-approved respirator and eye protection rated for the workpiece material.

RISK OF FIRE/EXPLOSIONS. To minimize static electrical charge, only connect with smooth-walled, sheet-metal ducting—do not use PVC. Entire collection system (collector + ductwork) must be bonded and grounded. Fine metal dust particles can ignite, depending on material type and circumstances. Know about and be prepared to safely fight a combustible metal fire by conducting a combustible screening test under Chapter 4 of NFPA 484. Keep machine away from pilot lights, open flames, or other ignition sources. NEVER use near chemical fumes or within an enclosed spray booth.

TOXIC METALS. Exposure (or over-exposure) to certain types of metal dusts or fumes can result in serious, potentially deadly health effects. To reduce this risk, research toxicity of metal types you work with and always seek to minimize/eliminate exposure to yourself and others.

CLEANING DRAWERS. Wear safety goggles and a NIOSH-approved respirator (rated for the metal type) when emptying and cleaning collection drawer and dust tray. Empty only into an approved, closed-top metal container, taking care to minimize amount of dust allowed to become airborne. Prevent spread of dust onto hands or clothing. Dispose of waste properly and according to local regulations for material type.

HIGH-HAZARD MATERIAL. This machine does NOT protect against highly hazardous materials, such as lead dust, asbestos fibers, or radioactive particles. These materials MUST be collected with special filtration equipment because of their high health/contamination hazard and difficulty of filtration. DO NOT attempt to collect such materials with this machine.

SAFE OPERATING LOCATION. DO NOT place metal dust collector where it can be exposed to rain or moisture. Exposure to water creates a shock hazard and will reduce life of machine.

PROPERLY MAINTAIN MACHINE. Keep machine in proper working condition to help ensure all guards and components function as intended. Perform routine inspections and all necessary maintenance indicated in owner's manual. Never operate machine with damaged or worn parts. Duct must be disconnected before service. Never operate machine with filters or covers removed.

SECTION 2: POWER SUPPLY

Availability

Before installing the machine, consider the availability and proximity of the required power supply circuit. If an existing circuit does not meet the requirements for this machine, a new circuit must be installed. To minimize the risk of electrocution, fire, or equipment damage, installation work and electrical wiring must be done by an electrician or qualified service personnel in accordance with all applicable codes and standards.



⚠WARNING

Electrocution, fire, shock, or equipment damage may occur if machine is not properly grounded and connected to power supply.

Full-Load Current Rating

The full-load current rating is the amperage a machine draws at 100% of the rated output power. On machines with multiple motors, this is the amperage drawn by the largest motor or sum of all motors and electrical devices that might operate at one time during normal operations.

Full-Load Current Rating at 120V ..... 18 Amps
Full-Load Current Rating at 240V ..... 9 Amps

The full-load current is not the maximum amount of amps that the machine will draw. If the machine is overloaded, it will draw additional amps beyond the full-load rating.

If the machine is overloaded for a sufficient length of time, damage, overheating, or fire may result—especially if connected to an undersized circuit. To reduce the risk of these hazards, avoid overloading the machine during operation and make sure it is connected to a power supply circuit that meets the specified circuit requirements.

Circuit Information

A power supply circuit includes all electrical equipment between the breaker box or fuse panel in the building and the machine. The power supply circuit used for this machine must be sized to safely handle the full-load current drawn from the machine for an extended period of time. (If this machine is connected to a circuit protected by fuses, use a time delay fuse marked D.)

⚠CAUTION

For your own safety and protection of property, consult an electrician if you are unsure about wiring practices or electrical codes in your area.

Note: *Circuit requirements in this manual apply to a dedicated circuit—where only one machine will be running on the circuit at a time. If machine will be connected to a shared circuit where multiple machines may be running at the same time, consult an electrician or qualified service personnel to ensure circuit is properly sized for safe operation.*

Circuit Requirements for 120V

This machine is prewired to operate on a power supply circuit that has a verified ground and meets the following requirements:

Nominal Voltage 110V, 115V, 120V
Cycle ..... 60 Hz
Phase ..... Single-Phase
Power Supply Circuit ..... 20 Amps
Plug/Receptacle ..... NEMA 5-20

Circuit Requirements for 240V

This machine can be converted to operate on a power supply circuit that has a verified ground and meets the requirements listed below. (Refer to **Voltage Conversion** instructions for details.)

Nominal Voltage 208V, 220V, 230V, 240V
Cycle ..... 60 Hz
Phase ..... Single-Phase
Power Supply Circuit ..... 15 Amps
Plug/Receptacle ..... NEMA 6-15

Grounding Requirements

This machine MUST be grounded. In the event of certain malfunctions or breakdowns, grounding reduces the risk of electric shock by providing a path of least resistance for electric current.

For 120V operation: This machine is equipped with a power cord that has an equipment-grounding wire and a grounding plug (see following figure). The plug must only be inserted into a matching receptacle (outlet) that is properly installed and grounded in accordance with all local codes and ordinances.

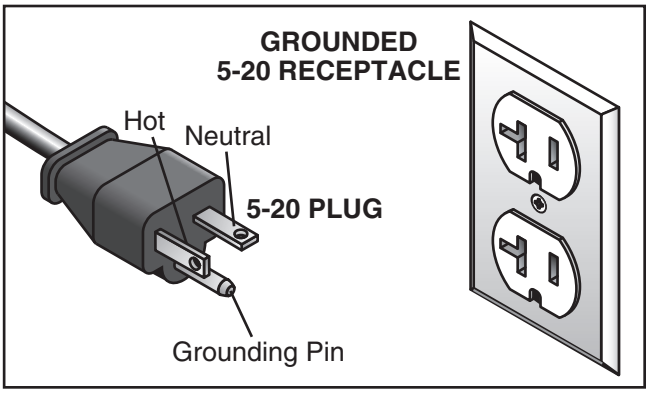

Figure 3. Typical 5-20 plug and receptacle.

⚠CAUTION

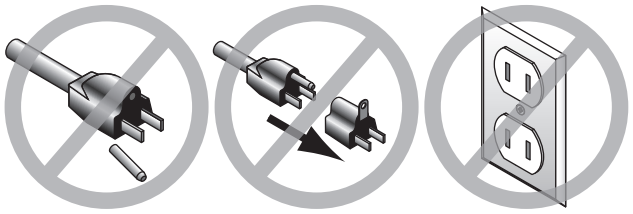

SHOCK HAZARD!
Two-prong outlets do not meet the grounding requirements for this machine. Do not modify or use an adapter on the plug provided—if it will not fit the outlet, have a qualified electrician install the proper outlet with a verified ground.

For 240V operation: The plug specified under "Circuit Requirements for 240V" on the previous page has a grounding prong that must be attached to the equipment-grounding wire on the included power cord. The plug must only be inserted into a matching receptacle (see following figure) that is properly installed and grounded in accordance with all local codes and ordinances.

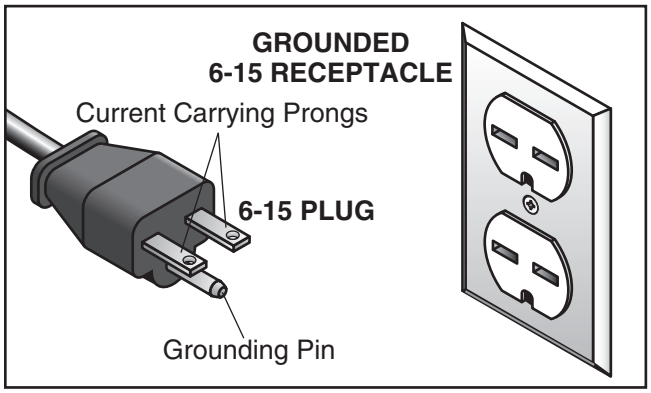

Figure 4. Typical 6-15 plug and receptacle.

Improper connection of the equipment-grounding wire can result in a risk of electric shock. The wire with green insulation (with or without yellow stripes) is the equipment-grounding wire. If repair or replacement of the power cord or plug is necessary, do not connect the equipment-grounding wire to a live (current carrying) terminal.

Check with a qualified electrician or service personnel if you do not understand these grounding requirements, or if you are in doubt about whether the machine is properly grounded. If you ever notice that a cord or plug is damaged or worn, disconnect it from power, and immediately replace it with a new one.

Extension Cords

We do not recommend using an extension cord with this machine. If you must use an extension cord, only use it if absolutely necessary and only on a temporary basis.

Extension cords cause voltage drop, which can damage electrical components and shorten motor life. Voltage drop increases as the extension cord size gets longer and the gauge size gets smaller (higher gauge numbers indicate smaller sizes).

Any extension cord used with this machine must be in good condition and contain a ground wire and matching plug/receptacle. Additionally, it must meet the following size requirements:

Minimum Gauge Size.....12 AWG
Maximum Length (Shorter is Better).....50 ft.

Converting Voltage to 240V

The voltage conversion MUST be performed by an electrician or qualified service personnel.

The voltage conversion procedure consists of replacing the magnetic switch, rewiring the motor, and installing the correct plug.

IMPORTANT: If the wiring diagram included inside the motor junction box conflicts with the wiring diagram on **Page 37**, the motor may have changed since this manual was printed. Use the diagram included with the motor instead.

Items Needed	Qty
Wire Cutter/Stripper	1
Open-End Wrench 24mm	1
Electrical Tape	As Needed
Wire Nut (14 AWG)	1
Phillips Head Screwdriver #2	1
Magnetic Switch Assy 240V (P0966016X)	1
NEMA 6-15 Plug	1

To convert voltage to 240V:

1. DISCONNECT MACHINE FROM POWER AND AIR!

2. Cut off existing 5-20 plug.

3. Loosen (2) Phillips head screws and remove magnetic switch cover (see **Figure 5**).

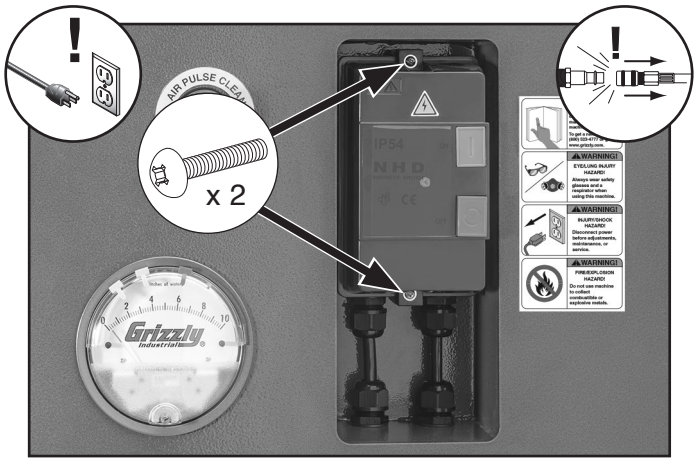

Figure 5. Location of switch cover screws.

4. Loosen (2) strain relief nuts (see **Figure 6**).

5. Disconnect incoming power, motor, and ground wires, then remove (2) Phillips head screws to separate switch housing from machine (see **Figure 6**).

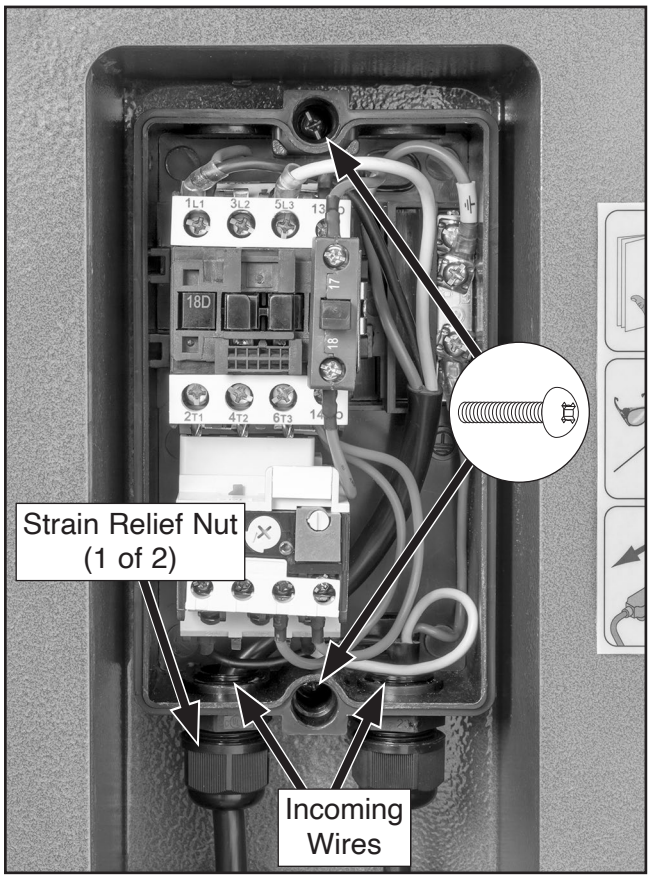

Figure 6. 120V magnetic switch assembly.

6. Remove 120V magnetic switch assembly from machine cabinet and replace with 240V magnetic switch. To connect motor and power cord wires to contactor, overload relay, and ground terminals, refer to **Wiring Diagram 240V** on **Page 37**.

7. Install magnetic switch cover.

8. Remove (12) knob bolts from HEPA filter cage (see **Figure 7**), then remove HEPA filter to access motor junction box. Refer to **Replacing HEPA Filter** on **Page 28** for detailed instructions.

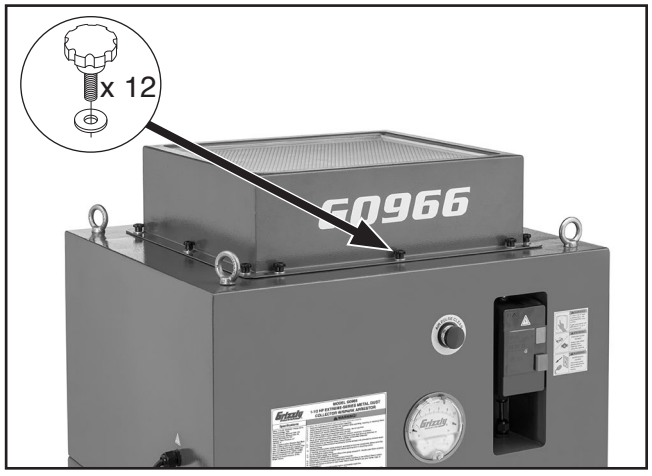

Figure 7. Location of HEPA filter cage knob bolts.

9. Open motor junction box and remove (2) wire nuts (see **Figure 8**).

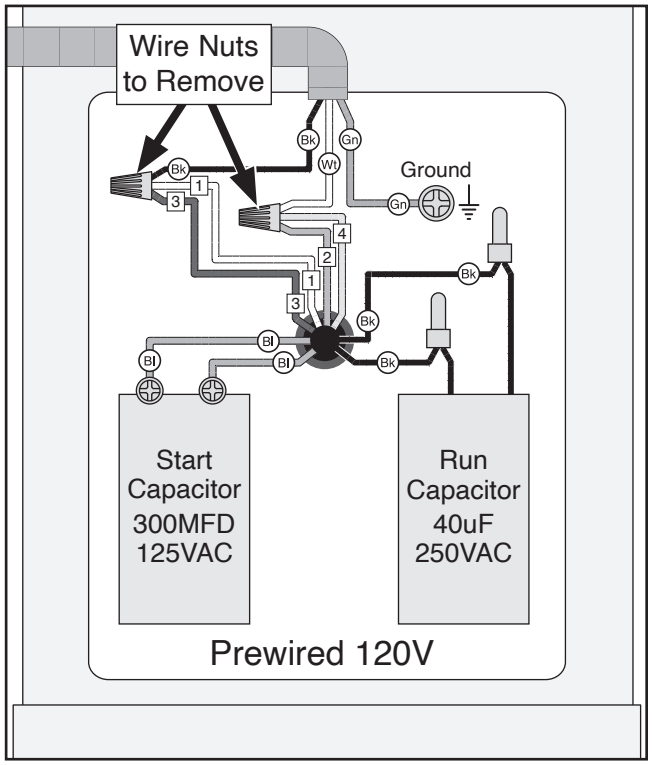

Figure 8. Motor wiring diagram (prewired 120V).

10. Use wire nuts to connect wires as indicated in **Figure 9**. Twist wire nuts onto their respective wires and wrap them with electrical tape so they will not come loose during operation.

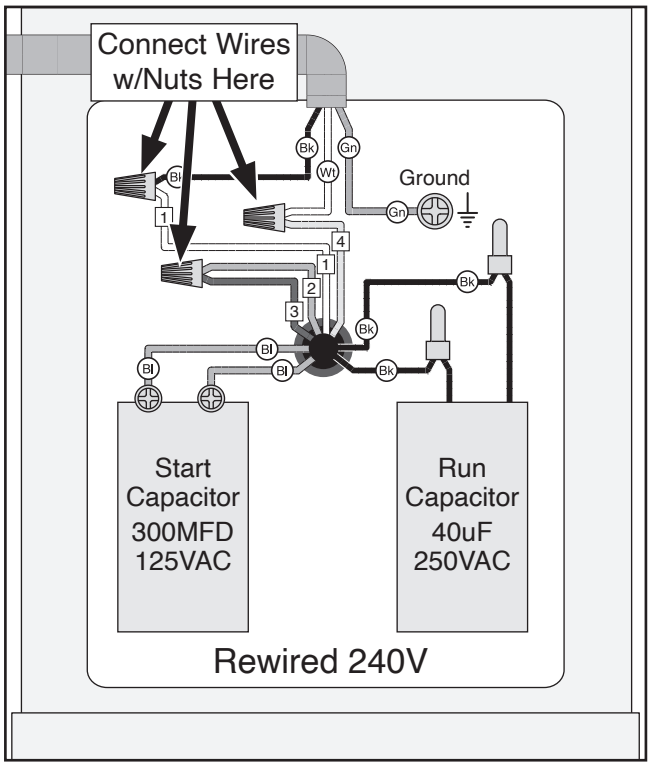

Figure 9. Motor rewired for 240V.

11. Close and secure motor junction box.

12. Install 6-15 plug on end of power cord, according to plug manufacturer's instructions.

— If plug manufacturer did not include instructions, wiring of generic NEMA 6-15 plug is illustrated on **Page 37**.

SECTION 3: SETUP

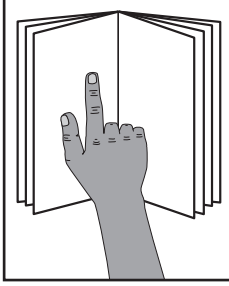

⚠WARNING

This machine presents serious injury hazards to untrained users. Read through this entire manual to become familiar with the controls and operations before starting the machine!



⚠WARNING

Wear safety glasses during the entire setup process!

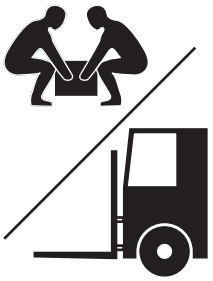

⚠WARNING

HEAVY LIFT!

Straining or crushing injury may occur from improperly lifting machine or some of its parts. To reduce this risk, get help from other people and use a forklift (or other lifting equipment) rated for weight of this machine.

Needed for Setup

The following items are needed, but not included, for the setup/assembly of this machine.

Description	Qty
• Additional People	As Needed
• Safety Glasses (for each person)	1
• Open-End Wrench 24mm	1
• Wrench or Socket ½"	1
• Lifting Straps (Rated for at least 890 lbs.)	4
• Lifting Equipment (Rated for at least 890 lbs.)	1
• Air Compressor (90 PSI)	1
• Air Hose with ¼" Industrial Quick-Connect Coupler	1

Unpacking

This machine was carefully packaged for safe transport. When unpacking, separate all enclosed items from packaging materials and inspect them for shipping damage. ***If items are damaged, please call us immediately at (570) 546-9663.***

IMPORTANT: Save all packaging materials until you are completely satisfied with the machine and have resolved any issues between Grizzly or the shipping agent. *You MUST have the original packaging to file a freight claim. It is also extremely helpful if you need to return your machine later.*

Inventory

The following is a list of items shipped with your machine. Before beginning setup, lay these items out and inventory them.

If any non-proprietary parts are missing (e.g. a nut or a washer), we will gladly replace them; or for the sake of expediency, replacements can be obtained at your local hardware store.

Box 1 (Figure 10)	Qty
A. G0966 Metal Dust Collector (Not Shown)	1
B. Dust Port 6"	1
C. Hex Bolts 5/16"-18 x ¾"	6
D. Flat Washers 5/16"	6

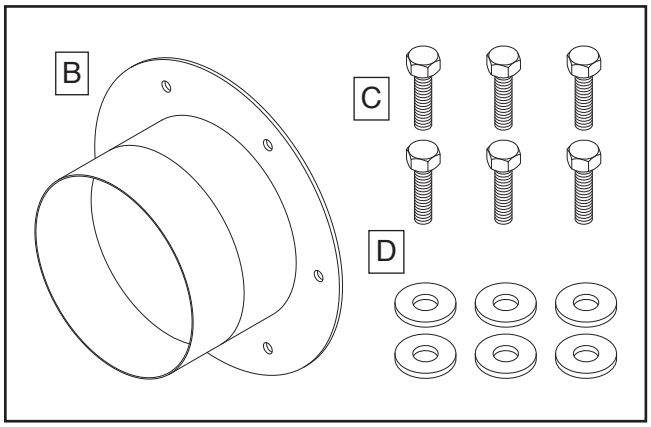

Figure 10. Inventory

Site Considerations

Weight Load

Refer to the **Machine Data Sheet** for the weight of your machine. Make sure that the surface upon which the machine is placed will bear the weight of the machine, additional equipment that may be installed on the machine, and the heaviest workpiece that will be used. Additionally, consider the weight of the operator and any dynamic loading that may occur when operating the machine.

Space Allocation

Consider the largest size of workpiece that will be processed through this machine and provide enough space around the machine for adequate operator material handling or the installation of auxiliary equipment. With permanent installations, leave enough space around the machine to open or remove doors/covers as required by the maintenance and service described in this manual. **See below for required space allocation.**

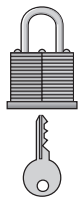

⚠CAUTION

Children or untrained people may be seriously injured by this machine. Only install in an access restricted location.

Physical Environment

The physical environment where the machine is operated is important for safe operation and longevity of machine components. For best results, operate this machine in a dry environment that is free from excessive moisture, hazardous chemicals, airborne abrasives, or extreme conditions. Extreme conditions for this type of machinery are generally those where the ambient temperature range exceeds 41°–104°F; the relative humidity range exceeds 20%–95% (non-condensing); or the environment is subject to vibration, shocks, or bumps.

Electrical Installation

Place this machine near an existing power source. Make sure all power cords are protected from traffic, material handling, moisture, chemicals, or other hazards. Make sure to leave enough space around machine to disconnect power supply or apply a lockout/tagout device, if required.

Lighting

Lighting around the machine must be adequate enough that operations can be performed safely. Shadows, glare, or strobe effects that may distract or impede the operator must be eliminated.

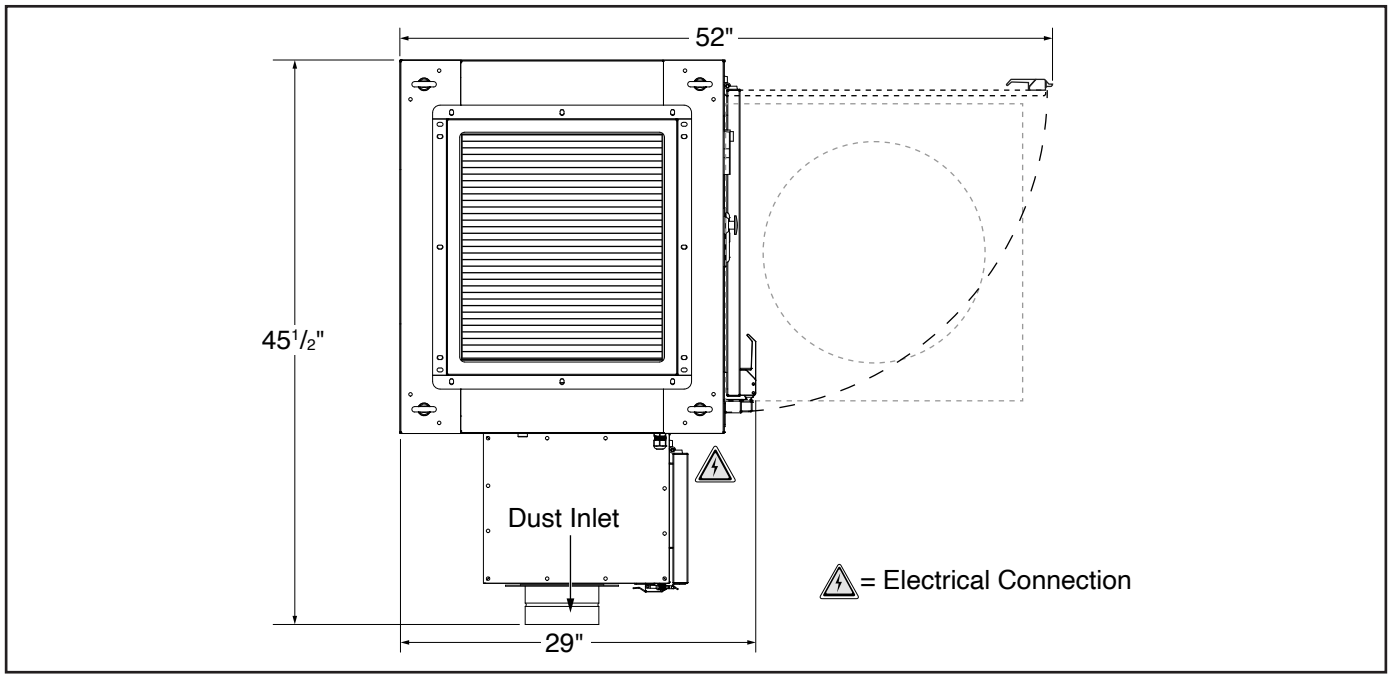

Figure 11. Minimum working clearances.

Lifting & Placing

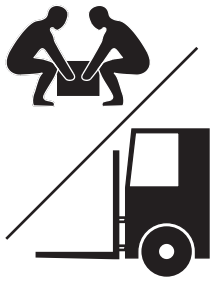

⚠WARNING

HEAVY LIFT!

Straining or crushing injury may occur from improperly lifting machine or some of its parts. To reduce this risk, get help from other people and use a forklift (or other lifting equipment) rated for weight of this machine.

Use a forklift and an assistant to lift the dust collector into place and adjust the leveling feet.

To lift and place machine:

1. Lift machine by using forklift slots or eye bolts (see **Figure 12**), and set in desired location.

2. With assistant's help, raise or lower adjustable feet as needed to stabilize machine (see **Figure 12**).

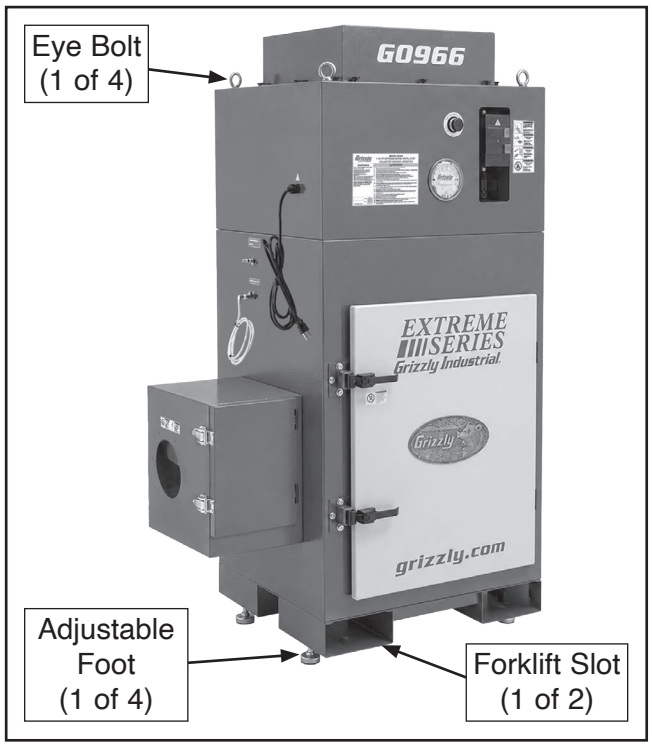

Figure 12. Lifting points and adjustable feet.

Assembly

The machine must be fully assembled before it can be operated. Before beginning the assembly process, refer to **Needed for Setup** and gather all listed items. To ensure the assembly process goes smoothly, first clean any parts that are covered or coated in heavy-duty rust preventative (if applicable).

To assemble machine:

1. Attach dust port with (6) 5/16"-18 x 3/4" hex bolts and 5/16" flat washers (see **Figure 13**).

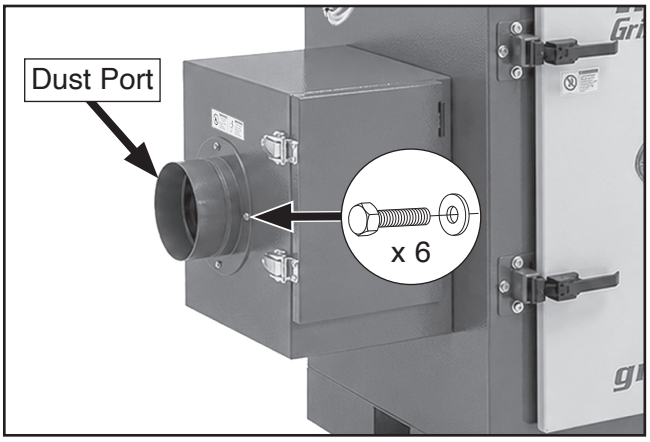

Figure 13. Dust port installed.

Air Supply

The Model G0966 uses compressed air to clean the canister filter. Use only clean, dry air. For best results, use an air line regulator and filter setup similar to the illustration shown in **Figure 14**. Compressed air supply to this machine should not exceed 90 PSI.

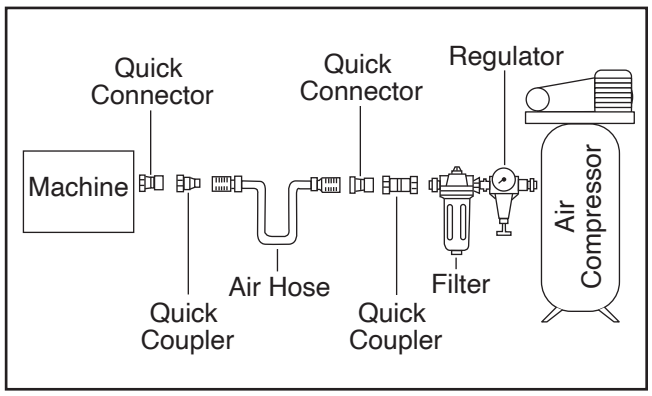

Figure 14. Example of air supply setup.

NOTICE

To reduce moisture buildup inside dust collector air tank, open drain valve to drain air and moisture at the end of each day.

Ducting System

Overview

This dust collector is designed *exclusively* to collect dry metal, chips, and swarf. **DO NOT** use this dust collector to collect wood dust or metal chips containing cutting fluid or coolant. Due to fire or explosion risk, **DO NOT** use this machine to collect combustible or explosive metals, aluminum, magnesium, niobium, tantalum, titanium, zirconium, hafnium, combustible liquids or fuels, gasoline, or oil- or solvent-based paints.

For best performance, place this dust collector as close to dust-generating machines as possible and install blast gates at the beginning of ducting lines. Only open one line at a time to focus maximum suction at the machine where dust is being collected.

Whatever system design you choose, always make sure to position ducting and collector away from any open flames (including pilot lights); otherwise you risk an explosion if material is dispersed into the air.

Duct Material

For best results, use only smooth-wall, sheet-metal ducting or flexible metal ducting to connect each machine.

The National Fire Protection Association (NFPA) warns of explosion or fire hazard because of static electrical buildup if plastic or non-conductive duct material is used for metal dust collection and is not completely grounded and bonded. We **DO NOT** recommend using any plastic duct material with this machine.

Metal Ducting

Advantages of metal ducting is its conductivity and that it does not contribute to static electrical charge build-up. However, static charges are still produced when particles strike other dust particles as they move through the duct. Since metal duct is a conductor, it can be grounded quite easily to dissipate any static electrical charges. Replace any plastic dust ports with sheet-metal equivalents, or bond sheet metal ducting to metal frame of machine with grounding wire.



⚠CAUTION

Always guard against static electrical buildup by grounding all collection lines.

There are a number of options when it comes to metal duct, but duct that is specially manufactured for metal dust collection is the best choice. When selecting your metal duct, choose high-quality metal duct with smooth-welded internal seams that will minimize airflow resistance. This type of duct usually connects to other ducts or elbows with a simple, self-sealing clamp, is very quick and easy to assemble, and can be readily dismantled and re-installed. This is especially important if you ever need to change things around in your shop or add more tools.

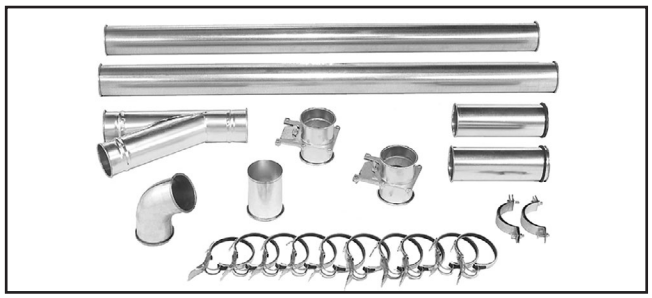

Figure 15. Examples of metal duct and components.

Avoid inferior metal duct that requires you to cut it to length and snap it together. This type of duct is time-consuming to install because it requires you to seal all the seams with silicone and screw the components on the ends with sheet-metal screws. Another disadvantage is the rough internal seams and crimped ends that unavoidably increase static pressure loss.

Flexible Duct

Flexible hose is generally used for short runs and at rigid duct-to-machine connections. The superior choice here is metal flex hose that is designed to be flexible, yet be as smooth as possible inside to reduce static pressure loss. DO NOT use dryer vent hose because it tends to collapse.

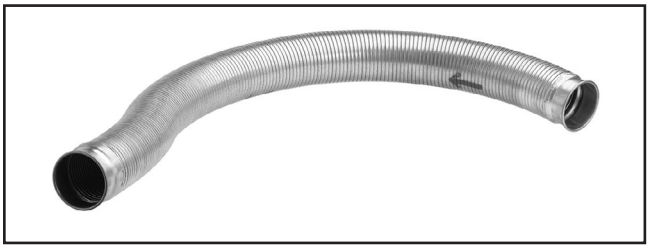

Figure 16. Example of flexible metal duct.

Ensure Required CFM at Machine

Since each machine produces a different amount of dust, the requirements for the minimum amount of CFM to move that dust is unique to the machine. Knowing this required CFM is important to gauging what size duct to use.

For best results when using a Y-inlet, we recommend installing blast gates to control airflow for each line near the Y-inlet.

Refer to **Figure 17** for a close estimation of the airflow each dust-producing machine requires. Machines that generate the most dust should be placed as close as possible to the dust collector.

Machine Dust Port Size	Approximate Required CFM
2"	100
2.5"	150
3"	250
4"	400
5"	600
6"	850
7"	1200
8"	1600
9"	2000
10"	2500

Figure 17. Approximate required airflow for machines based on dust port size.

System Grounding

To guard against static electrical buildup, we strongly recommend replacing any plastic dust ports on dust-producing machines with metal equivalents.

If you absolutely must use any plastic components, they must be completely grounded and bonded to the metal frame of a grounded machine by wrapping the flex hose with an external ground wire connected to both machines as shown in **Figure 18**. Ensure that each machine is continuously grounded to the grounding terminal in your electric service panel.

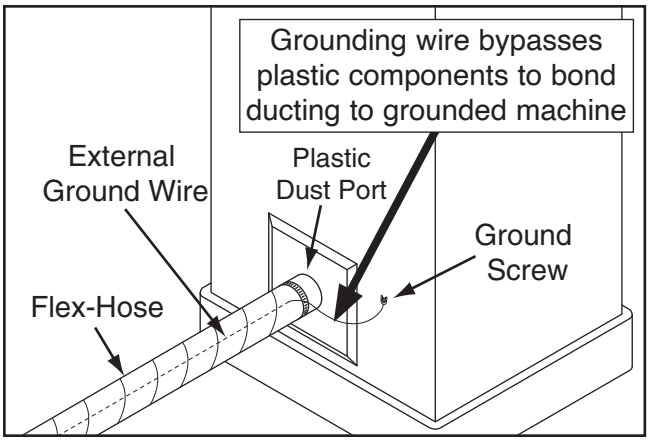

Figure 18. Example showing how to ground and bond ducting with a grounding wire.



⚠CAUTION

Always guard against static electrical build up by grounding all dust collection lines.

Test Run

Once assembly is complete, test run the machine to ensure it is properly connected to power and safety components are functioning correctly.

If you find an unusual problem during the test run, immediately stop the machine, disconnect it from power, and fix the problem BEFORE operating the machine again. The **Troubleshooting** table in the **SERVICE** section of this manual can help.

The Test Run consists of verifying the following: 1) The motor powers up and runs correctly, and 2) the AIR PULSE CLEAN system works properly.

NOTICE

Before starting dust collector, you must first connect it to ducting system with either a blast gate half-opened, a 2½" reducer, or intended machine connected to other end. This provides resistance necessary for proper machine function. Without this resistance, machine will draw too many amps from circuit and cause breaker to trip.

⚠WARNING

Serious injury or death can result from using this machine BEFORE understanding its controls and related safety information. DO NOT operate, or allow others to operate, machine until the information is understood.

NOTICE

If you are not experienced with this type of machine, WE STRONGLY RECOMMEND that you seek additional training outside of this manual. Read books/magazines or get formal training before beginning any projects. Regardless of the content in this section, Grizzly Industrial will not be held liable for accidents caused by lack of training.

To test run machine:

1. Connect dust collector to a half-opened blast gate, 2½" reducer, or intended machine, then clear all setup tools away from machine.

2. Connect machine to power supply.

3. Connect machine to air supply.

4. Turn machine ***ON***, verify motor operation, and then turn machine ***OFF*** (see **Figure 19**).

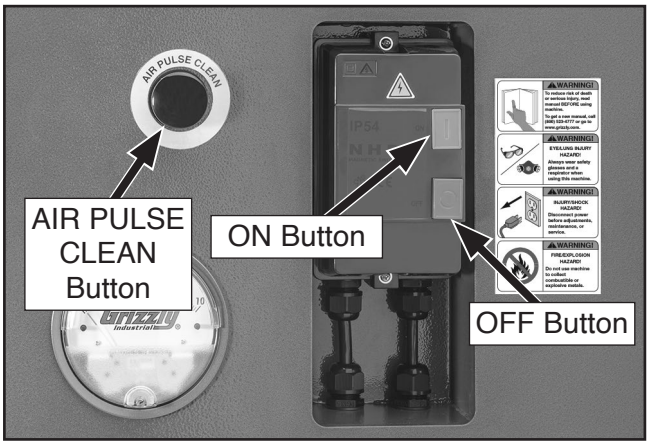

Figure 19. Location of controls.

Motor should run smoothly and without unusual problems or noises.

5. Press AIR PULSE CLEAN button, then release.

Pulse of air should be released into canister filter accompanied by a quick bang.

— If you suspect any problems, immediately turn machine ***OFF*** and disconnect it from power source and air supply. Refer to **Troubleshooting** on **Page 31** to identify and fix any problems. If you cannot solve the problem with the **Troubleshooting** guide, contact our Tech Support at (570) 546-9663 for assistance.

SECTION 4: OPERATIONS

Operation

The G0966 draws metal dust through the spark arrestor and into the canister filter. The metal dust then falls into the main dust tray (see **Figure 20**), while the filtered air is discharged through the HEPA filter.

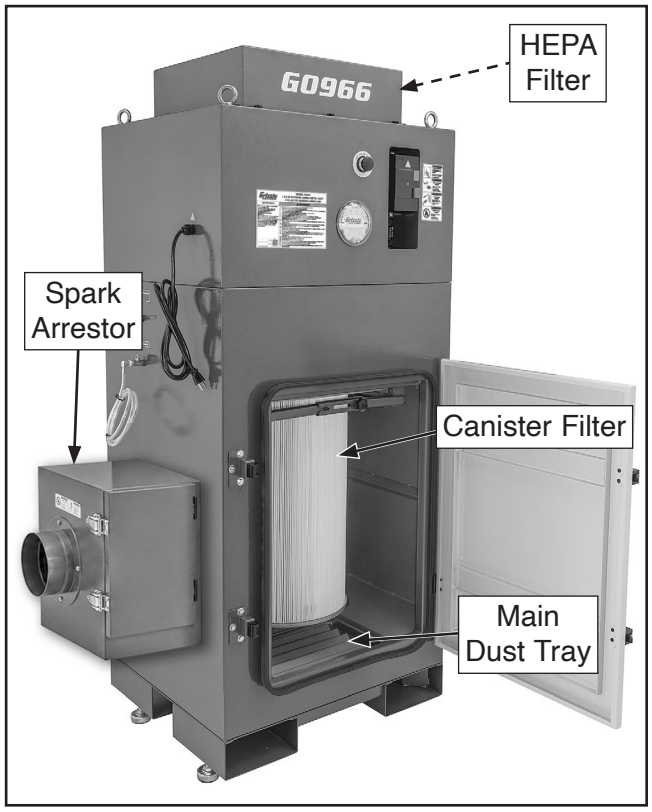

Figure 20. Location of filters and main dust tray.

When the machine is not in use, unplug it from the power source and disconnect the air supply to avoid accidental startup.

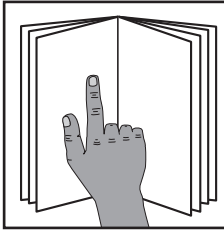

⚠WARNING

To reduce your risk of serious injury, read this entire manual BEFORE using machine.

⚠WARNING

Never operate machine with damaged or worn parts. Never operate machine with filters, guards, or covers removed.

⚠WARNING

Eye and face injuries and respiratory problems can occur while operating or cleaning this machine. Wear personal protective equipment to reduce your risk from these hazards. Wear NIOSH-approved respirator, ANSI-approved safety goggles, and leather gloves whenever checking or emptying collection tray and air filter. Keep metal dust off clothes and skin.

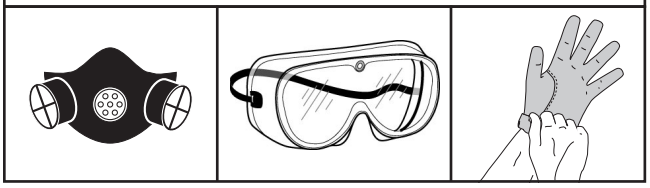

To complete a typical operation, operator does the following:

1. Connects dust collector to dust-producing machine.
2. Connects dust collector to power supply, then to compressed air supply.
3. Turns metal dust collector ***ON***, then turns dust-producing machine ***ON*** and performs operation.
4. Turns dust-producing machine ***OFF*** when operation is complete.
5. Turns metal dust collector ***OFF*** when finished with operation or to clean canister filter.
6. Disconnects machine from air and power supply, then opens drain valve to drain air and moisture from air tank.
7. Cleans dust tray and spark arrestor.

SECTION 5: ACCESSORIES

⚠WARNING

Installing unapproved accessories may cause machine to malfunction, resulting in serious personal injury or machine damage. To reduce this risk, only install accessories recommended for this machine by Grizzly.

NOTICE

Refer to our website or latest catalog for additional recommended accessories.

T33837—Replacement HEPA Filter
T33838—Replacement Canister Filter



Figure 21. T33837 & T33838 replacement filters.

H5293—4" Metal Duct Starter Kit
H5295—5" Metal Duct Starter Kit
H5297—6" Metal Duct Starter Kit
Save over 25% with this great starter kit. Includes: (2) machine adapters, (10) pipe clamps, (3) 5' straight pipes, (1) branch, (3) pipe hangers, (1) end cap, (3) adjustable nipples, (1) 90˚ elbow, and (1) 60˚ elbow.

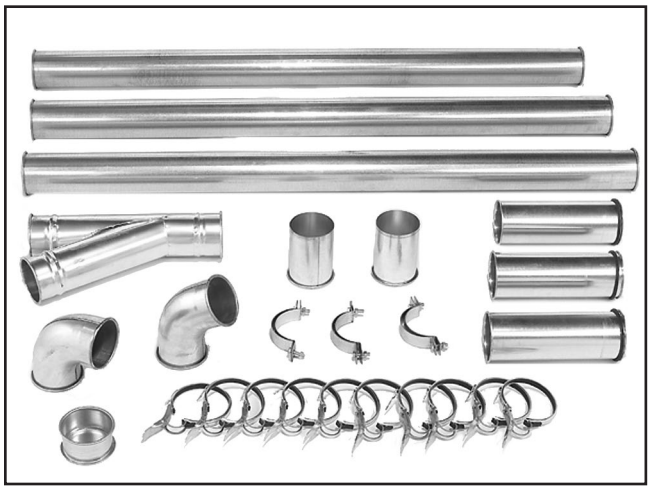

Figure 22. Metal duct starter kit.

G6177—4" Metal Blast Gate
G7340—5" Metal Blast Gate
G7358—6" Metal Blast Gate
Control airflow and resistance between machines.

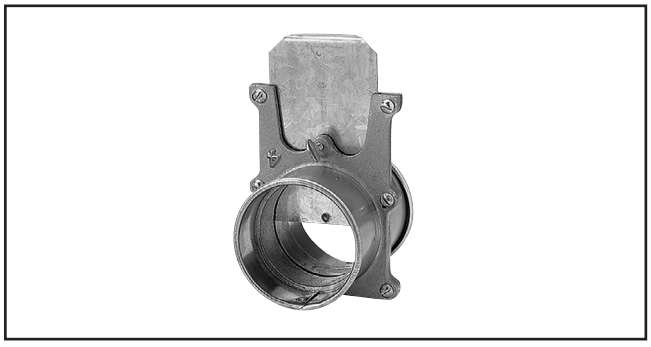

Figure 23. Metal blast gates.

Reducers & Adapters
We carry a multitude of smooth-wall metal reducers, adapters, and fittings.

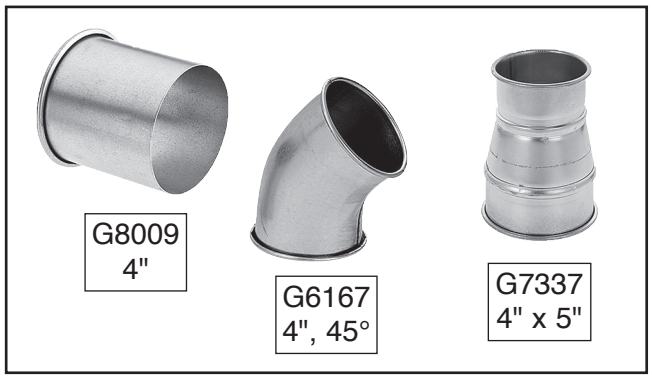

Figure 24. Metal reducers & adapters.

G6163—4" Dust Collection Pipe Clamp
G7343—5" Dust Collection Pipe Clamp
G7361—6" Dust Collection Pipe Clamp
These clamps feature lever latches and foam seals that secure around the rolled ends of fittings and pipe.



Figure 25. Dust collection pipe clamps.

Metal Ducting

G6162—4" x 5' Straight Metal Pipe
G7346—5" x 5' Straight Metal Pipe
G7364—6" x 5' Straight Metal Pipe
These laser welded straight pipes ensure a super smooth internal seam. Ends easily clamp together for a sealed fit without screws or silicone.

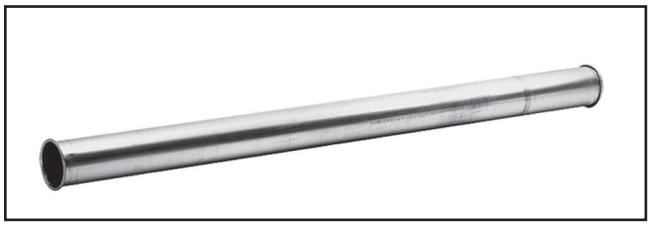

Figure 26. Straight metal pipe.

G0897—4" x 48" Metal Belt Grinder/Sander
Featuring the popular 4" wide belt, the G0897 is great for knife making and many more uses. The powerful 2 HP motor moves the belt at 4500 FPM, allowing you to easily remove material from even the toughest steel.

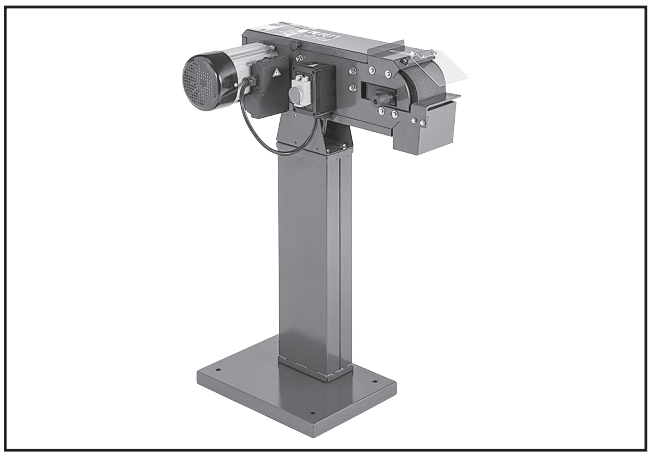

Figure 27. G0897 Metal belt grinder/sander.

SECTION 6: MAINTENANCE

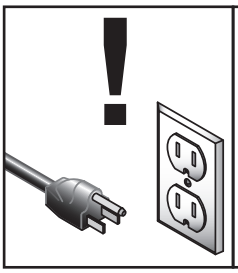

⚠WARNING

To reduce risk of shock or accidental startup, always disconnect machine from power before adjustments, maintenance, or service.

⚠WARNING

Eye and face injuries and respiratory problems can occur while operating or cleaning this machine. Wear personal protective equipment to reduce your risk from these hazards. Wear NIOSH-approved respirator, ANSI-approved safety goggles, and leather gloves whenever checking or emptying dust trays and filters. Keep metal dust off clothes and skin.





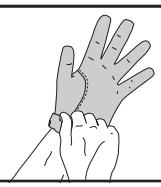

Schedule

For optimum performance from this machine, this maintenance schedule must be strictly followed.

Ongoing

To minimize your risk of injury and maintain proper machine operation, shut down the machine immediately if you ever observe any of the items below, and fix the problem before continuing operations:

- Fire hazards/smoldering metal dust.
- Loose mounting bolts.
- Damaged or worn filters.
- Damaged or worn door gaskets/seals.
- Worn or damaged wires.
- Any other unsafe condition.

Daily Maintenance

- Empty main dust tray.
- Drain air tank.
- Clean canister filter using AIR PULSE CLEAN button.
- Check pressure gauge for proper operating pressure. If operating pressure exceeds 6" of water, refer to **Replacing Canister Filter** on **Page 29**.
- Empty spark arrestor dust tray.
- Remove and inspect spark arrestor filters.

Monthly Maintenance

- Clean dust buildup from inside cabinet and off motor.
- Inspect/clean inside ducts and fittings.
- Vacuum debris from spark arrestor filters.

Bi-Annual (2-Year) Maintenance

- Replace spark arrestor filters.

Cleaning Exterior

To clean the exterior of the Model G0966, use a soft bristle brush and shop vacuum with a HEPA filter, then wipe off remaining dust with a soft, dry cloth.

⚠WARNING

Wear ANSI-approved safety goggles, a NIOSH-approved respirator, and protective gloves when removing, cleaning, and replacing filters or dust trays. Carefully minimize amount of dust allowed to become airborne, and prevent spread of dust onto hands or clothing. Properly dispose of all waste according to local regulations for material type.

Cleaning Canister Filter

The Model G0966 uses air pulse technology to remove metal chip particles from the canister filter pleats. A new filter will produce 2" of water or less of vacuum pressure. As the dust collector is used and the filter traps more particles, the vacuum pressure will gradually increase. The filter is considered effective when operating up to 6" of water (see **Figure 28**).

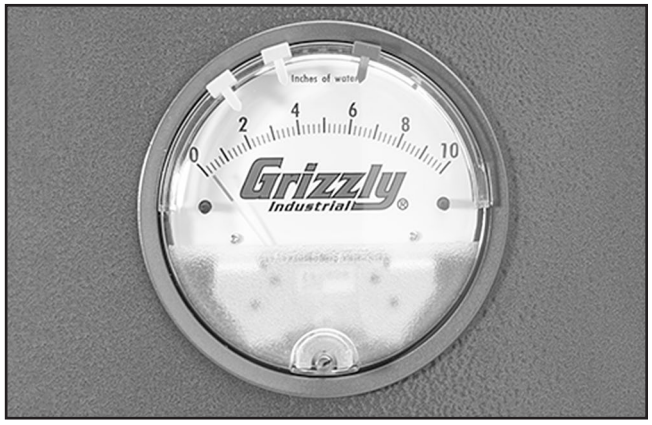

Figure 28. Pressure gauge.

Clean the canister filter using AIR PULSE CLEAN button daily, or when vacuum pressure increases.

When the vacuum pressure nears 6" of water and will no longer decrease after being cleaned with the AIR PULSE CLEAN button, the filter must be replaced. For detailed instructions, refer to **Replacing Canister Filter** on **Page 29**.

⚠WARNING

To reduce the risk of dust exposure, DO NOT clean canister filter with AIR PULSE CLEAN button unless maintenance door is closed and latched.

To clean canister filter:

1. Turn dust collector ***OFF***.

2. Connect compressed air hose to air inlet (see **Figure 29**).

   IMPORTANT: To avoid damage to machine, do not exceed 90 PSI of air pressure.

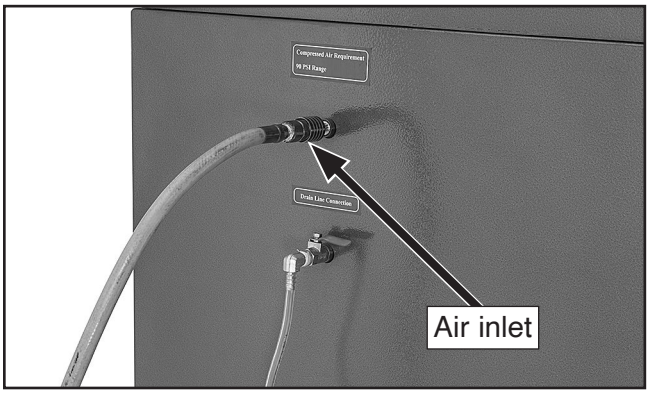

Figure 29. Air hose attached.

3. Press AIR PULSE CLEAN button one or two times (see **Figure 30**).



Figure 30. Location of AIR PULSE CLEAN button.

4. Repeat **Step 3** 1–2 more times.

5. Allow dust to settle for at least 30 seconds, then empty dust tray (refer to **Emptying Main Dust Tray** on **Page 26**).

6. Turn dust collector ***ON*** to ensure vacuum pressure is within normal operating range.

Cleaning Spark Arrestor

The spark arrestor contains a stainless steel mesh filter and an aluminum mesh filter. Dust accumulation can restrict airflow, reduce dust collection performance, and provide fuel for sparks or hot particles, increasing the risk of fire. Inspect both filters and vacuum the dust tray daily. Vacuum the filters monthly, or more frequently if buildup is present.

To clean spark arrestor:

1. DISCONNECT MACHINE FROM POWER AND AIR!

2. Open spark arrestor door; loosen (4) thumbscrews, and remove stainless steel mesh filter and aluminum mesh filter (see **Figure 31**).

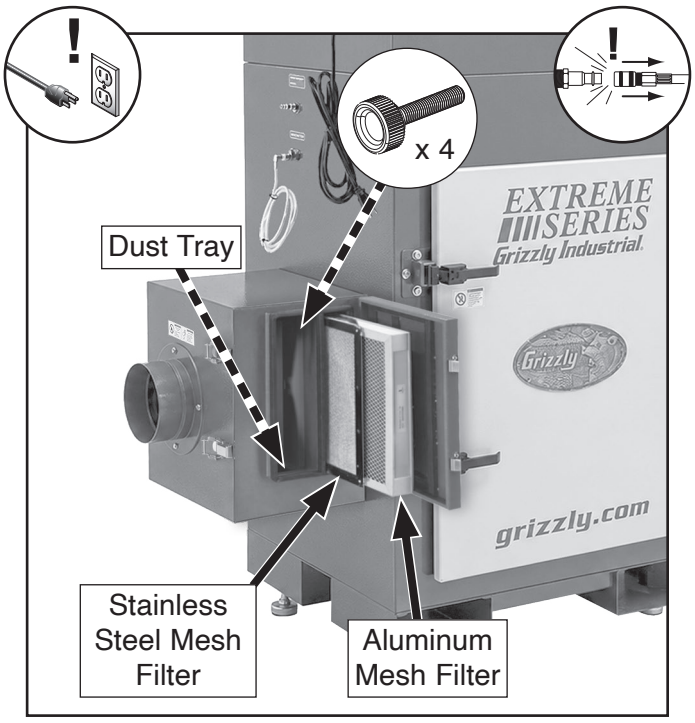

Figure 31. Location of spark arrestor filters and dust tray.

3. Inspect filters for wear or damage, vacuum filters if buildup is present; vacuum dust tray.

   Note: *Filters may be rinsed with clean water, however, both filters must be completely dry before installing into chamber.*

4. Install aluminum mesh filter and stainless steel mesh filter, then tighten thumbscrews.

   IMPORTANT: Ensure stainless steel filter is installed in front of aluminum mesh filter, as shown in **Figure 31**.

5. Close and secure spark arrestor door.

Emptying Main Dust Tray

Frequently monitor and empty the main dust tray as necessary during operations.

To empty main dust tray:

1. DISCONNECT MACHINE FROM POWER AND AIR!

2. Pull to release (2) compression latches and open maintenance door (see **Figure 32**).

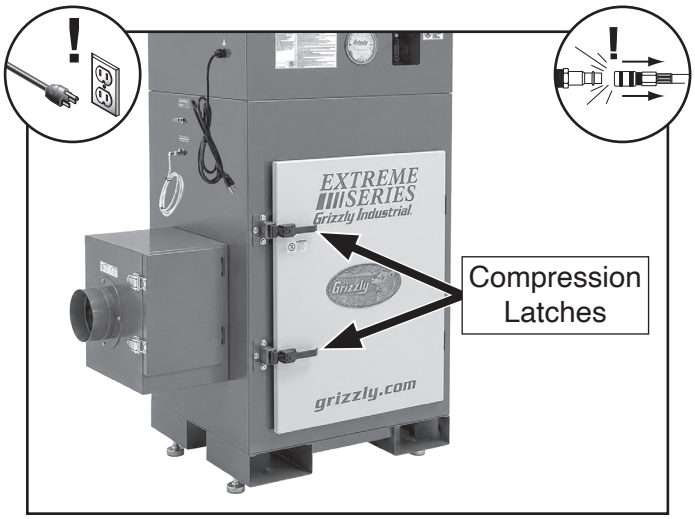

Figure 32. Location of compression latches.

3. Using handle slot, lift dust tray up and out of cabinet (see **Figure 33**).

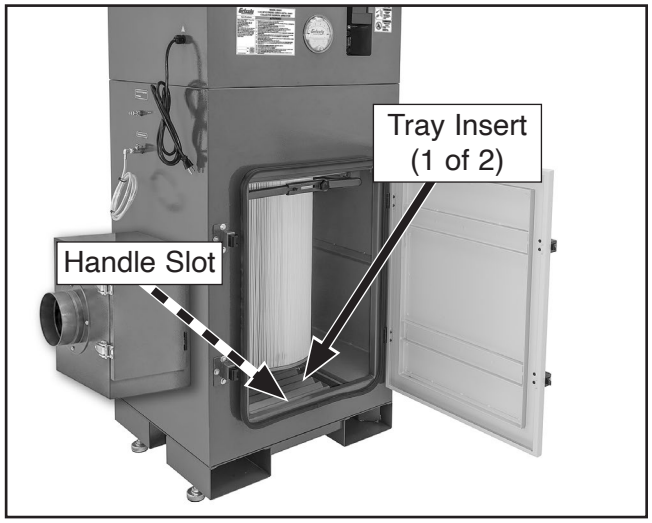

Figure 33. Dust tray components.

4. Remove tray inserts, then empty tray into approved, closed-top metal disposal container. Gently use soft bristled brush to remove fine particles from bottom of tray.

5. After cleaning, place inserts into dust tray, then place tray into cabinet.

6. Close and latch maintenance door.

Cleaning Ducts

Keeping the ducting clear is important for maintaining the efficient performance of this metal dust collector. Metal particles that do not reach the dust collector can build up and block the ducts, leading to reduced efficiency and a potential fire hazard. Inspect all ducts and fittings monthly and clean as necessary.

⚠WARNING

Wear ANSI-approved safety goggles, a NIOSH-approved respirator, and protective gloves when removing and cleaning ducting. Carefully minimize amount of dust allowed to become airborne, and prevent spread of dust onto hands or clothing. Properly dispose of all waste according to local regulations for material type.

Items Needed	**Qty**
Duct Cleaning Brush	1
Shop Vacuum with HEPA Filter and Non-Conductive Hose	1

To clean ducts:

1. DISCONNECT MACHINE FROM POWER AND AIR!

2. Undo clamps to disconnect ducts and fittings.

3. Use duct cleaning brush and vacuum to remove accumulated metal dust.

4. Connect ducts and secure clamps.

5. Dispose of waste according to local regulations.

Replacing HEPA Filter

Replacing the HEPA filter should rarely be necessary. However, if your machine shows poor dust collection performance, and cleaning/replacing the canister filter does not remedy this situation, you may need to replace the HEPA filter.

⚠WARNING

Wear ANSI-approved safety goggles, a NIOSH-approved respirator, and protective gloves when removing, cleaning, and replacing filters. Carefully minimize amount of dust allowed to become airborne, and prevent spread of dust onto hands or clothing. Properly dispose of all waste according to local regulations for material type.

Item Needed	Qty
HEPA Filter (T33837)	1

To replace HEPA filter:

1. DISCONNECT MACHINE FROM POWER AND AIR!

2. Remove (12) knob bolts and flat washers from HEPA filter cage (see **Figure 34**).

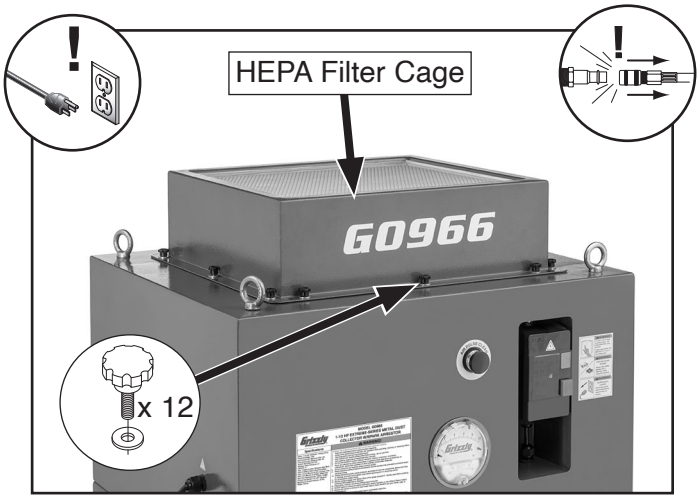

Figure 34. Location of HEPA filter cage knob bolts.

3. Lift filter cage off machine, then remove HEPA filter (see **Figure 35**).

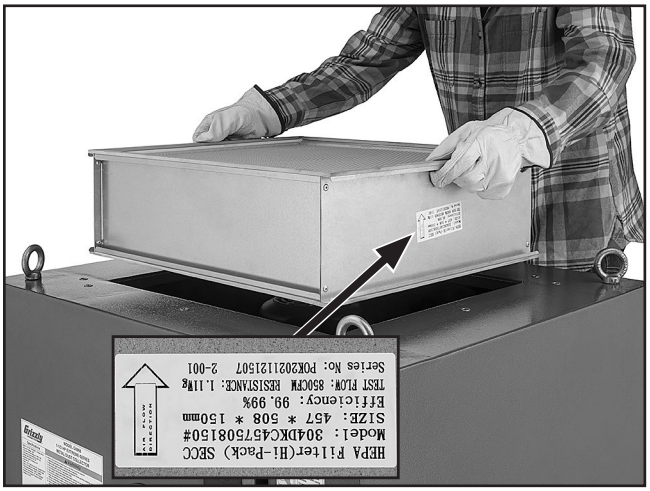

Figure 35. Removing HEPA filter.

4. Install new HEPA filter and filter cage, then secure with knob bolts and washers.

   Note: *Ensure HEPA filter air flow directional arrow points away from machine, as shown in* ***Figure 35****.*

5. Dispose of used HEPA filter and any waste according to local regulations.

Replacing Canister Filter

The canister filter should be replaced when the vacuum pressure reaches 6" of water and the AIR PULSE CLEAN function does not improve performance.

⚠WARNING

Wear ANSI-approved safety goggles, a NIOSH-approved respirator, and protective gloves when removing, cleaning, and replacing filters. Carefully minimize amount of dust allowed to become airborne, and prevent spread of dust onto hands or clothing. Properly dispose of all waste according to local regulations for material type.

Item Needed **Qty**
Canister Filter (T33838) 1

To replace canister filter:

1. DISCONNECT MACHINE FROM POWER AND AIR!

2. Pull to release (2) compression latches and open maintenance door.

3. Loosen filter retaining knob (see **Figure 36**).

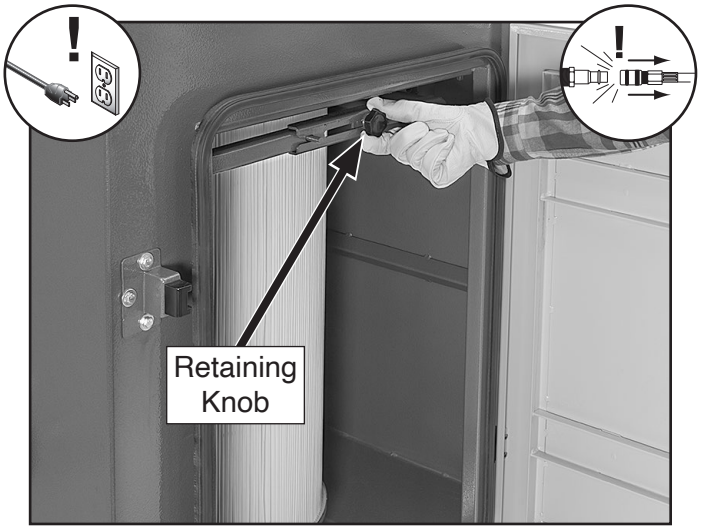

Figure 36. Loosening retaining knob.

4. Slide fixing plate to right, then rotate both handles down (see **Figure 37**) to release canister filter.

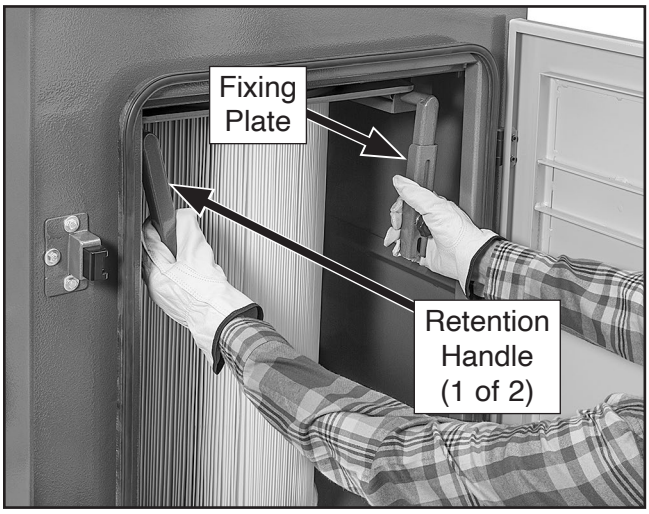

Figure 37. Rotating handles.

5. Slide canister filter out (see **Figure 38**).



Figure 38. Removing canister filter.

6. Reverse **Steps 3–5** to install canister filter.

7. Close and latch maintenance door.

8. Dispose of used canister filter and any waste according to local regulations.

Cleaning Impeller

The impeller normally requires no maintenance, but the blades can accumulate metal dust that can adversely affect impeller balance. Removing the motor/impeller assembly allows cleaning and inspection of the impeller blades.

⚠WARNING

Wear ANSI-approved safety goggles, a NIOSH-approved respirator, and protective gloves when removing HEPA filter and cleaning impeller. Carefully minimize amount of dust allowed to become airborne, and prevent spread of dust onto hands or clothing. Properly dispose of all waste according to local regulations for material type.

Items Needed	**Qty**
Open-End Wrench or Socket ½"	1
Soft Bristle Brush	1
Shop Vacuum with HEPA Filter and Non-Conductive Hose	1

To clean impeller:

1. DISCONNECT MACHINE FROM POWER AND AIR!

2. Remove HEPA filter (refer to **Replacing HEPA Filter** on **Page 28**).

3. Remove (12) hex bolts and flat washers that secure motor (see **Figure 39**).

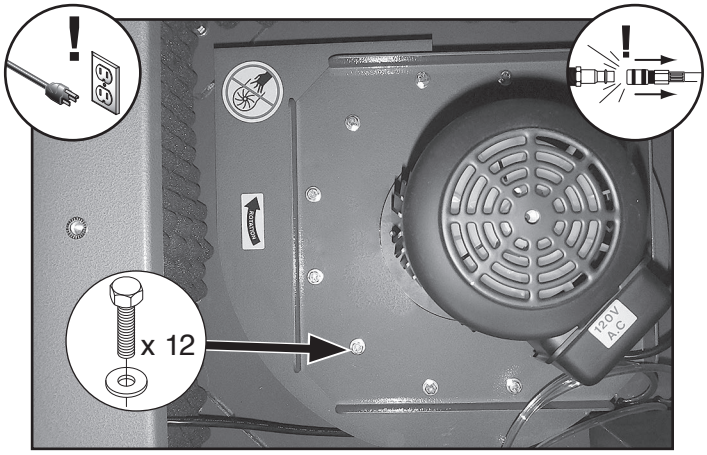

Figure 39. Location of motor mount bolts.

4. Remove motor/impeller assembly and carefully set on machine housing (see **Figure 40**).

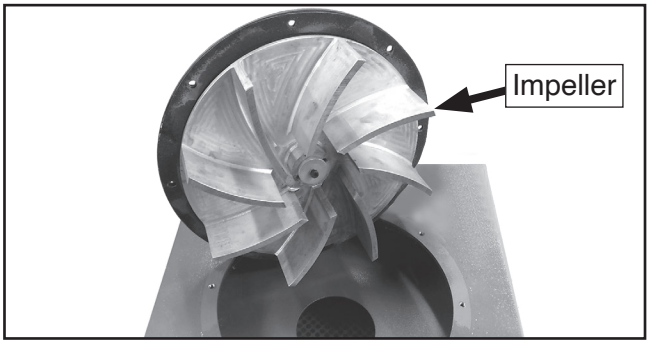

Figure 40. Example of motor/impeller assembly removed for cleaning and inspection.

5. Use a soft bristle brush and vacuum to remove dust from impeller blades and impeller housing. Inspect impeller for damage and replace if necessary.

   Note: *Use only NFPA 484-compliant shop vacuum with HEPA filter and non-conductive hose to vacuum debris inside housing. DO NOT use compressed air. Dust particles can become airborne and cause injury.*

6. Replace motor/impeller and secure with hex bolts and flat washers.

7. Install HEPA filter and filter cage.

SECTION 7: SERVICE

Review the troubleshooting procedures in this section if a problem develops with your machine. If you need replacement parts or additional help with a procedure, call our Technical Support. **Note:** *Please gather the serial number and manufacture date of your machine before calling.*

Troubleshooting

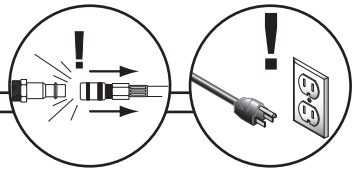

Motor & Electrical

Symptom	Possible Cause	Possible Solution
Machine does not start or power supply breaker immediately trips after startup.	1. Incorrect power supply voltage or circuit size. 2. Plug/receptacle at fault/wired incorrectly. 3. Attempting to start machine without filter(s) installed. 4. Power supply circuit breaker tripped or fuse blown. 5. Motor wires connected incorrectly. 6. Thermal overload relay has tripped/at fault. 7. Centrifugal switch needs adjustment/contact points dirty. 8. Wiring broken, disconnected, or corroded. 9. Motor or motor bearings at fault.	1. Ensure correct power supply voltage and circuit size. 2. Test for good contacts, correct wiring (**Page 35**). 3. Filters must be installed before machine is turned ***ON***. Starting machine without filters can cause circuit overload or machine electrical damage. 4. Ensure circuit is free of shorts. Reset circuit breaker or replace fuse. 5. Correct motor wiring connections (**Page 35**). 6. Reset. Adjust or replace if at fault. 7. Adjust centrifugal switch/clean contact points. 8. Fix broken wires or disconnected/corroded connections (**Page 35**). 9. Replace motor.
Machine stalls or is underpowered.	1. Motor wires connected incorrectly. 2. Plug/receptacle at fault/wired incorrectly. 3. Extension cord too long. 4. Centrifugal switch needs adjustment/contact points dirty. 5. Motor or motor bearing at fault.	1. Correct motor wiring connections (**Page 35**). 2. Test for good contacts, correct wiring (**Page 35**). 3. Move machine closer to power supply, use shorter extension cord (**Page 11**). 4. Adjust centrifugal switch/clean contact points. 5. Replace motor.
Machine has vibration or noisy operation.	1. Motor or component loose. 2. Motor fan rubbing on cover. 3. Centrifugal switch needs adjustment. 4. Motor shaft bent. 5. Motor bearings at fault.	1. Replace damaged or missing bolts/nuts or tighten if loose. 2. Fix/replace fan cover; replace loose/damaged fan. 3. Adjust centrifugal switch. 4. Test with dial indicator/replace motor. 5. Test by rotating shaft; rotational grinding/loose shaft requires bearing replacement.

Operation

Symptom	Possible Cause	Possible Solution
Machine has vibration or noisy operation.	1. Machine feet not adjusted correctly. 2. Debris caught in impeller. 3. Impeller damaged or unbalanced. 4. Impeller loose on motor shaft.	1. Adjust machine feet (**Page 16**). 2. Inspect impeller for debris (**Page 30**). 3. Disconnect dust collector from power. Inspect impeller for chips, cracks, or broken fins. Replace impeller if damaged. 4. Secure impeller; replace motor and impeller as a set if motor shaft and impeller hub are damaged.
Dust collector does not adequately collect dust; poor performance.	1. Maintenance/spark arrestor door not fully closed. 2. Dust tray(s) full. 3. Filters are dirty/clogged or at end of life. 4. Spark arrestor filters clogged or damaged. 5. Ducting and ports are incorrectly sized. 6. Ducting blocked/restricted. 7. Leak in ducting/connections. 8. The dust collector is too far away from the point of suction, or there are too many sharp bends in the ducting. 9. Dust collector is undersized.	1. Securely latch maintenance/spark arrestor door. 2. Empty dust tray(s) (**Page 26**). 3. Clean canister filter; replace filters if performance does not improve (**Page 25**). 4. Clean/replace spark arrestor filters (**Page 26**). 5. Install correctly sized ducts and fittings (**Page 19**). 6. Remove ducting from dust collector inlet and unblock the restriction (**Page 27**). 7. Seal leaks. 8. Relocate the dust collector closer to the point of suction; remove sharp bends in ducting. 9. Install a larger dust collector.
Air pulse clean will not function or is underpowered.	1. No compressed air supply is attached. 2. Air supply delivery is set below 90 PSI; regulator at fault. 3. Drain valve is open. 4. Air supply hose or delivery system is too long. 5. Safety valve at fault. 6. Air supply or in-line filter is damaged or clogged. 7. Air supply in-line water separator is full (if used). 8. Air supply compressor undersized. 9. Leaks in air supply hose/delivery line. 10. Control or jet pulse valve at fault.	1. Attach air supply (**Page 17**). 2. Adjust air supply regulator to higher pressure delivery (DO NOT exceed 90 PSI); replace regulator if at fault. 3. Close drain valve (**Page 4**). 4. Use shorter supply hose/delivery system. 5. Inspect/replace safety valve. 6. Replace air supply filter or in-line filter assembly. 7. Empty air supply water separator. 8. Use air compressor capable of higher airflow delivery. 9. Inspect supply air hose/delivery line and all connections for leaks. 10. Test/replace.
Attached air supply from compressor is dirty or excessively moist.	1. Dust collector tank needs to be drained. 2. In-line water separator is full (if used). 3. In-line filter or water separator is needed in air supply line. 4. Delivery pipes are dirty (if used).	1. Open drain valve to drain condensation, then close (**Page 4**). 2. Drain water separator. 3 Install in-line filter/water separator in air supply line. 4. Remove delivery pipes; clean out and reinstall/replace.

Operation (Cont.)

Symptom	Possible Cause	Possible Solution
Pneumatically cleaning canister filter does not improve dust collection performance.	1. Air supply delivery is set below 90 PSI. 2. Canister filter clogged or at end of life.	1. Adjust air supply regulator to higher airflow delivery (DO NOT exceed 90 PSI). 2. Remove and clean (**Page 25**)/replace (**Page 29**) canister filter.
Cleaning/ replacing canister filter does not improve dust collection performance.	1. HEPA filter clogged and at end of life.	1. Replace HEPA filter (**Page 28**).
Dust collector blows dust into the air.	1. Duct clamps not properly clamped and secured; ducting loose/damaged.	1. Secure ducts, making sure duct clamps are tight; tighten/replace ducting.

SECTION 8: PNEUMATIC SYSTEM

Pneumatic System Diagram

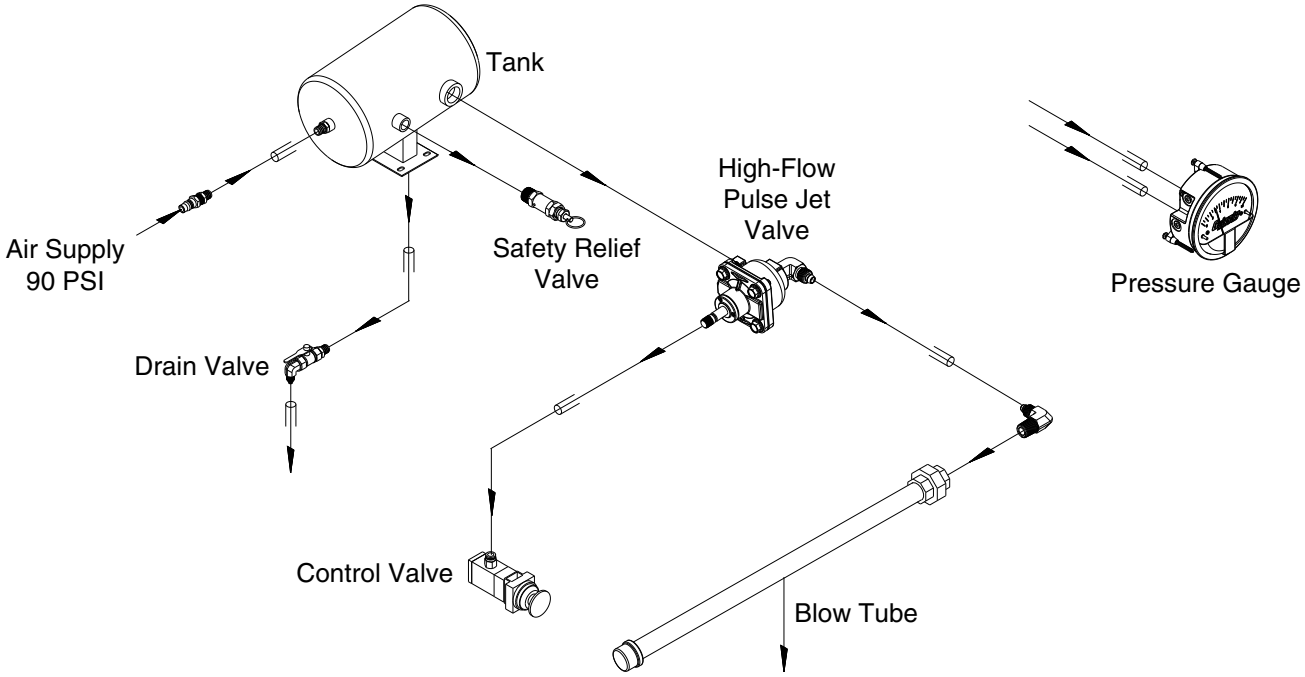

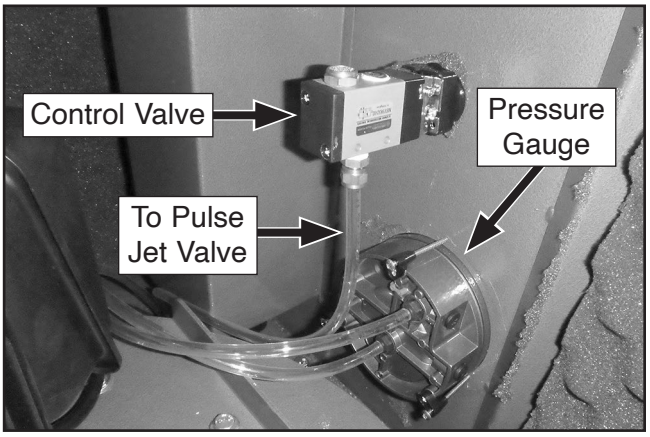

Figure 41. Example of control valve.

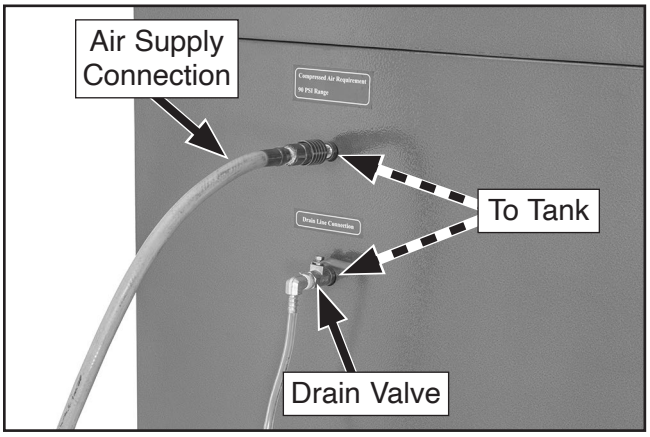

Figure 42. Air supply and drain valve.

⚠WARNING

To prevent impact and soft tissue injuries from air streams or bursting components, heed the following warnings before servicing the pneumatic system on your machine.

a) Bleed air from system and disconnect supply line before servicing machine or air components.

b) Only supply clean, dry, regulated compressed air. Never exceed maximum operating pressure.

c) Never use oxygen, carbon dioxide, combustible gases, or any bottled gas as air source, as these can explode.

d) Inspect air tank, hoses, and fittings for rust, damage, or looseness, and repair/replace damaged components before operating.

SECTION 9: WIRING

These pages are current at the time of printing. However, in the spirit of improvement, we may make changes to the electrical systems of future machines. Compare the manufacture date of your machine to the one stated in this manual, and study this section carefully.

If there are differences between your machine and what is shown in this section, call Technical Support at (570) 546-9663 for assistance BEFORE making any changes to the wiring on your machine. An updated wiring diagram may be available. **Note:** *Please gather the serial number and manufacture date of your machine before calling. This information can be found on the main machine label.*

⚠WARNING
Wiring Safety Instructions

SHOCK HAZARD. Working on wiring that is connected to a power source is extremely dangerous. Touching electrified parts will result in personal injury including but not limited to severe burns, electrocution, or death. Disconnect the power from the machine before servicing electrical components!

MODIFICATIONS. Modifying the wiring beyond what is shown in the diagram may lead to unpredictable results, including serious injury or fire. This includes the installation of unapproved aftermarket parts.

WIRE CONNECTIONS. All connections must be tight to prevent wires from loosening during machine operation. Double-check all wires disconnected or connected during any wiring task to ensure tight connections.

CIRCUIT REQUIREMENTS. You MUST follow the requirements at the beginning of this manual when connecting your machine to a power source.

WIRE/COMPONENT DAMAGE. Damaged wires or components increase the risk of serious personal injury, fire, or machine damage. If you notice that any wires or components are damaged while performing a wiring task, replace those wires or components.

MOTOR WIRING. The motor wiring shown in these diagrams is current at the time of printing but may not match your machine. If you find this to be the case, use the wiring diagram inside the motor junction box.

CAPACITORS/INVERTERS. Some capacitors and power inverters store an electrical charge for up to 10 minutes after being disconnected from the power source. To reduce the risk of being shocked, wait at least this long before working on capacitors.

EXPERIENCING DIFFICULTIES. If you are experiencing difficulties understanding the information included in this section, contact our Technical Support at (570) 546-9663.

NOTICE

The photos and diagrams included in this section are best viewed in color. You can view these pages in color at www.grizzly.com.

COLOR KEY

BLACK	Bk	BLUE	Bl	YELLOW	Yl	LIGHT BLUE	Lb
WHITE	Wt	BROWN	Br	YELLOW GREEN	Yg	BLUE WHITE	Bw
GREEN	Gn	GRAY	Gy	PURPLE	Pu		
RED	Rd	ORANGE	Or	PINK	Pk	TURQUOISE	Tu

Wiring Diagram 120V

MAG SWITCH 120V
NHD MS1-18D2E7N212PBVO

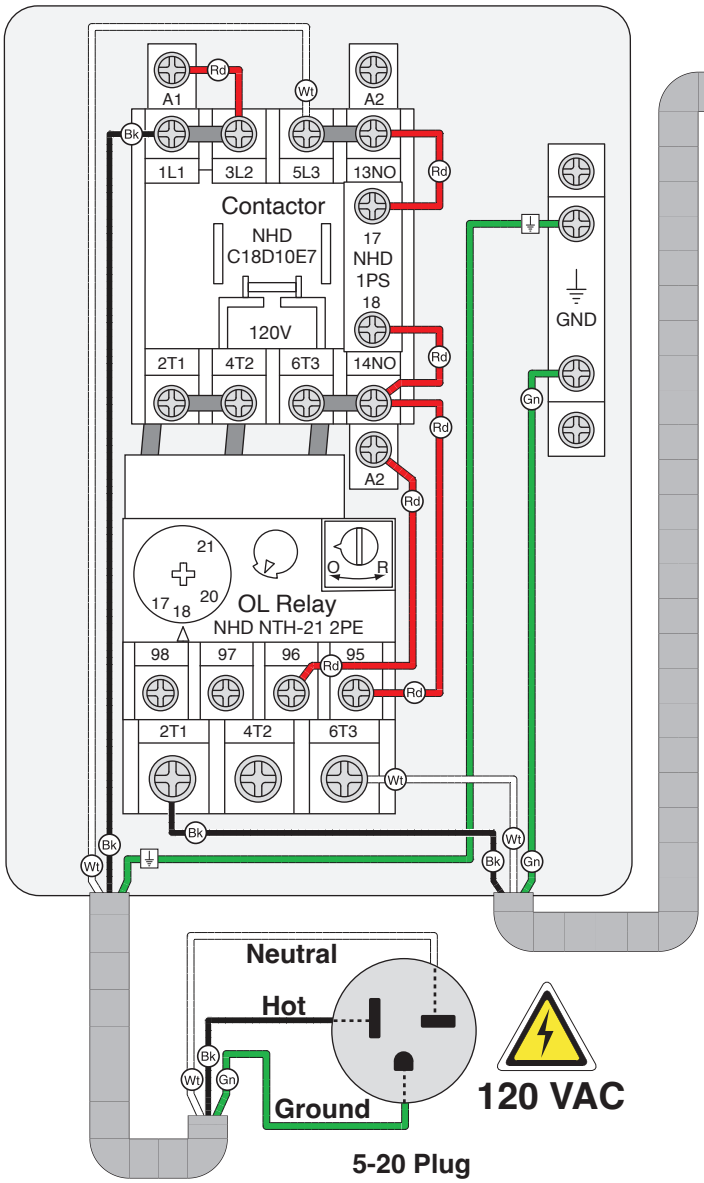

MOTOR 120V/240V

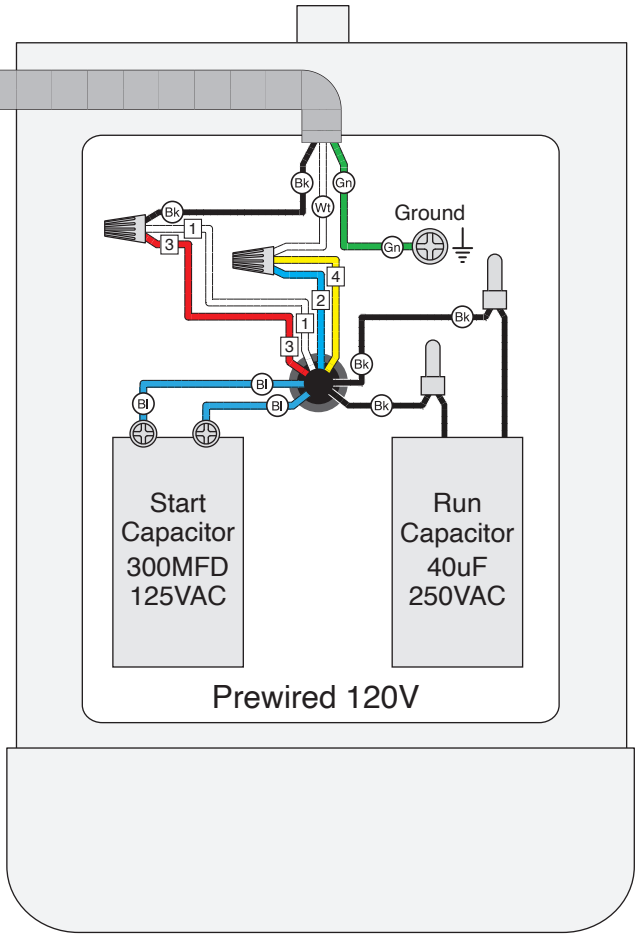



Figure 43. Motor junction box wiring (120V).

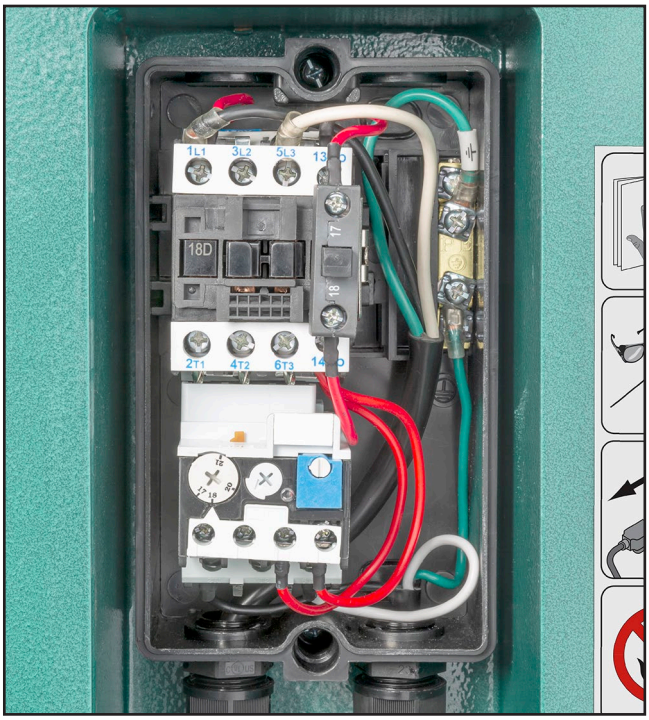

Figure 44. Magnetic switch wiring (120V).

READ WIRING SAFETY ON PAGE 35!

Wiring Diagram 240V

MAG SWITCH 240V
NHD MS1-09D2I7N112PBVO

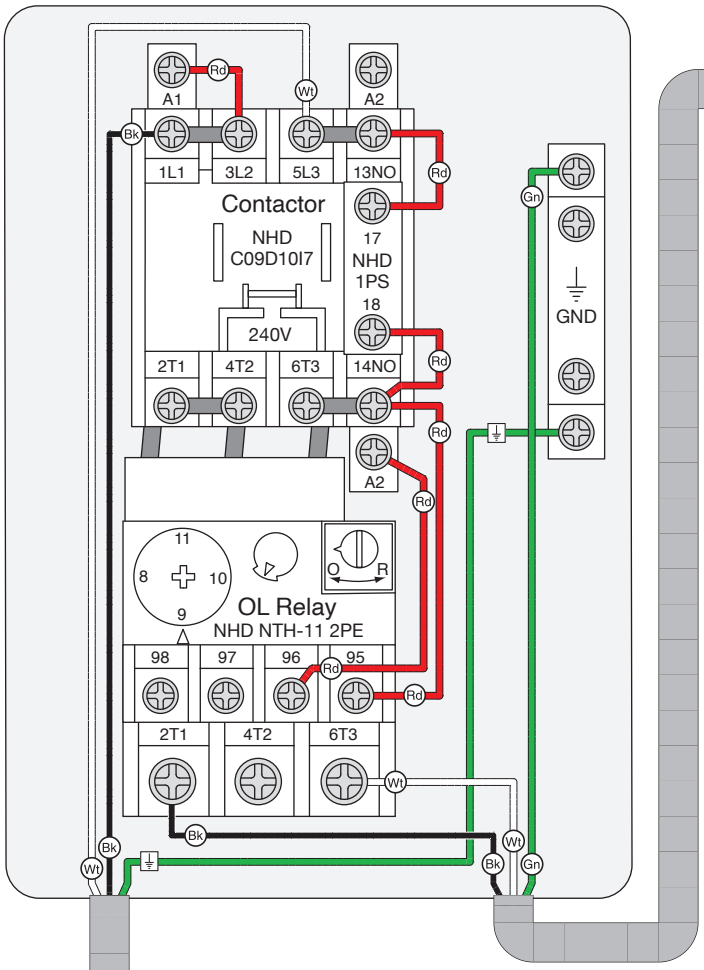

MOTOR 120V/240V

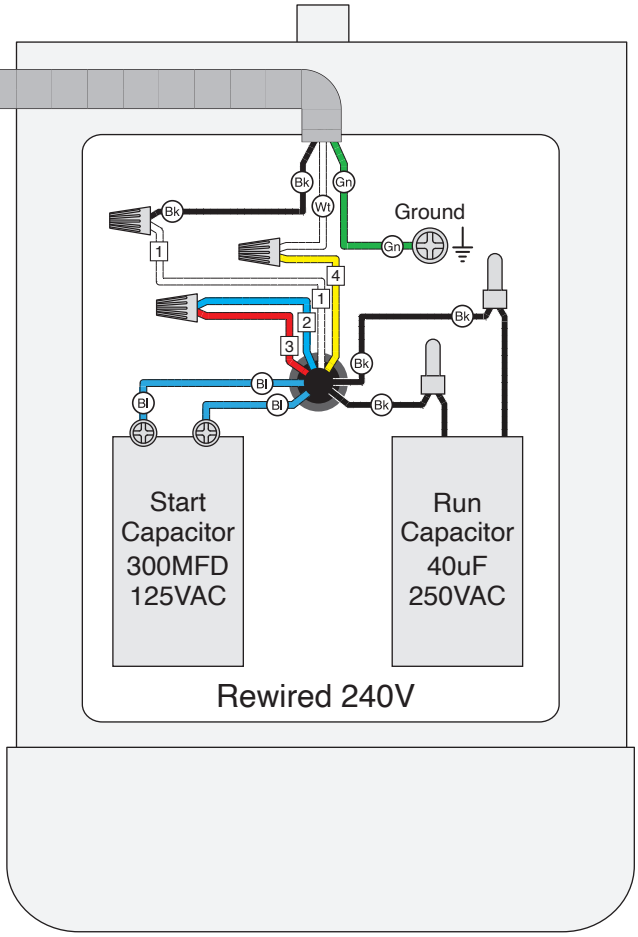

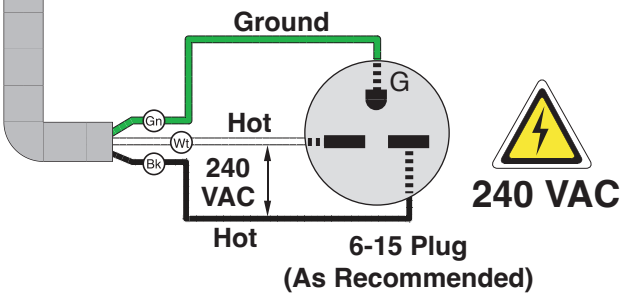



SECTION 10: PARTS

We do our best to stock replacement parts when possible, but we cannot guarantee that all parts shown are available for purchase. Call **(800) 523-4777** or visit **www.grizzly.com/parts** to check for availability.

Main

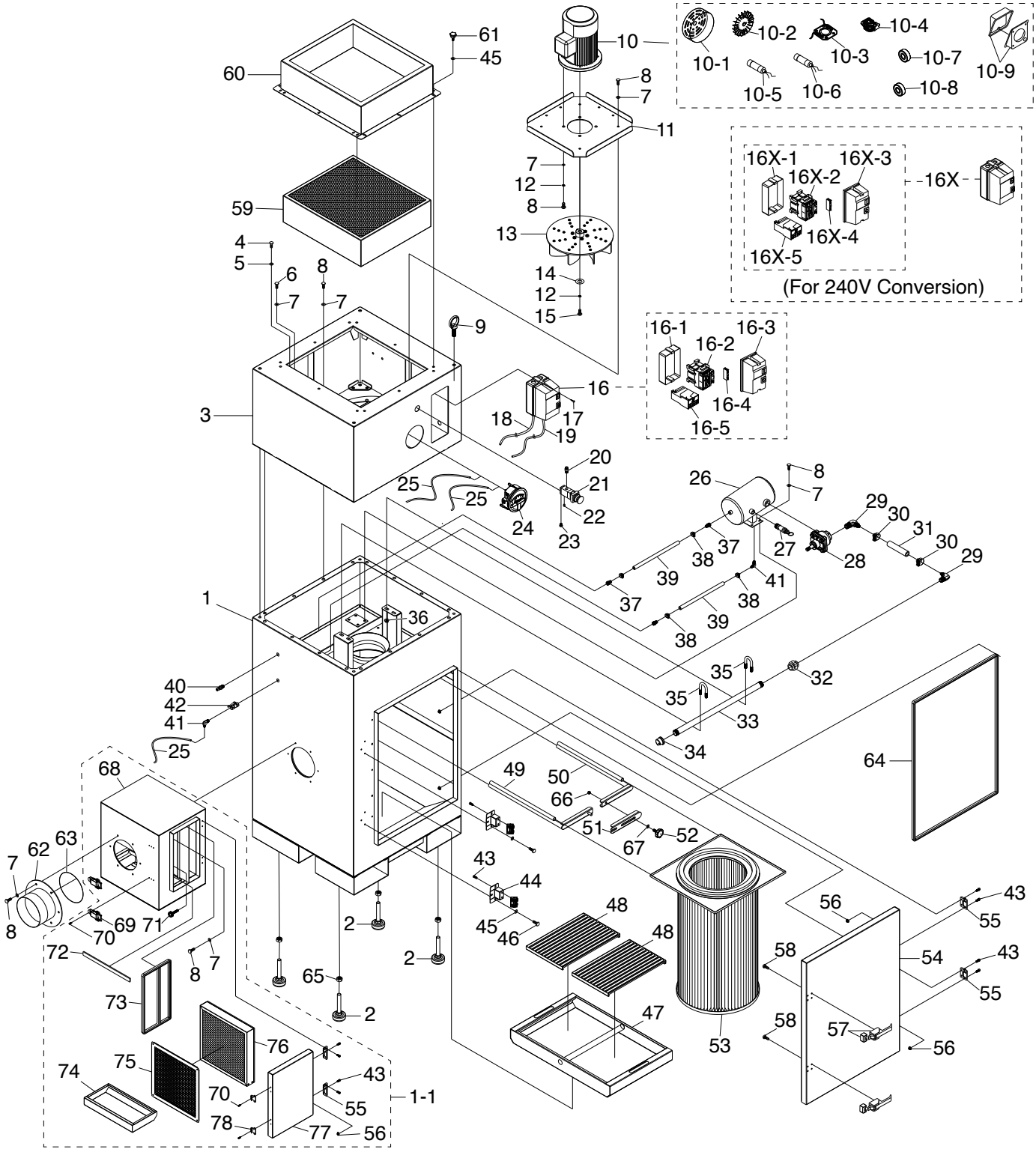

BUY PARTS ONLINE AT GRIZZLY.COM!
Scan QR code to visit our Parts Store.

Main Parts List

REF	PART #	DESCRIPTION
1	P0966001	MACHINE BODY
1-1	P0966001-1	SPARK ARRESTOR ASSEMBLY
2	P0966002	ADJUSTABLE FOOT M16-2 X 100
3	P0966003	MOTOR CHAMBER
4	P0966004	HEX BOLT 3/8-16 X 1-1/2
5	P0966005	FLAT WASHER 3/8
6	P0966006	HEX BOLT 5/16-18 X 1-1/2
7	P0966007	FLAT WASHER 5/16
8	P0966008	HEX BOLT 5/16-18 X 3/4
9	P0966009	EYE BOLT 30, M12-1.75 X 25
10	P0966010	MOTOR 1.5HP 120/240V 1-PH
10-1	P0966010-1	MOTOR FAN COVER
10-2	P0966010-2	MOTOR FAN
10-3	P0966010-3	CONTACT PLATE 19 X 70 INT
10-4	P0966010-4	CENTRIFUGAL SWITCH 9/16 3450
10-5	P0966010-5	S CAPACITOR 300M 125V 1-3/8 X 2-3/4
10-6	P0966010-6	R CAPACITOR 40M 250V 1-9/16 X 2-7/16
10-7	P0966010-7	BALL BEARING 6205ZZ (FRONT)
10-8	P0966010-8	BALL BEARING 6202ZZ (REAR)
10-9	P0966010-9	JUNCTION BOX
11	P0966011	IMPELLER COVER
12	P0966012	LOCK WASHER 5/16
13	P0966013	IMPELLER 12-1/2"
14	P0966014	FENDER WASHER 5/16
15	P0966015	HEX BOLT 5/16-18 X 1
16	P0966016	MAGNETIC SWITCH NHD MS1-18D2E7N212PBVO
16-1	P0966016-1	MAGNETIC SWITCH BOX
16-2	P0966016-2	CONTACTOR NHD C18D10E7 120V
16-3	P0966016-3	MAGNETIC SWITCH COVER
16-4	P0966016-4	AUX CONTACTOR NHD 1PS 1A 600V
16-5	P0966016-5	OL RELAY NHD NTH-21 2PE 17-21A
16X	P0966016X	MAGNETIC SWITCH NHD MS1-09D2I7N112PBVO
16X-1	P0966016X-1	MAGNETIC SWITCH BOX
16X-2	P0966016X-2	CONTACTOR NHD C-09D10I7 240V
16X-3	P0966016X-3	MAGNETIC SWITCH COVER
16X-4	P0966016X-4	AUX CONTACTOR NHD 1PS 1A 600V
16X-5	P0966016X-5	OL RELAY NHD NTH-11 2PE 8-11A
17	P0966017	PHLP HD SCR #10 X 5/8
18	P0966018	POWER CORD 3W 14G 118" 5-20P
19	P0966019	MOTOR CORD 3W 14G 59"
20	P0966020	COMPRESSION FITTING 1/4 NPT BRASS
21	P0966021	CONTROL VALVE SHAKO MSV9832-02NPBB
22	P0966022	SET SCREW 1/4-20 X 5/16
23	P0966023	SILENCER BREATHER VENT EP-02N
24	P0966024	PRESSURE GAUGE 0-10"
25	P0966025	PICKUP HOSE 3/16" X 5/16" X 59"
26	P0966026	AIR TANK
27	P0966027	SAFETY RELIEF VALVE 1/4 NPT 100PSI
28	P0966028	HIGH FLOW JET VALVE MG MGV-25
29	P0966029	HOSE FITTING 90 DEG BARBED 1PT

REF	PART #	DESCRIPTION
30	P0966030	HOSE CLAMP 1-1/4
31	P0966031	AIR HOSE 1" X 4"
32	P0966032	UNION 1PT
33	P0966033	PIPE 11-1/2 X 15.4 X 1
34	P0966034	CAP 11-1/2
35	P0966035	U-CLAMP 3/8-16 X 1-1/4, 1-3/8
36	P0966036	FLANGE NUT 3/8-16
37	P0966037	HOSE FITTING 1/4 PT BARBED STRAIGHT
38	P0966038	HOSE CLAMP 1/2
39	P0966039	HOSE 1/4" X 39"
40	P0966040	HOSE FITTING 1/4 NPT (MALE)
41	P0966041	HOSE FITTING 1/4 PT 90 DEG BARBED
42	P0966042	DRAIN VALVE 1/4 PT BALL
43	P0966043	BUTTON HD CAP SCR M5-.8 X 12
44	P0966044	LATCH BRACKET
45	P0966045	FLAT WASHER 1/4
46	P0966046	HEX BOLT 1/4-20 X 3/4
47	P0966047	DUST DRAWER
48	P0966048	SLOTTED TRAY INSERT
49	P0966049	FILTER SUPPORT (LEFT)
50	P0966050	FILTER SUPPORT (RIGHT)
51	P0966051	FILTER SUPPORT FIXING PLATE
52	P0966052	KNOB BOLT 5/16-18 X 1
53	P0966053	CANISTER FILTER 380 X 660 0.2-2 MICRONS
54	P0966054	MAINTENANCE DOOR
55	P0966055	HINGE
56	P0966056	FLANGE NUT M5-.8
57	P0966057	COMPRESSION LATCH ASSEMBLY
58	P0966058	FLAT HD SCR M5-.8 X 14
59	P0966059	FILTER HEPA 457 X 508 X 150 0.3 MICRONS
60	P0966060	HEPA FILTER CAGE
61	P0966061	KNOB BOLT 1/4-20 X 3/4
62	P0966062	DUST PORT 6"
63	P0966063	DUST PORT GASKET
64	P0966064	MAINTENANCE DOOR GASKET
65	P0966065	HEX NUT M16-2
66	P0966066	ACORN NUT 5/16-18
67	P0966067	FLAT WASHER 5/16
68	P0966068	SPARK ARRESTOR CHAMBER
69	P0966069	LATCH
70	P0966070	TAP SCREW #8 X 1/2
71	P0966071	THUMB SCREW 5/16-18 X 1-1/4, PLASTIC
72	P0966072	DUST TRAY GASKET 6 X 19 X 310MM
73	P0966073	ARRESTOR CHAMBER GASKET
74	P0966074	SPARK ARRESTOR DUST TRAY
75	P0966075	STAINLESS MESH FILTER 305 X 305MM X 4MM
76	P0966076	ALUMINUM MESH FILTER 305 X 305 X 45MM
77	P0966077	SPARK ARRESTOR DOOR
78	P0966078	LATCH CLEAT

Labels & Cosmetics

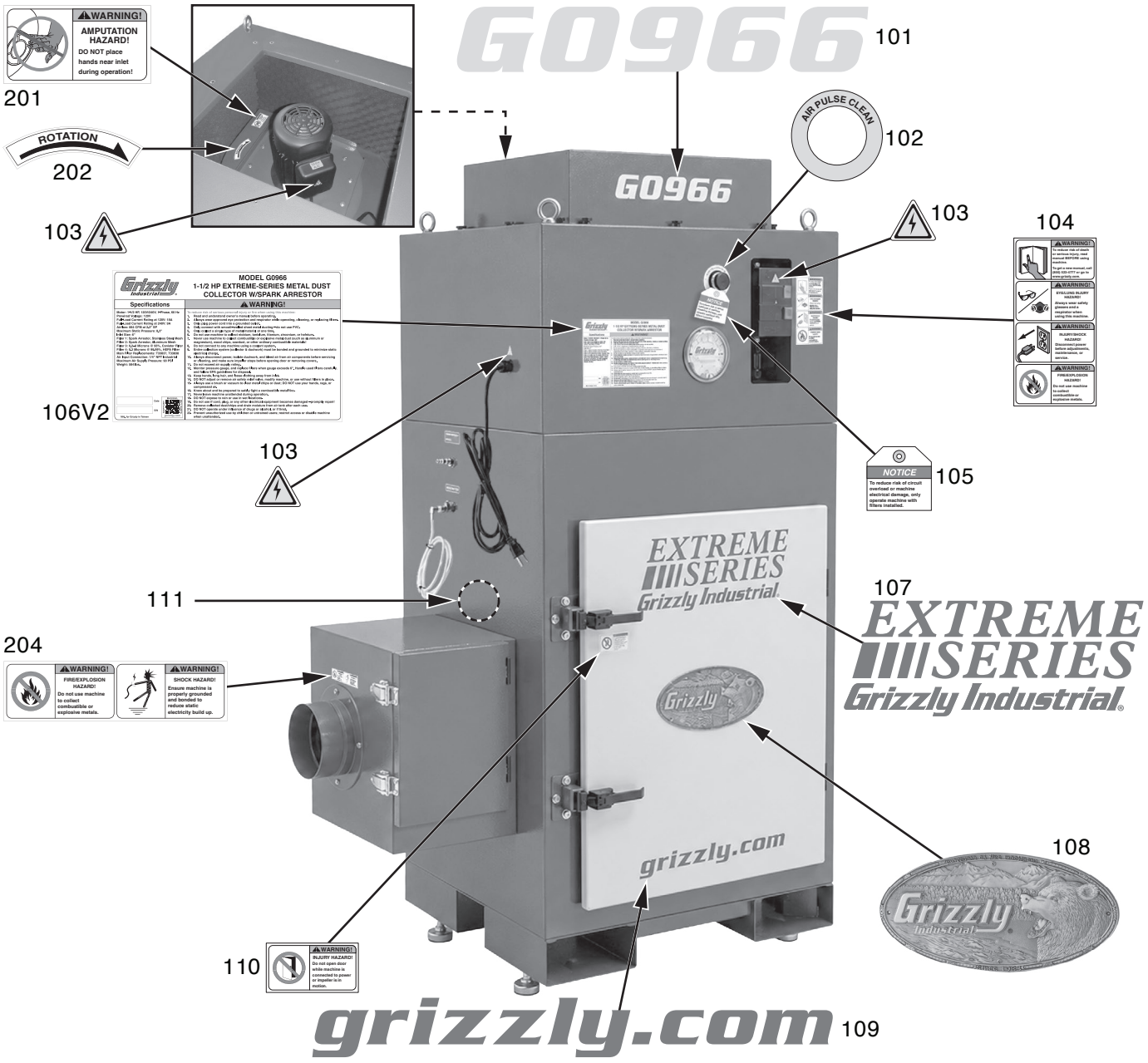

REF	PART #	DESCRIPTION
101	P0966101	MODEL NUMBER LABEL
102	P0966102	AIR PULSE CLEAN LABEL
103	P0966103	ELECTRICITY LABEL
104	P0966104	COMBO WARNING LABEL
105	P0966105	HANG NOTICE LABEL
106V2	P0966106V2	MACHINE ID LABEL V2.09.26
107	P0966107	EXTREME SERIES LABEL

REF	PART #	DESCRIPTION
108	P0966108	GRIZZLY NAMEPLATE - LARGE
109	P0966109	GRIZZLY.COM LABEL
110	P0966110	KEEP DOOR CLOSED LABEL
111	P0966111	TOUCH-UP PAINT, GRIZZLY GREEN
201	P0966201	AMPUTATION LABEL
202	P0966202	ROTATION LABEL
204	P0966204	COMBO WARNING LABEL

⚠WARNING

Safety labels help reduce the risk of serious injury caused by machine hazards. If any label comes off or becomes unreadable, the owner of this machine MUST replace it in the original location before resuming operations. For replacements, contact (800) 523-4777 or www.grizzly.com.

BUY PARTS ONLINE AT GRIZZLY.COM!
Scan QR code to visit our Parts Store.

WARRANTY & RETURNS

Grizzly Industrial, Inc. warrants every product it sells for a period of **1 year** to the original purchaser from the date of purchase. This warranty does not apply to defects due directly or indirectly to misuse, abuse, negligence, accidents, repairs or alterations or lack of maintenance. This is Grizzly's sole written warranty and any and all warranties that may be implied by law, including any merchantability or fitness, for any particular purpose, are hereby limited to the duration of this written warranty. We do not warrant or represent that the merchandise complies with the provisions of any law or acts unless the manufacturer so warrants. In no event shall Grizzly's liability under this warranty exceed the purchase price paid for the product and any legal actions brought against Grizzly shall be tried in the State of Washington, County of Whatcom.

We shall in no event be liable for death, injuries to persons or property or for incidental, contingent, special, or consequential damages arising from the use of our products.

The manufacturers reserve the right to change specifications at any time because they constantly strive to achieve better quality equipment. We make every effort to ensure that our products meet high quality and durability standards and we hope you never need to use this warranty.

In the event you need to use this warranty, contact us by mail or phone and give us all the details. We will then issue you a "Return Number," which must be clearly posted on the outside as well as the inside of the carton. We will not accept any item back without this number. Proof of purchase must accompany the merchandise.

Please feel free to write or call us if you have any questions about the machine or the manual.

Thank you again for your business and continued support. We hope to serve you again soon.

For further information about the warranty, visit **https://www.grizzly.com/forms/warranty** or scan the QR code below to be automatically directed to our warranty page.



grizzly.com®

TOOL WEBSITE

Buy Direct and Save with Grizzly® – Trusted, Proven and a Great Value!

~Since 1983~

Visit Our Website Today For Current Specials!

ORDER

24 HOURS A DAY!

1-800-523-4777

