SECTION 10: PARTS

We do our best to stock replacement parts when possible, but we cannot guarantee that all parts shown are available for purchase. Call **(800) 523-4777** or visit **www.grizzly.com/parts** to check for availability.

G0975 Parts

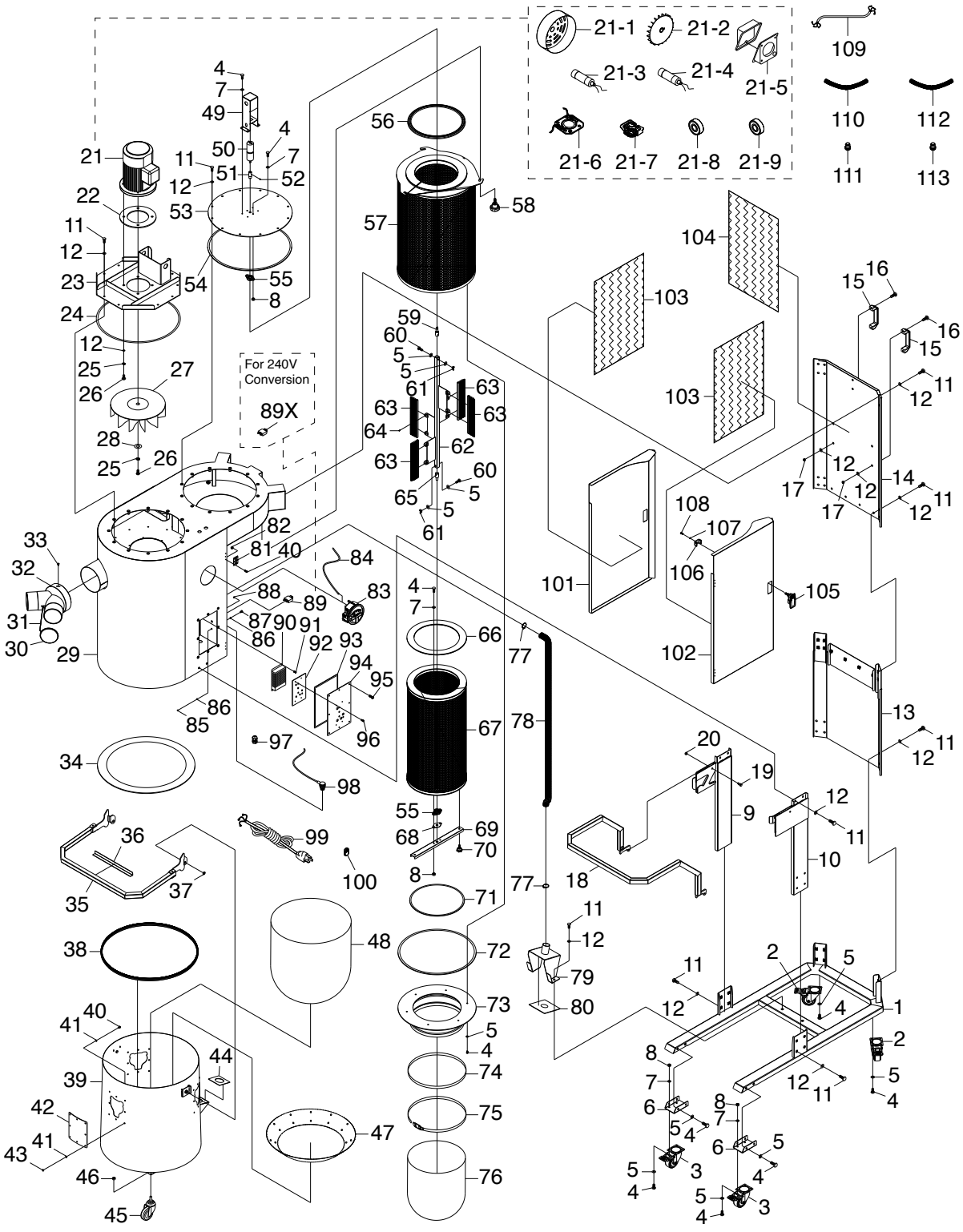

BUY PARTS ONLINE AT GRIZZLY.COM!
Scan QR code to visit our Parts Store.

G0975 Parts List

REF	PART #	DESCRIPTION
1	P0975001	STAND BASE
2	P0975002	CASTER 3", SWIVEL LOCKING
3	P0975003	CASTER 3", LOCKING
4	P0975004	HEX BOLT 1/4-20 X 3/4
5	P0975005	FENDER WASHER 1/4
6	P0975006	CASTER MOUNT
7	P0975007	FLAT WASHER 1/4
8	P0975008	HEX NUT 1/4-20
9	P0975009	LEG, LEFT
10	P0975010	LEG, RIGHT
11	P0975011	HEX BOLT 5/16-18 X 3/4
12	P0975012	FLAT WASHER 5/16
13	P0975013	COVER, LOWER REAR
14	P0975014	COVER, UPPER REAR
15	P0975015	HANDLE
16	P0975016	CAP SCREW 5/16-18 X 3/4
17	P0975017	HEX NUT 5/16-18
18	P0975018	COLLECTION DRUM LOCK HANDLE
19	P0975019	SHOULDER SCREW M6-1 X 11, 8 X 12
20	P0975020	LOCK NUT M6-1
21	P0975021	MOTOR 1.5HP 120/240V 1-PH
21-1	P0975021-1	MOTOR FAN COVER
21-2	P0975021-2	MOTOR FAN
21-3	P0975021-3	S CAPACITOR 400M 125V 1-3/8" X 3-1/8"
21-4	P0975021-4	R CAPACITOR 50M 250V 1-3/8" X 2-3/8"
21-5	P0975021-5	MOTOR JUNCTION BOX
21-6	P0975021-6	CONTACT PLATE
21-7	P0975021-7	CENTRIFUGAL SWITCH
21-8	P0975021-8	BALL BEARING 6205ZZ FRONT
21-9	P0975021-9	BALL BEARING 6202ZZ REAR
22	P0975022	GASKET 135 X 195 X 3MM
23	P0975023	IMPELLER COVER
24	P0975024	GASKET 9 X 8 X 1420MM
25	P0975025	LOCK WASHER 5/16
26	P0975026	HEX BOLT 5/16-18 X 1
27	P0975027	IMPELLER 13-1/2"
28	P0975028	FENDER WASHER 5/16
29	P0975029	MACHINE BODY
30	P0975030	INLET COVER 4"
31	P0975031	BALL CHAIN 19.7"
32	P0975032	INLET ADAPTER 6" X 4" X 2
33	P0975033	TAP SCREW #10 X 1/2
34	P0975034	GASKET 10 X 50 X 1650MM
35	P0975035	COLLECTION DRUM HANDLE
36	P0975036	BUMPER 18 X 8 X 80MM
37	P0975037	EXT RETAINING RING 13MM
38	P0975038	GASKET 11 X 21 X 1650MM RUBBER
39	P0975039	COLLECTION DRUM
40	P0975040	PHLP HD SCR 10-24 X 1/2
41	P0975041	FLAT WASHER 3/16
42	P0975042	DRUM WINDOW 140 X 170 X 3MM ACRYLIC
43	P0975043	ACORN NUT 3/16-24
44	P0975044	GASKET 80 X 85 X 5MM
45	P0975045	CASTER 3", SWIVEL
46	P0975046	HEX NUT 3/8-16
47	P0975047	COLLECTION DRUM VACUUM RING

REF	PART #	DESCRIPTION
48	P0975048	COLLECTION BAG 21-3/4" X 37-1/2"
49	P0975049	FILTER BRUSH MOTOR BRACKET
50	P0975050	FILTER BRUSH MOTOR 3W 24VDC
51	P0975051	BRUSH SPINDLE CONNECTOR
52	P0975052	SET SCREW M4-.7 X 12
53	P0975053	FILTER COVER PLATE
54	P0975054	GASKET 9 X 8 X 1420MM
55	P0975055	PILLOW BEARING UFL000
56	P0975056	GASKET 18 X 8 X 950MM RUBBER
57	P0975057	CANISTER FILTER, HEPA
58	P0975058	KNOB BOLT 3/8-16 X 2
59	P0975059	UPPER SPINDLE HEAD
60	P0975060	HEX BOLT 1/4-20 X 1-1/4
61	P0975061	WING NUT 1/4-20
62	P0975062	BRUSH SPINDLE 735MM
63	P0975063	FILTER BRUSH 250 X 40 X 5MM
64	P0975064	SET SCREW M8-1.25 X 8
65	P0975065	LOWER SPINDLE HEAD
66	P0975066	GASKET 5 X 40 X 930MM
67	P0975067	CANISTER FILTER, POLYESTER
68	P0975068	PILLOW BLOCK BEARING PLATE
69	P0975069	FILTER BRUSH BASE
70	P0975070	KNOB BOLT 1/4-20 X 3/4
71	P0975071	GASKET 3 X 6 X 870MM
72	P0975072	GASKET 3 X 6 X 1310MM
73	P0975073	FILTER BAG FLANGE
74	P0975074	GASKET 5 X 40 X 985MM
75	P0975075	BAG CLAMP 38-1/2"
76	P0975076	FILTER BAG 12-1/4" X 16"
77	P0975077	HOSE CLAMP 1-3/4"
78	P0975078	VACUUM HOSE 1-1/2" X 39.5"
79	P0975079	VACUUM HOSE BRACKET
80	P0975080	GASKET 120 X 110 X 5MM
81	P0975081	HINGE
82	P0975082	HEX NUT 3/16-24
83	P0975083	PRESSURE GAUGE
84	P0975084	HOSE 5 X 8 X 600MM
85	P0975085	HEX NUT M5-.8
86	P0975086	EXT TOOTH WASHER 5MM
87	P0975087	PHLP HD SCR M5-.8 X 12
88	P0975088	HEX NUT M3-.5
89	P0975089	CIRCUIT BREAKER KUOYUH 98 SERIES 20A
89X	P0975089X	CIRCUIT BREAKER KUOYUH 88 SERIES 15A
90	P0975090	POWER SUPPLY MEAN WELL LRS-100-24
91	P0975091	FLAT HD SCR M3-.5 X 10
92	P0975092	CIRCUIT BOARD JY17358AR-V1.1822 REV0
93	P0975093	GASKET 3 X 6 X 880MM
94	P0975094	CONTROL PANEL
95	P0975095	PHLP HD SCR 1/4-20 X 1/2
96	P0975096	FLAT HD SCR M3-.5 X 6
97	P0975097	STRAIN RELIEF PG13.5
98	P0975098	PHOTOELECTRIC SENSOR
99	P0975099	POWER CORD 12G 3W 118" 5-20P
100	P0975100	REMOTE CONTROL
101	P0975101	MAINTENANCE DOOR, LEFT
102	P0975102	MAINTENANCE DOOR, RIGHT

BUY PARTS ONLINE AT GRIZZLY.COM!
Scan QR code to visit our Parts Store.

G0975 Parts List (Cont.)

REF	PART #	DESCRIPTION
103	P0975103	INSULATION FOAM 18" X 28"
104	P0975104	INSULATION FOAM 16" X 24"
105	P0975105	COMPRESSION LATCH
106	P0975106	LATCH MOUNT
107	P0975107	INT TOOTH WASHER 5MM
108	P0975108	HEX BOLT M5-.8 X 16

REF	PART #	DESCRIPTION
109	P0975109	MOTOR CORD 12G 3W 46"
110	P0975110	CONDUIT 3/8 X 31.5"
111	P0975111	CONDUIT FITTING 3/8 X 1/2
112	P0975112	CONDUIT 3/8 X 39.4"
113	P0975113	CONDUIT FITTING 3/8 X 1/2

BUY PARTS ONLINE AT GRIZZLY.COM!
Scan QR code to visit our Parts Store.

G0976 Parts

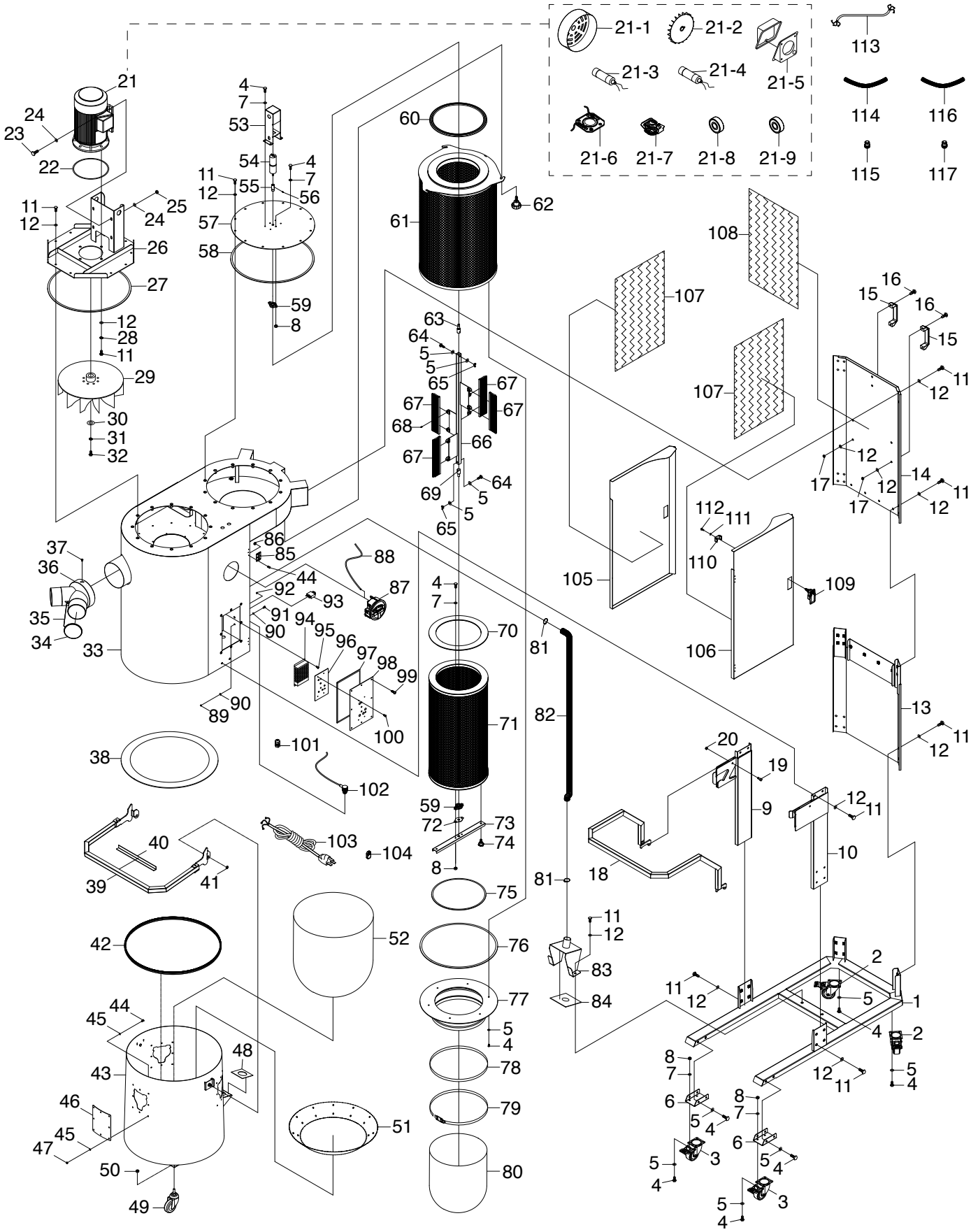

BUY PARTS ONLINE AT GRIZZLY.COM!
Scan QR code to visit our Parts Store.

G0976 Parts List

REF	PART #	DESCRIPTION
1	P0976001	STAND BASE
2	P0976002	CASTER 3", SWIVEL LOCKING
3	P0976003	CASTER 3", LOCKING
4	P0976004	HEX BOLT 1/4-20 X 3/4
5	P0976005	FENDER WASHER 1/4
6	P0976006	CASTER MOUNT
7	P0976007	FLAT WASHER 1/4
8	P0976008	HEX NUT 1/4-20
9	P0976009	LEG, LEFT
10	P0976010	LEG, RIGHT
11	P0976011	HEX BOLT 5/16-18 X 3/4
12	P0976012	FLAT WASHER 5/16
13	P0976013	COVER, LOWER REAR
14	P0976014	COVER, UPPER REAR
15	P0976015	HANDLE
16	P0976016	CAP SCREW 5/16-18 X 3/4
17	P0976017	HEX NUT 5/16-18
18	P0976018	COLLECTION DRUM LOCK HANDLE
19	P0976019	SHOULDER SCREW M6-1 X 11, 8 X 12
20	P0976020	LOCK NUT M6-1
21	P0976021	MOTOR 2HP 220V 1-PH
21-1	P0976021-1	MOTOR FAN COVER
21-2	P0976021-2	MOTOR FAN
21-3	P0976021-3	S CAPACITOR 600M 125V 2" X 4"
21-4	P0976021-4	R CAPACITOR 40M 300V 1-9/16" X 2-3/4"
21-5	P0976021-5	MOTOR JUNCTION BOX
21-6	P0976021-6	CONTACT PLATE
21-7	P0976021-7	CENTRIFUGAL SWITCH
21-8	P0976021-8	BALL BEARING 6205ZZ FRONT
21-9	P0976021-9	BALL BEARING 6202ZZ REAR
22	P0976022	GASKET 3 X 6 X 560MM
23	P0976023	HEX BOLT 3/8-16 X 1-1/2
24	P0976024	FLAT WASHER 3/8
25	P0976025	LOCK NUT 3/8-16
26	P0976026	IMPELLER COVER
27	P0976027	GASKET 9 X 8 X 1410MM
28	P0976028	LOCK WASHER 5/16
29	P0976029	IMPELLER 14-1/2"
30	P0976030	FENDER WASHER 3/8
31	P0976031	LOCK WASHER 3/8
32	P0976032	HEX BOLT 3/8-16 X 1
33	P0976033	MACHINE BODY
34	P0976034	INLET COVER 4"
35	P0976035	BALL CHAIN 19.7"
36	P0976036	INLET ADAPTER 6" X 4" X 2
37	P0976037	TAP SCREW #10 X 1/2
38	P0976038	GASKET 10 X 50 X 1700MM RUBBER
39	P0976039	COLLECTION DRUM HANDLE
40	P0976040	BUMPER 18 X 8 X 80MM
41	P0976041	EXT RETAINING RING 13MM
42	P0976042	GASKET 11 X 21 X 1650MM
43	P0976043	COLLECTION DRUM
44	P0976044	PHLP HD SCR 10-24 X 1/2
45	P0976045	FLAT WASHER 3/16
46	P0976046	DRUM WINDOW 140 X 170 X 3MM ACRYLIC
47	P0976047	ACORN NUT 3/16-24

REF	PART #	DESCRIPTION
48	P0976048	GASKET 80 X 85 X 5MM
49	P0976049	CASTER 3", SWIVEL
50	P0976050	HEX NUT 3/8-16
51	P0976051	COLLECTION DRUM VACUUM RING
52	P0976052	COLLECTION BAG 21-3/4" X 37-1/2"
53	P0976053	FILTER BRUSH MOTOR BRACKET
54	P0976054	FILTER BRUSH MOTOR 3W 24VDC
55	P0976055	BRUSH SPINDLE CONNECTOR
56	P0976056	SET SCREW M4-.7 X 12
57	P0976057	FILTER COVER PLATE
58	P0976058	GASKET 9 X 8 X 1420MM
59	P0976059	PILLOW BEARING UFL000
60	P0976060	GASKET 18 X 8 X 950MM
61	P0976061	CANISTER FILTER, HEPA
62	P0976062	KNOB BOLT 3/8-16 X 2
63	P0976063	UPPER SPINDLE HEAD
64	P0976064	HEX BOLT 1/4-20 X 1-1/4
65	P0976065	WING NUT 1/4-20
66	P0976066	BRUSH SPINDLE 735MM
67	P0976067	FILTER BRUSH 250 X 40 X 5MM
68	P0976068	SET SCREW M8-1.25 X 8
69	P0976069	LOWER SPINDLE HEAD
70	P0976070	GASKET 5 X 40 X 930MM
71	P0976071	CANISTER FILTER, POLYESTER
72	P0976072	PILLOW BLOCK BEARING PLATE
73	P0976073	FILTER BRUSH BASE
74	P0976074	KNOB BOLT 1/4-20 X 3/4
75	P0976075	GASKET 3 X 6 X 870MM
76	P0976076	GASKET 3 X 6 X 1310MM
77	P0976077	FILTER BAG FLANGE
78	P0976078	GASKET 5 X 40 X 985MM
79	P0976079	BAG CLAMP 38-1/2"
80	P0976080	FILTER BAG 12-1/4" X 16"
81	P0976081	HOSE CLAMP 1-3/4"
82	P0976082	VACUUM HOSE 1-1/2" X 45"
83	P0976083	VACUUM HOSE BRACKET
84	P0976084	GASKET 120 X 110 X 5MM
85	P0976085	HINGE
86	P0976086	HEX NUT 3/16-24
87	P0976087	PRESSURE GAUGE
88	P0976088	HOSE 5 X 8 X 600MM
89	P0976089	HEX NUT M5-.8
90	P0976090	EXT TOOTH WASHER 5MM
91	P0976091	PHLP HD SCR M5-.8 X 12
92	P0976092	HEX NUT M3-.5
93	P0976093	CIRCUIT BREAKER KUOYUH 98 SERIES 20A
94	P0976094	POWER SUPPLY MEAN WELL LRS-100-24
95	P0976095	FLAT HD SCR M3-.5 X 10
96	P0976096	CIRCUIT BOARD JY17358AR-V1.1822 REV0
97	P0976097	GASKET 3 X 6 X 880MM
98	P0976098	CONTROL PANEL
99	P0976099	PHLP HD SCR 1/4-20 X 1/2
100	P0976100	FLAT HD SCR M3-.5 X 6
101	P0976101	STRAIN RELIEF PG13.5
102	P0976102	PHOTOELECTRIC SENSOR
103	P0976103	POWER CORD 14G 3W 118" 6-15P

BUY PARTS ONLINE AT GRIZZLY.COM!
Scan QR code to visit our Parts Store.

G0976 Parts List (Cont.)

REF	PART #	DESCRIPTION
104	P0976104	REMOTE CONTROL
105	P0976105	MAINTENANCE DOOR, LEFT
106	P0976106	MAINTENANCE DOOR, RIGHT
107	P0976107	INSULATION FOAM 18" X 28"
108	P0976108	INSULATION FOAM 16" X 24"
109	P0976109	COMPRESSION LATCH
110	P0976110	LATCH MOUNT

REF	PART #	DESCRIPTION
111	P0976111	INT TOOTH WASHER 5MM
112	P0976112	HEX BOLT M5-.8 X 16
113	P0976113	MOTOR CORD 14G 3W 53"
114	P0976114	CONDUIT 3/8 X 31.5"
115	P0976115	CONDUIT FITTING 3/8 X 1/2
116	P0976116	CONDUIT 3/8 X 39.4"
117	P0976117	CONDUIT FITTING 3/8 X 1/2

BUY PARTS ONLINE AT GRIZZLY.COM!
Scan QR code to visit our Parts Store.

G0977 Parts

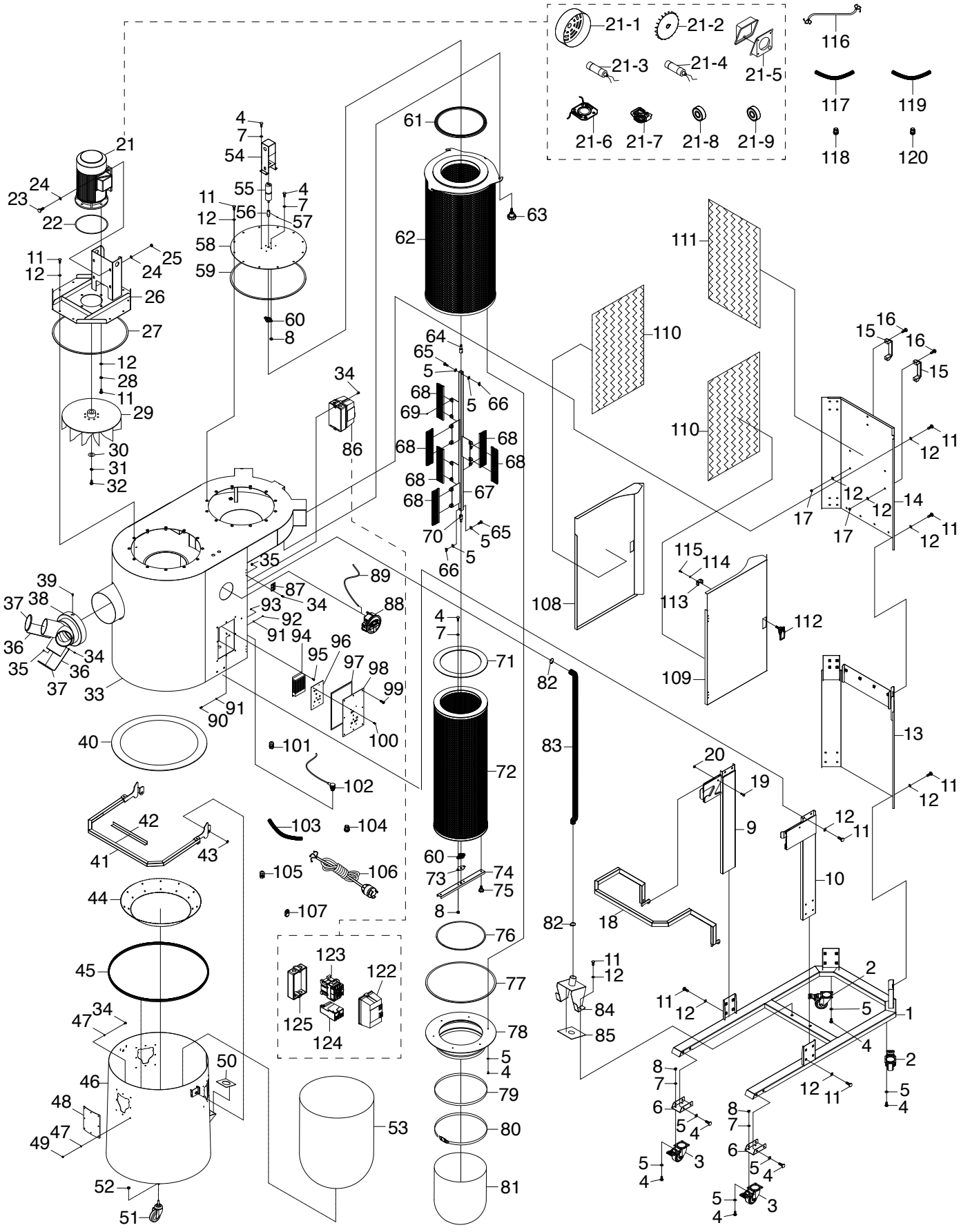

BUY PARTS ONLINE AT GRIZZLY.COM!
Scan QR code to visit our Parts Store.

G0977 Parts List

REF	PART #	DESCRIPTION
1	P0977001	STAND BASE
2	P0977002	CASTER 3", SWIVEL LOCKING
3	P0977003	CASTER 3", LOCKING
4	P0977004	HEX BOLT 1/4-20 X 3/4
5	P0977005	FENDER WASHER 1/4
6	P0977006	CASTER MOUNT
7	P0977007	FLAT WASHER 1/4
8	P0977008	HEX NUT 1/4-20
9	P0977009	LEG, LEFT
10	P0977010	LEG, RIGHT
11	P0977011	HEX BOLT 5/16-18 X 3/4
12	P0977012	FLAT WASHER 5/16
13	P0977013	COVER, LOWER REAR
14	P0977014	COVER, UPPER REAR
15	P0977015	HANDLE
16	P0977016	CAP SCREW 5/16-18 X 3/4
17	P0977017	HEX NUT 5/16-18
18	P0977018	COLLECTION DRUM LOCK HANDLE
19	P0977019	SHOULDER SCREW M6-1 X 11, 8 X 12
20	P0977020	LOCK NUT M6-1
21	P0977021	MOTOR 3HP 220V 1-PH
21-1	P0977021-1	MOTOR FAN COVER
21-2	P0977021-2	MOTOR FAN
21-3	P0977021-3	S CAPACITOR 400M 250V 2" X 4"
21-4	P0977021-4	R CAPACITOR 30M 400V 1-3/4" X 3-3/8"
21-5	P0977021-5	MOTOR JUNCTION BOX
21-6	P0977021-6	CONTACT PLATE
21-7	P0977021-7	CENTRIFUGAL SWITCH
21-8	P0977021-8	BALL BEARING 6205ZZ FRONT
21-9	P0977021-9	BALL BEARING 6202ZZ REAR
22	P0977022	GASKET 3 X 6 X 560MM
23	P0977023	HEX BOLT 3/8-16 X 1-1/2
24	P0977024	FLAT WASHER 3/8
25	P0977025	LOCK NUT 3/8-16
26	P0977026	IMPELLER COVER
27	P0977027	GASKET 9 X 8 X 1450MM
28	P0977028	LOCK WASHER 5/16
29	P0977029	IMPELLER 15-1/2"
30	P0977030	FENDER WASHER 3/8
31	P0977031	LOCK WASHER 3/8
32	P0977032	HEX BOLT 3/8-16 X 1
33	P0977033	MACHINE BODY
34	P0977034	PHLP HD SCR 10-24 X 1/2
35	P0977035	HEX NUT 3/16-24
36	P0977036	BALL CHAIN 19.7"
37	P0977037	INLET COVER 4"
38	P0977038	INLET ADAPTER 8" X 4" X 3
39	P0977039	TAP SCREW #10 X 1/2
40	P0977040	GASKET 10 X 50 X 1970MM RUBBER
41	P0977041	COLLECTION DRUM HANDLE
42	P0977042	BUMPER 18 X 8 X 80MM
43	P0977043	EXT RETAINING RING 13MM
44	P0977044	COLLECTION DRUM VACUUM RING
45	P0977045	GASKET, RUBBER 11 X 21 X 1890MM

REF	PART #	DESCRIPTION
46	P0977046	COLLECTION DRUM
47	P0977047	FLAT WASHER #10
48	P0977048	DRUM WINDOW 140 X 170 X 3MM ACRYLIC
49	P0977049	ACORN NUT 3/16-24
50	P0977050	GASKET 80 X 85 X 5MM
51	P0977051	CASTER 3", SWIVEL
52	P0977052	HEX NUT 3/8-16
53	P0977053	COLLECTION BAG 24-3/4" X 37-1/2"
54	P0977054	FILTER BRUSH MOTOR BRACKET
55	P0977055	FILTER BRUSH MOTOR 3W 24VDC
56	P0977056	BRUSH SPINDLE CONNECTOR
57	P0977057	SET SCREW M4-.7 X 12
58	P0977058	FILTER COVER PLATE
59	P0977059	GASKET 9 X 8 X 1420MM
60	P0977060	PILLOW BEARING UFL000
61	P0977061	GASKET 18 X 8 X 950MM
62	P0977062	CANISTER FILTER, HEPA
63	P0977063	KNOB BOLT 3/8-16 X 2
64	P0977064	UPPER SPINDLE HEAD
65	P0977065	HEX BOLT 1/4-20 X 1-1/4
66	P0977066	WING NUT 1/4-20
67	P0977067	BRUSH SPINDLE 995MM
68	P0977068	FILTER BRUSH 250 X 40 X 5MM
69	P0977069	SET SCREW M8-1.25 X 8
70	P0977070	LOWER SPINDLE HEAD
71	P0977071	GASKET 5 X 40 X 930MM
72	P0977072	CANISTER FILTER, POLYESTER
73	P0977073	PILLOW BLOCK BEARING PLATE
74	P0977074	FILTER BRUSH BASE
75	P0977075	KNOB BOLT 1/4-20 X 3/4
76	P0977076	GASKET 3 X 6 X 870MM
77	P0977077	GASKET 3 X 6 X 1310MM
78	P0977078	FILTER BAG FLANGE
79	P0977079	GASKET 5 X 40 X 985MM
80	P0977080	BAG CLAMP 38-1/2"
81	P0977081	FILTER BAG 12-1/4" X 16"
82	P0977082	HOSE CLAMP 1-3/4"
83	P0977083	VACUUM HOSE 1-1/2" X 45"
84	P0977084	VACUUM HOSE BRACKET
85	P0977085	GASKET 120 X 110 X 5MM
86	P0977086	MAGNETIC SWITCH MS-18D
87	P0977087	HINGE
88	P0977088	PRESSURE GAUGE
89	P0977089	HOSE 5 X 8 X 600MM
90	P0977090	PHLP HD SCR M5-.8 X 12
91	P0977091	EXT TOOTH WASHER 5MM
92	P0977092	HEX NUT M5-.8
93	P0977093	HEX NUT M3-.5
94	P0977094	POWER SUPPLY MEAN WELL LRS-100-24
95	P0977095	FLAT HD SCR M3-.5 X 10
96	P0977096	CIRCUIT BOARD JY17358AR-V1.1822 REV0
97	P0977097	GASKET 3 X 6 X 880MM
98	P0977098	CONTROL PANEL
99	P0977099	PHLP HD SCR 1/4-20 X 1/2

BUY PARTS ONLINE AT GRIZZLY.COM!
Scan QR code to visit our Parts Store.

G0977 Parts List (Cont.)

REF	PART #	DESCRIPTION
100	P0977100	FLAT HD SCR M3-.5 X 6
101	P0977101	STRAIN RELIEF PG13.5
102	P0977102	PHOTOELECTRIC SENSOR
103	P0977103	CONDUIT 3/8" X 30.3"
104	P0977104	CONDUIT FITTING 3/8 X 1/2
105	P0977105	STRAIN RELIEF PG13.5
106	P0977106	POWER CORD 12G 3W 118" L6-30P
107	P0977107	REMOTE CONTROL
108	P0977108	MAINTENANCE DOOR, LEFT
109	P0977109	MAINTENANCE DOOR, RIGHT
110	P0977110	INSULATION FOAM 20" X 27.5"
111	P0977111	INSULATION FOAM 18" X 23.5"
112	P0977112	COMPRESSION LATCH

REF	PART #	DESCRIPTION
113	P0977113	LATCH MOUNT
114	P0977114	INT TOOTH WASHER 5MM
115	P0977115	HEX BOLT M5-.8 X 16
116	P0977116	MOTOR CORD 12G 3W 65"
117	P0977117	CONDUIT 3/8" X 56"
118	P0977118	CONDUIT FITTING 3/8 X 1/2
119	P0977119	CONDUIT 3/8" X 43.3"
120	P0977120	CONDUIT FITTING 3/8 X 1/2
122	P0977122	MAGNETIC SWITCH COVER
123	P0977123	CONTACTOR MS-18D 220V
124	P0977124	OL RELAY NHD 220V 24-28A
125	P0977125	MAGNETIC SWITCH BOX

BUY PARTS ONLINE AT GRIZZLY.COM!
Scan QR code to visit our Parts Store.

Labels & Cosmetics

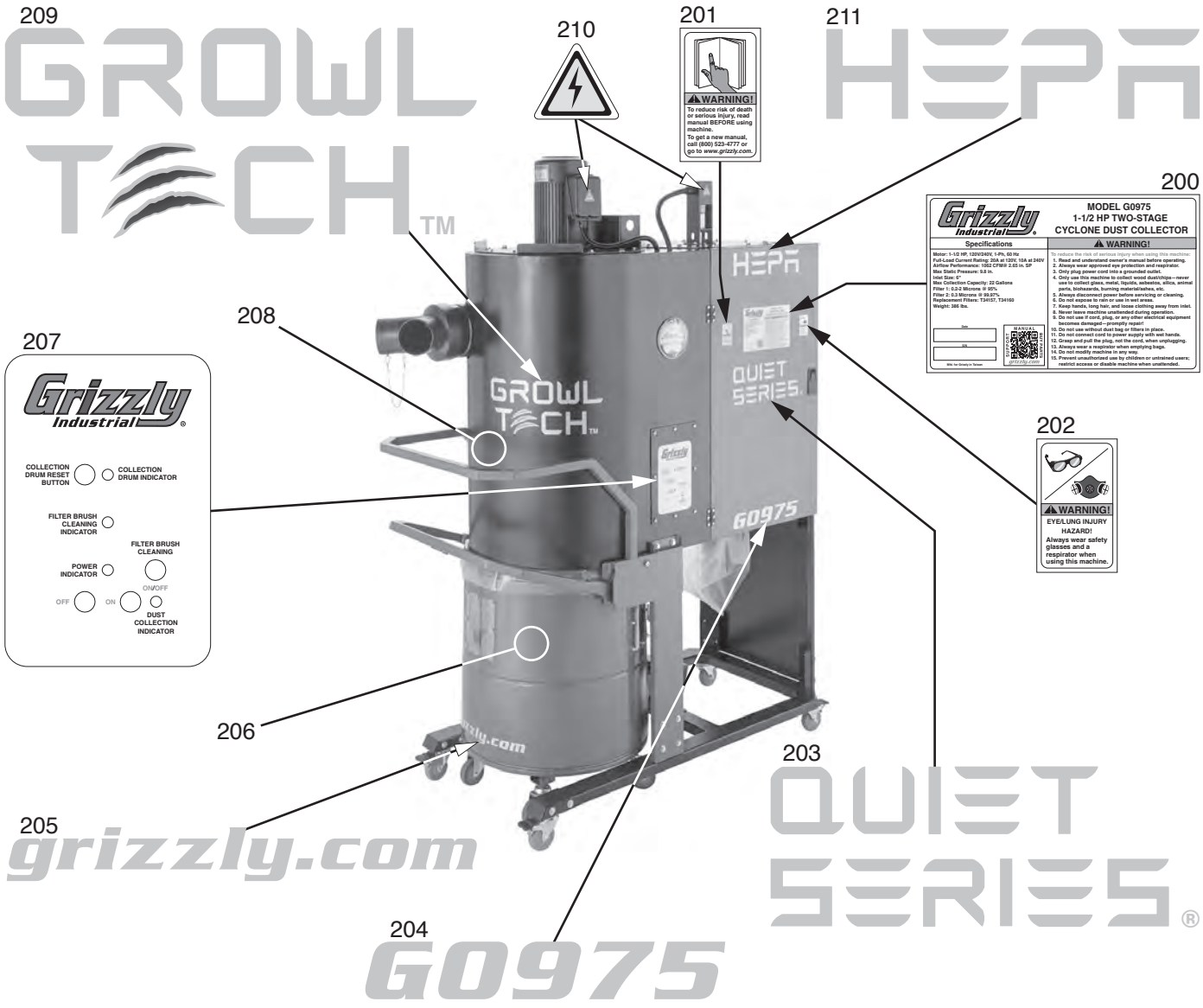

REF	PART #	DESCRIPTION
200	P0975200	MACHINE ID LABEL (G0975)
200	P0976200	MACHINE ID LABEL (G0976)
200	P0977200	MACHINE ID LABEL (G0977)
201	P0975201	READ MANUAL LABEL
202	P0975202	RESPIRATOR/GLASSES LABEL
203	P0975203	QUIET SERIES LABEL
204	P0975204	MODEL NUMBER LABEL (G0975)
204	P0976204	MODEL NUMBER LABEL (G0976)

REF	PART #	DESCRIPTION
204	P0977204	MODEL NUMBER LABEL (G0977)
205	P0975205	GRIZZLY.COM LABEL
206	P0975206	TOUCH-UP PAINT, GRIZZLY GREEN
207	P0975207	CONTROL PANEL LABEL
208	P0975208	TOUCH-UP PAINT, GLOSSY BLACK
209	P0975209	GROWL TECH LABEL
210	P0975210	ELECTRICITY LABEL
211	P0975211	HEPA LABEL

⚠WARNING

Safety labels help reduce the risk of serious injury caused by machine hazards. If any label comes off or becomes unreadable, the owner of this machine MUST replace it in the original location before resuming operations. For replacements, contact (800) 523-4777 or www.grizzly.com.

BUY PARTS ONLINE AT GRIZZLY.COM!
Scan QR code to visit our Parts Store.