MODEL G0945/G0946/G0947
6" & 8" BENCHTOP JOINTERS
OWNER'S MANUAL
(For models manufactured since 12/23)


(G0945)


(G0946)


(G0947)

C US
262149

COPYRIGHT © JULY, 2021 BY GRIZZLY INDUSTRIAL, INC., REVISED NOVEMBER, 2023 (KS)
WARNING: NO PORTION OF THIS MANUAL MAY BE REPRODUCED IN ANY SHAPE OR FORM WITHOUT THE WRITTEN APPROVAL OF GRIZZLY INDUSTRIAL, INC.
#KS21841 PRINTED IN TAIWAN V3.11.23

******Keep for Future Reference******

⚠ WARNING!

This manual provides critical safety instructions on the proper setup, operation, maintenance, and service of this machine/tool. Save this document, refer to it often, and use it to instruct other operators.

Failure to read, understand and follow the instructions in this manual may result in fire or serious personal injury—including amputation, electrocution, or death.

The owner of this machine/tool is solely responsible for its safe use. This responsibility includes but is not limited to proper installation in a safe environment, personnel training and usage authorization, proper inspection and maintenance, manual availability and comprehension, application of safety devices, cutting/sanding/grinding tool integrity, and the usage of personal protective equipment.

The manufacturer will not be held liable for injury or property damage from negligence, improper training, machine modifications or misuse.

⚠ WARNING!

Some dust created by power sanding, sawing, grinding, drilling, and other construction activities contains chemicals known to the State of California to cause cancer, birth defects or other reproductive harm. Some examples of these chemicals are:

- **Lead from lead-based paints.**
- **Crystalline silica from bricks, cement and other masonry products.**
- **Arsenic and chromium from chemically-treated lumber.**

Your risk from these exposures varies, depending on how often you do this type of work. To reduce your exposure to these chemicals: Work in a well ventilated area, and work with approved safety equipment, such as those dust masks that are specially designed to filter out microscopic particles.

Table of Contents

INTRODUCTION 2
- Contact Info 2
- Manual Accuracy 2
- Identification 3
- Controls & Components 4
- G0945 Machine Data Sheet 5
- G0946 Machine Data Sheet 7
- G0947 Machine Data Sheet 9

SECTION 1: SAFETY 11
- Safety Instructions for Machinery 11
- Additional Safety for Jointers 13

SECTION 2: POWER SUPPLY 14

SECTION 3: SETUP 16
- Needed for Setup 16
- Unpacking 16
- Inventory 17
- Cleanup 18
- Site Considerations 18
- Bench Mounting 19
- Assembly 19
- Dust Collection 21
- Test Run 22

SECTION 4: OPERATIONS 23
- Operation Overview 23
- Stock Inspection 24
- Setting Depth of Cut 25
- Squaring Stock 26
- Surface Planing 27
- Edge Jointing 28
- Bevel Cutting 29

SECTION 5: ACCESSORIES 30

SECTION 6: MAINTENANCE 32
- Schedule 32
- Cleaning & Protecting 32
- Lubrication 32

SECTION 7: SERVICE 33
- Troubleshooting 33
- Rotating/Replacing Inserts (G0946/G0947) 36
- Checking/Setting Knives (G0945) 37
- Checking/Adjusting Table Parallelism 40
- Checking/Adjusting Extension Parallelism (G0947) 42
- Checking/Adjusting Fence Positive Stops 43
- Replacing/Tensioning Belt 45
- Replacing Motor Brushes 46

SECTION 8: WIRING 47
- Wiring Safety Instructions 47
- Wiring Diagram 48

SECTION 9: PARTS 49
- G0945 Main 49
- G0946 Main 51
- G0947 Main 53
- Labels & Cosmetics 55

WARRANTY & RETURNS 57

INTRODUCTION

Contact Info

We stand behind our machines! If you have questions or need help, contact us with the information below. Before contacting, make sure you get the **serial number** and **manufacture date** from the machine ID label. This will help us help you faster.

Grizzly Technical Support
1815 W. Battlefield
Springfield, MO 65807
Phone: (570) 546-9663
Email: techsupport@grizzly.com

We want your feedback on this manual. What did you like about it? Where could it be improved? Please take a few minutes to give us feedback.

Grizzly Documentation Manager
P.O. Box 2069
Bellingham, WA 98227-2069
Email: manuals@grizzly.com

Manual Accuracy

We are proud to provide a high-quality owner's manual with your new machine!

We made every effort to be exact with the instructions, specifications, drawings, and photographs in this manual. Sometimes we make mistakes, but our policy of continuous improvement also means that **sometimes the machine you receive is slightly different than shown in the manual**.

If you find this to be the case, and the difference between the manual and machine leaves you confused or unsure about something, check our website for an updated version. We post current manuals and manual updates for free on our website at **www.grizzly.com**.

Alternatively, you can call our Technical Support for help. Before calling, make sure you write down the **manufacture date** and **serial number** from the machine ID label (see below). This information is required for us to provide proper tech support, and it helps us determine if updated documentation is available for your machine.

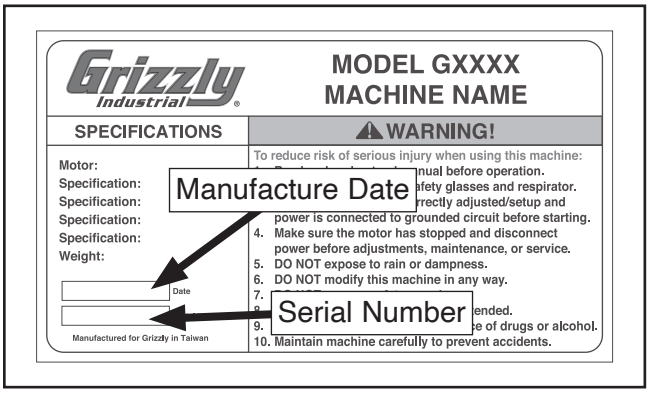

Identification

Become familiar with the names and locations of the controls and features shown below to better understand the instructions in this manual.

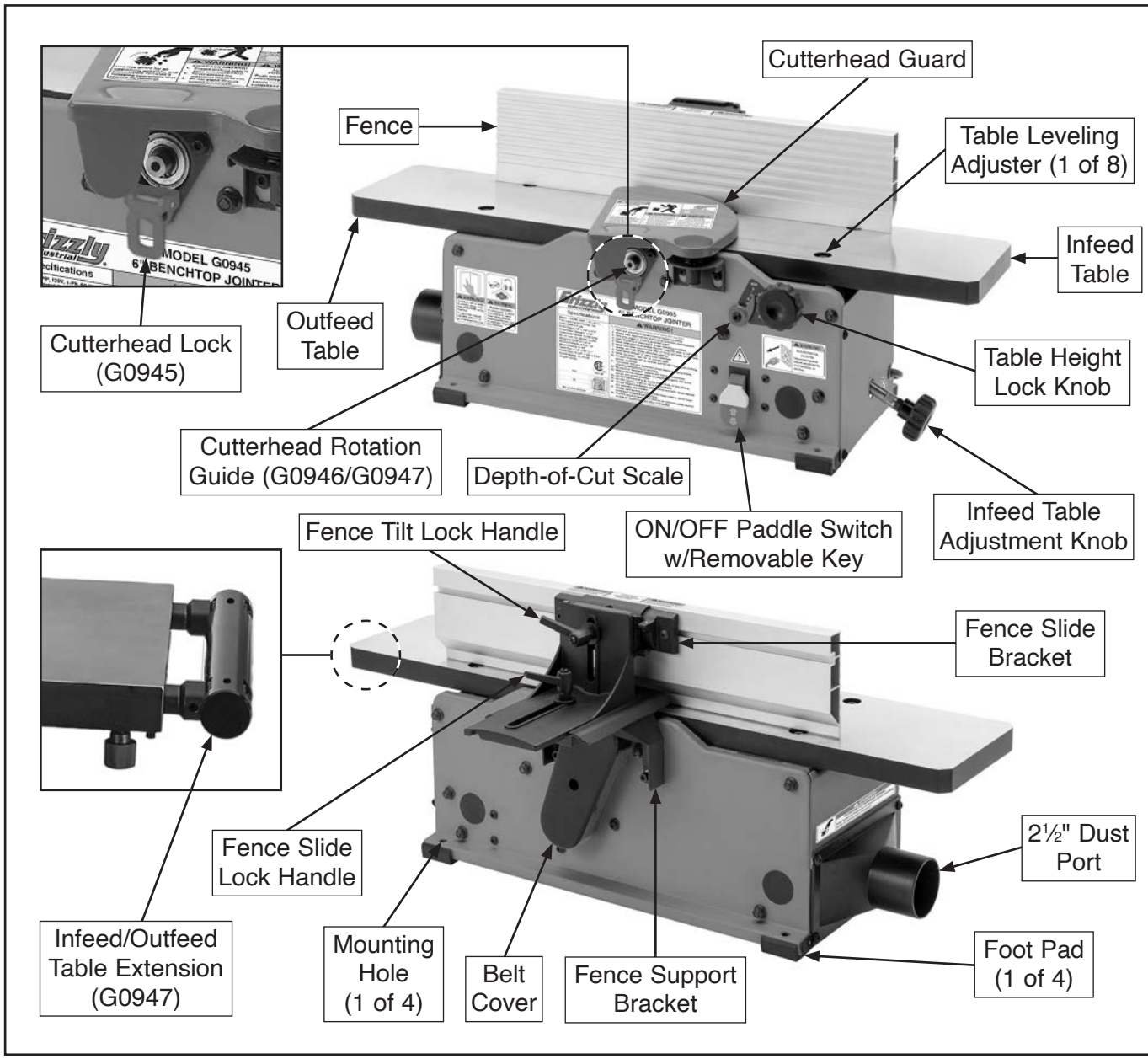

⚠WARNING

For Your Own Safety Read Instruction Manual Before Operating Jointer

a) Wear eye protection.
b) Always keep cutterhead and drive guards in place and in proper operating condition.
c) Never cut deeper than ⅛" in one pass.
d) Always use hold-down or push blocks when jointing material narrower than 3" or planing material thinner than 3".
e) Never perform cuts on pieces shorter than 10" in length.

Controls & Components

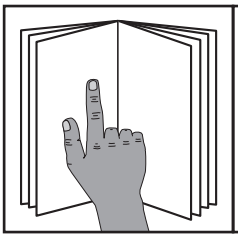

⚠WARNING

To reduce your risk of serious injury, read this entire manual BEFORE using machine.

Refer to the following figures and descriptions to become familiar with the basic controls and components of this machine. Understanding these items and how they work will help you understand the rest of the manual and minimize your risk of injury when operating this machine.

Main Components

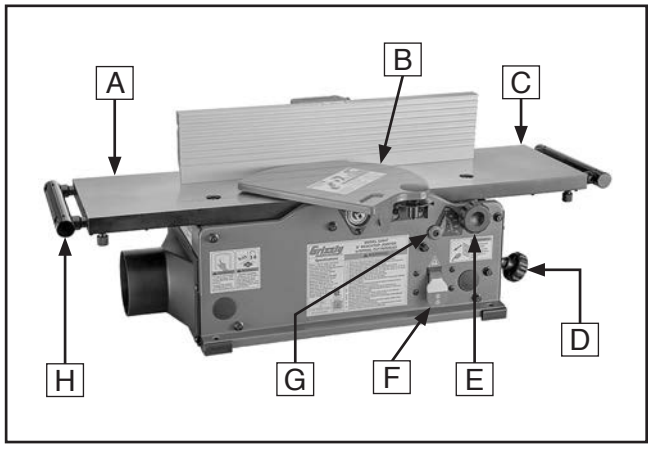

Figure 1. Main components.

A. Outfeed Table: Supports workpiece after it passes over cutterhead.

B. Cutterhead Guard: Covers cutterhead until pushed aside by workpiece during operation. When workpiece leaves cutterhead, guard springs back to its starting position. DO NOT operate jointer if guard is not functioning properly.

C. Infeed Table: Supports workpiece before it reaches cutterhead. Height of infeed table relative to cutterhead determines depth of cut.

D. Infeed Table Adjustment Knob: Adjusts height of infeed table to control depth of cut.

E. Table Height Lock Knob: Tighten to secure infeed table position; loosen for making table adjustments.

F. ON/OFF Paddle Switch w/Removable Key: Turns motor ***ON*** when moved up; turns motor ***OFF*** when pressed down. Removal of yellow key disables switch, preventing motor operation.

G. Depth-of-Cut Scale: Shows depth of cut (per pass).

H. Infeed/Outfeed Table Extensions (G0947): Supports large workpieces beyond the length of the infeed/outfeed tables.

Fence & Support Components

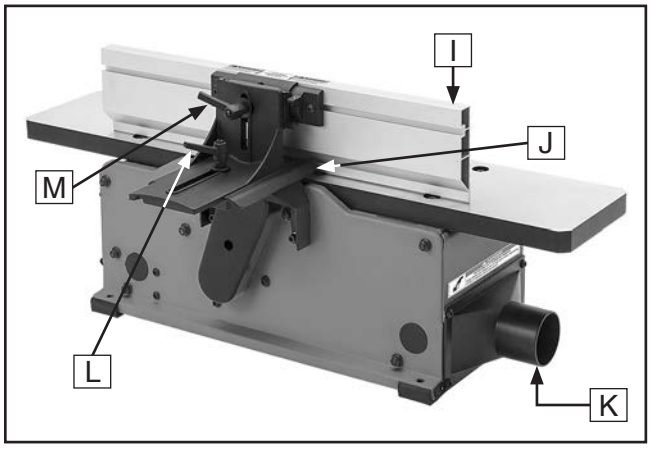

Figure 2. Fence components.

I. Fence: Supports workpiece laterally as it moves across cutterhead; determines angle of cut when edge or bevel joining.

J. Fence Bracket Assembly: Changes position of fence relative to tables and secures it in position during operation.

K. Dust Port: Connects machine to dust collection system. ALWAYS remove dust port if operating machine without dust collection!

L. Fence Slide Lock Handle: Adjusts position of fence over tables. ALWAYS tighten lock before beginning operations.

M. Fence Tilt Lock Handle: Secures fence tilt angle. Fence tilt can be adjusted between 90º–135º. ALWAYS tighten lock before beginning operations.

MACHINE DATA SHEET

Customer Service #: (570) 546-9663 · To Order Call: (800) 523-4777 · Fax #: (800) 438-5901

MODEL G0945 6" BENCHTOP JOINTER

Product Dimensions:

Weight..... 43 lbs.
Width (side-to-side) x Depth (front-to-back) x Height..... 30 x 17-1/2 x 13 in.
Footprint (Length x Width)..... 19 x 9-1/2 in.

Shipping Dimensions:

Type..... Cardboard Box
Content..... Machine
Weight..... 44 lbs.
Length x Width x Height..... 33 x 13 x 12 in.

Electrical:

Power Requirement..... 120V, Single-Phase, 60 Hz
Full-Load Current Rating..... 10A
Minimum Circuit Size..... 15A
Connection Type..... Cord & Plug
Power Cord Included..... Yes
Power Cord Length..... 72 in.
Power Cord Gauge..... 18 AWG
Plug Included..... Yes
Included Plug Type..... 5-15
Switch Type..... Paddle Safety Switch w/Removable Key

Motors:

Main

Horsepower..... 1-1/2 HP
Phase..... Single-Phase
Amps..... 10A
Speed..... 19,000 RPM
Type..... Universal
Power Transfer ..... Belt
Bearings..... Shielded & Permanently Lubricated

Main Specifications:

Main Specifications

Jointer Size..... 6 in.
Bevel Jointing..... 0 - 45 deg.
Maximum Width of Cut..... 6 in.
Maximum Depth of Cut..... 1/8 in.
Minimum Workpiece Length..... 10 in.
Minimum Workpiece Thickness..... 1/2 in.
Number of Cuts Per Minute..... 22,000

Fence Information

Fence Length..... 19-3/4 in.
Fence Width..... 7/8 in.
Fence Height..... 4-5/16 in.

Cutterhead Information

Cutterhead Type	Straight Knife
Cutterhead Diameter	1-7/8 in.
Cutterhead Speed	11,000 RPM

Knife Information

Number of Knives	2
Knife Type	SK5 Steel, Single-Sided
Knife Length	6-1/4 in.
Knife Width	7/8 in.
Knife Thickness	1/16 in.
Knife Adjustment	Cap Screws

Table Information

Table Length	30 in.
Table Width	6-1/4 in.
Table Thickness	1 in.
Floor to Table Height	8-5/16 in.
Table Adjustment Type	Knob
Table Movement Type	Swing

Construction

Body Assembly	Pre-Formed Steel
Fence Assembly	Extruded Aluminum
Guard	Stamped Steel
Table	Cast Aluminum
Paint Type/Finish	Enamel

Other Information

Number of Dust Ports	1
Dust Port Size	2-1/2 in.

Other Specifications:

Country of Origin	Taiwan
Warranty	1 Year
Approximate Assembly & Setup Time	20 Minutes
Serial Number Location	Machine ID Label
Sound Rating	90 - 92 dB
ISO 9001 Factory	Yes
Certified by a Nationally Recognized Testing Laboratory (NRTL)	Yes

Features:

Straight-Knife Cutterhead with Two SK5 Steel Knives
2-1/2" Dust Port
Cast Aluminum Infeed and Outfeed Tables
Infeed Table Height Adjustment Lock

Accessories Included:

Two Safety Push Blocks
Torx T-25 T-Handle Driver
Hex Wrenches 2.5, 4mm

MACHINE DATA SHEET

Customer Service #: (570) 546-9663 · To Order Call: (800) 523-4777 · Fax #: (800) 438-5901

MODEL G0946 6" BENCHTOP JOINTER WITH SPIRAL-TYPE CUTTERHEAD

Product Dimensions:

Weight	43 lbs.
Width (side-to-side) x Depth (front-to-back) x Height	30 x 17-1/2 x 13 in.
Footprint (Length x Width)	19 x 9-1/2 in.

Shipping Dimensions:

Type	Cardboard Box
Content	Machine
Weight	44 lbs.
Length x Width x Height	33 x 13 x 12 in.

Electrical:

Power Requirement	120V, Single-Phase, 60 Hz
Full-Load Current Rating	10A
Minimum Circuit Size	15A
Connection Type	Cord & Plug
Power Cord Included	Yes
Power Cord Length	72 in.
Power Cord Gauge	18 AWG
Plug Included	Yes
Included Plug Type	5-15
Switch Type	Paddle Safety Switch w/Removable Key

Motors:

Main

Horsepower	1-1/2 HP
Phase	Single-Phase
Amps	10A
Speed	19,000 RPM
Type	Universal
Power Transfer	Belt
Bearings	Shielded & Permanently Lubricated

Main Specifications:

Main Specifications

Jointer Size	6 in.
Bevel Jointing	0 - 45 deg.
Maximum Width of Cut	6 in.
Maximum Depth of Cut	1/8 in.
Minimum Workpiece Length	10 in.
Minimum Workpiece Thickness	1/2 in.
Number of Cuts Per Minute	66,000

Fence Information

Fence Length	19-3/4 in.
Fence Width	7/8 in.
Fence Height	4-1/4 in.

Cutterhead Information

Cutterhead Type	Spiral
Cutterhead Diameter	2 in.
Number of Cutter Rows	6
Number of Indexable Cutters	12
Cutterhead Speed	11,000 RPM

Cutter Insert Information

Cutter Insert Type	Indexable HSS
Cutter Insert Length	14mm
Cutter Insert Width	14mm
Cutter Insert Thickness	2mm

Table Information

Table Length	30 in.
Table Width	6-1/4 in.
Table Thickness	1 in.
Floor to Table Height	8-5/16 in.
Table Adjustment Type	Thread Adjustment
Table Movement Type	Knob

Construction

Body Assembly	Pre-Formed Steel
Fence Assembly	Extruded Aluminum
Guard	Stamped Steel
Table	Cast Aluminum
Paint Type/Finish	Enamel

Other Information

Number of Dust Ports	1
Dust Port Size	2-1/2 in.

Other Specifications:

Country of Origin	Taiwan
Warranty	1 Year
Approximate Assembly & Setup Time	20 Minutes
Serial Number Location	Machine ID Label
Sound Rating	92 - 94 dB
ISO 9001 Factory	Yes
Certified by a Nationally Recognized Testing Laboratory (NRTL)	Yes

Features:

Spiral Cutterhead with 12 Indexable HSS Inserts
2-1/2" Dust Port
Cast Aluminum Infeed and Outfeed Tables
Infeed Table Height Adjustment Lock

Accessories Included:

Two Safety Push Blocks
Torx T-25 T-Handle Driver
Hex Wrenches 2.5, 4mm

MACHINE DATA SHEET

Customer Service #: (570) 546-9663 · To Order Call: (800) 523-4777 · Fax #: (800) 438-5901

MODEL G0947 8" BENCHTOP JOINTER WITH SPIRAL-TYPE CUTTERHEAD

Product Dimensions:

Weight	50 lbs.
Width (side-to-side) x Depth (front-to-back) x Height	52 x 20 x 13 in.
Footprint (Length x Width)	19 x 13-1/2 in.

Shipping Dimensions:

Type	Cardboard Box
Content	Machine
Weight	59 lbs.
Length x Width x Height	38 x 16 x 13 in.

Electrical:

Power Requirement	120V, Single-Phase, 60 Hz
Full-Load Current Rating	10A
Minimum Circuit Size	15A
Connection Type	Cord & Plug
Power Cord Included	Yes
Power Cord Length	72 in.
Power Cord Gauge	18 AWG
Plug Included	Yes
Included Plug Type	5-15
Switch Type	Paddle Safety Switch w/Removable Key

Motors:

Main

Horsepower	1-1/2 HP
Phase	Single-Phase
Amps	10A
Speed	19,000 RPM
Type	Universal
Power Transfer	Belt
Bearings	Shielded & Permanently Lubricated

Main Specifications:

Main Specifications

Jointer Size	8 in.
Bevel Jointing	0 - 45 deg.
Maximum Width of Cut	8 in.
Maximum Depth of Cut	1/8 in.
Minimum Workpiece Length	10 in.
Minimum Workpiece Thickness	1/2 in.
Number of Cuts Per Minute	66,000

Fence Information

Fence Length	19-3/4 in.
Fence Width	7/8 in.
Fence Height	4-1/4 in.

Cutterhead Information

Cutterhead Type	Spiral
Cutterhead Diameter	2 in.
Number of Cutter Rows	6
Number of Indexable Cutters	16
Cutterhead Speed	11,000 RPM

Cutter Insert Information

Cutter Insert Type	Indexable HSS
Cutter Insert Length	14mm
Cutter Insert Width	14mm
Cutter Insert Thickness	2mm

Table Information

Table Length	34 in.
Table Width	8-1/4 in.
Table Thickness	1 in.
Floor to Table Height	8-5/16 in.
Table Adjustment Type	Knob
Table Movement Type	Swing

Construction

Body Assembly	Pre-Formed Steel
Fence Assembly	Extruded Aluminum
Guard	Stamped Steel
Table	Cast Aluminum
Paint Type/Finish	Enamel

Other Information

Number of Dust Ports	1
Dust Port Size	4 in.

Other Specifications:

Country of Origin	Taiwan
Warranty	1 Year
Approximate Assembly & Setup Time	20 Minutes
Serial Number Location	Machine ID Label
Sound Rating	90 - 92 dB
ISO 9001 Factory	Yes
Certified by a Nationally Recognized Testing Laboratory (NRTL)	Yes

Features:

Spiral Cutterhead with 16 Indexable HSS Inserts
8" Infeed/Outfeed Table Extensions
Cast Aluminum Infeed and Outfeed Tables
Infeed Table Height Adjustment Lock
4" Dust Port

Accessories Included:

Two Safety Push Blocks
Torx T-25 T-Handle Driver
Hex Wrenches 2.5, 4mm
4" to 2-1/2" Dust Port Adaptor

SECTION 1: SAFETY

For Your Own Safety, Read Instruction Manual Before Operating This Machine

The purpose of safety symbols is to attract your attention to possible hazardous conditions. This manual uses a series of symbols and signal words intended to convey the level of importance of the safety messages. The progression of symbols is described below. Remember that safety messages by themselves do not eliminate danger and are not a substitute for proper accident prevention measures. Always use common sense and good judgment.

⚠DANGER **Indicates an imminently hazardous situation which, if not avoided, WILL result in death or serious injury.**

⚠WARNING **Indicates a potentially hazardous situation which, if not avoided, COULD result in death or serious injury.**

⚠CAUTION **Indicates a potentially hazardous situation which, if not avoided, MAY result in minor or moderate injury. It may also be used to alert against unsafe practices.**

NOTICE **Alerts the user to useful information about proper operation of the machine to avoid machine damage.**

Safety Instructions for Machinery

⚠WARNING

OWNER'S MANUAL. Read and understand this owner's manual BEFORE using machine.

TRAINED OPERATORS ONLY. Untrained operators have a higher risk of being hurt or killed. Only allow trained/supervised people to use this machine. When machine is not being used, disconnect power, remove switch keys, or lock-out machine to prevent unauthorized use—especially around children. Make your workshop kid proof!

DANGEROUS ENVIRONMENTS. Do not use machinery in areas that are wet, cluttered, or have poor lighting. Operating machinery in these areas greatly increases the risk of accidents and injury.

MENTAL ALERTNESS REQUIRED. Full mental alertness is required for safe operation of machinery. Never operate under the influence of drugs or alcohol, when tired, or when distracted.

ELECTRICAL EQUIPMENT INJURY RISKS. You can be shocked, burned, or killed by touching live electrical components or improperly grounded machinery. To reduce this risk, only allow qualified service personnel to do electrical installation or repair work, and always disconnect power before accessing or exposing electrical equipment.

DISCONNECT POWER FIRST. Always disconnect machine from power supply BEFORE making adjustments, changing tooling, or servicing machine. This prevents an injury risk from unintended startup or contact with live electrical components.

EYE PROTECTION. Always wear ANSI-approved safety glasses or a face shield when operating or observing machinery to reduce the risk of eye injury or blindness from flying particles. Everyday eyeglasses are NOT approved safety glasses.

⚠WARNING

WEARING PROPER APPAREL. Do not wear loose clothing, gloves, neckties, or jewelry that can become entangled in moving parts. Always tie back or cover long hair. Wear non-slip footwear to reduce risk of slipping and losing control or accidentally contacting cutting tool or moving parts.

HAZARDOUS DUST. Dust created by machinery operations may cause cancer, birth defects, or long-term respiratory damage. Be aware of dust hazards associated with each workpiece material. Always wear a NIOSH-approved respirator to reduce your risk.

HEARING PROTECTION. Always wear hearing protection when operating or observing loud machinery. Extended exposure to this noise without hearing protection can cause permanent hearing loss.

REMOVE ADJUSTING TOOLS. Tools left on machinery can become dangerous projectiles upon startup. Never leave chuck keys, wrenches, or any other tools on machine. Always verify removal before starting!

USE CORRECT TOOL FOR THE JOB. Only use this tool for its intended purpose—do not force it or an attachment to do a job for which it was not designed. Never make unapproved modifications—modifying tool or using it differently than intended may result in malfunction or mechanical failure that can lead to personal injury or death!

AWKWARD POSITIONS. Keep proper footing and balance at all times when operating machine. Do not overreach! Avoid awkward hand positions that make workpiece control difficult or increase the risk of accidental injury.

CHILDREN & BYSTANDERS. Keep children and bystanders at a safe distance from the work area. Stop using machine if they become a distraction.

GUARDS & COVERS. Guards and covers reduce accidental contact with moving parts or flying debris. Make sure they are properly installed, undamaged, and working correctly BEFORE operating machine.

FORCING MACHINERY. Do not force machine. It will do the job safer and better at the rate for which it was designed.

NEVER STAND ON MACHINE. Serious injury may occur if machine is tipped or if the cutting tool is unintentionally contacted.

STABLE MACHINE. Unexpected movement during operation greatly increases risk of injury or loss of control. Before starting, verify machine is stable and mobile base (if used) is locked.

USE RECOMMENDED ACCESSORIES. Consult this owner's manual or the manufacturer for recommended accessories. Using improper accessories will increase the risk of serious injury.

UNATTENDED OPERATION. To reduce the risk of accidental injury, turn machine ***OFF*** and ensure all moving parts completely stop before walking away. Never leave machine running while unattended.

MAINTAIN WITH CARE. Follow all maintenance instructions and lubrication schedules to keep machine in good working condition. A machine that is improperly maintained could malfunction, leading to serious personal injury or death.

DAMAGED PARTS. Regularly inspect machine for damaged, loose, or mis-adjusted parts—or any condition that could affect safe operation. Immediately repair/replace BEFORE operating machine. For your own safety, DO NOT operate machine with damaged parts!

MAINTAIN POWER CORDS. When disconnecting cord-connected machines from power, grab and pull the plug—NOT the cord. Pulling the cord may damage the wires inside. Do not handle cord/plug with wet hands. Avoid cord damage by keeping it away from heated surfaces, high traffic areas, harsh chemicals, and wet/damp locations.

EXPERIENCING DIFFICULTIES. If at any time you experience difficulties performing the intended operation, stop using the machine! Contact our Technical Support at (570) 546-9663.

Additional Safety for Jointers

⚠WARNING

Serious cuts, amputation, entanglement, or death can occur from contact with rotating cutterhead or other moving components! Flying chips from cutting operations can cause eye injuries or blindness. Workpieces or inserts/knives thrown by cutterhead (kickback) can strike nearby operator or bystanders with deadly force. To reduce the risk of serious personal injury from these hazards, operator and bystanders MUST completely heed the hazards and warnings below.

KICKBACK. Occurs when workpiece is ejected from machine at a high rate of speed. Kickback injuries occur from getting struck by workpiece or hands being pulled into cutterhead. To reduce the risk of kickback, only use proper workpieces, safe feeding techniques, and proper machine setup or maintenance.

GUARD REMOVAL. Operating jointer without guards unnecessarily exposes operator to knives/inserts and other hazardous moving parts. Except when rabbeting, never operate jointer or allow it to be connected to power if any guards are removed. Turn jointer ***OFF*** and disconnect power before clearing any shavings or sawdust from around cutterhead. After rabbeting or maintenance is complete, immediately replace all guards and ensure they are properly installed/adjusted before resuming regular operations.

DULL OR DAMAGED KNIVES/INSERTS. Dull or damaged knives/inserts increase risk of kickback and cause poor workpiece finish. Only use sharp, undamaged knives/inserts.

OUTFEED TABLE ALIGNMENT. Setting outfeed table too high can cause workpiece to hit table or get stuck while feeding. Setting outfeed table too low may cause workpiece to rock or shift while feeding. Both of these results will increase risk of kickback. Always keep outfeed table even with knives/inserts at highest point during rotation.

INSPECTING STOCK. Impact injuries or kickback may result from using improper workpieces. Thoroughly inspect and prepare workpiece before cutting. Verify workpiece is free of nails, staples, loose knots or other foreign material. Always joint warped workpieces with cupped side facing down.

MAXIMUM CUTTING DEPTH. To reduce risk of kickback, never cut deeper than ⅛" per pass.

GRAIN DIRECTION. Jointing against the grain or end grain can increase risk of kickback. It also requires more cutting force, which produces chatter or excessive chip out. Always joint or surface plane WITH the grain.

CUTTING LIMITATIONS. Cutting workpieces that do not meet minimum dimension requirements can result in kickback or accidental contact with cutterhead. Never perform jointing, planing, or rabbeting cuts on pieces smaller than specified in machine data sheet.

PUSH BLOCKS. Push blocks reduce risk of accidental cutterhead contact with hands. Always use push blocks when planing materials less than 3" high or wide. Never pass your hands directly over cutterhead without a push block.

WORKPIECE SUPPORT. Poor workpiece support or loss of workpiece control while feeding will increase risk of kickback or accidental contact with cutterhead. Support workpiece with fence continuously during operation. Support long stock with auxiliary tables if necessary.

FEED WORKPIECE PROPERLY. Kickback or accidental cutterhead contact may result if workpiece is fed into cutterhead the wrong way. Allow cutterhead to reach full speed before feeding. Never start jointer with workpiece touching cutterhead. Always feed workpiece from infeed side to outfeed side without stopping until cut is complete. Never move workpiece backwards while feeding.

SECURE KNIVES/INSERTS. Loose knives or improperly set inserts can be thrown from cutterhead with dangerous force. Always verify knives/inserts are secure and properly adjusted before operation. Straight knives should never project more than ⅛" (0.125") from cutterhead body.

SECTION 2: POWER SUPPLY

Availability

Before installing the machine, consider the availability and proximity of the required power supply circuit. If an existing circuit does not meet the requirements for this machine, a new circuit must be installed. To minimize the risk of electrocution, fire, or equipment damage, installation work and electrical wiring must be done by an electrician or qualified service personnel in accordance with all applicable codes and standards.



⚠WARNING

Electrocution, fire, shock, or equipment damage may occur if machine is not properly grounded and connected to power supply.

Full-Load Current Rating

The full-load current rating is the amperage a machine draws at 100% of the rated output power. On machines with multiple motors, this is the amperage drawn by the largest motor or sum of all motors and electrical devices that might operate at one time during normal operations.

Full-Load Current Rating at 120V ..... 10 Amps

The full-load current is not the maximum amount of amps that the machine will draw. If the machine is overloaded, it will draw additional amps beyond the full-load rating.

If the machine is overloaded for a sufficient length of time, damage, overheating, or fire may result—especially if connected to an undersized circuit. To reduce the risk of these hazards, avoid overloading the machine during operation and make sure it is connected to a power supply circuit that meets the specified circuit requirements.

⚠WARNING

Serious injury could occur if you connect machine to power before completing setup process. DO NOT connect to power until instructed later in this manual.

120V Circuit Requirements

This machine is prewired to operate on a power supply circuit that has a verified ground and meets the following requirements:

Nominal Voltage 110V, 115V, 120V
Cycle ..... 60 Hz
Phase ..... Single-Phase
Power Supply Circuit ..... 15 Amps

A power supply circuit includes all electrical equipment between the breaker box or fuse panel in the building and the machine. The power supply circuit used for this machine must be sized to safely handle the full-load current drawn from the machine for an extended period of time. (If this machine is connected to a circuit protected by fuses, use a time delay fuse marked D.)

⚠CAUTION

For your own safety and protection of property, consult an electrician if you are unsure about wiring practices or electrical codes in your area.

Note: *Circuit requirements in this manual apply to a dedicated circuit—where only one machine will be running on the circuit at a time. If machine will be connected to a shared circuit where multiple machines may be running at the same time, consult an electrician or qualified service personnel to ensure circuit is properly sized for safe operation.*

Grounding & Plug Requirements

This machine MUST be grounded. In the event of certain malfunctions or breakdowns, grounding reduces the risk of electric shock by providing a path of least resistance for electric current.

This machine is equipped with a power cord that has an equipment-grounding wire and a grounding plug. Only insert plug into a matching receptacle (outlet) that is properly installed and grounded in accordance with all local codes and ordinances. DO NOT modify the provided plug!

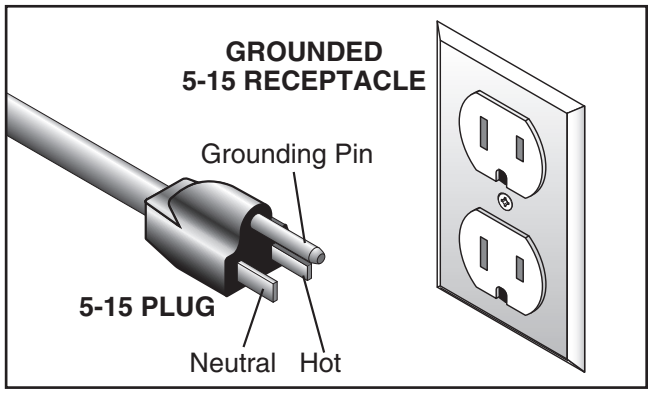

Figure 3. Typical 5-15 plug and receptacle.

⚠CAUTION

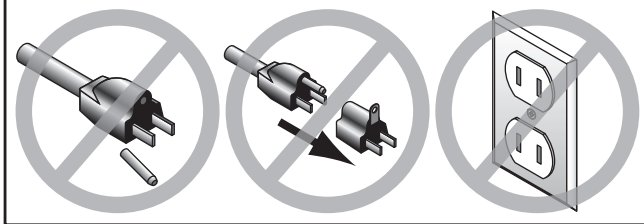

SHOCK HAZARD!

Two-prong outlets do not meet the grounding requirements for this machine. Do not modify or use an adapter on the plug provided—if it will not fit the outlet, have a qualified electrician install the proper outlet with a verified ground.

Improper connection of the equipment-grounding wire can result in a risk of electric shock. The wire with green insulation (with or without yellow stripes) is the equipment-grounding wire. If repair or replacement of the power cord or plug is necessary, do not connect the equipment-grounding wire to a live (current carrying) terminal.

Check with a qualified electrician or service personnel if you do not understand these grounding requirements, or if you are in doubt about whether the tool is properly grounded. If you ever notice that a cord or plug is damaged or worn, disconnect it from power, and immediately replace it with a new one.

Extension Cords

We do not recommend using an extension cord with this machine. If you must use an extension cord, only use it if absolutely necessary and only on a temporary basis.

Extension cords cause voltage drop, which can damage electrical components and shorten motor life. Voltage drop increases as the extension cord size gets longer and the gauge size gets smaller (higher gauge numbers indicate smaller sizes).

Any extension cord used with this machine must be in good condition and contain a ground wire and matching plug/receptacle. Additionally, it must meet the following size requirements:

Minimum Gauge Size.....14 AWG
Maximum Length (Shorter is Better).....50 ft.

SECTION 3: SETUP

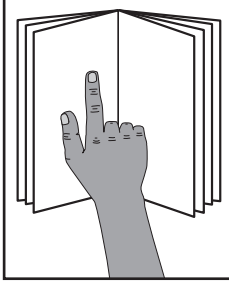

⚠WARNING

This machine presents serious injury hazards to untrained users. Read through this entire manual to become familiar with the controls and operations before starting the machine!



⚠WARNING

Wear safety glasses during the entire setup process!



⚠WARNING

This machine and its components are very heavy. Get lifting help or use power lifting equipment such as a forklift to move heavy items.

⚠WARNING

Like all machinery there is potential danger when operating this machine. Accidents are frequently caused by lack of familiarity or failure to pay attention. Use this machine with respect and caution to decrease the risk of operator injury. If normal safety precautions are overlooked or ignored, serious personal injury may occur.

Needed for Setup

The following items are needed, but not included, for the setup/assembly of this machine.

Description	Qty
• Additional Person for Lifting	1
• Safety Glasses (for each person)	1
• Hex Wrench 5mm	1
• Dust Collection System	1
• 2½" Dust Hose (G0945/G0946)	1
• 2½" Hose Clamp (G0945/G0946)	1
• 4" Dust Hose (G0947)	1
• 4" Hose Clamp (G0947)	1
• Degreaser for Cleaning	As Needed
• Disposable Rags for Cleaning	As Needed

Unpacking

This machine was carefully packaged for safe transport. When unpacking, separate all enclosed items from packaging materials and inspect them for shipping damage. ***If items are damaged, please call us immediately at (570) 546-9663.***

IMPORTANT: Save all packaging materials until you are completely satisfied with the machine and have resolved any issues between Grizzly or the shipping agent. *You MUST have the original packaging to file a freight claim. It is also extremely helpful if you need to return your machine later.*

⚠CAUTION

No list of safety guidelines can be complete. Every shop environment is different. Always consider safety first, as it applies to your individual working conditions. Use this and other machinery with caution and respect. Failure to do so could result in serious personal injury, damage to equipment, or poor work results.

Inventory

The following is a list of items shipped with your machine. Before beginning setup, lay these items out and inventory them.

If any non-proprietary parts are missing (e.g. a nut or a washer), we will gladly replace them; or for the sake of expediency, replacements can be obtained at your local hardware store.

NOTICE

If you cannot find an item on this list, carefully check around/inside the machine and packaging materials. Often, these items get lost in packaging materials while unpacking or they are pre-installed at the factory.

Box Inventory (Figure 4)	Qty
A. Jointer w/Cutterhead Guard	1
B. Fence	1
C. Fence Slide Bracket	1
D. Dust Port	1
E. Fence Support Bracket	1
F. Dust Port Adaptor 2½" (G0947)	1

Hardware and Tools (Figure 5)	Qty
G. Fender Washer 8mm	1
H. Button Head Cap Screws M6-1 x 16	2
I. T-Slot Nuts 7, M6-1	2
J. Square Nut M8-1.25	1
K. Fence Slide Lock Handle	1
L. Hex Wrenches 2.5, 4mm	1 Ea.
M. T-Handle Torx Wrench T-25	1
N. Push Blocks	2
O. Cutterhead Lock (G0945)	1

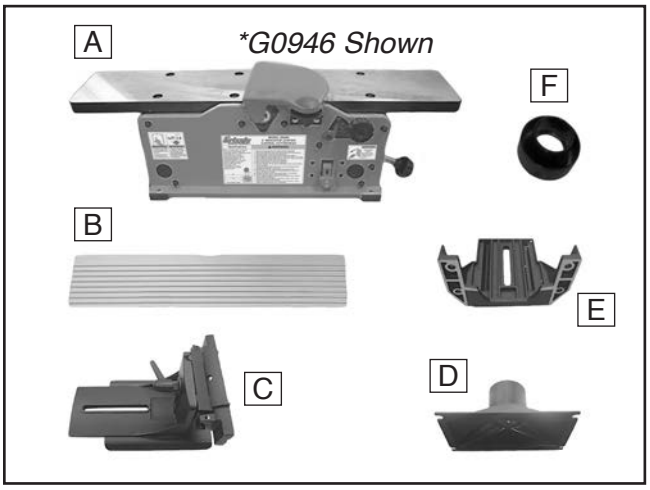

Figure 4. Box inventory.

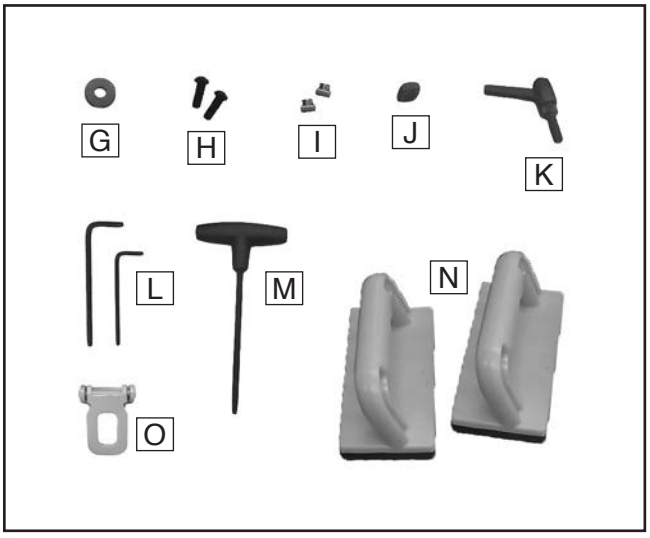

Figure 5. Hardware and tools inventory.

Cleanup

The unpainted surfaces of your machine are coated with a heavy-duty rust preventative that prevents corrosion during shipment and storage. This rust preventative works extremely well, but it will take a little time to clean.

Be patient and do a thorough job cleaning your machine. The time you spend doing this now will give you a better appreciation for the proper care of your machine's unpainted surfaces.

There are many ways to remove this rust preventative, but the following steps work well in a wide variety of situations. Always follow the manufacturer's instructions with any cleaning product you use and make sure you work in a well-ventilated area to minimize exposure to toxic fumes.

Before cleaning, gather the following:
- Disposable rags
- Cleaner/degreaser (WD•40 works well)
- Safety glasses & disposable gloves
- Plastic paint scraper (optional)

Basic steps for removing rust preventative:

1. Put on safety glasses.

2. Coat the rust preventative with a liberal amount of cleaner/degreaser, then let it soak for 5–10 minutes.

3. Wipe off the surfaces. If your cleaner/degreaser is effective, the rust preventative will wipe off easily. If you have a plastic paint scraper, scrape off as much as you can first, then wipe off the rest with the rag.

4. Repeat **Steps 2–3** as necessary until clean, then coat all unpainted surfaces with a quality metal protectant to prevent rust.

NOTICE

Avoid harsh solvents like acetone or brake parts cleaner that may damage painted surfaces. Always test on a small, inconspicuous location first.

Site Considerations

Workbench Load

Refer to the **Machine Data Sheet** for the weight and footprint specifications of your machine. Some workbenches may require additional reinforcement to support the weight of the machine and workpiece materials.

Placement Location

Consider anticipated workpiece sizes and additional space needed for auxiliary stands, work tables, or other machinery when establishing a location for this machine in the shop. Below is the minimum amount of space needed for the machine.

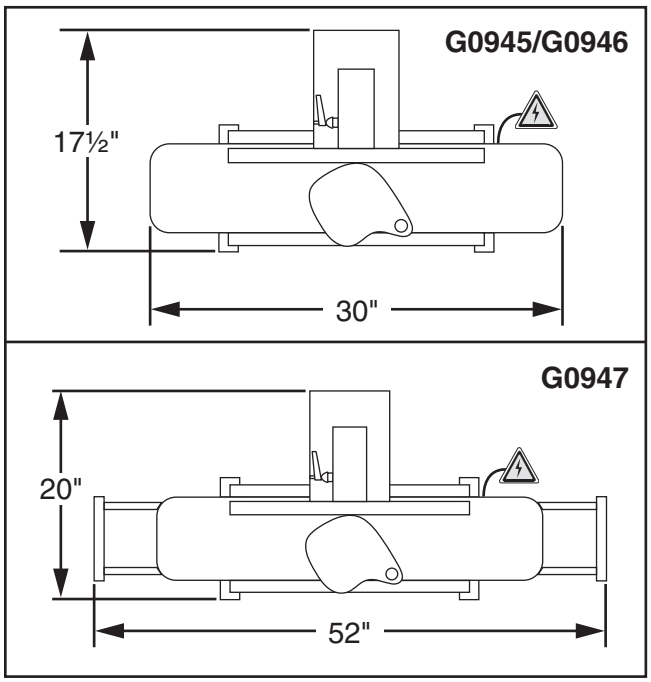

Figure 6. Minimum working clearances.

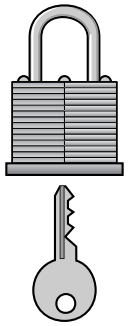

⚠CAUTION

Children and visitors may be seriously injured if unsupervised around this machine. Lock entrances to the shop or disable start switch or power connection to prevent unsupervised use.

Bench Mounting

Number of Mounting Holes 4
Diameter of Mounting Hardware Needed....¼"

The base of this machine has mounting holes that allow it to be fastened to a workbench or other mounting surface to prevent it from moving during operation and causing accidental injury or damage.

The strongest mounting option is a "Through Mount" (see example below) where holes are drilled all the way through the workbench—and hex bolts, washers, and hex nuts are used to secure the machine in place.

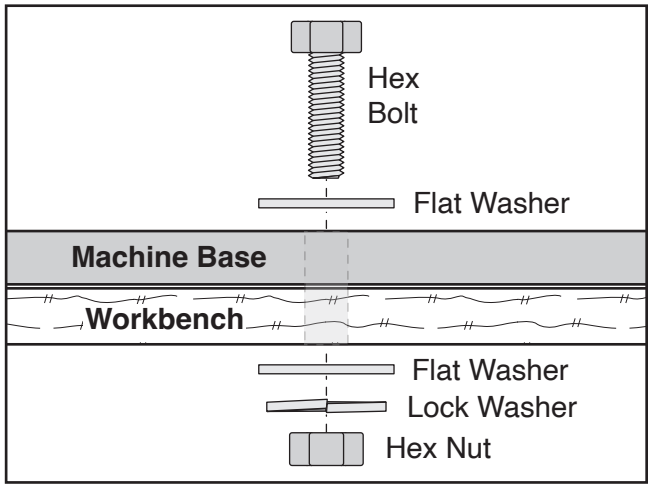

Figure 7. "Through Mount" setup.

Another option is a "direct mount" (see example below) where the machine is secured directly to the workbench with lag screws and washers.

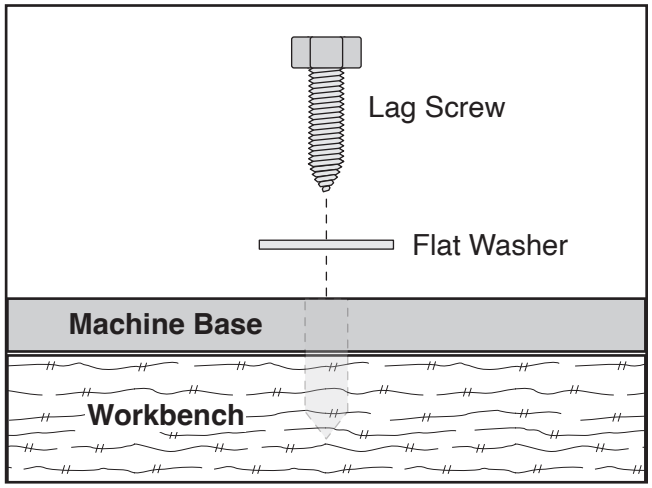

Figure 8. "Direct Mount" setup.

Assembly

The machine must be fully assembled before it can be operated. Before beginning the assembly process, refer to **Needed for Setup** and gather all listed items. To ensure the assembly process goes smoothly, first clean any parts that are covered or coated in heavy-duty rust preventative (if applicable).

To assemble jointer:

1. Remove (4) button head cap screws from jointer base and use to install fence support bracket (see **Figure 9**).

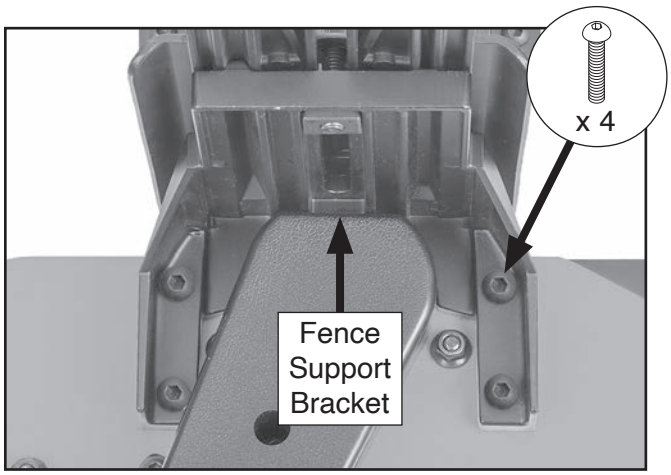

Figure 9. Button head cap screws used to install fence support bracket.

2. Install (2) M6-1 x 16 button head cap screws and (2) M6-1 T-slot nuts on fence slide bracket (see **Figure 10**). DO NOT tighten at this time.

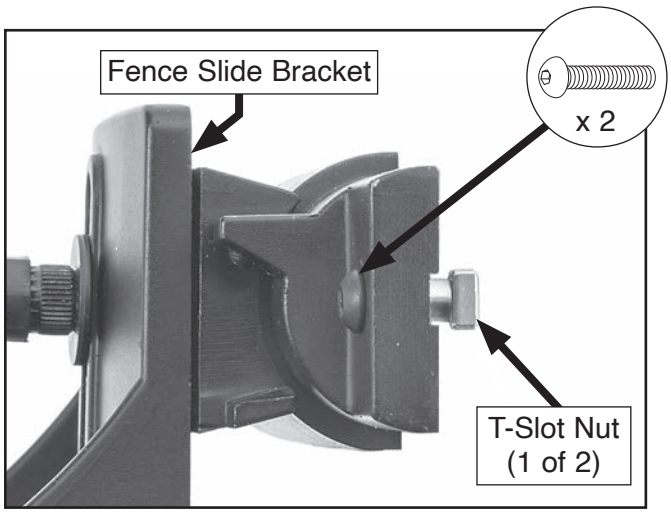

Figure 10. Button head cap screws and T-slot nuts installed.

3. Install fence on fence slide bracket by inserting (2) M6-1 T-slot nuts installed in **Step 2** into T-slot on rear side of fence (see **Figure 11**).

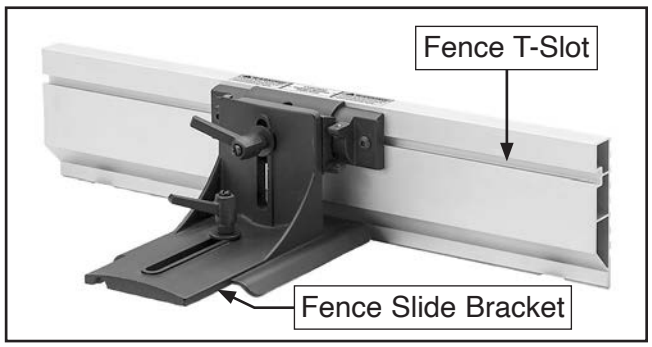

Figure 11. T-slot on rear side of fence.

4. Align fence cutout with center of fence slide bracket, and tighten (2) button head cap screws (see **Figure 12**) installed in **Step 2**.

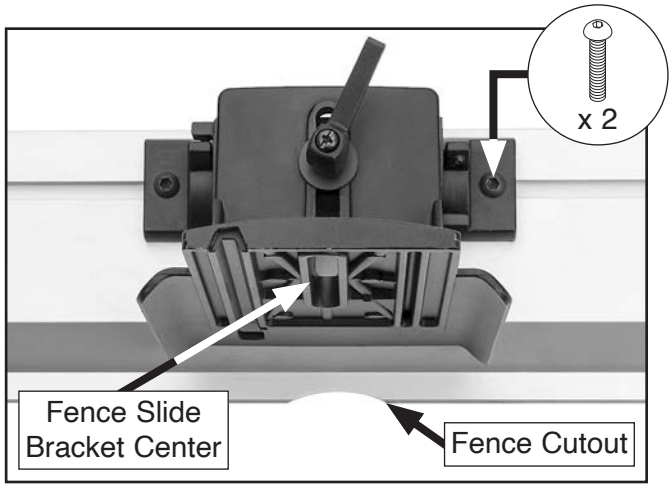

Figure 12. Fence cutout and slide bracket.

5. Place fence slide bracket on fence support bracket and insert fence slide lock handle and fender washer through center of brackets (see **Figure 13**).

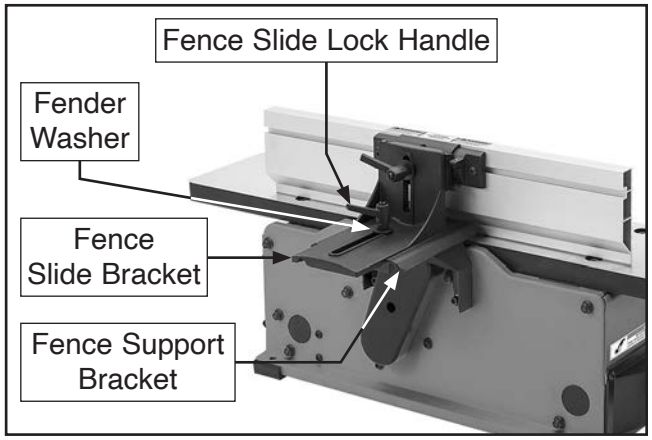

Figure 13. Fence support bracket components.

6. Install M8-1.25 square nut on fence slide lock handle and tighten handle to lock in place (see **Figure 14**).

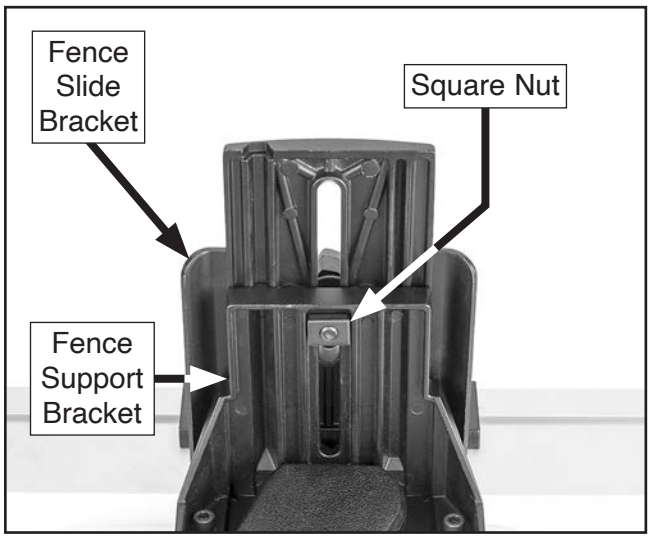

Figure 14. Square nut installed on fence slide lock handle.

7. **G0945 Only:** Remove (1) M6-1 x 12 button head cap screw from bottom of cutterhead front bearing retainer (see **Figure 15A**). Insert screw through mounting hole on cutterhead lock, then re-install screw and secure (see **Figure 15B**).

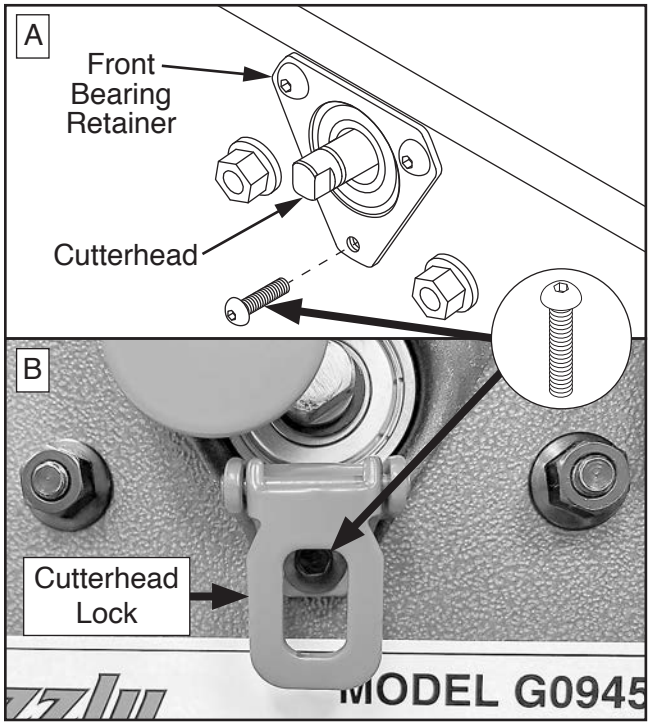

Figure 15. Installing cutterhead lock on Model G0945.

Dust Collection

⚠CAUTION

This machine creates a lot of wood chips/dust during operation. Breathing airborne dust on a regular basis can result in permanent respiratory illness. Reduce your risk by wearing a respirator and capturing the dust with a dust-collection system.

Minimum CFM at Dust Port: 150 CFM
Do not confuse this CFM recommendation with the rating of the dust collector. To determine the CFM at the dust port, you must consider these variables: (1) CFM rating of the dust collector, (2) hose type and length between the dust collector and the machine, (3) number of branches or wyes, and (4) amount of other open lines throughout the system. Explaining how to calculate these variables is beyond the scope of this manual. Consult an expert or purchase a good dust collection "how-to" book.

Installing Dust Port

1. Remove (4) button head cap screws from dust chute on left side of jointer base.

2. Place dust port over dust chute and install (4) button head cap screws removed in **Step 1** to secure dust port in place (see **Figure 16**).

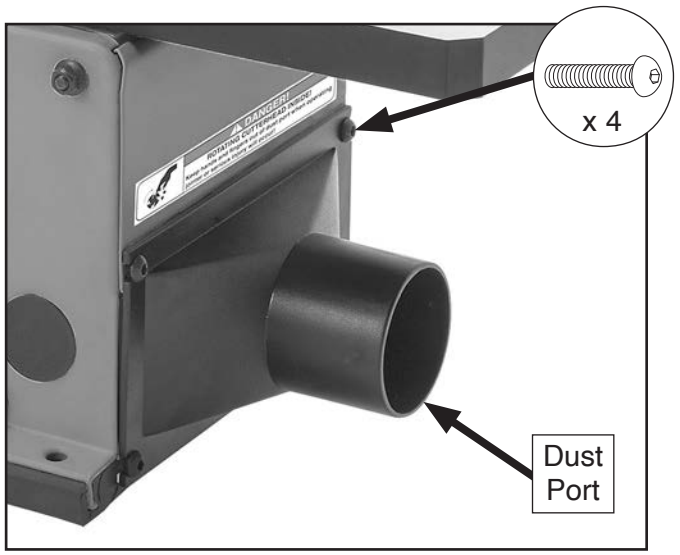

Figure 16. Dust port installed on jointer.

NOTICE

To help prevent material build-up from obstructing dust chute and negatively impacting cutterhead operation, always remove dust port if operating machine without a dust collection system.

Connecting Dust Collection Hose

1. **G0945/G0946:** Fit a 2½" dust hose over the dust port, as shown in **Figure 17**, and secure in place with a hose clamp.

2. **G0947:** Fit a 4" dust hose over the dust port, as shown in **Figure 17**, and secure in place with a hose clamp.

   — If connecting to a 2½" dust collection hose, install the 2½" dust port adaptor included with the Model G0947.

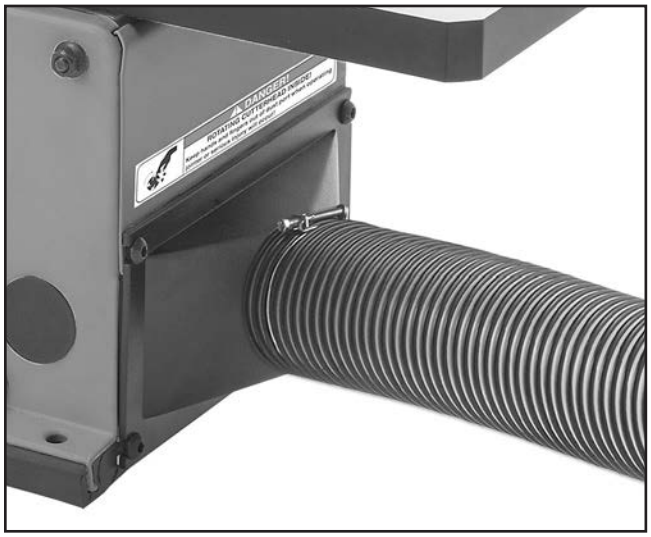

Figure 17. Dust hose attached to dust port.

3. Tug the hose to make sure it does not come off.

   Note: *A tight fit is necessary for proper dust collection performance.*

Test Run

Once assembly is complete, test run the machine to ensure it is properly connected to power and safety components are functioning correctly.

If you find an unusual problem during the test run, immediately stop the machine, disconnect it from power, and fix the problem BEFORE operating the machine again. The **Troubleshooting** table in the **SERVICE** section of this manual can help.

The Test Run consists of verifying the following: 1) The motor powers up and runs correctly, and 2) the switch disabling key disables the switch properly.

⚠WARNING

Serious injury or death can result from using this machine BEFORE understanding its controls and related safety information. DO NOT operate, or allow others to operate, machine until the information is understood.

⚠WARNING

DO NOT start machine until all preceding setup instructions have been performed. Operating an improperly set up machine may result in malfunction or unexpected results that can lead to serious injury, death, or machine/property damage.

To test run machine:

1. Clear all setup tools away from machine.
2. **G0945 Only:** Disengage cutterhead lock.
3. Connect machine to power supply.
4. Turn machine ***ON***, verify motor operation, and then turn machine ***OFF***.

   The motor should run smoothly and without unusual problems or noises.
5. Remove switch disabling key, as shown in **Figure 18**.

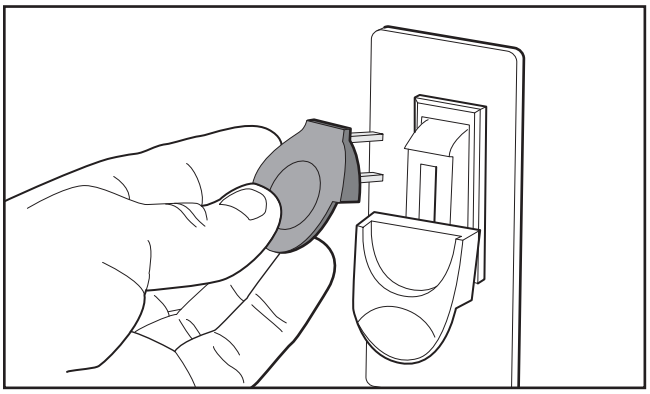

Figure 18. Removing switch key from ON/OFF paddle switch.

6. Try to start machine with paddle switch. The machine should not start.

   — If the machine *does not* start, the switch disabling feature is working correctly. Congratulations! Test Run is complete.

   — If the machine *does start*, immediately stop the machine. The switch disabling feature is not working correctly. This safety feature must work properly before proceeding with regular operations. Call Tech Support for help.
7. After approximately 16 hours of operation, adjust drive belt tension as instructed in **Replacing/Tensioning Belt** on **Page 45**.

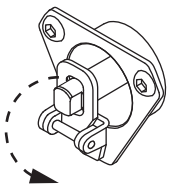

NOTICE

G0945 Only: Disengage cutterhead lock on front of jointer before operating or damage to machine may occur!

NOTICE

During the first 16 hours, the belt will stretch and seat into the pulley groove. After this time, you must re-tension the belt to avoid slippage and burn out.

SECTION 4: OPERATIONS

Operation Overview

The purpose of this overview is to provide the novice machine operator with a basic understanding of how the machine is used during operation, so the machine controls/components discussed later in this manual are easier to understand.

Due to the generic nature of this overview, it is **not** intended to be an instructional guide. To learn more about specific operations, read this entire manual, seek additional training from experienced machine operators, and do additional research outside of this manual by reading "how-to" books, trade magazines, or websites.

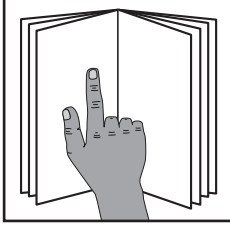

⚠WARNING

To reduce your risk of serious injury, read this entire manual BEFORE using machine.

⚠WARNING

To reduce risk of eye injury from flying chips or lung damage from breathing dust, always wear safety glasses and a respirator when operating this machine.



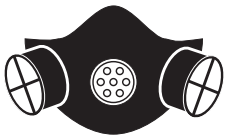

NOTICE

If you are not experienced with this type of machine, WE STRONGLY RECOMMEND that you seek additional training outside of this manual. Read books/magazines or get formal training before beginning any projects. Regardless of the content in this section, Grizzly Industrial will not be held liable for accidents caused by lack of training.

To complete a typical operation, the operator does the following:

1. Examines workpiece to verify it is safe and suitable for jointing.
2. Adjusts fence for width of workpiece and locks it in place.
3. Adjusts fence tilt, if necessary.
4. Adjusts infeed table height to set depth of cut per pass.
5. Ensures cutterhead guard position and operation are functioning properly.
6. Puts on safety glasses, respirator, and any other required protective equipment.
7. Starts jointer.
8. Using push blocks as needed, holds workpiece firmly against infeed table and fence, and feeds workpiece into cutterhead at a steady and controlled rate until entire length of workpiece has been cut and it clears the cutterhead on the outfeed table side.
9. Repeats cutting process described above until desired results are achieved.
10. Stops jointer.

Stock Inspection

Follow these rules when choosing and jointing stock:

- **DO NOT joint or surface plane stock that contains large or loose knots.** Injury to the operator or damage to the workpiece can occur if a knot becomes dislodged during the cutting operation.

- **DO NOT joint or surface plane against the grain direction.** Cutting against the grain increases the likelihood of kickback, as well as tear-out on the workpiece.

- **Jointing and surface planing with the grain produces a better finish and is safer for the operator.** Cutting with the grain is described as feeding the stock on the jointer so the grain points down and toward you as viewed on the edge of the stock (see **Figure** below).

  Note: *If the grain changes direction along the edge of the board, decrease the cutting depth and make additional passes.*

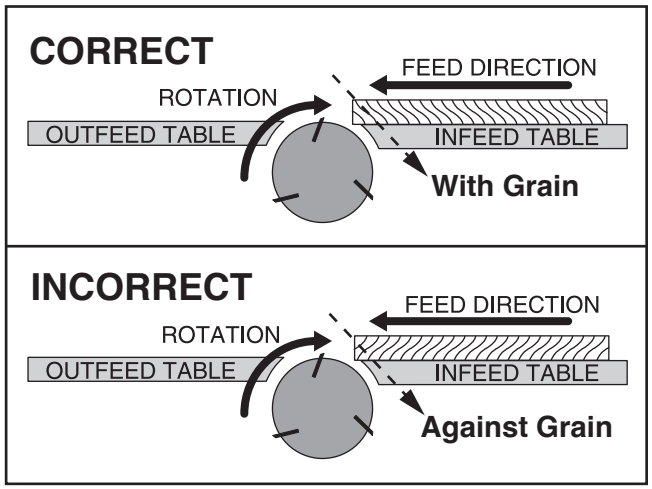

Figure 19. Proper grain alignment with cutterhead.

- **Only cut natural wood.** This jointer is only designed for cutting natural wood stock. Never use it to cut MDF, particle board, plywood, laminates, drywall, backer board, metals, glass, stone, tile, products with lead-based paint, or products that contain asbestos. Cutting these may lead to injury or machine damage.

- **Scrape all glue off the workpiece before jointing.** Glue deposits on the workpiece, hard or soft, will gum up the cutterhead and produce poor results.

- **Remove foreign objects from the workpiece.** Make sure that any stock you process with the jointer is clean and free of dirt, nails, staples, tiny rocks or any other foreign objects that could damage the cutterhead. These particles could also cause a spark as they strike the cutterhead and create a fire hazard.

  IMPORTANT: Wood stacked on a concrete or dirt surface can have small pieces of concrete or stone pressed into the surface.

- **Make sure all stock is sufficiently dried before jointing.** Wood with a moisture content over 20% will cause unnecessary wear on the cutters and poor cutting results. Excess moisture can also hasten rust and corrosion.

⚠WARNING

Make sure your workpiece exceeds the minimum dimension requirements shown below before processing it through the jointer, or the workpiece may break or kick back during the operation.

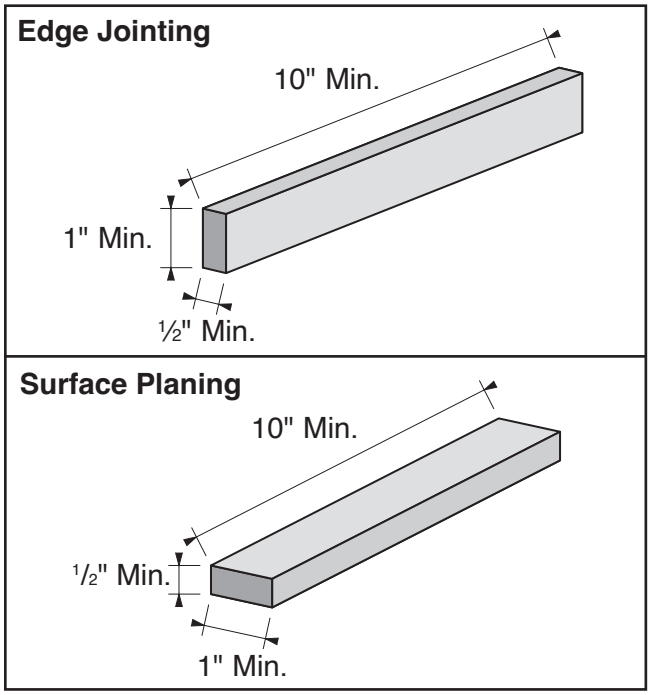

Figure 20. Minimum stock dimensions for jointer.

Setting Depth of Cut

The depth of cut on a jointer affects the amount of material removed from the bottom of the workpiece as it passes over the cutterhead.

Depth of cut is set by adjusting the height of the infeed table relative to the outfeed table, and cutterhead knives/inserts at top dead center (TDC).

⚠WARNING

DO NOT exceed ⅛" depth of cut per pass on this machine or kickback and serious injury may occur!

Items Needed	Qty
Straightedge 12"	1
Hex Wrench 4mm	1

Adjusting Infeed Table Height

To adjust infeed table height, loosen table height lock knob, rotate infeed table adjustment knob counterclockwise to raise table, or clockwise to lower table, and then tighten table height lock knob to secure setting (see).

Depth-of-Cut Scale

Depth of cut can be referenced directly from the scale located on the front of the jointer (see **Figure 21**).

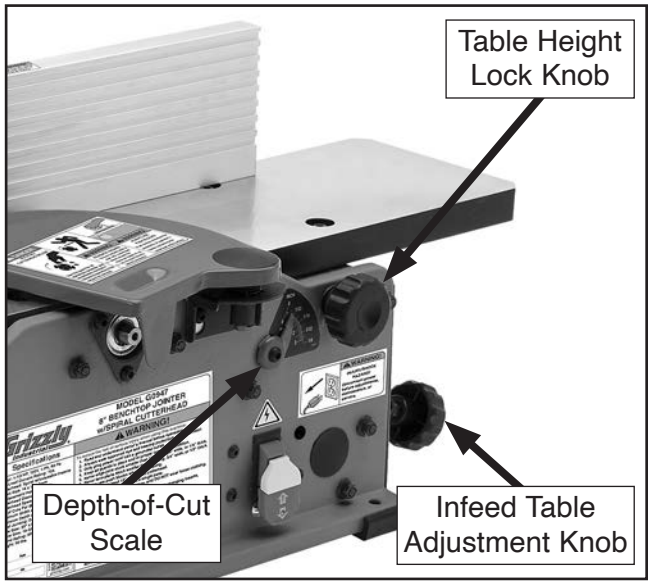

Figure 21. Location of depth-of-cut controls.

Calibrating Depth-of-Cut Scale

The depth-of-cut scale on the infeed table can be calibrated or "zeroed" if it is not correct.

1. Move cutterhead guard out of the way.

2. Place a straightedge across infeed and outfeed tables.

3. Adjust infeed table until it is level with outfeed table (see **Figure 22**).

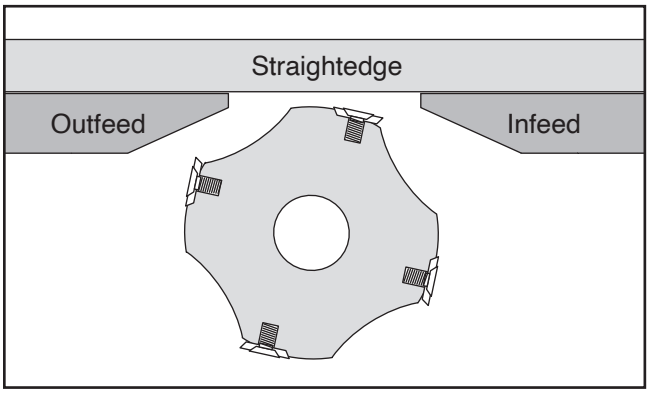

Figure 22. Infeed table level with outfeed table.

4. Loosen button head cap screw on depth-of-cut scale pointer (see **Figure 23**), rotate pointer until it is aligned with "**0**" on scale, and tighten screw.

   Note: *Hold pointer when tightening screw so pointer does not accidentally rotate.*

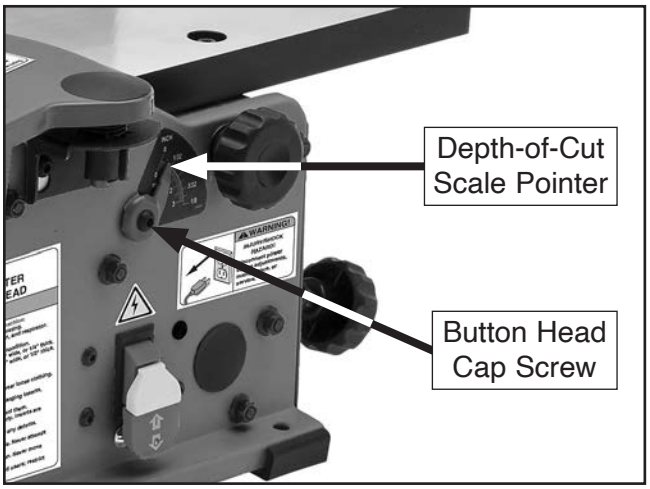

Figure 23. Location of depth-of-cut components.

Squaring Stock

Squaring stock means making it flat and parallel along both length and width, and making the length and width perpendicular to one another.

The purpose of squaring stock is to prepare it for accurate cuts and construction later on.

A properly "squared up" workpiece is essential for tasks such as accurate table saw cuts, glue-ups/laminations, cutting accurate bevels on a bandsaw, and many other applications where one surface of a workpiece is used to reference another.

Items Needed	**Qty**
Jointer	1
Planer	1
Table Saw	1

Squaring stock involves four steps performed in the order below:

1. Surface Plane on the Jointer—The concave face of the workpiece is surface planed flat with the jointer.

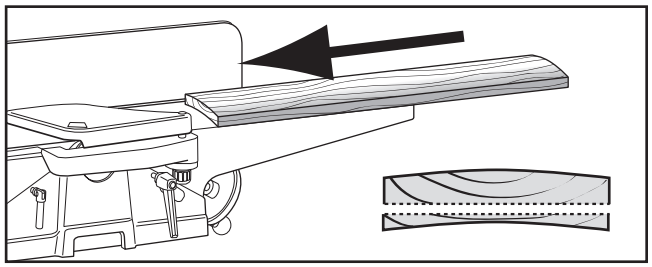

2. Surface Plane on a Thickness Planer—The opposite face of the workpiece is surface planed flat with a thickness planer.

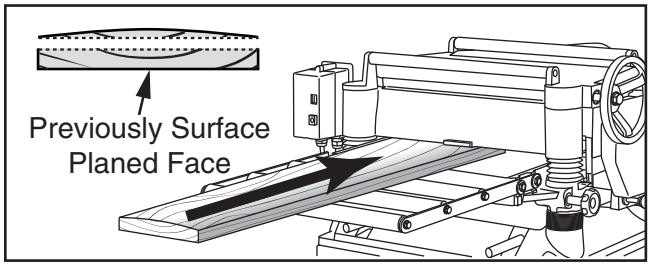

3. Edge Joint on the Jointer—The concave edge of the workpiece is jointed flat with the jointer.

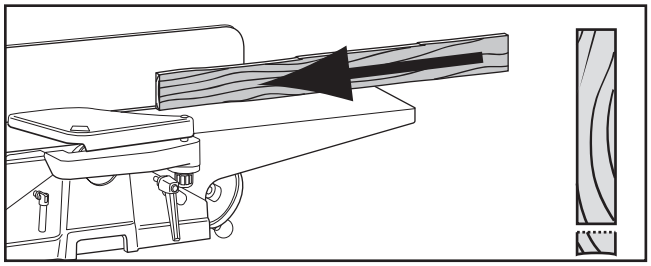

4. Rip Cut on a Table Saw—The jointed edge of the workpiece is placed against a table saw fence and the opposite edge cut off.

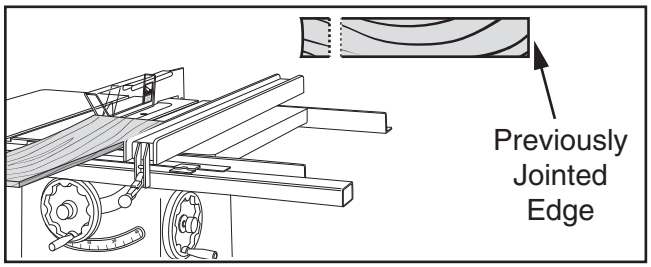

Surface Planing

The purpose of surface planing (see example **Figures** below) on the jointer is to make one flat face on a piece of stock to prepare it for thickness planing on a planer.

⚠WARNING

Failure to use push blocks when surface planing could result in your hands contacting rotating cutterhead, which will cause serious personal injury. ALWAYS use push blocks when surface planing on jointer!

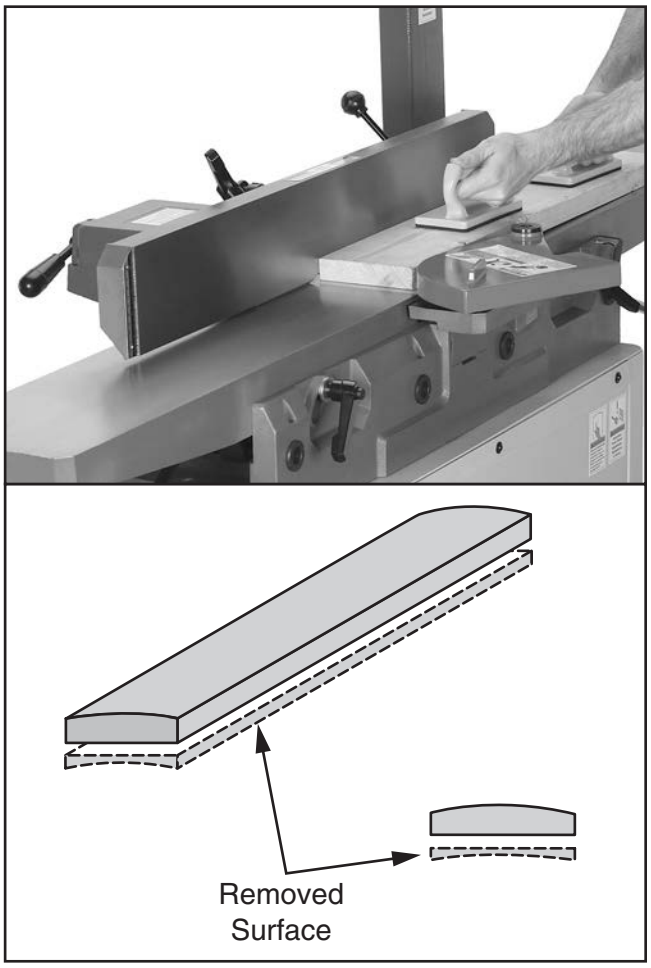

Figure 24. Example of a surface planing operation.

To surface plane on jointer:

1. Inspect stock to ensure it is safe and suitable for the operation (see **Stock Inspection & Requirements** section).

2. Set infeed table height to desired cutting depth for each pass.

   ⚠ **CAUTION:** To minimize risk of kickback, do not exceed a cutting depth of 1/16" per pass when surface planing.

3. Set fence to 90°.

4. Start jointer.

5. Place workpiece firmly against fence and infeed table.

   ⚠ **CAUTION:** To ensure workpiece remains stable during cut, concave sides of workpiece must face toward table and fence.

6. Feed workpiece completely across cutterhead while keeping it firmly against fence and tables during the entire cut.

   ⚠ **CAUTION:** Keep hands at least 4" away from cutterhead during the entire cut. Instead of allowing a hand to pass directly over cutterhead, lift it up and over cutterhead, and safely reposition it on the outfeed side to continue supporting workpiece. Use push blocks whenever practical to further reduce risk of accidental hand contact with cutterhead.

7. Repeat **Step 6** until entire surface is flat.

   Tip: *When squaring up stock, cut opposite side of workpiece with a planer instead of the jointer to ensure both sides are parallel.*

Edge Jointing

Edge jointing (see example **Figures** below) produces a flat and true surface along the side of a workpiece by removing uneven areas. It is an essential step for squaring up warped or rough stock and when preparing a workpiece for joinery or finishing.

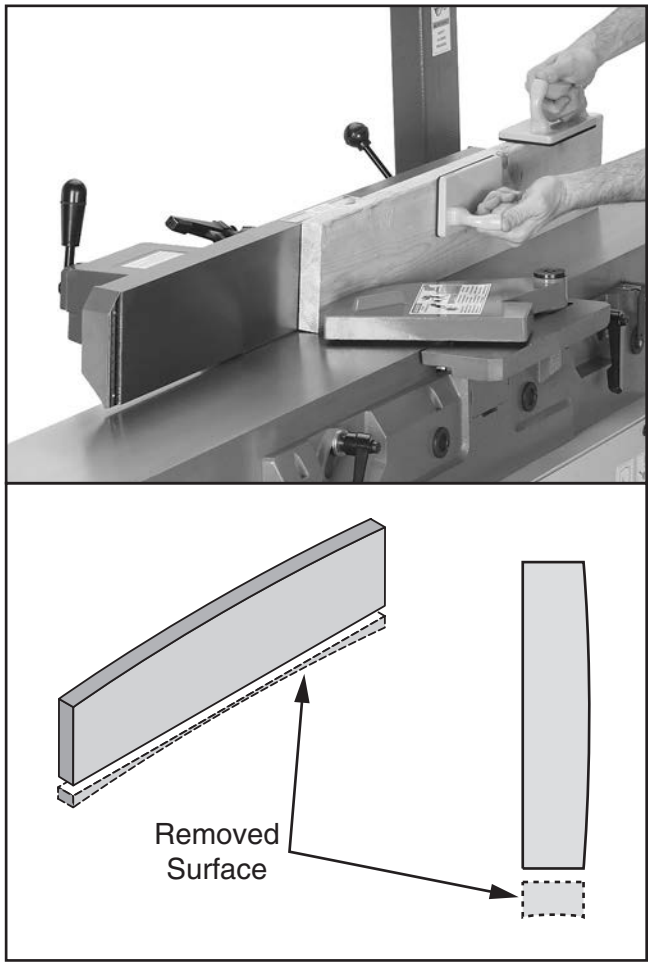

Figure 25. Example of an edge jointing operation.

To edge joint on jointer:

1. Inspect stock to ensure it is safe and suitable for the operation (see **Stock Inspection & Requirements** section).

2. Surface plane workpiece (see **Surface Planing** section).

3. Set infeed table height to desired cutting depth for each pass.

   ⚠ **CAUTION:** To minimize risk of kickback, do not exceed a cutting depth of ⅛" per pass.

4. Set fence to 90°.

5. Start jointer.

6. Place workpiece firmly against fence and infeed table with concave side facing down.

   ⚠ **CAUTION:** To ensure workpiece remains stable during cut, concave sides of workpiece must face toward table and fence.

7. Feed workpiece completely across cutterhead while keeping it firmly against fence and tables during the entire cut.

   ⚠ **CAUTION:** Keep hands at least 4" away from cutterhead during the entire cut. Instead of allowing a hand to pass directly over cutterhead, lift it up and over cutterhead, and safely reposition it on the outfeed side to continue supporting workpiece. Use push blocks whenever practical to further reduce risk of accidental hand contact with cutterhead.

8. Repeat **Step 6** until the entire edge is flat.

   Tip: *When squaring up stock, cut opposite edge of workpiece with a table saw instead of the jointer—otherwise, both edges of workpiece will not be parallel with each other.*

Bevel Cutting

Bevel cuts (see example **Figures** below) can be made by setting the fence at the desired angle and feeding the workpiece firmly along the fence face, with the bottom inside corner firmly against the table. The cutting process typically requires multiple passes or cuts to bevel the entire edge of a workpiece.

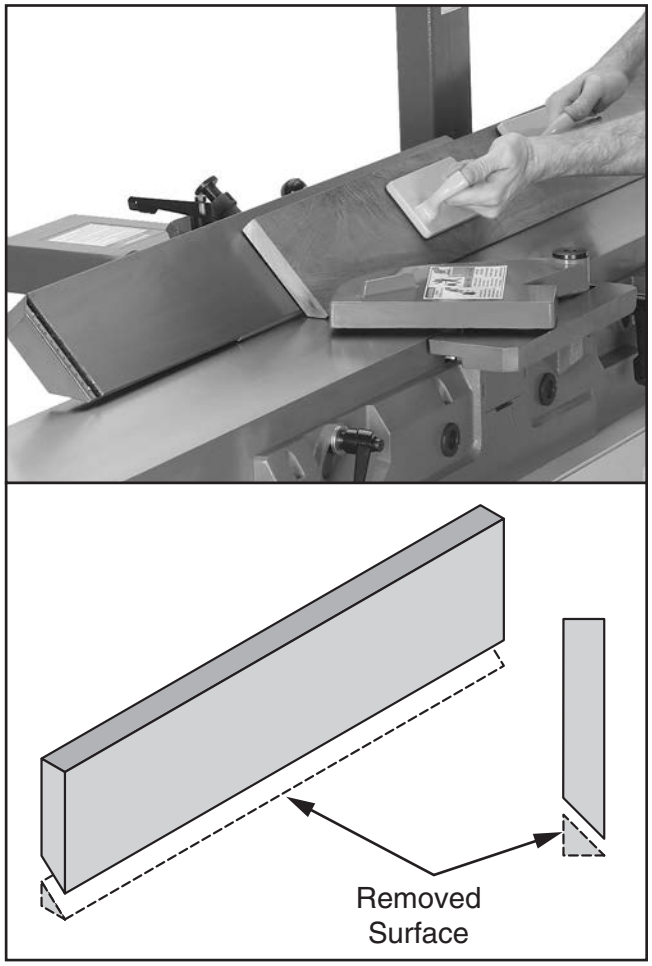

Figure 26. Example of fence set up for a bevel cut of 45°.

To bevel cut on jointer:

1. Inspect stock to ensure it is safe and suitable for the operation (see **Stock Inspection & Requirements** section).

2. Surface plane workpiece (see **Surface Planing** section).

3. Edge joint workpiece (see **Edge Jointing** section).

4. Set infeed table height to cutting depth desired for each pass.

   ⚠ **CAUTION:** Cutting depth for bevel cuts is typically between 1/16" and 1/8", depending on hardness and width of stock.

5. Set fence tilt to desired angle of cut.

6. Place workpiece against fence and infeed table with concave side face down.

7. Start jointer.

8. With a push block in your leading hand, press workpiece against table and fence with firm pressure, and feed workpiece over cutterhead with a push block in your trailing hand.

   ⚠ **CAUTION:** When your leading hand gets within 4" of the cutterhead, lift it up and over cutterhead, and place push block on portion of the workpiece once it is 4" past cutterhead. Now, focus your pressure on outfeed end of the workpiece while feeding, and repeat same action with your trailing hand when it gets within 4" of cutterhead. To help keep your hands safe, DO NOT let them get closer than 4" from moving cutterhead at any time during operation!

9. Repeat cutting process, as necessary, until you are satisfied with the results.

SECTION 5: ACCESSORIES

⚠WARNING

Installing unapproved accessories may cause machine to malfunction, resulting in serious personal injury or machine damage. To reduce this risk, only install accessories recommended for this machine by Grizzly.

NOTICE

Refer to our website or latest catalog for additional recommended accessories.

T33173—T-Slot Height Adjustable Workbench
This workbench is a combination of the T32012 T-Slot Workshop Table Top and the T31850 Electronic Adjustable Workbench Frame. The table top measures 47¼" x 31½" and features five ⅜" T-slot tracks for attaching hold-downs, stops, and an array of jigs.



Figure 27. T33173 T-Slot Height Adjustable Workbench.

T32739—Indexable Carbide Inserts (10 Pack)
Replacement inserts for the G0946/G0947 jointers. These indexable carbide inserts measure 14mm x 14mm x 2mm.

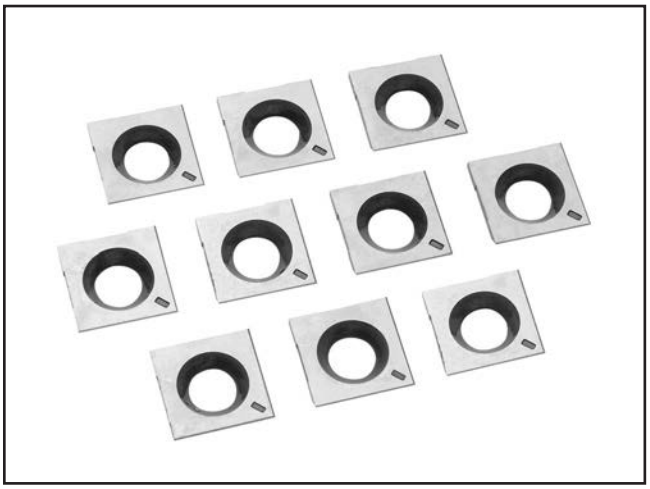

Figure 28. T32739 Indexable Carbide Inserts.

T32900—SK5 Jointer Knives (2 Pack)
Replacement knives for the G0945 jointer. These SK5 jointer knives measure 6¼" x ⅞" x 1/16".

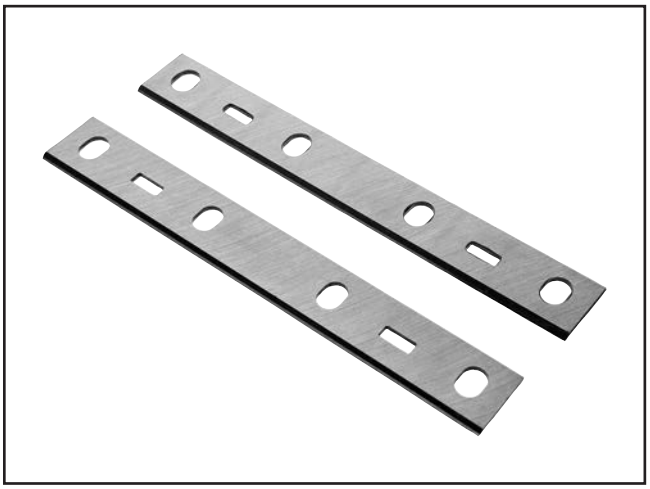

Figure 29. T32900 SK5 Jointer Knives.

W1041—3" x 2½" Dust Port Adaptor
W1044—4" x 2½" Dust Port Adaptor
These adaptors will allow you to connect the 2½" dust port on the G0945/G0946 jointers to a dust collection system with standard 3" or 4" fittings.



Figure 30. Assorted dust collection adaptors.

G5562—SLIPIT® 1 Qt. Gel
G5563—SLIPIT® 11 Oz. Spray



Figure 31. Recommended products for protecting unpainted cast iron/steel part on machinery.

G1163P—1 HP Light Duty Dust Collector
G0710—1 HP Wall-Mount Dust Collector
G3591—30 Micron Replacement Bag
Excellent point-of-use dust collectors that can be used next to the machine with only a small amount of ducting. Specifications: 537 CFM, 7.2" static pressure, 1.5 cubic foot bag, and 30 micron filter. Motor is 1 HP, 120V/240V, 7A/3.5A.

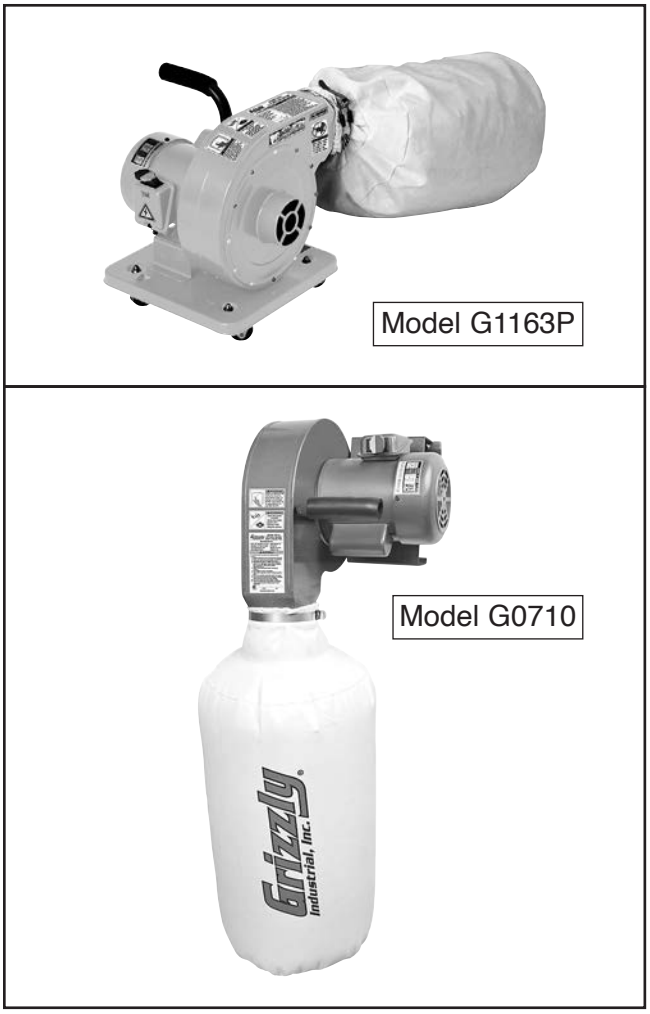

Figure 32. Point-of-use dust collectors.

SECTION 6: MAINTENANCE

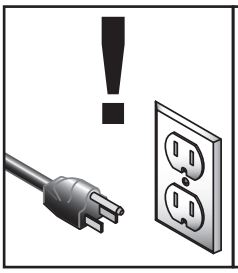

⚠WARNING

To reduce risk of shock or accidental startup, always disconnect machine from power before adjustments, maintenance, or service.

Schedule

For optimum performance from this machine, this maintenance schedule must be strictly followed.

Ongoing

To minimize your risk of injury and maintain proper machine operation, shut down the machine immediately if you ever observe any of the items below, and fix the problem before continuing operations:

- Loose mounting bolts.
- Damaged cutterhead knives/inserts.
- Worn or damaged wires.
- Any other unsafe condition.

Monthly Check

- Fence positive stop accuracy.
- Belt tension, damage, or wear.
- Clean/vacuum dust buildup from inside base and off motor.

Cleaning & Protecting

Cleaning the jointer is relatively easy. Vacuum excess wood chips and sawdust, and wipe off the remaining dust with a dry cloth. If any resin has built up, use a resin dissolving cleaner to remove it.

Protect the unpainted cast aluminum table by wiping it clean after every use—this ensures moisture from wood dust does not remain on bare metal surfaces. Keep your table rust-free with regular applications of quality lubricants. Wax and buff table surface to help prevent improper feeding of workpiece.

Lubrication

Since all bearings are sealed and permanently lubricated, simply leave them alone until they need to be replaced. DO NOT lubricate them.

It is essential to clean components before lubricating them because dust and chips build up on lubricated components and make them hard to move. Simply adding more grease to them will not yield smooth-moving components.

Items Needed	Qty
Pump-Type Oil Can	1
Light Machine Oil	As Needed
Mineral Spirits	As Needed
Clean Shop Rags	As Needed

Fence Slide Bracket

Oil Type	Light Machine Oil
Oil Amount	1–2 Drops
Lubrication Frequency	Monthly, or As Needed

Clean fence slide bracket pivot points and guide ways (see **Figure 33**) with mineral spirits and shop rags, allow to dry, then lubricate with light machine oil.

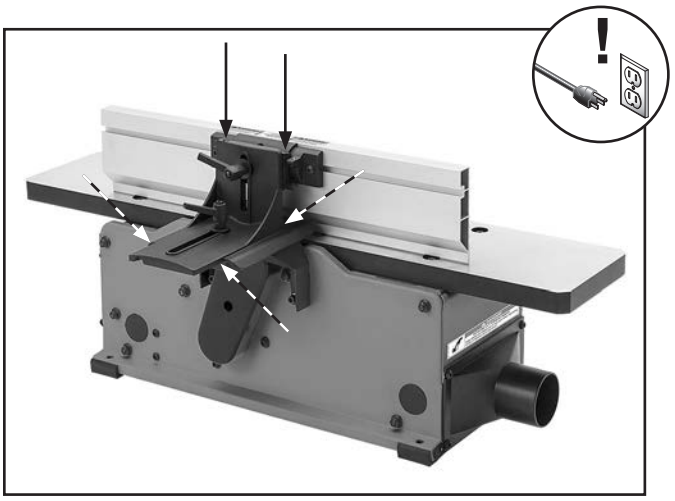

Figure 33. Fence slide bracket lubrication locations.

Move components along their full range of motion several times, then wipe off any excess oil.

SECTION 7: SERVICE

Review the troubleshooting procedures in this section if a problem develops with your machine. If you need replacement parts or additional help with a procedure, call our Technical Support. **Note:** *Please gather the serial number and manufacture date of your machine before calling.*

Troubleshooting

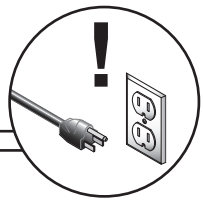

Motor & Electrical

Symptom	Possible Cause	Possible Solution
Machine does not start, or power supply breaker immediately trips after startup.	**1.** Switch disabling key removed. **2.** Incorrect power supply voltage or circuit size. **3.** Power supply circuit breaker tripped or fuse blown. **4.** Motor wires connected incorrectly. **5.** Wiring broken, disconnected, or corroded. **6.** Motor brushes worn out. **7.** ON/OFF switch at fault. **8.** Motor or motor bearings at fault.	**1.** Install switch disabling key. **2.** Ensure correct power supply voltage and circuit size. **3.** Ensure circuit is free of shorts. Reset circuit breaker or replace fuse. **4.** Correct motor wiring connections (**Page 48**). **5.** Fix broken wires or disconnected/corroded connections. **6.** Replace motor brushes (**Page 46**). **7.** Replace switch. **8.** Replace motor.
Machine stalls or is underpowered.	**1.** Workpiece material unsuitable for machine. **2.** Feed rate/cutting speed too fast. **3.** Machine undersized for task. **4.** Motor wired incorrectly. **5.** Motor brushes worn out. **6.** Pulley slipping on shaft. **7.** Belt slipping/pulleys misaligned. **8.** Motor overheated. **9.** Extension cord too long. **10.** Motor or motor bearings at fault.	**1.** Only cut wood/ensure moisture is below 20%. **2.** Decrease feed rate/cutting speed. **3.** Use sharp knives/inserts; reduce feed rate or depth of cut. **4.** Wire motor correctly. **5.** Replace motor brushes (**Page 46**). **6.** Tighten/replace loose pulley/shaft. **7.** Clean/tension/replace belt (**Page 45**); ensure pulleys are aligned. **8.** Clean motor, let cool, and reduce workload. **9.** Move machine closer to power supply; use shorter extension cord. **10.** Replace motor.
Machine has vibration or noisy operation.	**1.** Motor or component loose. **2.** V-belt worn, loose, pulleys misaligned, or belt slapping cover. **3.** Knives/inserts at fault. **4.** Pulley loose. **5.** Incorrectly mounted to workbench. **6.** Motor mount loose/broken. **7.** Cutterhead bearing(s) at fault. **8.** Motor bearings at fault.	**1.** Replace damaged or missing bolts/nuts or tighten if loose. **2.** Inspect/replace belt (**Page 45**). Realign pulleys if necessary. **3.** Resharpen/replace knives/inserts (**Page 38/ Page 36**); set knife alignment/height correctly (**Page 38**). **4.** Secure pulley on shaft. **5.** Adjust feet, shim, or tighten mounting hardware. **6.** Tighten/replace. **7.** Replace bearing(s)/realign cutterhead. **8.** Test by rotating shaft; rotational grinding/loose shaft requires bearing replacement.

Operation

Symptom	Possible Cause	Possible Solution
Table is hard to adjust.	1. Table lock engaged/partially engaged.	1. Completely loosen table lock.
Excessive snipe (gouge in end of board that is uneven with rest of cut); back of workpiece is concave.	1. Outfeed table is set too low, or knives (G0945 only) set too high. 2. Operator pushing down on trailing end (infeed side) of workpiece as it leaves cutterhead.	1. Align outfeed table with cutterhead knives/inserts at top dead center (**Page 40**). 2. Focus most of the workpiece pressure against outfeed table while cutting.
Workpiece stops in middle of cut; front of workpiece is concave.	1. Outfeed table set too high.	1. Align outfeed table with cutterhead knives/inserts at top dead center (**Page 40**).
Workpiece chipping, tear-out, indentations, or overall rough cuts.	1. Workpiece is rough or has loose knots/ surface flaws; not suitable for jointing. 2. Not feeding workpiece to cut "with" the grain. 3. Dull knives/insert(s). 4. Nicked or chipped knives/insert(s). 5. Feeding workpiece too fast. 6. Excessive depth of cut. 7. Lack of proper dust collection or clogged dust port.	1. Inspect workpiece. Use smooth stock without loose knots/surface flaws. 2. Flip workpiece 180° before feeding again. 3. Sharpen/replace knives (**Page 38**); rotate/replace insert(s) (**Page 36**). 4. Replace knives (**Page 38**); rotate/replace insert(s) (**Page 36**). 5. Reduce feed rate. 6. Reduce depth of cut. 7. Clear blockages, ensure dust collection is operating efficiently; upgrade dust collector.
Fuzzy grain left in workpiece.	1. Wood has high moisture content. 2. Dull knives/insert(s).	1. Ensure wood moisture content is less than 20%. Allow to dry if necessary. 2. Sharpen/replace knives (**Page 38**); rotate/replace insert(s) (**Page 36**).
Long lines or ridges that run along the length of the board.	1. Nicked or chipped knives/insert(s). 2. Loose or incorrectly installed insert(s) (G0946/G0947 only). 3. Dirt or debris under carbide insert(s) (G0946/ G0947 only).	1. Replace knives (**Page 38**); rotate/replace insert(s) (**Page 36**). 2. Remove/replace insert(s), and re-install properly (**Page 36**). 3. Remove insert(s), clean bottom of insert/cutterhead mounting pocket, and re-install properly (**Page 36**).

Operation

Symptom	Possible Cause	Possible Solution
Uneven cutter marks, wavy surface, or chatter marks across face of workpiece.	**1.** Feeding workpiece too fast. **2.** Knives/insert(s) not adjusted at even heights in cutterhead. **3.** Dirt or debris under carbide insert(s) (G0946/G0947 only).	**1.** Reduce feed rate. **2.** Adjust knives so they are set up evenly in cutterhead (**Page 38**). Remove, clean, and re-install any inserts that are "raised" in cutterhead (**Page 36**). **3.** Remove insert(s), clean bottom of insert/cutterhead mounting pocket, and re-install (**Page 36**).
Glossy surface; scorching or burn marks on workpiece.	**1.** Dull knives/insert(s). **2.** Feed rate too slow.	**1.** Sharpen/replace knives (**Page 38**); rotate/replace insert(s) (**Page 36**). **2.** Increase feed rate.
Workpiece is concave or convex along its length after jointing.	**1.** Workpiece not held with even pressure against outfeed table during cut. **2.** Workpiece too uneven at start of operation. **3.** Tables not parallel with cutterhead body and each other. **4.** Table extensions not parallel with tables.	**1.** Apply even downward pressure against workpiece throughout entire travel along outfeed side during cut. **2.** Take partial cuts to remove extreme high spots before doing a full pass. **3.** Check/adjust table parallelism (**Page 40**). **4.** Check/adjust table extension parallelism (**Page 42**).
Workpiece edges not square; tapered cut produced.	**1.** Fence not square to table(s); fence tilt unlocked. **2.** Warped infeed or outfeed table. **3.** Knives/insert(s) not adjusted at even heights in cutterhead. **4.** Table extensions not parallel with tables.	**1.** Square fence to table(s); lock fence. **2.** Regrind/replace table. **3.** Adjust knives so they are set up evenly in cutterhead (**Page 38**). Remove, clean, and re-install any inserts that are "raised" in cutterhead (**Page 36**). **4.** Check/adjust table extension parallelism (**Page 42**).

Rotating/Replacing Inserts (G0946/G0947)

The spiral cutterhead is equipped with 2-sided indexable inserts. Each insert can be removed, rotated, and re-installed to use either of its two cutting edges. If one cutting edge becomes dull or damaged, simply rotate it 90° (see **Figure 34**) to use the adjacent sharp cutting edge.

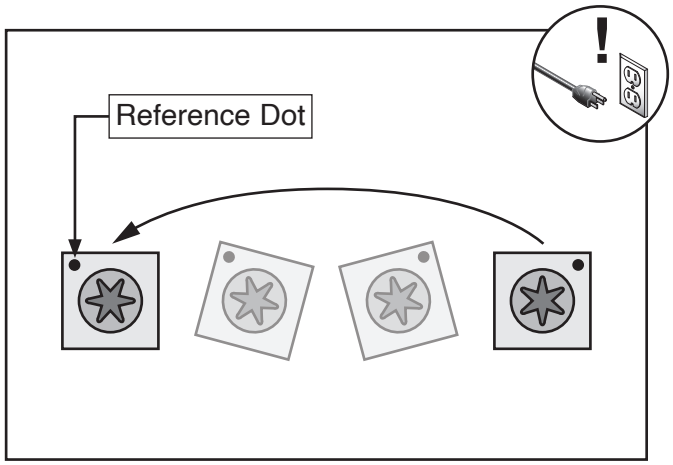

Figure 34. Insert rotating sequence.

The inserts have a reference dot on one corner. The position of the reference dot on installed inserts can be used to track which edges are sharp/unused and which edges are dull or damaged. Replace inserts once the reference dot has been rotated back to its original position.

Items Needed	**Qty**
Heavy Leather Gloves	1 Pair
Indexable Inserts 14 x 14 x 2mm	As Needed
Torx Head Screws T-25 10-32 x ½"	As Needed
T-Handle Torx Driver T-25	1
Hex Wrench 4mm	1
Torque Wrench 0–50 in.-lb	1
Degreaser	As Needed
Light Machine Oil	As Needed
Clean Shop Rags	As Needed

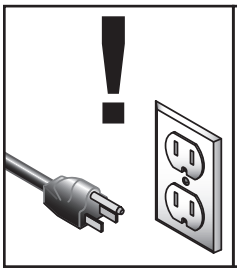

⚠WARNING

To reduce risk of shock or accidental startup, always disconnect machine from power before adjustments, maintenance, or service.

To rotate or replace cutterhead inserts:

1. DISCONNECT MACHINE FROM POWER!
2. Put on heavy leather gloves, move fence all the way back, and lower infeed table to provide access to cutterhead inserts.
3. Loosen (2) button head cap screws securing cutterhead guard to jointer base, then remove cutterhead guard.
4. Insert included Torx driver in the cutterhead rotation guide on front of jointer, and rotate cutterhead as needed to make inserts accessible for rotation/removal.

⚠CAUTION

The indexable inserts are very sharp and can easily cut your hands. ALWAYS use caution when handling these parts to reduce risk of personal injury.

5. Carefully clean away all sawdust or debris from top of insert, Torx screw, and surrounding area (see **Figure 35**).

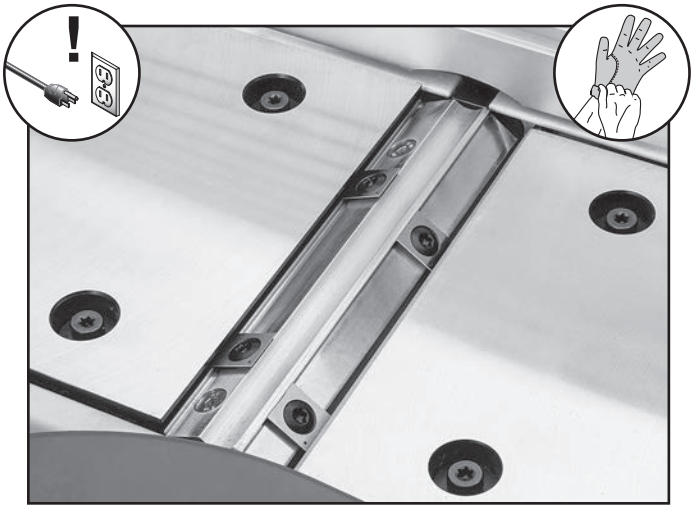

Figure 35. Cutterhead area cleaned.

6. Remove cutterhead Torx screw and insert (see **Figure 36**), then carefully clean away all dust and debris from insert and insert surface on cutterhead.

   IMPORTANT: This step is critical for achieving a smooth finish with cutting operations. Dirt or dust trapped under insert during installation will slightly raise insert in cutterhead, which will leave marks on workpiece after jointing.

   Tip: *Use low-pressure compressed air or a vacuum nozzle to clean cutterhead surface.*

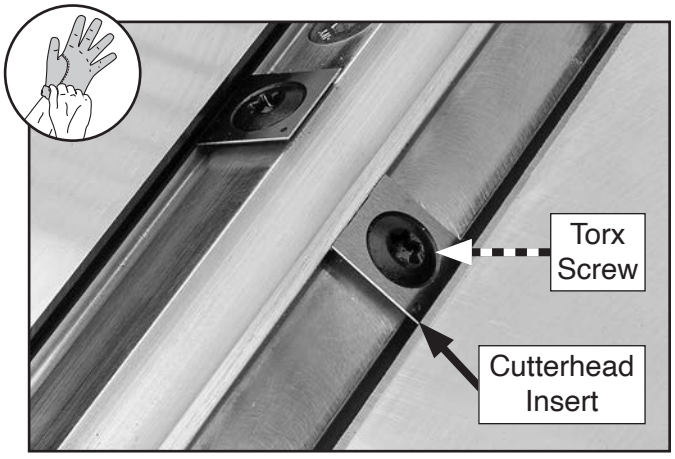

Figure 36. Cutterhead insert and Torx screw.

7. Install insert with a sharp cutting edge facing outward. Make sure insert is properly seated on cutterhead before securing.

   — If both insert cutting edges have been used, replace insert with a new one. Always position reference dot in same position when installing a new insert to aid in rotational sequencing.

8. Lubricate Torx screw threads with a small amount of light machine oil, wipe excess off, and torque screw to 48–50 inch/pounds.

   IMPORTANT: If too much oil is applied to the threads, excess will attempt to squeeze out of threaded hole as you install insert and force it to raise slightly, making it out of alignment.

9. Install cutterhead guard removed in **Step 3** on **Page 36**.

Checking/Setting Knives (G0945)

Setting the knives correctly is crucial to the proper operation of the jointer, and it plays an important role in keeping the knives sharp. If one knife is higher than the others, it will do the majority of the work, and thus, become dull much faster.

The cutterhead in this jointer is equipped with jack screws that allow for careful positioning of the knives. When replacing knives, clean the knife clamp and inside the cutterhead slot to remove all pitch or sawdust, then coat the knife and clamp with a metal protectant.

For best results, tables must be parallel with each other (see **Checking/Adjusting Table Parallelism** on **Page 40**).

⚠CAUTION

Cutterhead knives are very sharp and can easily cut your hands. ALWAYS use caution when handling these parts to reduce risk of personal injury.

NOTICE

To maintain accurate and consistent jointing results, we do not recommend sharpening knives yourself. Instead, replace dull knives or have them professionally sharpened.

Items Needed	Qty
Heavy Leather Gloves	1 Pair
Straightedge 24"	1
Hex Wrench 4mm	1
Replacement Knives	As Needed
Light Machine Oil	As Needed
Clean Shop Rags	As Needed

Checking Knife Height

1. DISCONNECT MACHINE FROM POWER!

2. Loosen (2) button head cap screws securing cutterhead guard to jointer base, then remove cutterhead guard.

3. Using a straightedge on outfeed table, check height of each knife at positions shown in **Figure 37**.

   — Knives are set correctly when they just touch bottom of straightedge at top dead center (TDC) (see **Figure 37**) in each straightedge position.

   — If knives *do not* touch straightedge, or they lift up at any position, knives need to be adjusted. Proceed to **Step 2** of **Setting/Replacing Knives**.

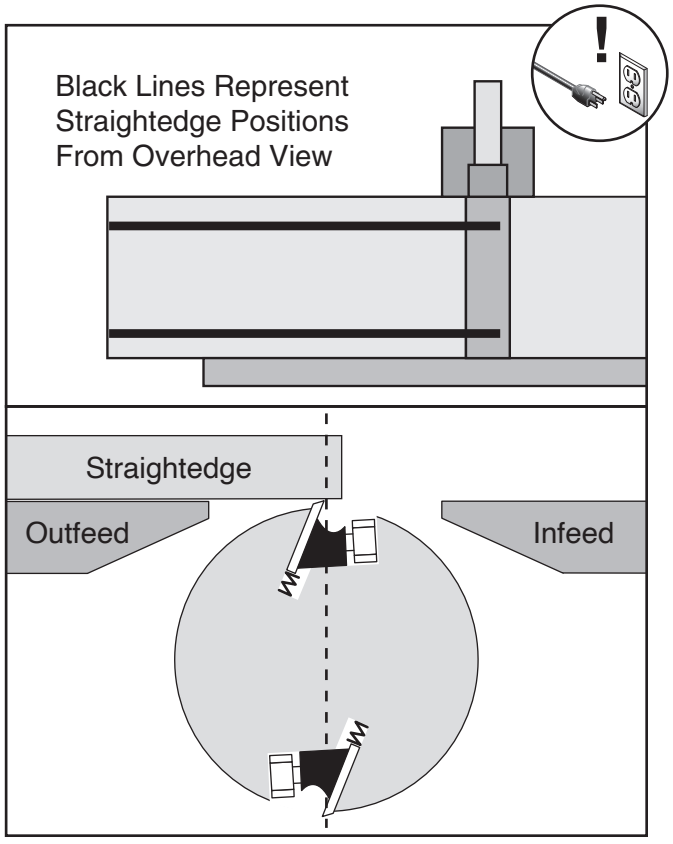

Figure 37. Checking knife height at top dead center with a straightedge.

Setting/Replacing Knives

1. DISCONNECT MACHINE FROM POWER!

2. Put on heavy leather gloves, move fence all the way back, and remove cutterhead guard.

3. Lower infeed table to ½" on depth-of-cut scale to provide access to cutterhead knives.

4. Rotate cutterhead until knife clamp is on top, then engage cutterhead lock by moving lock up and over end of cutterhead, as shown in **Figure 38**.

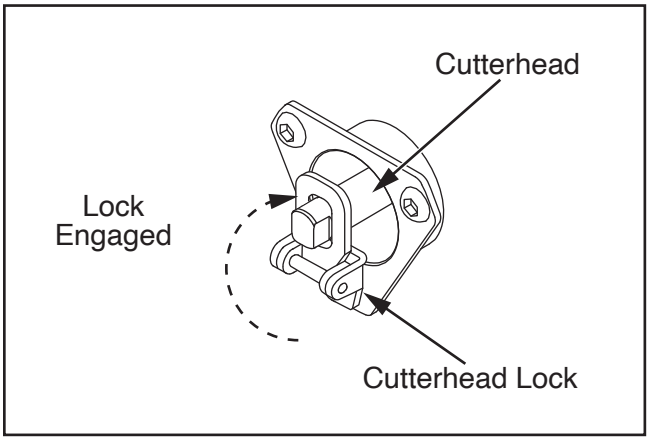

Figure 38. Cutterhead lock engaged.

5. Loosen (4) cutterhead knife clamp screws, as shown in **Figure 39**.

   — If setting knives, proceed to **Step 6**.

   — If replacing knives, carefully remove knife and clamp from cutterhead, then install new knife and re-install clamp. Proceed to **Step 6**.

   Note: *Clean cutterhead thoroughly before installing new or sharpened knives.*

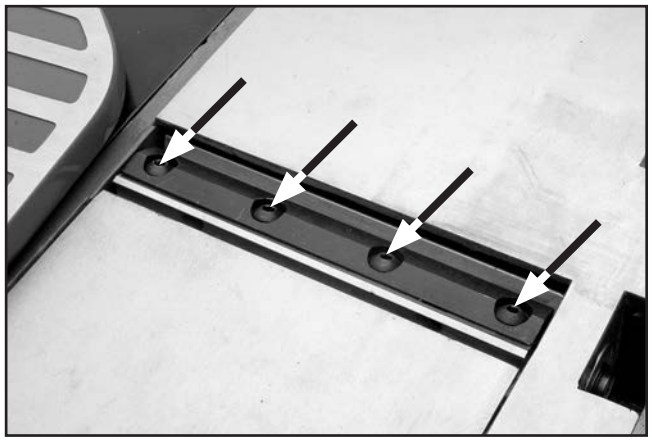

Figure 39. Cutterhead knife clamp screws.

6. Access (2) jack screws through holes in cutterhead (see **Figure 40**). Rotate jack screws to raise or lower knife. When knife is set correctly, it will barely touch bottom of straightedge in each of the straightedge positions. Snug clamp bolts just tight enough to hold knife in place, and repeat **Steps 5–6** with remaining knife.

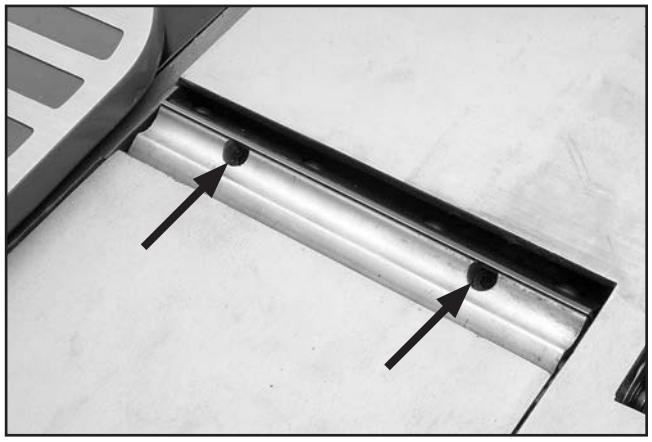

Figure 40. Knife adjustment jack screws.

7. Verify knives are set even with outfeed table by performing **Step 3** of **Checking Knife Height** on **Page 38**.

8. When knife heights are set correctly, fully tighten each of the knives' clamp screws according to the tightening sequence shown in **Figure 41**.

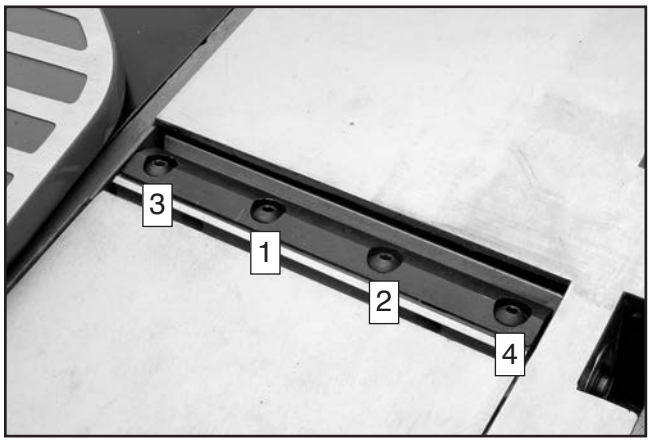

Figure 41. Knife clamp screw tightening sequence.

9. Install cutterhead guard removed in **Step 2** on **Page 38** and verify proper operation.

10. Disengage cutterhead lock before beginning operations.

Checking/Adjusting Table Parallelism

If the infeed and outfeed tables are not parallel with the cutterhead and each other, then poor cutting results and kickback can occur.

Each table has four leveling adjusters for adjusting table parallelism. Table parallelism is factory-set, and should not normally need to be adjusted when the machine is new. However, after prolonged use, or if the machine has been jarred during lifting or transportation, it may become necessary to adjust parallelism.

The correct order for adjusting table parallelism is to first adjust the outfeed table parallel with the cutterhead knives/inserts, then adjust the infeed table parallel with the outfeed table.

⚠CAUTION

Cutterhead knives/inserts are very sharp and can easily cut your hands. ALWAYS use caution when making adjustments near these parts to reduce risk of personal injury.

Items Needed	Qty
Straightedge 24"	1
T-Handle Torx Driver T-25	1
Hex Wrench 4mm	1
Flat Head Screwdriver 3/8"	1

Checking/Adjusting Outfeed Table

1. DISCONNECT MACHINE FROM POWER!

2. Remove cutterhead guard, fence, and belt cover.

3. Place straightedge on outfeed table so it hangs over cutterhead, then use motor pulley to rotate cutterhead until knife/insert is at TDC (its highest point during rotation), as shown in **Figures 42–43**.

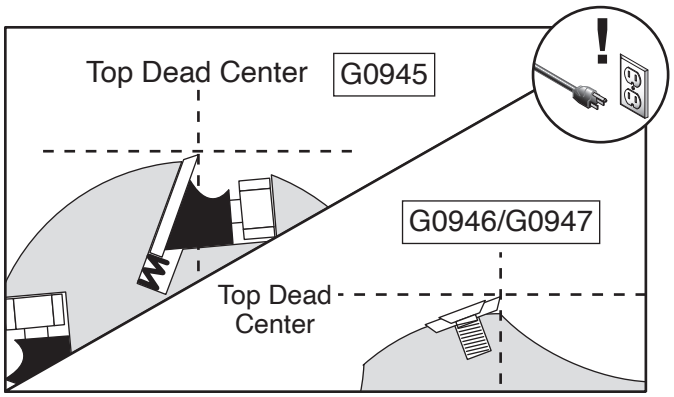

Figure 42. Cutterhead insert at TDC.

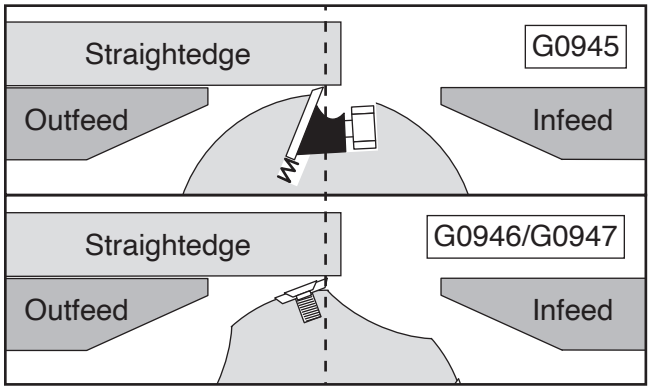

Figure 43. Using straightedge to check outfeed table height.

4. Place straightedge in the positions shown in **Figure 44**.

   — If straightedge touches knife/insert at TDC and sits flat across outfeed table in all positions, then outfeed table is parallel. Proceed to **Checking/Adjusting Infeed Table** on **Page 41**.

   — If straightedge does not touch knife/insert and sit flat across outfeed table in any one position, then outfeed table is not parallel. Proceed to **Step 5**.

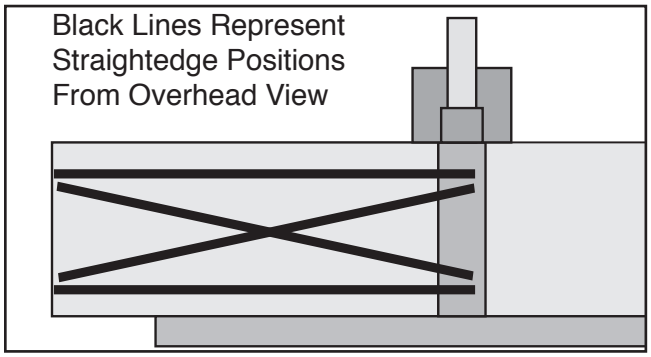

Figure 44. Straightedge positions for checking outfeed table parallelism.

5. Access outfeed table leveling adjusters by removing (4) cap screws and flat washers from table openings (see **Figure 45**).

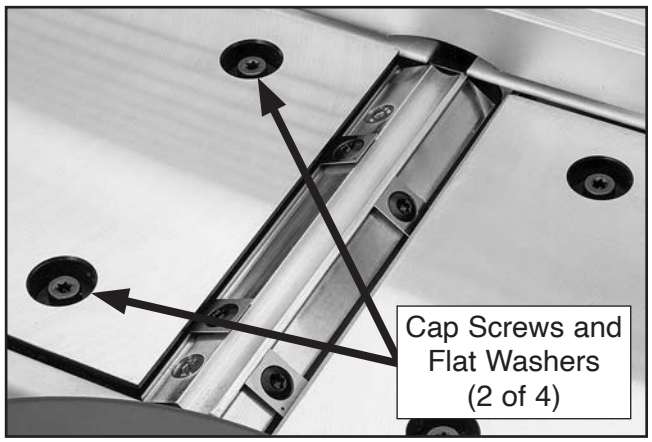

Figure 45. Example of outfeed table leveling adjuster location.

6. Use flat head screwdriver to rotate leveling adjuster(s) (see **Figure 46**) until straightedge touches TDC of knife/insert and lays flat across outfeed table in positions shown in **Figure 44** on **Page 40**.

   Note: *Rotate leveling adjusters clockwise to lift table, and counterclockwise to lower table.*

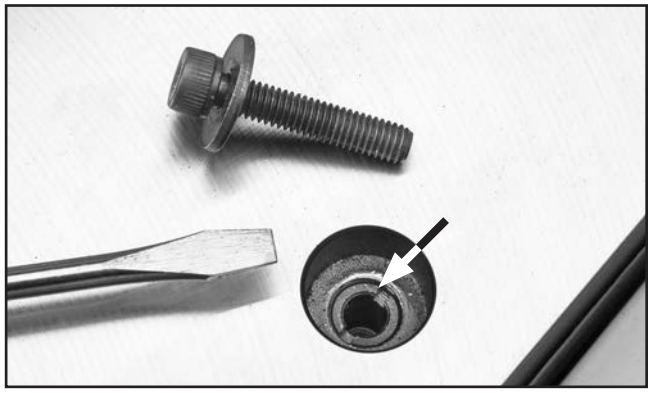

Figure 46. Leveling adjuster location.

7. Verify outfeed table is parallel to TDC of cutterhead knives/inserts, then install flat washers and cap screws removed in **Step 5** to secure.

Checking/Adjusting Infeed Table

1. Follow all steps in **Checking/Adjusting Outfeed Table** to verify outfeed table is parallel with TDC of cutterhead knives/inserts.

2. Rotate cutterhead so knives/inserts will not interfere with straightedge, then place straightedge on infeed and outfeed tables and adjust infeed table even with outfeed table, as shown in **Figure 47**.

   Note: *Infeed table depth-of-cut scale should be set at "0".*

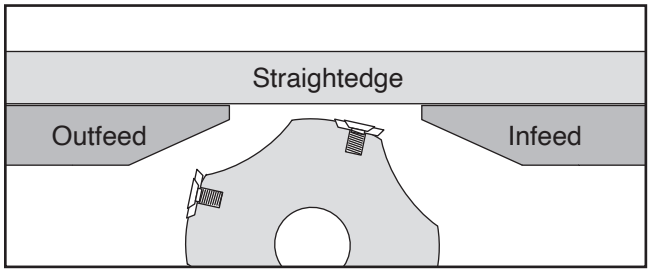

Figure 47. Example of infeed table set to outfeed table height.

3. Place straightedge in the positions shown in **Figure 48**. In each position, straightedge should sit flat against both outfeed table and infeed table.

   — If straightedge sits flat against both infeed and outfeed tables in all positions, then tables are parallel. Proceed to **Step 7**.

   — If straightedge does not sit flat against both infeed and outfeed tables in any of the positions, then proceed to **Step 4**.

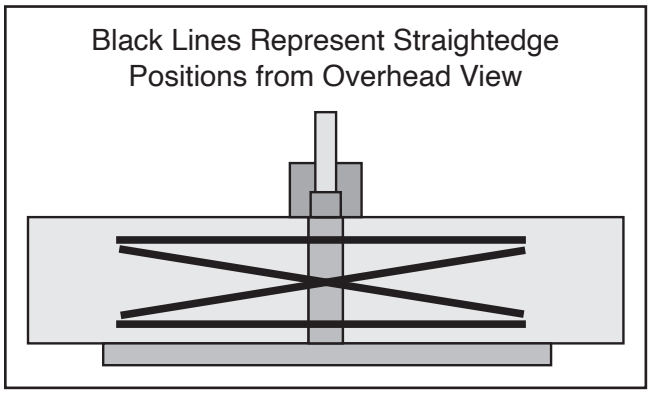

Figure 48. Example of straightedge positions for checking infeed/outfeed table parallelism.

4. Access infeed table leveling adjusters by removing (4) cap screws and flat washers from table openings (see **Figure 49**).

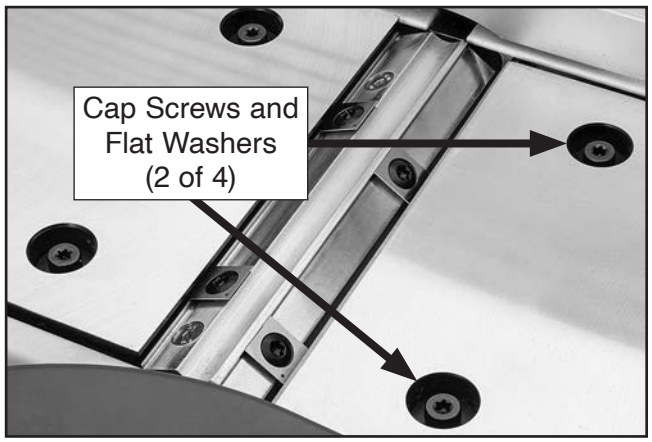

Figure 49. Example of infeed table leveling adjuster location.

5. Use flat head screwdriver to rotate leveling adjuster(s) (see **Figure 50**) until straightedge lays flat across both tables, in positions shown in **Figure 48**.

   Note: *Rotate leveling adjusters clockwise to lift table, and counterclockwise to lower table.*

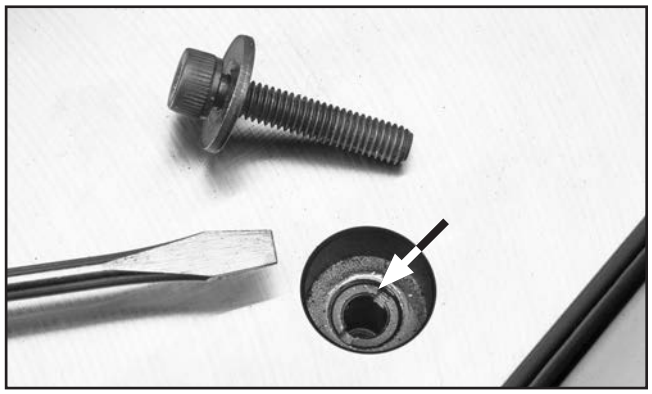

Figure 50. Leveling adjuster location.

6. When infeed table is parallel to outfeed table, install cap screws and flat washers removed in **Step 4** to secure.

7. Install fence, cutterhead guard, and belt cover.

8. **G0947 Only:** Proceed to **Checking/Adjusting Extension Parallelism (G0947)**.

Checking/Adjusting Extension Parallelism (G0947)

The Model G0947 infeed and outfeed table extensions can be adjusted for parallelism if necessary. This process is the same for both table extensions.

IMPORTANT: The following steps are intended to be performed directly after the steps involved in **Checking/Adjusting Table Parallelism** beginning on **Page 40**. DO NOT continue until you have performed those steps.

Items Needed	**Qty**
Straightedge 24"	1
Hex Wrench 2.5mm	1

To check/adjust table extension parallelism:

1. DISCONNECT MACHINE FROM POWER!

2. Loosen (2) table extension knobs and fully extend table extension, then secure knobs (see **Figure 51**).

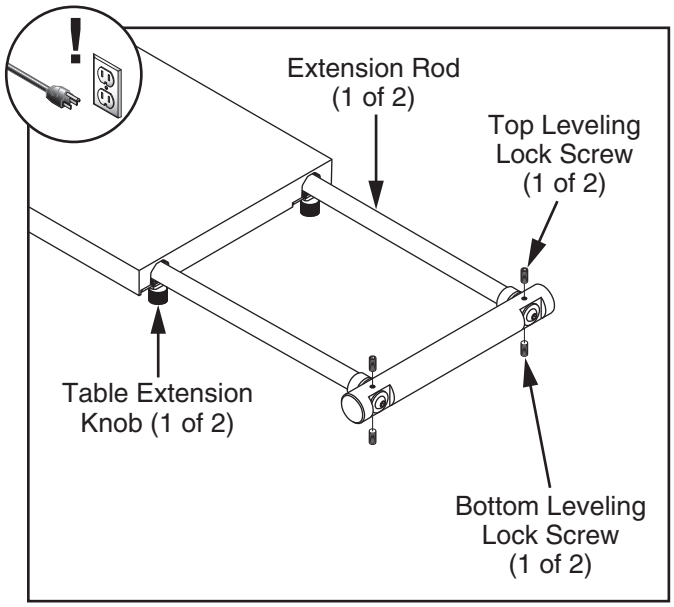

Figure 51. Location of table extension components.

3. Place straightedge in the positions shown in **Figure 52**. In each position, straightedge should touch table extension handle and sit flat on table.

   — If straightedge just touches table extension handle and sits flat on table in all positions, then table extension is already parallel with table. Proceed to **Step 6**.

   — If straightedge *does not* touch table extension handle and sit flat across table in any of the positions, then table extension is not parallel with table. Proceed to **Step 4**.

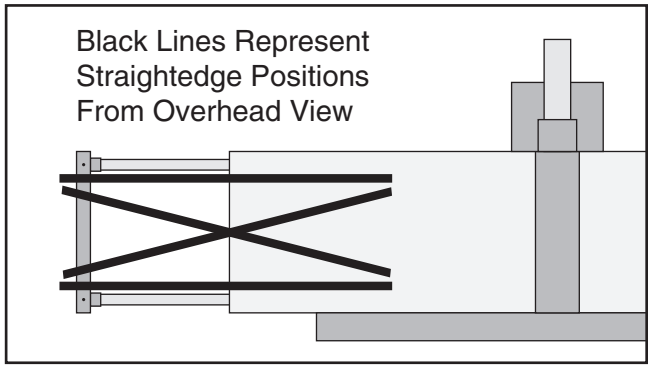

Figure 52. Straightedge positions for checking infeed/outfeed table extension parallelism.

4. Adjust top and bottom leveling lock screws (see **Figure 51** on **Page 42**).

   — Tighten top leveling lock screw/loosen bottom leveling lock screw to *raise* handle.

   — Loosen top leveling lock screw/tighten bottom leveling lock screw to *lower* handle.

5. Repeat **Step 3**.

   — If straightedge touches table extension handle and sits flat on table, then table extension is parallel with table. Proceed to **Step 6**.

   — If straightedge *does not* touch table extension handle and sit flat on table, then table extension is not parallel with table. Repeat **Step 4**.

6. Loosen (2) table extension knobs and retract table extension, then secure knobs.

Checking/Adjusting Fence Positive Stops

The fence has adjustable positive stops at the 90º and 45º outward (135º) positions for quickly and accurately setting the desired fence angle.

Note: *To ensure accurate results when jointing, check the accuracy of these settings frequently (every month at a minimum).*

⚠ CAUTION

The knives/inserts are very sharp and can easily cut your hands. ALWAYS use caution when making adjustments near these parts to reduce risk of personal injury.

NOTICE

Although some figures might not exactly represent your machine, this process is the same on the G0945, G0946, and G0947.

Items Needed	Qty
Hex Wrench 2.5mm	1
Combination Square	1

To check/adjust fence positive stops:

1. DISCONNECT MACHINE FROM POWER!

2. Loosen fence slide lock handle and slide fence to desired position, then tighten handle.

3. Loosen fence tilt lock handle and adjust fence to 90º position, then tighten handle.

   Note: *Both lock handles can be repositioned by pulling up on the handle and sliding the square nut underneath to desired position.*

4. Place square on jointer table with 90º side against fence (see **Figure 53**).

   — If fence *is* flush against square, 90º stop is set correctly. Proceed to **Step 6**.

   — If fence *is not* flush against square, proceed to **Step 5**.



Figure 53. Example of checking 90º fence angle with combination square.

5. Adjust fence until it is flush against combination square, then tighten 90º set screw on fence slide bracket until it contacts stop block (see **Figure 54**).

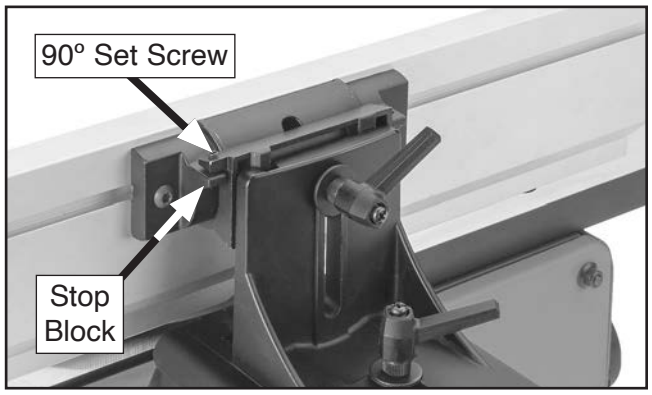

Figure 54. Location of 90º fence angle adjustment components.

6. Loosen fence tilt lock handle and adjust fence to 45º outward position (see **Figure 55**), then tighten handle.

7. Place combination square on jointer table with 45º outward side against fence (see **Figure 55**).

— If fence is flush against combination square, 45º outward fence positive stop is set correctly. Proceed to **Step 9**.

— If fence is not flush against combination square, proceed to **Step 8**.



Figure 55. Example of checking 45º fence angle with combination square.

8. Adjust fence until it is flush against combination square, then tighten 45º set screw on fence slide bracket until it contacts stop block (see **Figure 56**).

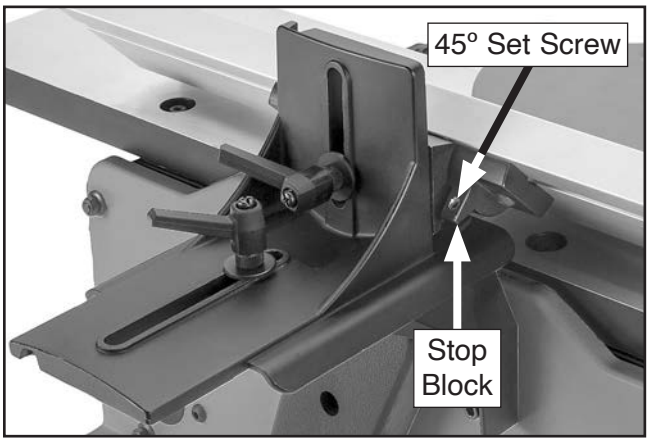

Figure 56. Adjusting 45º outward fence angle.

9. Loosen fence tilt lock handle and adjust fence to 90º position, then tighten handle.

10. Place combination square on jointer table with 90º side against fence, and verify fence is flush against combination square.

— If fence *is* flush against combination square, fence positive stops are set correctly.

— If fence *is not* flush against combination square, perform **Steps 5–10** to properly set fence positive stops.

Replacing/Tensioning Belt

To ensure optimum power transmission from the motor to the cutterhead, the belt must be in good condition (free from cracks, fraying, and wear) and properly tensioned.

⚠CAUTION

Belts and pulleys will be hot after operation. Allow them to cool before handling.

NOTICE

A small amount of black belt dust at the bottom of the belt cover is normal during the life of the machine, and does not indicate a problem with the machine or belt.

Items Needed	Qty
Replacement Belt (P0945040)	1
Hex Wrench 4mm	1

Replacing Belt

1. DISCONNECT MACHINE FROM POWER!
2. Loosen (1) button head cap screw securing belt cover, then remove cover.
3. Loosen (3) button head cap screws around motor pulley (see **Figure 57**). DO NOT remove screws!

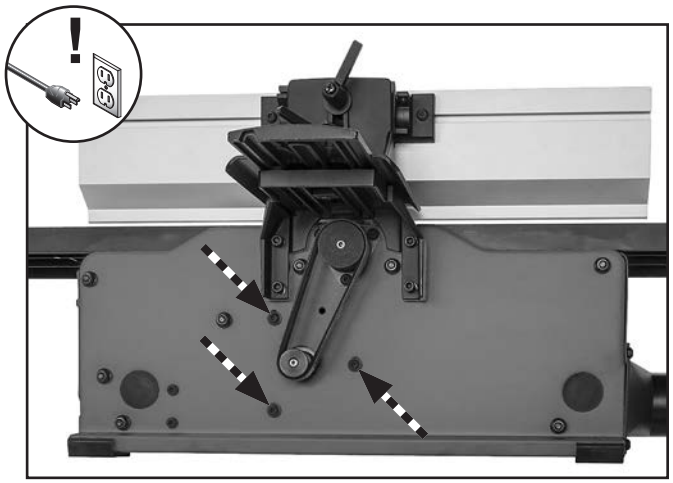

Figure 57. Location of screws around motor pulley.

4. Lift motor pulley and remove belt.
5. Install new belt over motor pulley first, then lift motor pulley and install remaining portion of belt over cutterhead pulley.
6. Proceed to **Step 3** in **Tensioning Belt** below.

Tensioning Belt

1. DISCONNECT MACHINE FROM POWER!
2. Perform **Steps 2–3** as instructed in **Replacing Belt**.
3. Press down on motor pulley to keep tension on belt, and tighten (3) button head cap screws loosened during **Step 3** of **Replacing Belt**.
4. Press belt with moderate pressure in center to check belt tension. Belt is correctly tensioned when there is approximately ¼" deflection when pushed (see **Figure 58**).

   — If there is greater than ¼" deflection when checking belt tension, loosen (3) button head cap screws around motor pulley, then repeat **Steps 3–4** until tension is correct.

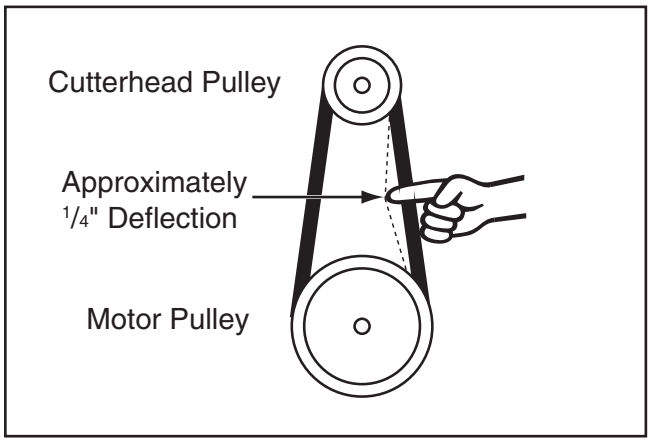

Figure 58. Checking ¼" belt deflection.

5. Install belt cover using (1) button head cap screw removed in **Step 2** of **Replacing Belt**.

Replacing Motor Brushes

This jointer is equipped with a universal motor that uses two carbon brushes to transmit electrical current inside the motor. These brushes are considered to be regular "wear items" or "consumables" that will need to be replaced during the life of the motor. The frequency of required replacement is often related to how much the motor is used and how hard it is pushed.

NOTICE

Replace both carbon brushes (part number: P0945300-1) at the same time when the motor no longer reaches full power, or when the brushes measure less than ¼" long (new brushes are ⅝" long).

If your machine is used frequently, we recommend keeping an extra set of these replacement brushes on-hand to avoid any downtime.

Items Needed	Qty
Carbon Motor Brushes (P0945300-1)	2
Penny (or Dime)	1
Shop Vacuum	1
Clean Shop Rags	As Needed

To replace motor brushes:

1. DISCONNECT MACHINE FROM POWER!

2. While facing rear of jointer, tip machine away from you until it rests on the cutterhead guard mounting bracket.

   Note: *Place clean shop rags under jointer to help prevent damaging machine finish.*

3. Vacuum all dust and debris from motor area.

4. Unscrew brush covers (see **Figure 59**).

   Note: *When removing brush covers, a spring will pop out of the socket; the carbon brush is firmly attached to this spring.*

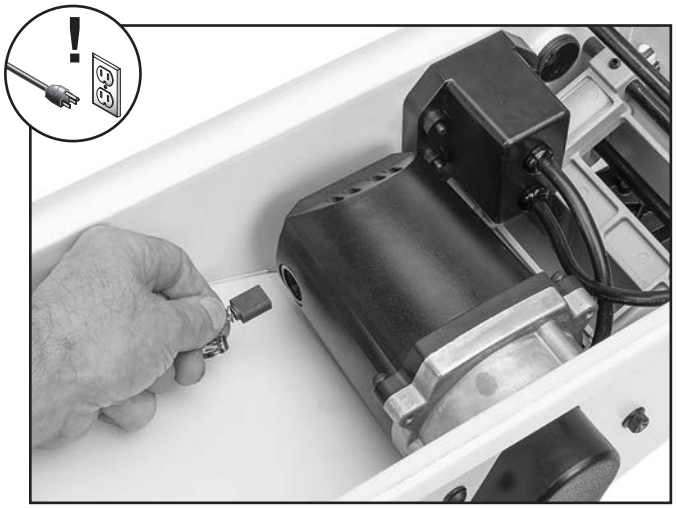

Figure 59. Example of removing motor brush.

5. Check brushes for wear. If a brush is worn to less than ¼" in length, replace both brushes.

6. Insert brush assemblies (positioning them so they slide into the built-in slots) into brush sockets, then press brush cover against spring and tighten.

7. Stand machine upright.

8. Perform **Test Run** procedure on **Page 22**.

   — If jointer runs properly, motor brush replacement is complete.

   — If motor does not start, brushes are not correctly aligned in sockets, or there is another problem with the motor or wiring. Refer to **Wiring Diagram** on **Page 48** for assistance.

SECTION 8: WIRING

These pages are current at the time of printing. However, in the spirit of improvement, we may make changes to the electrical systems of future machines. Compare the manufacture date of your machine to the one stated in this manual, and study this section carefully.

If there are differences between your machine and what is shown in this section, call Technical Support at (570) 546-9663 for assistance BEFORE making any changes to the wiring on your machine. An updated wiring diagram may be available. **Note:** *Please gather the serial number and manufacture date of your machine before calling. This information can be found on the main machine label.*

⚠WARNING
Wiring Safety Instructions

SHOCK HAZARD. Working on wiring that is connected to a power source is extremely dangerous. Touching electrified parts will result in personal injury including but not limited to severe burns, electrocution, or death. Disconnect the power from the machine before servicing electrical components!

MODIFICATIONS. Modifying the wiring beyond what is shown in the diagram may lead to unpredictable results, including serious injury or fire. This includes the installation of unapproved aftermarket parts.

WIRE CONNECTIONS. All connections must be tight to prevent wires from loosening during machine operation. Double-check all wires disconnected or connected during any wiring task to ensure tight connections.

CIRCUIT REQUIREMENTS. You MUST follow the requirements at the beginning of this manual when connecting your machine to a power source.

WIRE/COMPONENT DAMAGE. Damaged wires or components increase the risk of serious personal injury, fire, or machine damage. If you notice that any wires or components are damaged while performing a wiring task, replace those wires or components.

MOTOR WIRING. The motor wiring shown in these diagrams is current at the time of printing but may not match your machine. If you find this to be the case, use the wiring diagram inside the motor junction box.

CAPACITORS/INVERTERS. Some capacitors and power inverters store an electrical charge for up to 10 minutes after being disconnected from the power source. To reduce the risk of being shocked, wait at least this long before working on capacitors.

EXPERIENCING DIFFICULTIES. If you are experiencing difficulties understanding the information included in this section, contact our Technical Support at (570) 546-9663.

NOTICE

The photos and diagrams included in this section are best viewed in color. You can view these pages in color at www.grizzly.com.

COLOR KEY

BLACK	Bk	BLUE	Bl	YELLOW	Yl	LIGHT BLUE	Lb
WHITE	Wt	BROWN	Br	YELLOW GREEN	Yg	BLUE WHITE	Bw
GREEN	Gn	GRAY	Gy	PURPLE	Pu	TURQUOISE	Tu
RED	Rd	ORANGE	Or	PINK	Pk		

Wiring Diagram

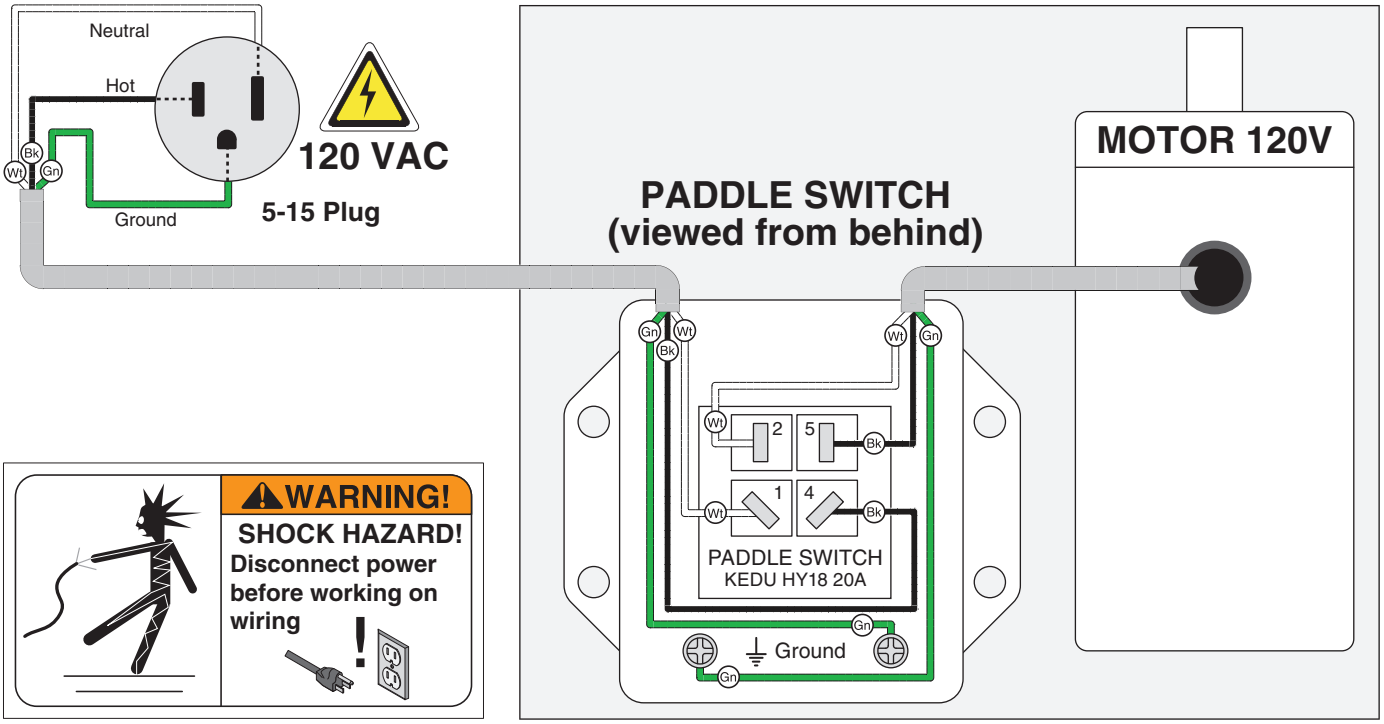

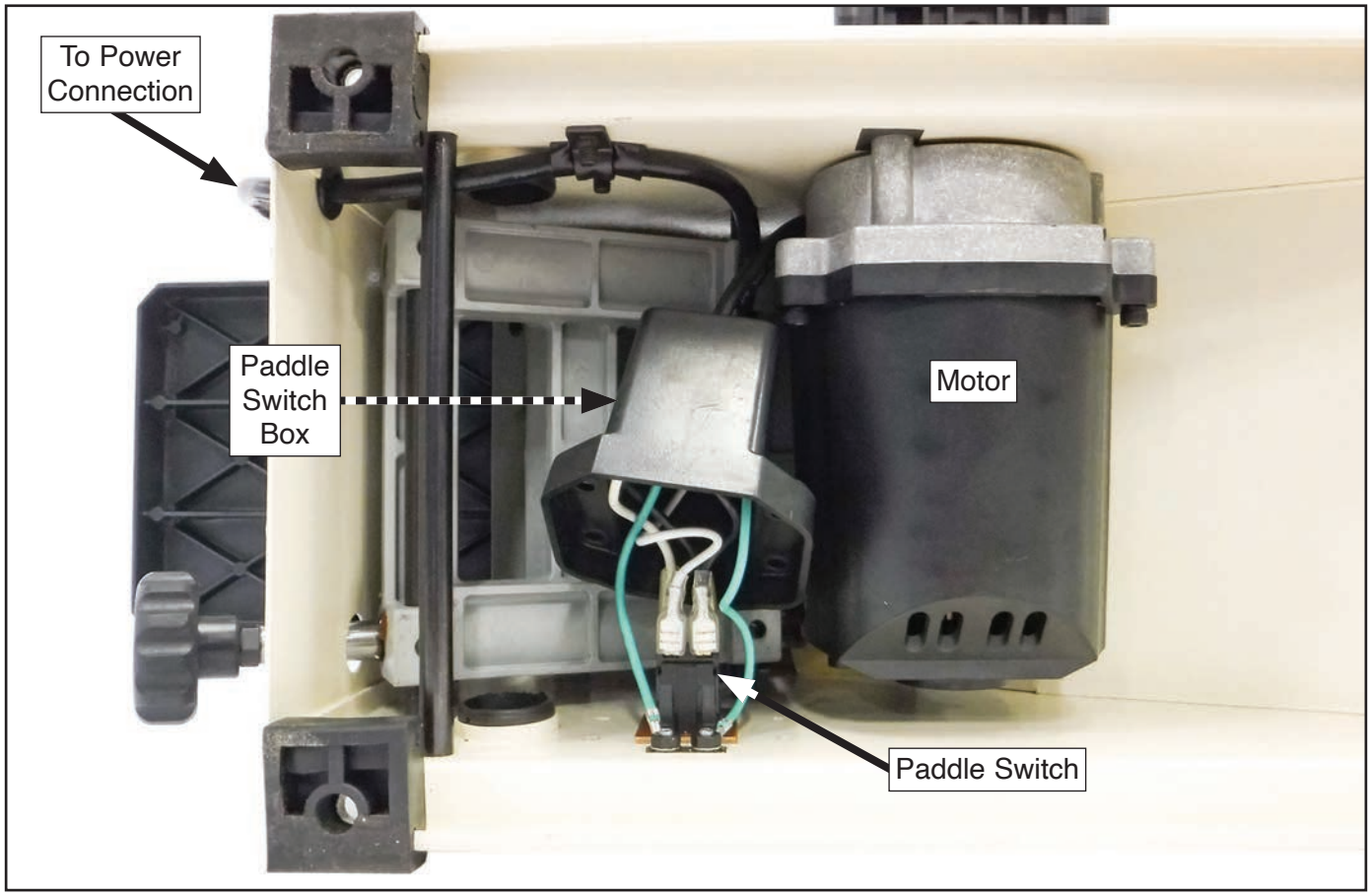

Figure 60. Wiring overview.

SECTION 9: PARTS

We do our best to stock replacement parts when possible, but we cannot guarantee that all parts shown are available for purchase. Call **(800) 523-4777** or visit **www.grizzly.com/parts** to check for availability.

G0945 Main

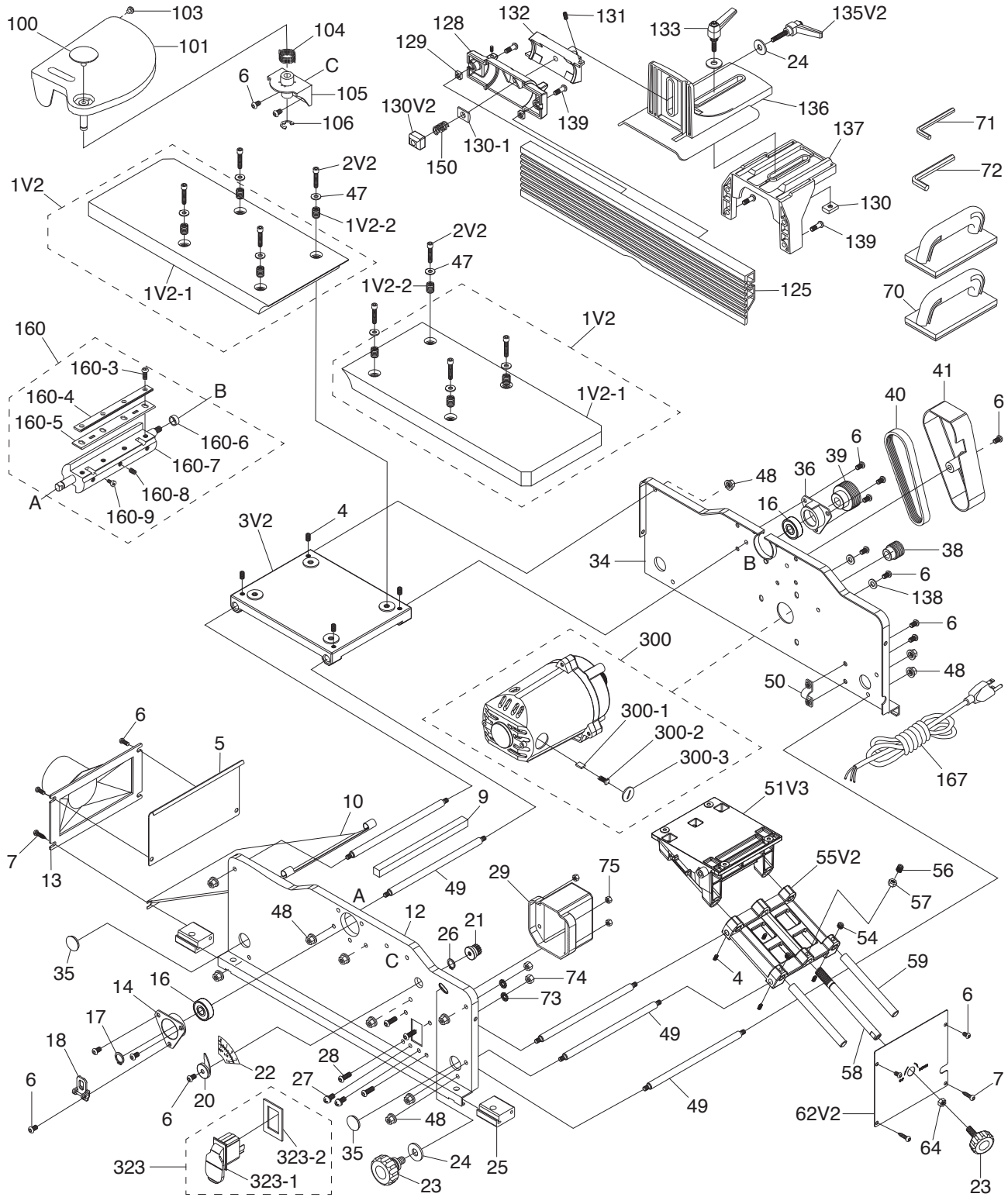

BUY PARTS ONLINE AT GRIZZLY.COM!
Scan QR code to visit our Parts Store.

G0945 Main Parts List

REF	PART #	DESCRIPTION
1V2	P0945001V2	TABLE ASSEMBLY V2.12.23
1V2-1	P0945001V2-1	TABLE
1V2-2	P0945001V2-2	SET SCREW M12-1.25 X 15 HOLE-PT, SLOT
2V2	P0945002V2	CAP SCREW TORX M6-1 X 30 V2.12.23
3V2	P0945003V2	OUTFEED TABLE SUPPORT V2.12.23
4	P0945004	SET SCREW M6-1 X 8
5	P0945005	DUST CHUTE COVER
6	P0945006	BUTTON HD CAP SCR M6-1 X 12
7	P0945007	TAP SCREW 1/4 X 5/8
9	P0945009	FOAM SEAL
10	P0945010	DUST CHUTE
12	P0945012	FRONT BASE PANEL
13	P0945013	DUST PORT 2-1/2"
14	P0945014	FRONT BEARING RETAINER
16	P0945016	BALL BEARING 6201ZZ
17	P0945017	EXT RETAINING RING 12MM
18	P0945018	CUTTERHEAD LOCK
20	P0945020	SCALE POINTER
21	P0945021	SCALE GEAR
22	P0945022	SCALE PLATE
23	P0945023	KNOB BOLT M8-1.25 X 18, 12-LOBE, D49
24	P0945024	FENDER WASHER 8MM
25	P0945025	FOOT PAD
26	P0945026	EXT RETAINING RING 16MM
27	P0945027	PHLP HD SCR M5-.8 X 8
28	P0945028	BUTTON HD CAP SCR M5-.8 X 25
29	P0945029	PADDLE SWITCH BOX
34	P0945034	REAR BASE PANEL
35	P0945035	ROUND PLUG 35MM
36	P0945036	REAR BEARING RETAINER
38	P0945038	MOTOR PULLEY
39	P0945039	CUTTERHEAD PULLEY
40	P0945040	POLY-V BELT 125J5
41	P0945041	BELT COVER
47	P0945047	FENDER WASHER 6MM
49	P0945049	STUD-DE M6-1 X 100, 12
50	P0945050	POWER CORD CLAMP
51V3	P0945051V3	INFEED TABLE SUPPORT V3.12.23
54	P0945054	SET SCREW M6-1 X 10
55V2	P0945055V2	SUPPORT BRACKET V2.03.23
56	P0945056	SET SCREW M6-1 X 16 DOG-PT
57	P0945057	HEX NUT M6-1
58	P0945058	ADJUSTMENT ROD
59	P0945059	ADJUSTMENT SHAFT

REF	PART #	DESCRIPTION
62V2	P0945062V2	RIGHT BASE PANEL V2.03.23
64	P0945064	HEX NUT M8-1.25
70	P0945070	PUSH BLOCK
71	P0945071	HEX WRENCH 2.5MM
72	P0945072	HEX WRENCH 4MM
73	P0945073	EXT TOOTH WASHER 5MM
74	P0945074	HEX NUT M5-.8
75	P0945075	LOCK NUT M5-.8
100	P0945100	ROUND PLUG 42MM
101	P0945101	CUTTERHEAD GUARD
103	P0945103	RUBBER BUMPER
104	P0945104	TORSION SPRING 1.6 X 23MM
105	P0945105	GUARD MOUNTING BRACKET
106	P0945106	E-CLIP 10MM
125	P0945125	FENCE
128	P0945128	TILT BRACKET
129	P0945129	T-SLOT NUT 7, M6-1
130V2	P0945130V2	TAPERED SQUARE NUT M8-1.25 V2.03.23
130-1	P0945130-1	CURVED SQUARE WASHER 8MM
131	P0945131	SET SCREW M5-.8 X 8
132	P0945132	TILT SUPPORT BRACKET
133	P0945133	ADJ HANDLE M8-1.25 X 30, 50L
135V2	P0945135V2	ADJ HANDLE M8-1.25 X 46, 50L V2.03.23
136	P0945136	FENCE SLIDE BRACKET
137	P0945137	FENCE SUPPORT BRACKET
138	P0945138	FLAT WASHER 6MM
139	P0945139	BUTTON HD CAP SCR M6-1 X 16
150	P0945150	COMPRESSION SPRING 1.2 X 10.6 X 15.5
160	P0945160	CUTTERHEAD ASSEMBLY
160-3	P0945160-3	BUTTON HD CAP SCR 1/4-20 X 5/8
160-4	P0945160-4	KNIFE CLAMP BAR
160-5	P0945160-5	JOINTER KNIFE 6-1/4" X 7/8" X 1/16" 2-PK
160-6	P0945160-6	SPACER 12ID X 16OD X 4L
160-7	P0945160-7	CUTTERHEAD 6" 2-KNIFE
160-8	P0945160-8	SET SCREW M6-1 X 10
160-9	P0945160-9	ADJUSTMENT SCREW M4-.7 X 10
167	P0945167	POWER CORD 18G 3W 72" 5-15P
300	P0945300	MOTOR 1-1/2HP 120V 1-PH
300-1	P0945300-1	CARBON BRUSH
300-2	P0945300-2	BRUSH HOLDER
300-3	P0945300-3	BRUSH COVER
323	P0945323	PADDLE SWITCH ASSEMBLY
323-1	P0945323-1	PADDLE SWITCH KEDU HY18 20A
323-2	P0945323-2	PADDLE SWITCH COVER

BUY PARTS ONLINE AT GRIZZLY.COM!
Scan QR code to visit our Parts Store.

G0946 Main

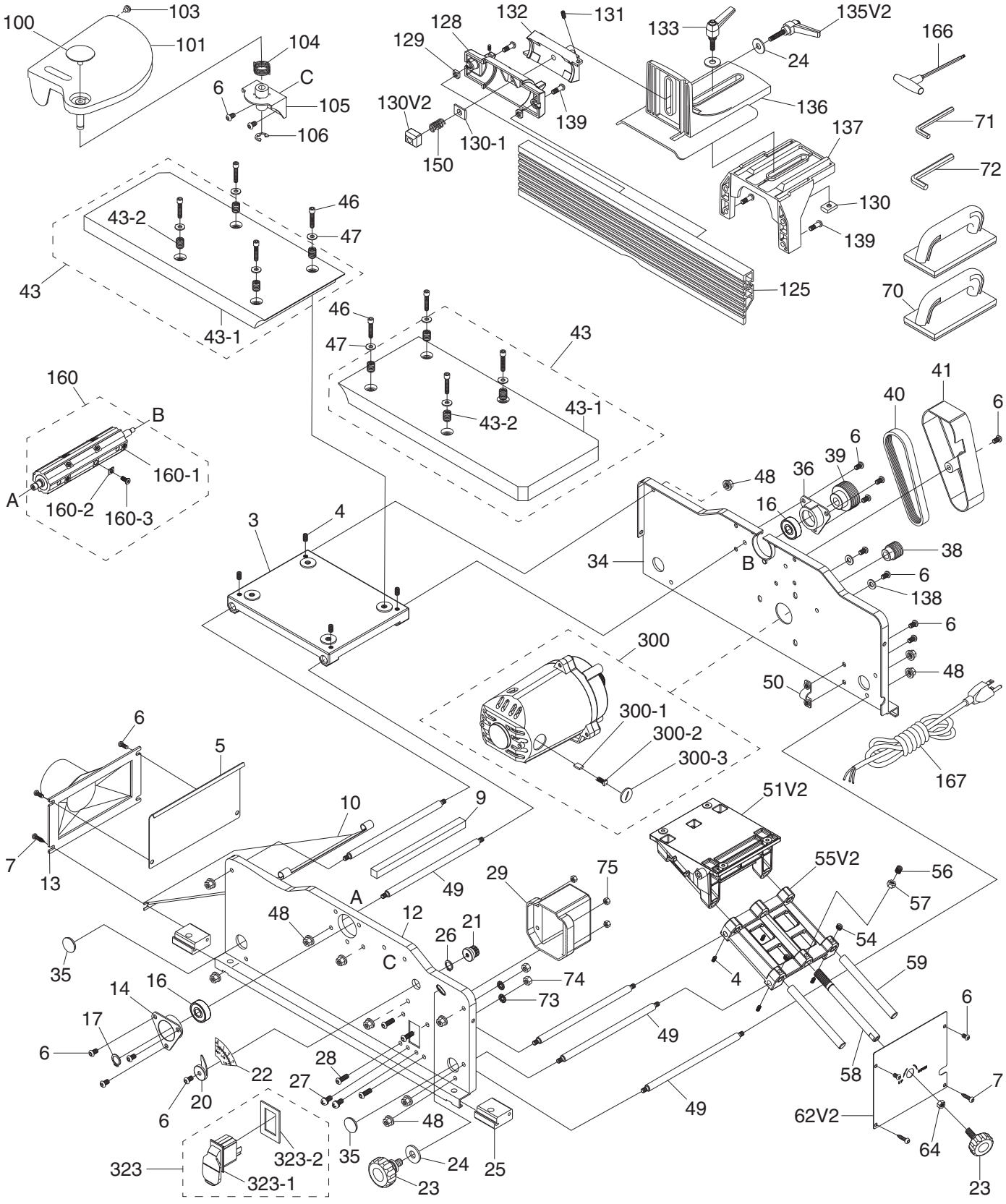

BUY PARTS ONLINE AT GRIZZLY.COM!
Scan QR code to visit our Parts Store.

G0946 Main Parts List

REF	PART #	DESCRIPTION
3	P0946003	OUTFEED TABLE SUPPORT
4	P0946004	SET SCREW M6-1 X 8
5	P0946005	DUST CHUTE COVER
6	P0946006	BUTTON HD CAP SCR M6-1 X 12
7	P0946007	TAP SCREW 1/4 X 5/8
9	P0946009	FOAM SEAL
10	P0946010	DUST CHUTE
12	P0946012	FRONT BASE PANEL
13	P0946013	DUST PORT 2-1/2"
14	P0946014	FRONT BEARING RETAINER
16	P0946016	BALL BEARING 6201ZZ
17	P0946017	EXT RETAINING RING 12MM
20	P0946020	SCALE POINTER
21	P0946021	SCALE GEAR
22	P0946022	SCALE PLATE
23	P0946023	KNOB BOLT M8-1.25 X 18, 12-LOBE, D49
24	P0946024	FENDER WASHER 8MM
25	P0946025	FOOT PAD
26	P0946026	EXT RETAINING RING 16MM
27	P0946027	PHLP HD SCR M5-.8 X 8
28	P0946028	BUTTON HD CAP SCR M5-.8 X 25
29	P0946029	PADDLE SWITCH BOX
34	P0946034	REAR BASE PANEL
35	P0946035	ROUND PLUG 35MM
36	P0946036	REAR BEARING RETAINER
38	P0946038	MOTOR PULLEY
39	P0946039	CUTTERHEAD PULLEY
40	P0946040	POLY-V BELT 125J5
41	P0946041	BELT COVER
43	P0946043	TABLE ASSEMBLY
43-1	P0946043-1	TABLE
43-2	P0946043-2	SET SCREW M12-1.25 X 15 HOLE-PT, SLOT
46	P0946046	CAP SCREW TORX M6-1 X 30
47	P0946047	FENDER WASHER 6MM
48	P0946048	FLANGE NUT M6-1
49	P0946049	STUD-DE M6-1 X 100, 12
50	P0946050	POWER CORD CLAMP
51V2	P0946051V2	INFEED TABLE SUPPORT V2.03.23
54	P0946054	SET SCREW M6-1 X 10
55V2	P0946055V2	SUPPORT BRACKET V2.03.23
56	P0946056	SET SCREW M6-1 X 16 DOG-PT
57	P0946057	HEX NUT M6-1
58	P0946058	ADJUSTMENT ROD
59	P0946059	ADJUSTMENT SHAFT

REF	PART #	DESCRIPTION
62V2	P0946062V2	RIGHT BASE PANEL V2.03.23
64	P0946064	HEX NUT M8-1.25
70	P0946070	PUSH BLOCK
71	P0946071	HEX WRENCH 2.5MM
72	P0946072	HEX WRENCH 4MM
73	P0946073	EXT TOOTH WASHER 5MM
74	P0946074	HEX NUT M5-.8
75	P0946075	LOCK NUT M5-.8
100	P0946100	ROUND PLUG 42MM
101	P0946101	CUTTERHEAD GUARD
103	P0946103	RUBBER BUMPER
104	P0946104	TORSION SPRING 1.6 X 23MM
105	P0946105	GUARD MOUNTING BRACKET
106	P0946106	E-CLIP 10MM
125	P0946125	FENCE
128	P0946128	TILT BRACKET
129	P0946129	T-SLOT NUT 7, M6-1
130	P0946130	SQUARE NUT M8-1.25 V1
130V2	P0946130V2	TAPERED SQUARE NUT M8-1.25 V2.03.23
130-1	P0946130-1	CURVED SQUARE WASHER 8MM
131	P0946131	SET SCREW M5-.8 X 8
132	P0946132	TILT SUPPORT BRACKET
133	P0946133	ADJ HANDLE M8-1.25 X 30, 50L
135V2	P0946135V2	ADJ HANDLE M8-1.25 X 46, 50L V2.03.23
136	P0946136	FENCE SLIDE BRACKET
137	P0946137	FENCE SUPPORT BRACKET
138	P0946138	FLAT WASHER 6MM
139	P0946139	BUTTON HD CAP SCR M6-1 X 16
150	P0946150	COMPRESSION SPRING 1.2 X 10.6 X 15.5
160	P0946160	CUTTERHEAD ASSEMBLY
160-1	P0946160-1	SPIRAL CUTTERHEAD 6"
160-2	P0946160-2	CARBIDE INSERT 14 X 14 X 2
160-3	P0946160-3	FLAT HD TORX T25 M5-.8 X 16
166	P0946166	T-HANDLE TORX DRIVER T-25
167	P0946167	POWER CORD 18G 3W 72" 5-15P
300	P0946300	MOTOR 1-1/2HP 120V 1-PH
300-1	P0946300-1	CARBON BRUSH
300-2	P0946300-2	BRUSH HOLDER
300-3	P0946300-3	BRUSH COVER
323	P0946323	PADDLE SWITCH ASSEMBLY
323-1	P0946323-1	PADDLE SWITCH KEDU HY18 20A
323-2	P0946323-2	PADDLE SWITCH COVER
323-3	P0946323-3	PADDLE SWITCH KEY

BUY PARTS ONLINE AT GRIZZLY.COM!
Scan QR code to visit our Parts Store.

G0947 Main

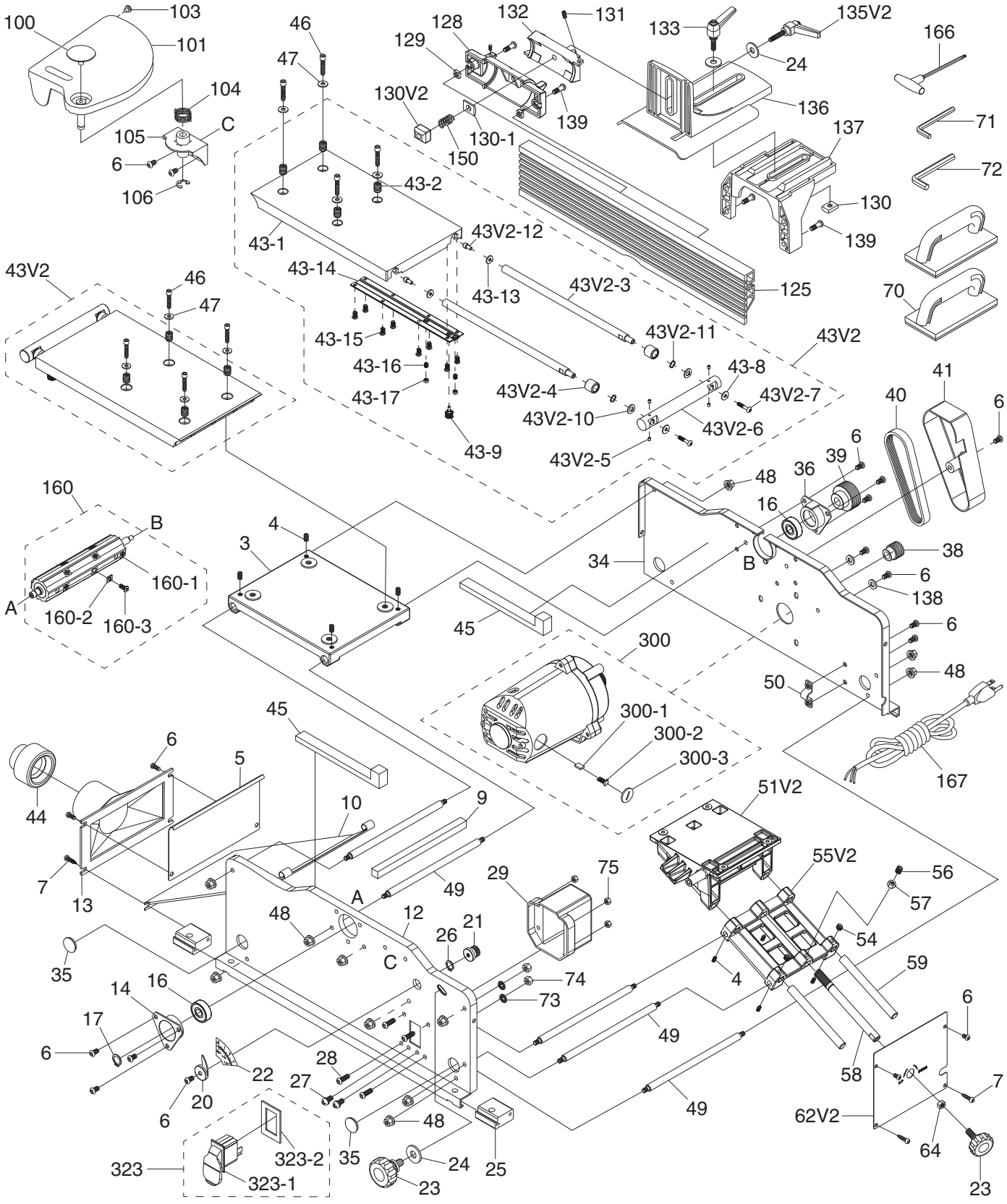

BUY PARTS ONLINE AT GRIZZLY.COM!
Scan QR code to visit our Parts Store.

G0947 Main Parts List

REF	PART #	DESCRIPTION
3	P0947003	OUTFEED TABLE SUPPORT
4	P0947004	SET SCREW M6-1 X 8
5	P0947005	DUST CHUTE COVER
6	P0947006	BUTTON HD CAP SCR M6-1 X 12
7	P0947007	TAP SCREW 1/4 X 5/8
9	P0947009	FOAM SEAL
10	P0947010	DUST CHUTE
12	P0947012	FRONT BASE PANEL
13	P0947013	DUST PORT 4"
14	P0947014	FRONT BEARING RETAINER
16	P0947016	BALL BEARING 6201ZZ
17	P0947017	EXT RETAINING RING 12MM
20	P0947020	SCALE POINTER
21	P0947021	SCALE GEAR
22	P0947022	SCALE PLATE
23	P0947023	KNOB BOLT M8-1.25 X 18, 12-LOBE, D49
24	P0947024	FENDER WASHER 8MM
25	P0947025	FOOT PAD
26	P0947026	EXT RETAINING RING 16MM
27	P0947027	PHLP HD SCR M5-.8 X 8
28	P0947028	BUTTON HD CAP SCR M5-.8 X 25
29	P0947029	PADDLE SWITCH BOX
34	P0947034	REAR BASE PANEL
35	P0947035	ROUND PLUG 35MM
36	P0947036	REAR BEARING RETAINER
38	P0947038	MOTOR PULLEY
39	P0947039	CUTTERHEAD PULLEY
40	P0947040	POLY-V BELT 125J5
41	P0947041	BELT COVER
43V2	P0947043V2	TABLE ASSEMBLY V2.03.23
43-1	P0947043-1	TABLE
43-2	P0947043-2	SET SCREW M12-1.25 X 15 HOLE-PT, SLOT
43V2-3	P0947043V2-3	EXTENSION ROD
43V2-4	P0947043V2-4	LEVELING COLLAR
43V2-5	P0947043V2-5	SET SCREW M5-.8 X 6
43V2-6	P0947043V2-6	EXTENSION HANDLE
43V2-7	P0947043V2-7	BUTTON HD CAP SCR M6-1 X 30
43-8	P0947043-8	FENDER WASHER 6MM
43-9	P0947043-9	KNOB BOLT M5-.8 X 10, D16, ROUND KD
43V2-10	P0947043V2-10	FLAT WASHER 10MM
43V2-11	P0947043V2-11	WAVY WASHER 10.5 X 14.5 X 0.3MM
43V2-12	P0947043V2-12	CAP SCREW M6-1 X 12
43-13	P0947043-13	FLAT WASHER 6MM
43-14	P0947043-14	EXTENSION ROD GUARD
43-15	P0947043-15	BUTTON HD CAP SCR M5-.8 X 10
43-16	P0947043-16	SET SCREW M5-.8 X 10 KNURLED-PT, SLOT
43-17	P0947043-17	HEX NUT M5-.8
44	P0947044	DUST PORT ADAPTOR 2-1/2"
45	P0947045	FOAM SEAL
46	P0947046	CAP SCREW TORX M6-1 X 30
47	P0947047	FENDER WASHER 6MM
48	P0947048	FLANGE NUT M6-1

REF	PART #	DESCRIPTION
49	P0947049	STUD-DE M6-1 X 150, 12
50	P0947050	POWER CORD CLAMP
51V2	P0947051V2	INFEED TABLE SUPPORT V2.03.23
54	P0947054	SET SCREW M6-1 X 10
55V2	P0947055V2	SUPPORT BRACKET V2.03.23
56	P0947056	SET SCREW M6-1 X 16 DOG-PT
57	P0947057	HEX NUT M6-1
58	P0947058	ADJUSTMENT ROD
59	P0947059	ADJUSTMENT SHAFT
62V2	P0947062V2	RIGHT BASE PANEL V2.03.23
64	P0947064	HEX NUT M8-1.25
70	P0947070	PUSH BLOCK
71	P0947071	HEX WRENCH 2.5MM
72	P0947072	HEX WRENCH 4MM
73	P0947073	EXT TOOTH WASHER 5MM
74	P0947074	HEX NUT M5-.8
75	P0947075	LOCK NUT M5-.8
100	P0947100	ROUND PLUG 42MM
101	P0947101	CUTTERHEAD GUARD
103	P0947103	RUBBER BUMPER
104	P0947104	TORSION SPRING 1.6 X 23MM
105	P0947105	GUARD MOUNTING BRACKET
3	P0947003	OUTFEED TABLE SUPPORT
125	P0947125	FENCE
128	P0947128	TILT BRACKET
129	P0947129	T-SLOT NUT 7, M6-1
130	P0947130	SQUARE NUT M8-1.25 V1
130V2	P0947130V2	TAPERED SQUARE NUT M8-1.25 V2.03.23
130-1	P0947130-1	CURVED SQUARE WASHER 8MM
131	P0947131	SET SCREW M5-.8 X 8
132	P0947132	TILT SUPPORT BRACKET
133	P0947133	ADJ HANDLE M8-1.25 X 30, 50L
135V2	P0947135V2	ADJ HANDLE M8-1.25 X 46, 50L V2.03.23
136	P0947136	FENCE SLIDE BRACKET
137	P0947137	FENCE SUPPORT BRACKET
138	P0947138	FLAT WASHER 6MM
139	P0947139	BUTTON HD CAP SCR M6-1 X 16
150	P0947150	COMPRESSION SPRING 1.2 X 10.6 X 15.5
160	P0947160	CUTTERHEAD ASSEMBLY
160-1	P0947160-1	SPIRAL CUTTERHEAD 8"
160-2	P0947160-2	CARBIDE INSERT 14 X 14 X 2
160-3	P0947160-3	FLAT HD TORX T25 M5-.8 X 16
166	P0947166	T-HANDLE TORX DRIVER T-25
167	P0947167	POWER CORD 18G 3W 72" 5-15P
300	P0947300	MOTOR 1-1/2HP 120V 1-PH
300-1	P0947300-1	CARBON BRUSH
300-2	P0947300-2	BRUSH HOLDER
300-3	P0947300-3	BRUSH COVER
323	P0947323	PADDLE SWITCH ASSEMBLY
323-1	P0947323-1	PADDLE SWITCH KEDU HY18 20A
323-2	P0947323-2	PADDLE SWITCH COVER

BUY PARTS ONLINE AT GRIZZLY.COM!
Scan QR code to visit our Parts Store.

Labels & Cosmetics

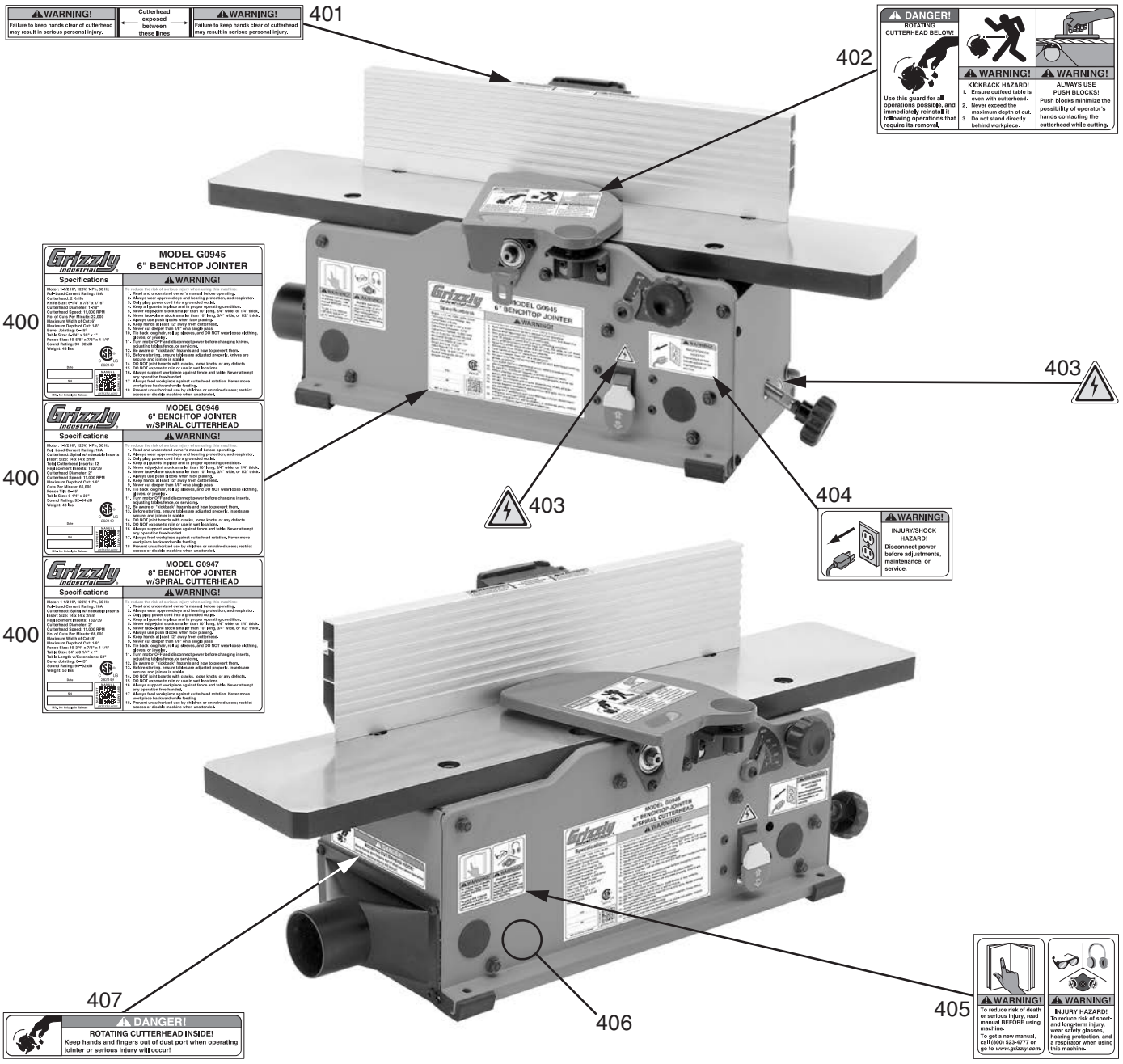

REF	PART #	DESCRIPTION
400	P0945400	MACHINE ID LABEL (G0945)
400	P0946400	MACHINE ID LABEL (G0946)
400	P0947400	MACHINE ID LABEL (G0947)
401	P0945401	CUTTERHEAD EXPOSURE LABEL
402	P0945402	CUTTERHEAD GUARD LABEL

REF	PART #	DESCRIPTION
403	P0945403	ELECTRICITY LABEL
404	P0945404	DISCONNECT 110V LABEL
405	P0945405	COMBO WARNING LABEL
406	P0945406	TOUCH-UP PAINT, GRIZZLY GREEN
407	P0945407	CUTTERHEAD WARNING LABEL

⚠WARNING

Safety labels help reduce the risk of serious injury caused by machine hazards. If any label comes off or becomes unreadable, the owner of this machine MUST replace it in the original location before resuming operations. For replacements, contact (800) 523-4777 or www.grizzly.com.

WARRANTY & RETURNS

Grizzly Industrial, Inc. warrants every product it sells for a period of **1 year** to the original purchaser from the date of purchase. This warranty does not apply to defects due directly or indirectly to misuse, abuse, negligence, accidents, repairs or alterations or lack of maintenance. This is Grizzly's sole written warranty and any and all warranties that may be implied by law, including any merchantability or fitness, for any particular purpose, are hereby limited to the duration of this written warranty. We do not warrant or represent that the merchandise complies with the provisions of any law or acts unless the manufacturer so warrants. In no event shall Grizzly's liability under this warranty exceed the purchase price paid for the product and any legal actions brought against Grizzly shall be tried in the State of Washington, County of Whatcom.

We shall in no event be liable for death, injuries to persons or property or for incidental, contingent, special, or consequential damages arising from the use of our products.

The manufacturers reserve the right to change specifications at any time because they constantly strive to achieve better quality equipment. We make every effort to ensure that our products meet high quality and durability standards and we hope you never need to use this warranty.

In the event you need to use this warranty, contact us by mail or phone and give us all the details. We will then issue you a "Return Number," which must be clearly posted on the outside as well as the inside of the carton. We will not accept any item back without this number. Proof of purchase must accompany the merchandise.

Please feel free to write or call us if you have any questions about the machine or the manual.

Thank you again for your business and continued support. We hope to serve you again soon.

To take advantage of this warranty, you must register it at **https://www.grizzly.com/forms/warranty**, or you can scan the QR code below to be automatically directed to our warranty registration page. Enter all applicable information for the product.

WARRANTY

grizzly.com

grizzly.com®

TOOL WEBSITE

Buy Direct and Save with Grizzly® – Trusted, Proven and a Great Value!

~Since 1983~

Visit Our Website Today For Current Specials!

ORDER

24 HOURS A DAY!

1-800-523-4777

