SECTION 9: PARTS

We do our best to stock replacement parts when possible, but we cannot guarantee that all parts shown are available for purchase. Call **(800) 523-4777** or visit **www.grizzly.com/parts** to check for availability.

Main

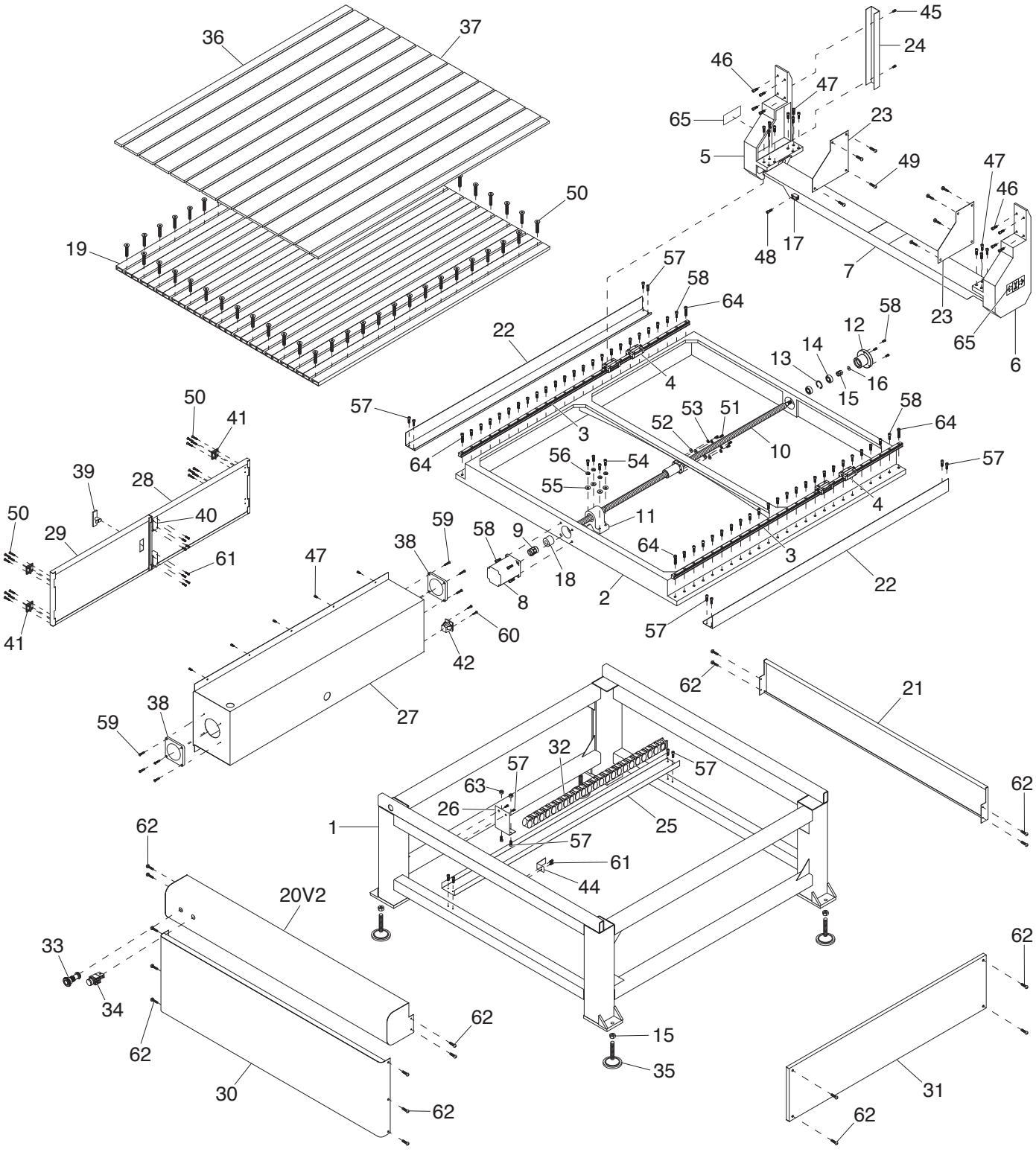

BUY PARTS ONLINE AT GRIZZLY.COM!
Scan QR code to visit our Parts Store.

Main Parts List

REF	PART #	DESCRIPTION
1	P0931001	MACHINE BODY
2	P0931002	BED FRAME
3	P0931003	LINEAR GUIDEWAY PMI MSA20-1470
4	P0931004	GUIDEWAY CARRIAGE MSA20A
5	P0931005	GANTRY SUPPORT COLUMN LEFT
6	P0931006	GANTRY SUPPORT COLUMN RIGHT
7	P0931007	GANTRY SUPPORT BRACKET
8	P0931008	STEPPER MOTOR 86HB76-14
9	P0931009	FLEXIBLE SHAFT COUPLER 14 X 15MM
10	P0931010	BALL SCREW TBI SFU2510-1420
11	P0931011	BALL SCREW NUT
12	P0931012	BALL SCREW BEARING NUT
13	P0931013	INT RETAINING RING 22MM
14	P0931014	BALL BEARING 6202ZZ
15	P0931015	HEX NUT M16-2
16	P0931016	FLAT WASHER 16MM SS
17	P0931017	PROXIMITY SWITCH OMRON TL-Q5MCI-Z
18	P0931018	LIMIT BUSHING
19	P0931019	ROUTER BED
20V2	P0931020V2	FRONT COVER V2.07.21
21	P0931021	REAR COVER
22	P0931022	DUST COVER
23	P0931023	COLUMN GUARD
24	P0931024	CABLE COVER
25	P0931025	CABLE CARRIER TRACK
26	P0931026	CABLE CARRIER MOUNT
27	P0931027	ELECTRICAL CABINET
28	P0931028	ELECTRICAL CABINET DOOR LEFT
29	P0931029	ELECTRICAL CABINET DOOR RIGHT
30	P0931030	FRONT GUARD COVER
31	P0931031	SIDE GUARD COVER
32	P0931032	CABLE CARRIER

REF	PART #	DESCRIPTION
33	P0931033	E-STOP BUTTON YJ139-XB2 30MM
34	P0931034	ON BUTTON YJ139-LA38 30MM GRN
35	P0931035	LEVELING FOOT
36	P0931036	NARROW TABLE SLAT
37	P0931037	WIDE TABLE SLAT
38	P0931038	ELECTRICAL FAN COVER
39	P0931039	SWING-HANDLE DOOR LOCK
40	P0931040	SPRING-LOADED SLIDE-BOLT LATCH
41	P0931041	DOOR HINGE
42	P0931042	POWER RECEPTACLE 250V IEC C14
44	P0931044	PROXIMITY SWITCH BRACKET
45	P0931045	SHOULDER SCREW M6-1 X 24, 6 X 24
46	P0931046	CAP SCREW M8-1.25 X 28
47	P0931047	CAP SCREW M6-1 X 20
48	P0931048	CAP SCREW M4-.7 X 25
49	P0931049	BUTTON HD CAP SCR M5-.8 X 10
50	P0931050	FLAT HD CAP SCR M5-.8 X 12
51	P0931051	CAP SCREW M6-1 X 30
52	P0931052	FLAT WASHER 6MM
53	P0931053	LOCK WASHER 6MM
54	P0931054	CAP SCREW M8-1.25 X 34
55	P0931055	FLAT WASHER 8MM
56	P0931056	LOCK WASHER 8MM
57	P0931057	CAP SCREW M5-.8 X 10
58	P0931058	CAP SCREW M5-.8 X 20
59	P0931059	FLAT HD SCR M5-.8 X 10
60	P0931060	PHLP HD SCR M4-.7 X 10
61	P0931061	CAP SCREW M4-.7 X 10
62	P0931062	BUTTON HD CAP SCR M5-.8 X 8
63	P0931063	HEX NUT M5-.8
64	P0931064	CAP SCREW M8-1.25 X 35
65	P0931065	Y-AXIS MOVEMENT LABEL

BUY PARTS ONLINE AT GRIZZLY.COM!
Scan QR code to visit our Parts Store.

Gantry & Spindle

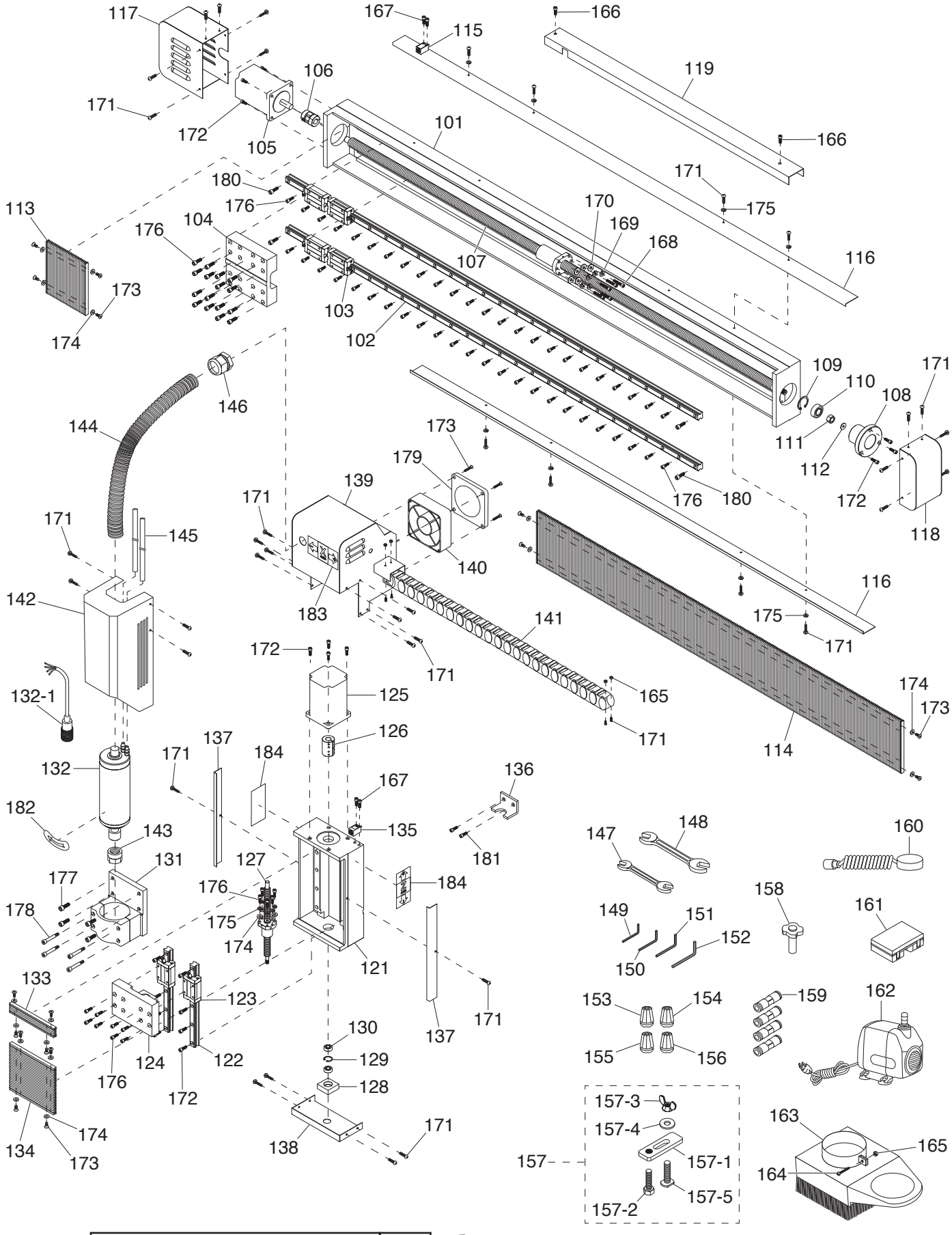

BUY PARTS ONLINE AT GRIZZLY.COM!
Scan QR code to visit our Parts Store.

Gantry & Spindle Parts List

REF	PART #	DESCRIPTION
101	P0931101	GANTRY BODY
102	P0931102	LINEAR GUIDEWAY PMI MSA20-1520
103	P0931103	GUIDEWAY CARRIAGE MSA20S
104	P0931104	SPINDLE HEAD MOUNT
105	P0931105	STEPPER MOTOR 86HB76-14
106	P0931106	FLEXIBLE SHAFT COUPLER 14 X 15MM
107	P0931107	BALL SCREW TBI SFU2519-1620
108	P0931108	BALL SCREW BEARING NUT
109	P0931109	INT RETAINING RING 22MM
110	P0931110	BALL BEARING 6202ZZ
111	P0931111	HEX NUT M16-2
112	P0931112	FLAT WASHER 16MM SS
113	P0931113	GANTRY DUST COVER LEFT
114	P0931114	GANTRY DUST COVER RIGHT
115	P0931115	PROXIMITY SWITCH OMRON TL-Q5MCI-Z
116	P0931116	DUST COVER BAFFLE
117	P0931117	STEPPER MOTOR COVER LEFT
118	P0931118	STEPPER MOTOR COVER RIGHT
119	P0931119	CABLE GUARD
121	P0931121	SPINDLE HEAD BODY
122	P0931122	LINEAR GUIDEWAY PMI MSA20-260
123	P0931123	GUIDEWAY CARRIAGE MSA20S
124	P0931124	SPINDLE MOTOR MOUNT
125	P0931125	STEPPER MOTOR 86HB76-14
126	P0931126	RIGID SHAFT COUPLING 10 X 14MM
127	P0931127	BALL SCREW TBI SFU1605-262
128	P0931128	BALL SCREW BEARING NUT
129	P0931129	INT RETAINING RING 22MM
130	P0931130	BALL BEARING 608ZZ
131	P0931131	SPINDLE HOLDER 80MM
132	P0931132	SPINDLE MOTOR 3HP 220V 3-PH
132-1	P0931132-1	SPINDLE POWER CABLE
133	P0931133	SPINDLE DUST COVER UPPER
134	P0931134	SPINDLE DUST COVER LOWER
135	P0931135	PROXIMITY SWITCH OMRON TL-Q5MCI-Z
136	P0931136	PROXIMITY SWITCH BRACKET
137	P0931137	SPINDLE DUST COVER BAFFLE
138	P0931138	PROTECTIVE COVER LOWER
139	P0931139	PROTECTIVE COVER UPPER
140	P0931140	ELECTRICAL COOLING FAN DP200A
141	P0931141	CABLE CARRIER
142	P0931142	SPINDLE COVER
143	P0931143	SPINDLE NUT
144	P0931144	CABLE CONDUIT
145	P0931145	COOLANT TUBE 6MM ID X 8MM OD

REF	PART #	DESCRIPTION
146	P0931146	STRAIN RELIEF TYPE-3 PG31
147	P0931147	WRENCH 18 X 21MM OPEN-ENDS
148	P0931148	WRENCH 27 X 30MM OPEN-ENDS
149	P0931149	HEX WRENCH 3MM
150	P0931150	HEX WRENCH 4MM
151	P0931151	HEX WRENCH 5MM
152	P0931152	HEX WRENCH 6MM
153	P0931153	COLLET ER20 1/8
154	P0931154	COLLET ER20 1/2
155	P0931155	COLLET ER20 4MM
156	P0931156	COLLET ER20 6MM
157	P0931157	HOLD-DOWN CLAMP
157-1	P0931157-1	CLAMP PLATE
157-2	P0931157-2	HEX BOLT M8-1.25 X 50
157-3	P0931157-3	WING NUT M8-1.25
157-4	P0931157-4	FLAT WASHER 8MM
157-5	P0931157-5	T-BOLT M8-1.25 X 80
158	P0931158	SPOILBOARD CUTTER 6 X 22MM
159	P0931159	QUICK-DISCONNECT TUBE COUPLING 8MM
160	P0931160	Z-AXIS TOOL SETTER
161	P0931161	ENGRAVING BITS 1/8" (10 PC)
162	P0931162	COOLANT PUMP WY-4500 100W
163	P0931163	DUST SHOE
164	P0931164	CAP SCREW M5-.8 X 45
165	P0931165	HEX NUT M5-.8
166	P0931166	CAP SCREW M6-1 X 35
167	P0931167	CAP SCREW M4-.7 X 25
168	P0931168	CAP SCREW M6-1 X 30
169	P0931169	LOCK WASHER 6MM
170	P0931170	FLAT WASHER 6MM
171	P0931171	BUTTON HD CAP SCR M5-.8 X 10
172	P0931172	CAP SCREW M5-.8 X 20
173	P0931173	FLAT HD CAP SCR M5-.8 X 6
174	P0931174	FLAT WASHER 5MM
175	P0931175	LOCK WASHER 5MM
176	P0931176	CAP SCREW M5-.8 X 25
177	P0931177	CAP SCREW M8-1.25 X 20
178	P0931178	SHOULDER SCREW M6-1 X 24, 6 X 14
179	P0931179	ELECTRICAL FAN COVER
180	P0931180	CAP SCREW M8-1.25 X 35
181	P0931181	CAP SCREW M5-.8 X 10
182	P0931182	SPINDLE DIRECTION LABEL
183	P0931183	X-AXIS MOVEMENT LABEL
184	P0931184	Z-AXIS MOVEMENT LABEL

BUY PARTS ONLINE AT GRIZZLY.COM!
Scan QR code to visit our Parts Store.

Electrical Cabinet Components

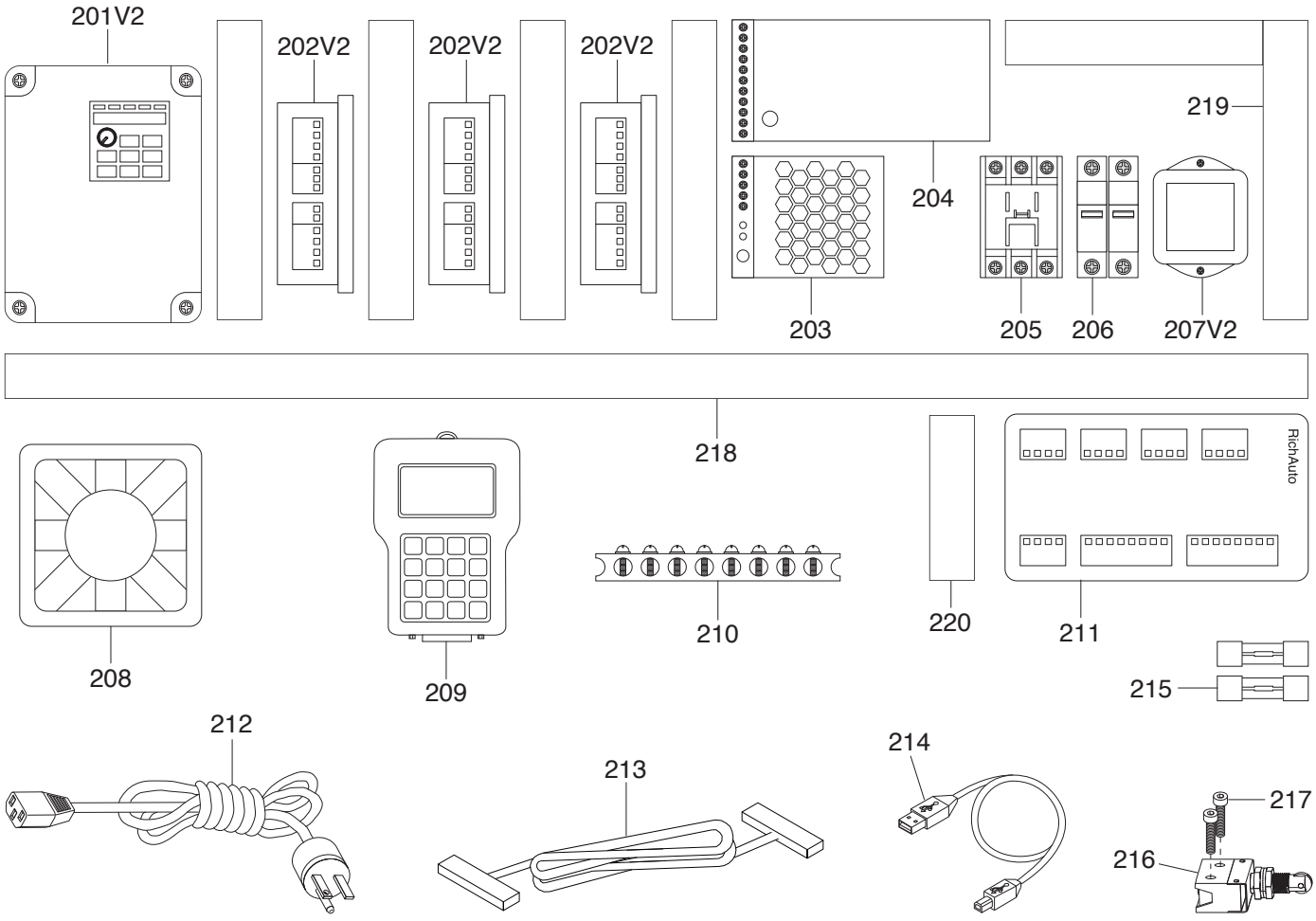

REF	PART #	DESCRIPTION
201V2	P0931201V2	VFD FOLINN BD612-2R2-2-DK V2.11.23
202V2	P0931202V2	STEPPER DRIVER LS DM542-05 V2.05.24
203	P0931203	24V DC POWER SUPPLY MEANWELL LRS-75-24
204	P0931204	40V AC POWER SUPPLY GY400W-40-A
205	P0931205	CONTACTOR CHINT NXC-18 220V
206	P0931206	FUSE HOLDER YHDA RT18-32X
207V2	P0931207V2	EMI FILTER MT4L2-20A-S V2.11.23
208	P0931208	ELECTRICAL COOLING FAN DP200A
209	P0931209	DSP CONTROLLER RICHAUTO A11E
210	P0931210	TERMINAL BAR 8P M4-.7 X 12

REF	PART #	DESCRIPTION
211	P0931211	INTERFACE BOARD RICHAUTO A1X/B1X
212	P0931212	POWER CORD 14G 3W 72" 6-15P
213	P0931213	50 PIN CABLE 26G 50W 72"
214	P0931214	USB-B CABLE 28G 4W 36"
215	P0931215	FUSE 10A 500V 10MM TIME-DELAY, CERAMIC
216	P0931216	LIMIT SWITCH PANASONIC AZ-7311
217	P0931217	CAP SCREW M4-.7 X 30
218	P0931218	WIRE LOOM 50 X 1220MM
219	P0931219	WIRE LOOM 50 X 220MM
220	P0931220	WIRE LOOM 50 X 160MM

BUY PARTS ONLINE AT GRIZZLY.COM!
Scan QR code to visit our Parts Store.

Labels & Cosmetics

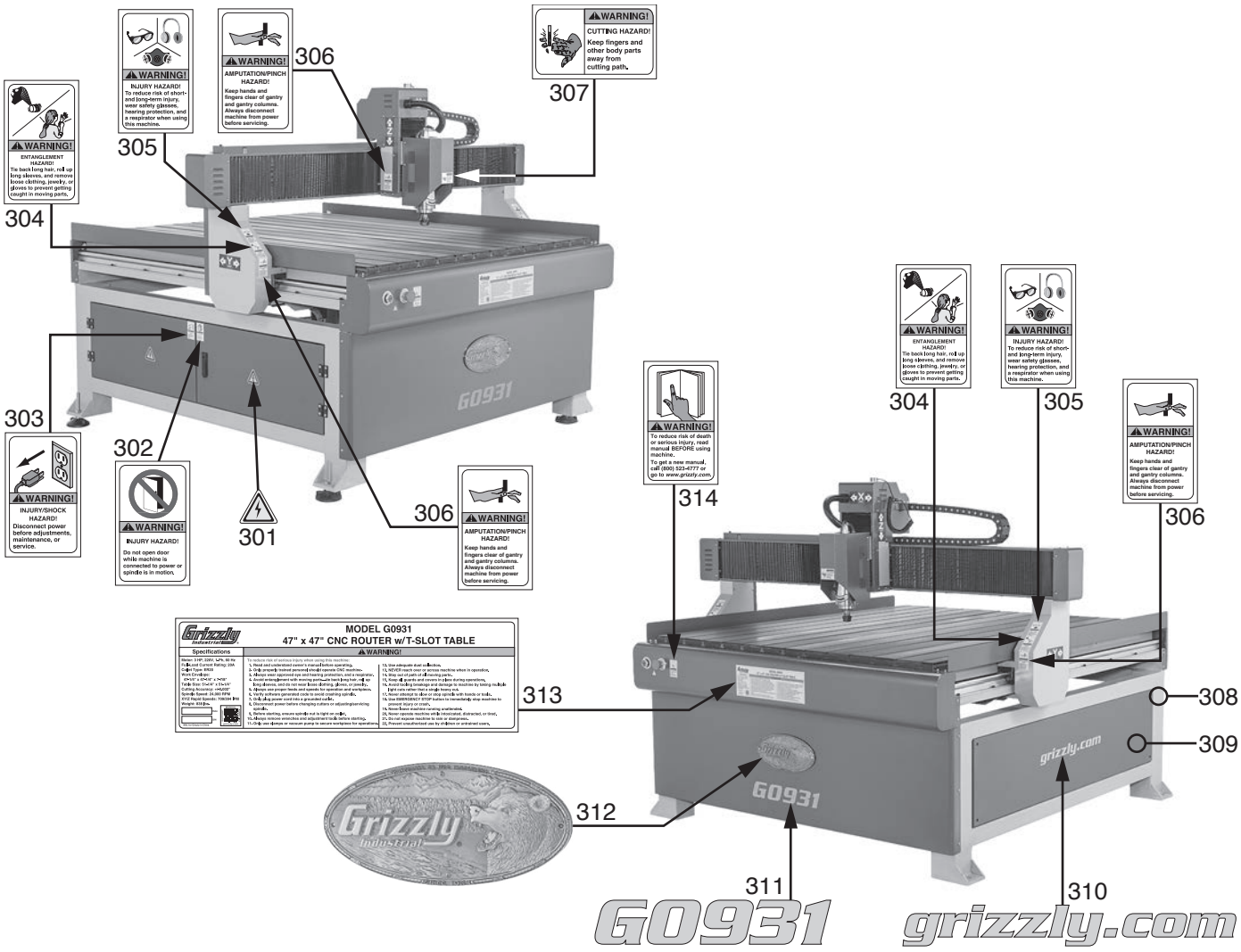

REF	PART #	DESCRIPTION
301	P0931301	ELECTRICITY HAZARD LABEL
302	P0931302	DO NOT OPEN DOOR CNC LABEL
303	P0931303	DISCONNECT 220V LABEL
304	P0931304	ENTANGLEMENT HAZARD LABEL
305	P0931305	EYE EAR LUNG HAZARD LABEL
306	P0931306	AMPUTATION HAZARD CNC LABEL
307	P0931307	CUTTING HAZARD CNC LABEL

REF	PART #	DESCRIPTION
308	P0931308	TOUCH-UP PAINT, GRIZZLY BEIGE
309	P0931309	TOUCH-UP PAINT, GRIZZLY GREEN
310	P0931310	GRIZZLY.COM LABEL
311	P0931311	MODEL NUMBER LABEL
312	P0931312	GRIZZLY NAMEPLATE, LARGE
313	P0931313	MACHINE ID LABEL
314	P0931314	READ MANUAL LABEL

⚠WARNING

Safety labels help reduce the risk of serious injury caused by machine hazards. If any label comes off or becomes unreadable, the owner of this machine MUST replace it in the original location before resuming operations. For replacements, contact (800) 523-4777 or www.grizzly.com.

BUY PARTS ONLINE AT GRIZZLY.COM!
Scan QR code to visit our Parts Store.