MODEL G0931
47" X 47" CNC ROUTER w/T-SLOT TABLE
OWNER'S MANUAL
(For models manufactured since 10/24)



COPYRIGHT © APRIL, 2022 BY GRIZZLY INDUSTRIAL, INC., REVISED JULY, 2025 (KS)
WARNING: NO PORTION OF THIS MANUAL MAY BE REPRODUCED IN ANY SHAPE OR FORM WITHOUT THE WRITTEN APPROVAL OF GRIZZLY INDUSTRIAL, INC.
#KS22105 PRINTED IN CHINA
V2.07.25

******Keep for Future Reference******

⚠ WARNING!

This manual provides critical safety instructions on the proper setup, operation, maintenance, and service of this machine/tool. Save this document, refer to it often, and use it to instruct other operators.

Failure to read, understand and follow the instructions in this manual may result in fire or serious personal injury—including amputation, electrocution, or death.

The owner of this machine/tool is solely responsible for its safe use. This responsibility includes but is not limited to proper installation in a safe environment, personnel training and usage authorization, proper inspection and maintenance, manual availability and comprehension, application of safety devices, cutting/sanding/grinding tool integrity, and the usage of personal protective equipment.

The manufacturer will not be held liable for injury or property damage from negligence, improper training, machine modifications or misuse.

⚠ WARNING!

Some dust created by power sanding, sawing, grinding, drilling, and other construction activities contains chemicals known to the State of California to cause cancer, birth defects or other reproductive harm. Some examples of these chemicals are:

- **Lead from lead-based paints.**
- **Crystalline silica from bricks, cement and other masonry products.**
- **Arsenic and chromium from chemically-treated lumber.**

Your risk from these exposures varies, depending on how often you do this type of work. To reduce your exposure to these chemicals: Work in a well ventilated area, and work with approved safety equipment, such as those dust masks that are specially designed to filter out microscopic particles.

Table of Contents

INTRODUCTION 2
- Contact Info 2
- Manual Accuracy 2
- Identification 3
- Controls & Components 4
- Controller Functions 5
- Glossary Of Terms 6
- Machine Data Sheet 8

SECTION 1: SAFETY 10
- Safety Instructions for Machinery 10
- Additional Safety for CNC Routers 12

SECTION 2: POWER SUPPLY 13

SECTION 3: SETUP 15
- Needed for Setup 15
- Unpacking 15
- Inventory 16
- Site Considerations 17
- Lifting & Placing 18
- Leveling 18
- Connecting Cooling Pump 19
- Connecting Controller 20
- Dust Collection 21
- Test Run 22
- Verifying Parameters 23

SECTION 4: OPERATIONS 25
- Operation Overview 25
- Workpiece Inspection 26
- Choosing Cutter 26
- Changing Cutter 27
- Clamping Workpiece 28
- Using a Spoilboard 28
- Adjusting Axis Positions Manually 29
- Homing Axes 30
- Setting Origin 30
- Creating G-Code File 31
- Uploading & Running G-Code 32
- Changing Advanced Settings 33
- Using Advanced Controls 34
- Manually Setting Spindle Speed 34

SECTION 5: ACCESSORIES 35

SECTION 6: MAINTENANCE 38
- Schedule 38
- Cleaning & Protecting 38
- Lubrication 38
- Coolant 41

SECTION 7: SERVICE 42
- Troubleshooting 42
- Testing Limit Switches 45
- Updating RichAuto Controller Software 46
- Setting Stepper Driver DIP Switches 47

SECTION 8: WIRING 48
- Wiring Safety Instructions 48
- Spindle Wiring Diagram 49
- Axis Motor Wiring Diagram 50
- Contactor Wiring Diagram 51
- Interface Board Wiring Diagram 52
- Electrical Components 53

SECTION 9: PARTS 54
- Main 54
- Gantry & Spindle 56
- Electrical Cabinet Components 58
- Labels & Cosmetics 59

WARRANTY & RETURNS 61

INTRODUCTION

Contact Info

We stand behind our machines! If you have questions or need help, contact us with the information below. Before contacting, make sure you get the **serial number** and **manufacture date** from the machine ID label. This will help us help you faster.

Grizzly Technical Support
1815 W. Battlefield
Springfield, MO 65807
Phone: (570) 546-9663
Email: techsupport@grizzly.com

We want your feedback on this manual. What did you like about it? Where could it be improved? Please take a few minutes to give us feedback.

Grizzly Documentation Manager
P.O. Box 2069
Bellingham, WA 98227-2069
Email: manuals@grizzly.com

Manual Accuracy

We are proud to provide a high-quality owner's manual with your new machine!

We made every effort to be exact with the instructions, specifications, drawings, and photographs in this manual. Sometimes we make mistakes, but our policy of continuous improvement also means that **sometimes the machine you receive is slightly different than shown in the manual**.

If you find this to be the case, and the difference between the manual and machine leaves you confused or unsure about something, check our website for an updated version. We post current manuals and manual updates for free on our website at **www.grizzly.com**.

Alternatively, you can call our Technical Support for help. Before calling, make sure you write down the **manufacture date** and **serial number** from the machine ID label (see below). This information is required for us to provide proper tech support, and it helps us determine if updated documentation is available for your machine.

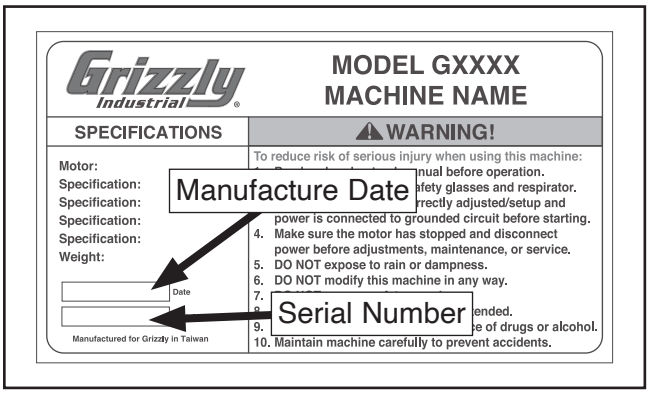

Identification

Become familiar with the names and locations of the controls and features shown below to better understand the instructions in this manual.

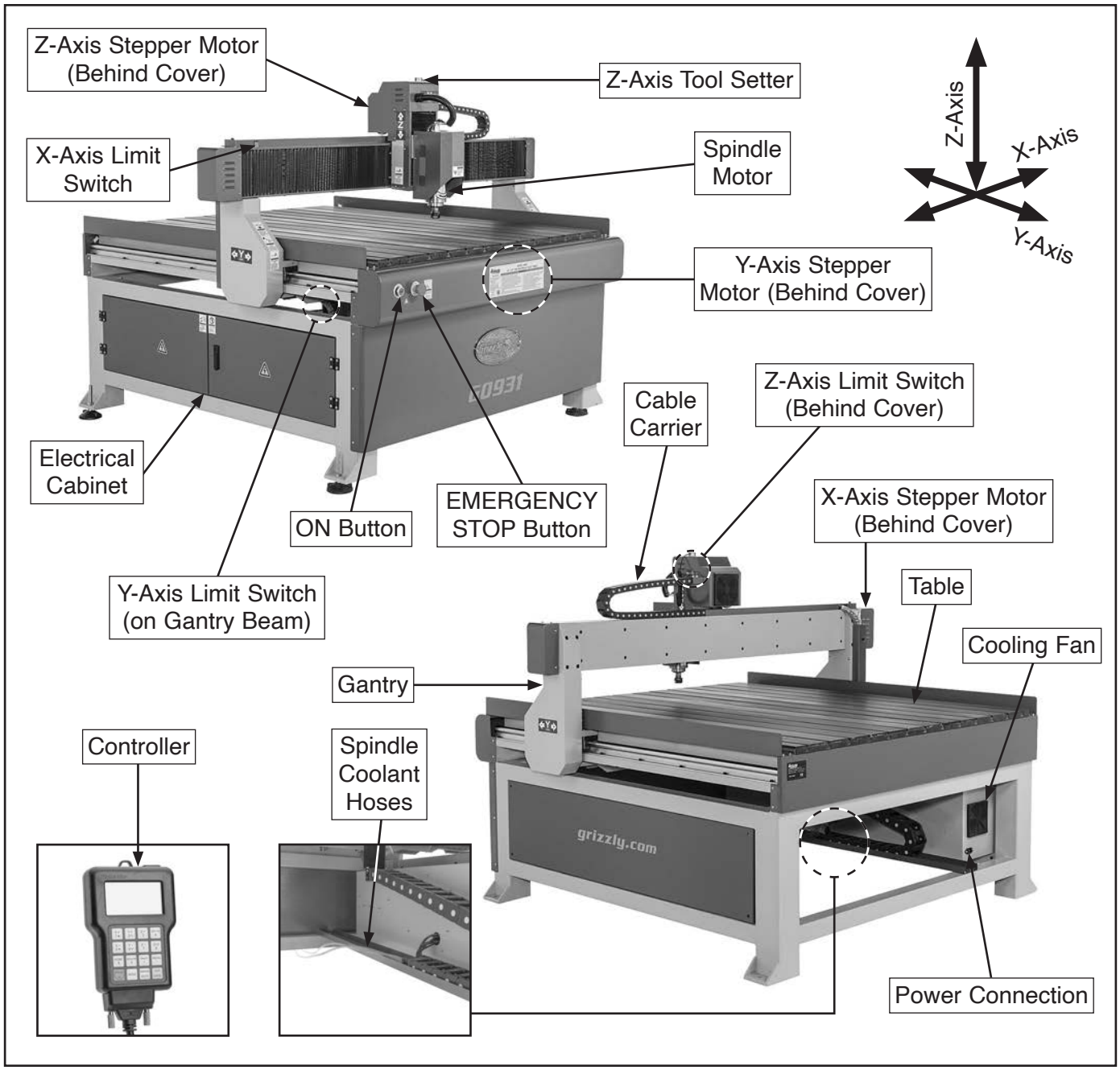

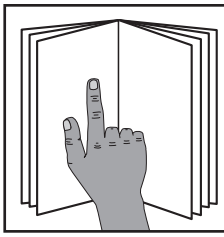

⚠WARNING

To reduce your risk of serious injury, read this entire manual BEFORE using machine.

Controls & Components

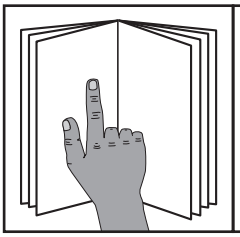

⚠WARNING

To reduce your risk of serious injury, read this entire manual BEFORE using machine.

Refer to the following figures and descriptions to become familiar with the basic controls and components of this machine. Understanding these items and how they work will help you understand the rest of the manual and minimize your risk of injury when operating this machine.

Spindle Assembly

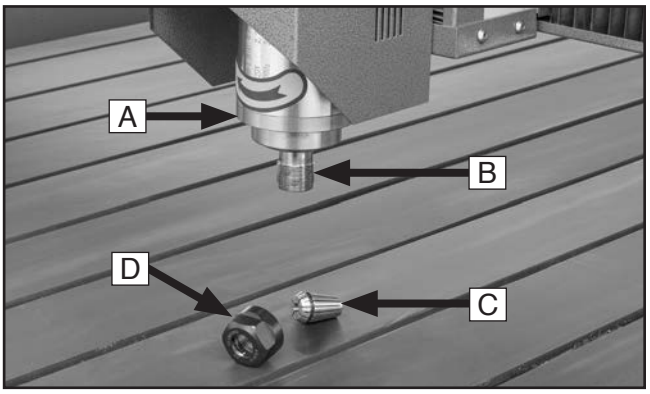

Figure 1. Spindle components.

A. Spindle Motor: 3 HP motor capable of rotating cutting tool at 0–24,000 RPM.

B. Spindle: Motor shaft that holds the cutting tool, spindle nut, and collet.

C. ER20 Collet: Holds cutting tool.

D. Spindle Nut: Secures collet and cutting tool on spindle.

Power Controls

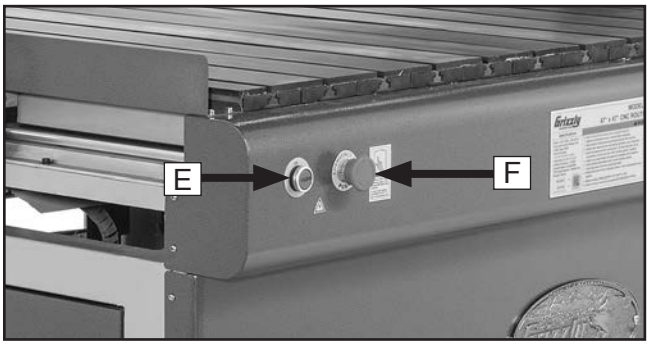

Figure 2. Power buttons.

E. ON Button: Turns machine ***ON*** when pressed.

F. EMERGENCY STOP Button: Disables power to machine. To reset, twist button clockwise until it pops out.

Additional Components

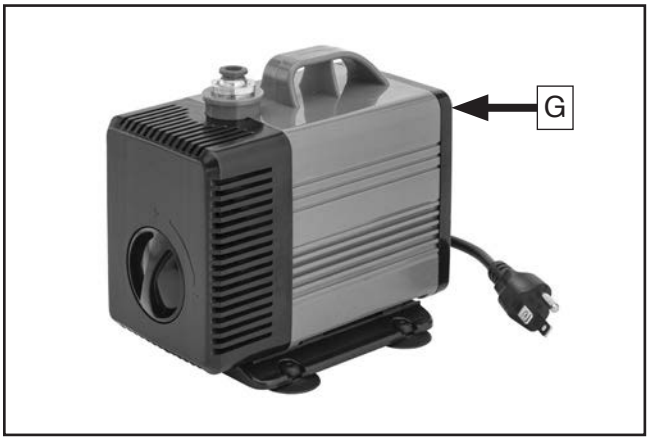

Figure 3. Cooling pump.

G. Cooling Pump: Cools spindle motor by continuously pumping water while plugged in.

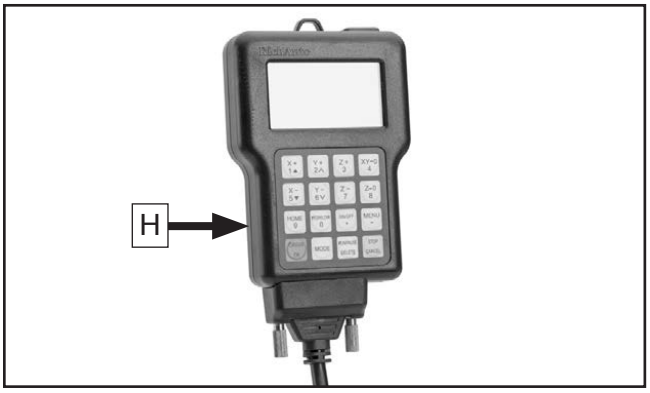

Figure 4. Hand-held controller.

H. Controller: Controls machine functions.

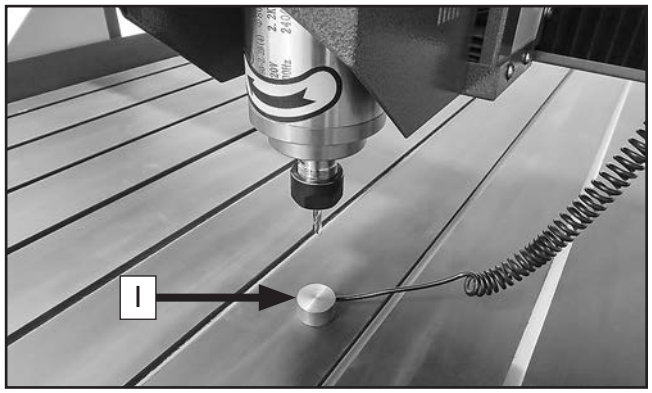

Figure 5. Z-axis tool setter.

I. Z-Axis Tool Setter: Establishes Z-axis origin based on surface tool setter is placed on.

Controller Functions

The following commands are used for the basic navigation of the machine and controller. Additional functions can be accessed with multi-button commands (see **Using Advanced Controls** on **Page 34**) for more information.

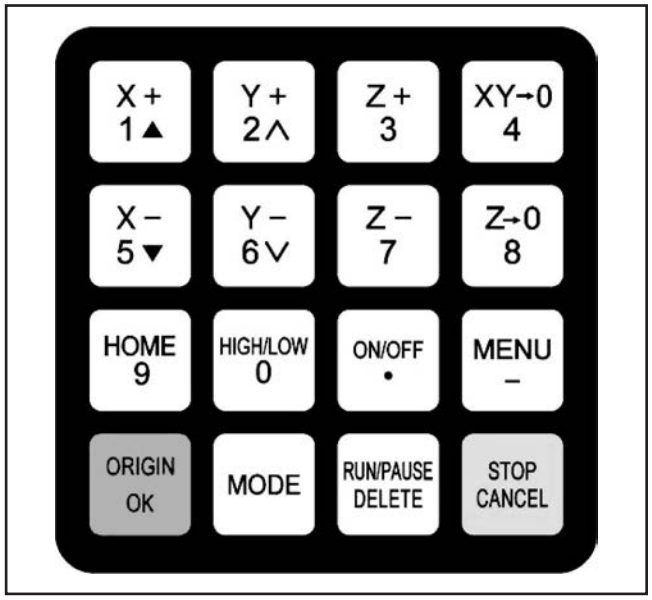

Figure **6**. Controller buttons.

X+ or **1:** Moves spindle motor along X-axis in positive direction. Scrolls menu up. Input for "1".

Y+ or **2:** Moves spindle motor along Y-axis in positive direction. Increases feed rate. Scrolls sub-menu up. Input for "2".

Z+ or **3:** Moves spindle motor along Z-axis in positive direction. Increases spindle speed during process. Input for "3".

XY->0 or **4:** Sets work origin of X- and Y-axes (see **Page 30**). Input for "4".

X- or **5:** Moves spindle motor along X-axis in negative direction. Scrolls menu down. Input for "5".

Y- or **6:** Moves spindle motor along Y-axis in negative direction. Decreases feed rate. Scrolls sub-menu down. Input for "6".

Z- or **7:** Moves spindle motor along Z-axis in negative direction. Decreases spindle speed during process. Input for "7".

Z->0 or **8:** Sets work origin of Z-axis (see **Page 30**). Input for "8".

HOME or **9:** Returns all axes to home position (see **Page 30**). Input for "9".

HIGH/LOW or **0:** In manual mode, selects high or low speed for axis movement. Input for "0".

ON/OFF or **(.):** Turns spindle ***ON*** or ***OFF***. Input for decimal point.

MENU or **(-):** Enters setup menus. Input for the negative symbol.

ORIGIN or **OK:** Returns all axes to work origin (see **Page 30**). Confirms motions, inputs, or operations.

MODE: Toggles between the three jogging modes: Continuous, Step, or Distance.

RUN/PAUSE or **DELETE:** Runs or pauses processing. Use to load a program from either the USB drive or internal memory.

STOP or **CANCEL:** Stops a running program. Cancels commands.

Glossary Of Terms

The following is a list of common definitions, terms and phrases used throughout this manual as they relate to this CNC router and woodworking in general. Become familiar with these terms for assembling, adjusting or operating this machine. Your safety is VERY important to us at Grizzly!

Axis: Direction of movement. On a three-axis milling machine, axes are typically X (left-right), Y (front-back) & Z (up-down). Axis directions are described as positive or negative. On this machine, negative movement is defined as movement towards the front (Y), left (X), and bottom (Z) of the working envelope.

Ball End (Ball Nose): A cutting tool that has a rounded cutting arc, where the arc diameter is equal to the cutting diameter.

Ball Screw: Drive system component. The ball screw is rotated by the stepper motor and provides the means for moving the gantry and spindle along the axes.

Bed: The bed of the CNC consists of a welded steel frame, an extruded aluminum table top, and a tongue-and-groove table top with integrated T-slots.

CAD: Computer aided design. CAD software is used to create a digital model of a project.

CAM: Computer aided manufacturing. CAM software converts CAD models into a toolpath defined by G-code that CNC machines can interpret.

Chip Load: Chip load is the measure of the thickness of chips a tool will cut. Chip load is equal to: Feed Rate ÷ (Spindle Speed X Number of Flutes).

Climb Cut: Cut that occurs when the rotation of the cutter moves in same direction as the workpiece.

CNC: Computer numerical control. Manufacturing controlled by a computer via coded instructions.

Collet: Metal collar that holds the cutting tool in place within a spindle nut.

Compression Bit: A cutting tool with a combination of up and down shear cutting edges. Typically used for cutting laminate material to prevent tear-out on both sides of the sheet.

Conventional Cut: Cut that occurs when the rotation of the cutter moves in opposite direction as the workpiece.

Down-Cut Bit: A cutting tool with edges that carve downward on the face of the toolpath. Reduces the potential for tear-out, but requires a slower feed rate.

Dust Shoe: An accessory that channels dust and debris directly from the cutting tool through an attached dust collection system.

End Mill: A cutting tool with a straight end, typically with spiral flute(s). It creates a channel with a flat bottom perpendicular to the sides.

Feed Rate: The speed at which the cutting tool moves along a workpiece.

Finish Cut: A 3D toolpath that reduces or eliminates the irregular contours left by a rough cut.

Flute Length: The length of the cutting portion on a router bit or cutting tool.

Flutes: The cutting edges or inserts of a router bit or cutting tool.

Form Bit: A bit that carves a standard profile such as a roundover, ogee, or similar contour.

Gantry: The structure that straddles the bed and carries the spindle. It moves the full length of the bed along the Y-axis.

G-Code: A machine language that uses axis points and commands, which the machine uses to move and perform functions.

Hold-Down: A clamp used to firmly hold a workpiece or fixture to the table.

Home Position: A fixed point on the machine set with proximity switches. It is the machine zero point on all axes.

Letter Address: The first letter of a G-code command. Commands with similar functions are usually grouped within the same letter address. For example, the "G" letter address deals with preparatory functions that define the machine's operation, while the "M" letter address handles miscellaneous machine functions such as turning on spindles, pumps, and other auxiliary tasks.

Origin: User designated zero point for a workpiece from which the router will reference the positioning of all cutting.

Plunge: The distance on the Z-axis that the spindle and cutting tool moves toward, into, or along the workpiece.

Pocket Toolpath: A toolpath that creates a cavity in the horizontal surface of a workpiece.

Post Processor: A software function that formats G-code into a dialect understood by a specific machine.

Profile Toolpath: A toolpath that cuts along the profile of a set of vectors. Typically used to cut out the shape of a design.

Proximity Switch: A magnetic limit switch that is used to find home position.

Rapid: The maximum speed of each axis. Higher rapid rates decrease machining times.

Rough Cut: A 3D toolpath where the initial cut is designed to remove unwanted material, leaving a rough contour.

Soft Limits: Axis limits imposed by the work space boundaries and based on controller settings and the location of home. An “out of soft limits error” implies that there is not enough room to move in a designated direction based on the positioning of the workpiece.

Spindle Speed: Rotational speed of cutting tool (RPM).

Spoilboard: Sacrificial material placed under the workpiece that allows the cutting tool to go past the workpiece to ensure a full, clean cut without damaging the work table. Usually made of MDF.

Stepper Motor: DC motor that moves in precise steps when pulses are received. Has very accurate positioning and speed control.

Surfacing: The process of leveling the surface of a workpiece or spoilboard so it is perpendicular to the spindle.

Tool Deflection: Tool deflection occurs when the spindle speed and feed rate exert sufficient force to deflect the cutting tool. Deflection leads to excessive wear and chatter, which can shorten tool life and leave unwanted tooling marks on the material.

Tool Setter: A device used to set the zero point (origin) for the Z-axis.

Toolpath: User defined route that the cutter follows to machine a workpiece.

Up-Cut Bit: A cutting tool with edges that carve upward on the face of the toolpath. This removes chips from the material, but can pull the material off the bed and splinter the top edge.

VFD: Variable frequency drive that controls the speed (RPM) of the spindle. Enables the fine tuning of the spindle during the operation of a toolpath.

Working Envelope: The three-dimensional area that the spindle can travel within while cutting or milling.

MACHINE DATA SHEET

Customer Service #: (570) 546-9663 · To Order Call: (800) 523-4777 · Fax #: (800) 438-5901

MODEL G0931
47" X 47" CNC ROUTER W/T-SLOT TABLE

Product Dimensions:

Weight	838 lbs.
Width (side-to-side) x Depth (front-to-back) x Height	70 x 62-1/2 x 53-1/2 in.
Footprint (Length/Width)	58 x 60 in.

Shipping Dimensions:

Type	Plywood Crate
Content	Machine and Electrical Cabinet
Weight	948 lbs.
Length x Width x Height	75 x 69 x 68 in.
Must Ship Upright	Yes

Electrical:

Power Requirement	220V, Single-Phase, 60 Hz
Full-Load Current Rating	20A
Minimum Circuit Size	20A
Connection Type	Cord & Plug
Power Cord Included	Yes
Power Cord Length	70 in.
Power Cord Gauge	14 AWG
Plug Included	Yes
Included Plug Type	6-15
Switch Type	ON/OFF Push Button w/Emergency Stop
Inverter (VFD) Type	Fulin DZB280B002.2L2DK
Inverter (VFD) Size	3 HP

Motors:

Spindle Motor

Type	Spindle
Horsepower	3 HP
Phase	3-Phase
Amps	8A
Speed	0 - 24,000 RPM
Number Of Speeds	Variable
Power Transfer	Direct

X-Axis Motor

Frame Size	NEMA 34
Amps	4A
Speed	0 - 2000 RPM
Type	Stepper (Brushless, Permanent Magnet)
Power Transfer	Direct
Step Resolution	1.8 deg. Per Step

Y-Axis Motor

Frame Size	NEMA 34
Amps	4A
Speed	0 - 2000 RPM
Type	Stepper (Brushless, Permanent Magnet)
Power Transfer	Direct
Step Resolution	1.8 deg. Per Step

Z-Axis Motor

Frame Size	NEMA 34
Amps	4A
Speed	0 - 2000 RPM
Type	Stepper (Brushless, Permanent Magnet)
Power Transfer	Direct
Step Resolution	1.8 deg. Per Step

Main Specifications:

Axis Information

X Axis Travel	47-1/4 in.
Y Axis Travel	47-1/4 in.
Z Axis Travel	7-7/8 in.
XY Rapid Speed	709 IPM
Z Rapid Speed	394 IPM

Construction

Table	Aluminum w/Closed Cell PVC
Body Construction	Cast Iron
Paint.	Enamel

Cutting Information

Work Envelope	47-1/4 x 47-1/4 x 7-7/8 in.
Max Distance Spindle to Table	7-7/8 in.
Cutting Accuracy	+/-0.002 in.

Table Information

Table Length	51-1/4 in.
Table Width	51-1/4 in.

Other Related Information

Number of Dust Ports	1
Dust Port Size	4 in.
Number of Leveling Feet	4
Collet Type	ER20
Controller	RichAuto DSP A11

Other Specifications:

Country of Origin	China
Warranty	1 Year
Approximate Assembly & Setup Time	1 Hour
Serial Number Location	ID Label
ISO 9001 Factory	Yes

Features:

RichAuto DSP A11 Handheld Controller with USB Port and Keypad
Water Cooled Spindle with Included Water Pump
Aluminum Table with T-Track and PVC Padding
Tool Touch-Off Pad for Quickly Setting Z-Axis Height

SECTION 1: SAFETY

For Your Own Safety, Read Instruction Manual Before Operating This Machine

The purpose of safety symbols is to attract your attention to possible hazardous conditions. This manual uses a series of symbols and signal words intended to convey the level of importance of the safety messages. The progression of symbols is described below. Remember that safety messages by themselves do not eliminate danger and are not a substitute for proper accident prevention measures. Always use common sense and good judgment.

⚠DANGER **Indicates an imminently hazardous situation which, if not avoided, WILL result in death or serious injury.**

⚠WARNING **Indicates a potentially hazardous situation which, if not avoided, COULD result in death or serious injury.**

⚠CAUTION **Indicates a potentially hazardous situation which, if not avoided, MAY result in minor or moderate injury. It may also be used to alert against unsafe practices.**

NOTICE **Alerts the user to useful information about proper operation of the machine to avoid machine damage.**

Safety Instructions for Machinery

⚠WARNING

OWNER'S MANUAL. Read and understand this owner's manual BEFORE using machine.

TRAINED OPERATORS ONLY. Untrained operators have a higher risk of being hurt or killed. Only allow trained/supervised people to use this machine. When machine is not being used, disconnect power, remove switch keys, or lock-out machine to prevent unauthorized use—especially around children. Make your workshop kid proof!

DANGEROUS ENVIRONMENTS. Do not use machinery in areas that are wet, cluttered, or have poor lighting. Operating machinery in these areas greatly increases the risk of accidents and injury.

MENTAL ALERTNESS REQUIRED. Full mental alertness is required for safe operation of machinery. Never operate under the influence of drugs or alcohol, when tired, or when distracted.

ELECTRICAL EQUIPMENT INJURY RISKS. You can be shocked, burned, or killed by touching live electrical components or improperly grounded machinery. To reduce this risk, only allow qualified service personnel to do electrical installation or repair work, and always disconnect power before accessing or exposing electrical equipment.

DISCONNECT POWER FIRST. Always disconnect machine from power supply BEFORE making adjustments, changing tooling, or servicing machine. This prevents an injury risk from unintended startup or contact with live electrical components.

EYE PROTECTION. Always wear ANSI-approved safety glasses or a face shield when operating or observing machinery to reduce the risk of eye injury or blindness from flying particles. Everyday eyeglasses are NOT approved safety glasses.

⚠WARNING

WEARING PROPER APPAREL. Do not wear loose clothing, gloves, neckties, or jewelry that can become entangled in moving parts. Always tie back or cover long hair. Wear non-slip footwear to reduce risk of slipping and losing control or accidentally contacting cutting tool or moving parts.

HAZARDOUS DUST. Dust created by machinery operations may cause cancer, birth defects, or long-term respiratory damage. Be aware of dust hazards associated with each workpiece material. Always wear a NIOSH-approved respirator to reduce your risk.

HEARING PROTECTION. Always wear hearing protection when operating or observing loud machinery. Extended exposure to this noise without hearing protection can cause permanent hearing loss.

REMOVE ADJUSTING TOOLS. Tools left on machinery can become dangerous projectiles upon startup. Never leave chuck keys, wrenches, or any other tools on machine. Always verify removal before starting!

USE CORRECT TOOL FOR THE JOB. Only use this tool for its intended purpose—do not force it or an attachment to do a job for which it was not designed. Never make unapproved modifications—modifying tool or using it differently than intended may result in malfunction or mechanical failure that can lead to personal injury or death!

AWKWARD POSITIONS. Keep proper footing and balance at all times when operating machine. Do not overreach! Avoid awkward hand positions that make workpiece control difficult or increase the risk of accidental injury.

CHILDREN & BYSTANDERS. Keep children and bystanders at a safe distance from the work area. Stop using machine if they become a distraction.

GUARDS & COVERS. Guards and covers reduce accidental contact with moving parts or flying debris. Make sure they are properly installed, undamaged, and working correctly BEFORE operating machine.

FORCING MACHINERY. Do not force machine. It will do the job safer and better at the rate for which it was designed.

NEVER STAND ON MACHINE. Serious injury may occur if machine is tipped or if the cutting tool is unintentionally contacted.

STABLE MACHINE. Unexpected movement during operation greatly increases risk of injury or loss of control. Before starting, verify machine is stable and mobile base (if used) is locked.

USE RECOMMENDED ACCESSORIES. Consult this owner's manual or the manufacturer for recommended accessories. Using improper accessories will increase the risk of serious injury.

UNATTENDED OPERATION. To reduce the risk of accidental injury, turn machine ***OFF*** and ensure all moving parts completely stop before walking away. Never leave machine running while unattended.

MAINTAIN WITH CARE. Follow all maintenance instructions and lubrication schedules to keep machine in good working condition. A machine that is improperly maintained could malfunction, leading to serious personal injury or death.

DAMAGED PARTS. Regularly inspect machine for damaged, loose, or mis-adjusted parts—or any condition that could affect safe operation. Immediately repair/replace BEFORE operating machine. For your own safety, DO NOT operate machine with damaged parts!

MAINTAIN POWER CORDS. When disconnecting cord-connected machines from power, grab and pull the plug—NOT the cord. Pulling the cord may damage the wires inside. Do not handle cord/plug with wet hands. Avoid cord damage by keeping it away from heated surfaces, high traffic areas, harsh chemicals, and wet/damp locations.

EXPERIENCING DIFFICULTIES. If at any time you experience difficulties performing the intended operation, stop using the machine! Contact our Technical Support at (570) 546-9663.

Additional Safety for CNC Routers

⚠WARNING

You can be seriously injured or killed by getting clothing, jewelry, or long hair entangled with rotating cutter/spindle. You can be severely cut or have fingers amputated from contact with rotating cutters. You can be blinded or struck by broken cutting tools, wood chips, improperly secured workpieces, or adjustment tools thrown from rotating spindle with great force. To reduce risk of serious injury when operating this machine, heed and understand the following:

UNDERSTAND ALL CONTROLS. Make sure you understand the function and proper use of all controls before starting. This will help you avoid making mistakes that result in serious injury.

AVOIDING ENTANGLEMENT. DO NOT wear loose clothing, gloves, or jewelry, and tie back long hair. Keep all guards in place, secure, and properly operating. Always allow spindle to stop on its own. DO NOT stop spindle using your hand or any other object.

WEAR EYE PROTECTION. Always wear safety glasses. This provides protection for your eyes from wood chips or broken cutting tools.

USE CORRECT SPINDLE SPEED. Use proper speeds and feeds for each size and type of cutting tool as recommended by tool manufacturer. This helps avoid injury risk from tool breakage during operation and ensures best cutting results.

FIRE HAZARD. To reduce risk of fire, always use proper feeds and speeds for cutting tool and workpiece type. Avoid operations that dwell in one place. Be aware of signs of fire and keep fire extinguisher nearby. Chips and dust collection can disguise embers and smoke. Prepare a fire safety plan and ensure it is practiced by all operators. Never operate machine unattended unless workspace has a lights-out fire prevention system.

INSPECT CUTTING TOOL. Inspect cutting tools for sharpness, chips, or cracks before each use. Replace dull, chipped, or cracked cutting tools immediately. Do not use damaged tools as they are likely to break apart and could hit user with great speed and force.

PROPERLY SECURE CUTTER. Firmly secure cutting tool so it does not fly out of spindle during operation.

PROPERLY COLLECT DUST. Only use dust collector to clear chips while spindle is turning. DO NOT clear chips by hand when cleaning. Only use a brush or shop vacuum when spindle/axes are NOT turning or moving.

SECURE WORKPIECE TO TABLE. Secure workpiece to table so workpiece cannot unexpectedly move or spin during operation. NEVER hold workpiece by hand during operation.

PROPERLY MAINTAIN MACHINE. Keep machine in proper working condition to help ensure that it functions safely and all guards and other components work as intended. Perform routine inspections and all required maintenance. Never operate machine with damaged or worn parts that can break or result in unexpected movement during operation.

DISCONNECT POWER FIRST. To reduce risk of electrocution or injury from unexpected startup, make sure CNC router is turned ***OFF***, disconnected from power, and all moving parts are completely stopped before changing cutting tools or performing any inspection, adjustment, or maintenance procedure.

REMOVE SPINDLE TOOLS. Always remove wrenches and other tools used on the spindle immediately after use. This will prevent them from being thrown by the spindle upon startup.

SECTION 2: POWER SUPPLY

Availability

Before installing the machine, consider the availability and proximity of the required power supply circuit. If an existing circuit does not meet the requirements for this machine, a new circuit must be installed. To minimize the risk of electrocution, fire, or equipment damage, installation work and electrical wiring must be done by an electrician or qualified service personnel in accordance with all applicable codes and standards.



⚠WARNING

Electrocution, fire, shock, or equipment damage may occur if machine is not properly grounded and connected to power supply.

Full-Load Current Rating

The full-load current rating is the amperage a machine draws at 100% of the rated output power. On machines with multiple motors, this is the amperage drawn by the largest motor or sum of all motors and electrical devices that might operate at one time during normal operations.

Full-Load Current Rating at 220V ..... 20 Amps

The full-load current is not the maximum amount of amps that the machine will draw. If the machine is overloaded, it will draw additional amps beyond the full-load rating.

If the machine is overloaded for a sufficient length of time, damage, overheating, or fire may result—especially if connected to an undersized circuit. To reduce the risk of these hazards, avoid overloading the machine during operation and make sure it is connected to a power supply circuit that meets the specified circuit requirements.

Circuit Information

A power supply circuit includes all electrical equipment between the breaker box or fuse panel in the building and the machine. The power supply circuit used for this machine must be sized to safely handle the full-load current drawn from the machine for an extended period of time. (If this machine is connected to a circuit protected by fuses, use a time delay fuse marked D.)

⚠CAUTION

For your own safety and protection of property, consult an electrician if you are unsure about wiring practices or electrical codes in your area.

Note: *Circuit requirements in this manual apply to a dedicated circuit—where only one machine will be running on the circuit at a time. If machine will be connected to a shared circuit where multiple machines may be running at the same time, consult an electrician or qualified service personnel to ensure circuit is properly sized for safe operation.*

Circuit Requirements

This machine is prewired to operate on a power supply circuit that has a verified ground and meets the following requirements:

Nominal Voltage 208V, 220V, 230V, 240V
Cycle ..... 60 Hz
Phase ..... Single-Phase
Power Supply Circuit ..... 20 Amps
Plug/Receptacle ..... NEMA 6-15

Grounding Requirements

This machine MUST be grounded. In the event of certain malfunctions or breakdowns, grounding reduces the risk of electric shock by providing a path of least resistance for electric current.

This machine is equipped with a power cord that has an equipment-grounding wire and a grounding plug. Only insert plug into a matching receptacle (outlet) that is properly installed and grounded in accordance with all local codes and ordinances. DO NOT modify the provided plug!

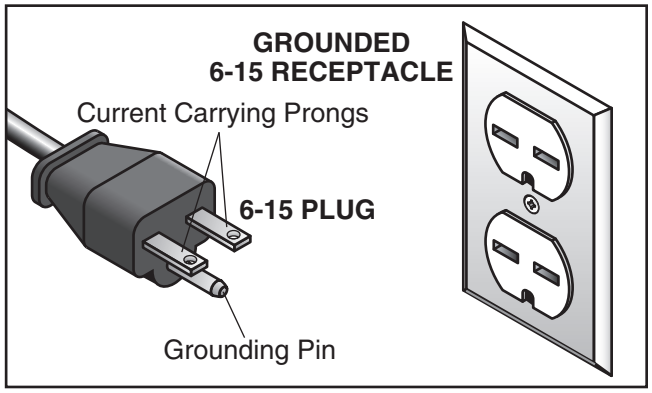

Figure 7. Typical 6-15 plug and receptacle.

⚠CAUTION

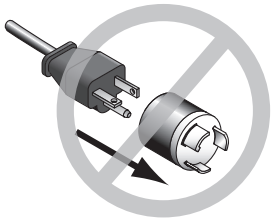

No adapter should be used with plug. If plug does not fit available receptacle, or if machine must be reconnected for use on a different type of circuit, reconnection must be performed by an electrician or qualified service personnel, and it must comply with all local codes and ordinances.

⚠WARNING

Serious injury could occur if you connect machine to power before completing setup process. DO NOT connect to power until instructed later in this manual.

Improper connection of the equipment-grounding wire can result in a risk of electric shock. The wire with green insulation (with or without yellow stripes) is the equipment-grounding wire. If repair or replacement of the power cord or plug is necessary, do not connect the equipment-grounding wire to a live (current carrying) terminal.

Check with a qualified electrician or service personnel if you do not understand these grounding requirements, or if you are in doubt about whether the machine is properly grounded. If you ever notice that a cord or plug is damaged or worn, disconnect it from power, and immediately replace it with a new one.

Extension Cords

We do not recommend using an extension cord with this machine. If you must use an extension cord, only use it if absolutely necessary and only on a temporary basis.

Extension cords cause voltage drop, which can damage electrical components and shorten motor life. Voltage drop increases as the extension cord size gets longer and the gauge size gets smaller (higher gauge numbers indicate smaller sizes).

Any extension cord used with this machine must be in good condition and contain a ground wire and matching plug/receptacle. Additionally, it must meet the following size requirements:

Minimum Gauge Size.....12 AWG
Maximum Length (Shorter is Better).....50 ft.

SECTION 3: SETUP

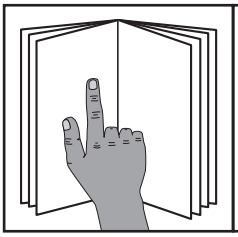

⚠WARNING

To reduce your risk of serious injury, read this entire manual BEFORE using machine.

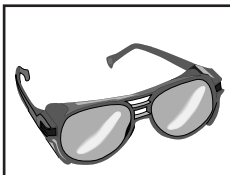

⚠WARNING

Eye injury hazard! Always wear safety glasses when using this machine.



⚠WARNING

HEAVY LIFT!

Straining or crushing injury may occur from improperly lifting machine or some of its parts. To reduce this risk, get help from other people and use a forklift (or other lifting equipment) rated for weight of this machine.

Needed for Setup

The following items are needed, but not included, for the setup/assembly of this machine.

Description	Qty
• Forklift or Hoist (rated for 1200 lbs.)	1
• Additional Person	1
• Safety Glasses (for each person)	1
• Level	1
• Open-End Wrenches 8, 24mm	1 Ea.
• Adjustable Wrench	1
• Power Drill	1
• Drill Bits ⅜", 1"	1 Ea.
• Dust Collection System	1
• Dust Hose 4"	1
• Hose Clamps 4"	2
• Distilled Water	4 Gal.
• 5-Gallon Bucket w/Lid	1

NOTICE

High mineral content or dirty coolant can cause buildup and damage spindle motor. Do not use tap water if water quality is low.

Unpacking

This machine was carefully packaged for safe transport. When unpacking, separate all enclosed items from packaging materials and inspect them for shipping damage. ***If items are damaged, please call us immediately at (570) 546-9663.***

IMPORTANT: Save all packaging materials until you are completely satisfied with the machine and have resolved any issues between Grizzly or the shipping agent. *You MUST have the original packaging to file a freight claim. It is also extremely helpful if you need to return your machine later.*

Inventory

The following is a list of items shipped with your machine. Before beginning setup, lay these items out and inventory them.

If any non-proprietary parts are missing (e.g. a nut or a washer), we will gladly replace them; or for the sake of expediency, replacements can be obtained at your local hardware store.

NOTICE

If you cannot find an item on this list, carefully check around/inside the machine and packaging materials. Often, these items get lost in packaging materials while unpacking or they are pre-installed at the factory.

Wooden Crate (Not Shown)	Qty
A. CNC Router	1

Box 1 (Figure 8)	Qty
B. Collet ER20 ⅛"	1
C. Collet ER20 ½"	1
D. Collet ER20 4mm	1
E. Collet ER20 6mm	1
F. Spoilboard Cutter 6 x 22mm	1
G. Engraving Bits ⅛" (10-Pc.)	1
H. Power Cord	1
I. Open-End Wrench 27/30mm	1
J. Open-End Wrench 18/21mm	1
K. Hex Wrenches 3, 4, 5, 6mm	1 Ea.
L. Hold-Down Clamps	4
M. Leveling Feet	4
N. Dust Shoe	1
O. Hex Nut M5-.8	1
P. Cap Screw M5-.8 x 45	1
Q. USB-B Cable	1
R. 50-Pin Cable	1
S. RichAuto A11 Controller	1
T. Cooling Pump	1
U. Quick-Disconnect Tube Couplings	4
V. Fuses 10A (Spares)	2
W. Limit Switch (Spare)	1

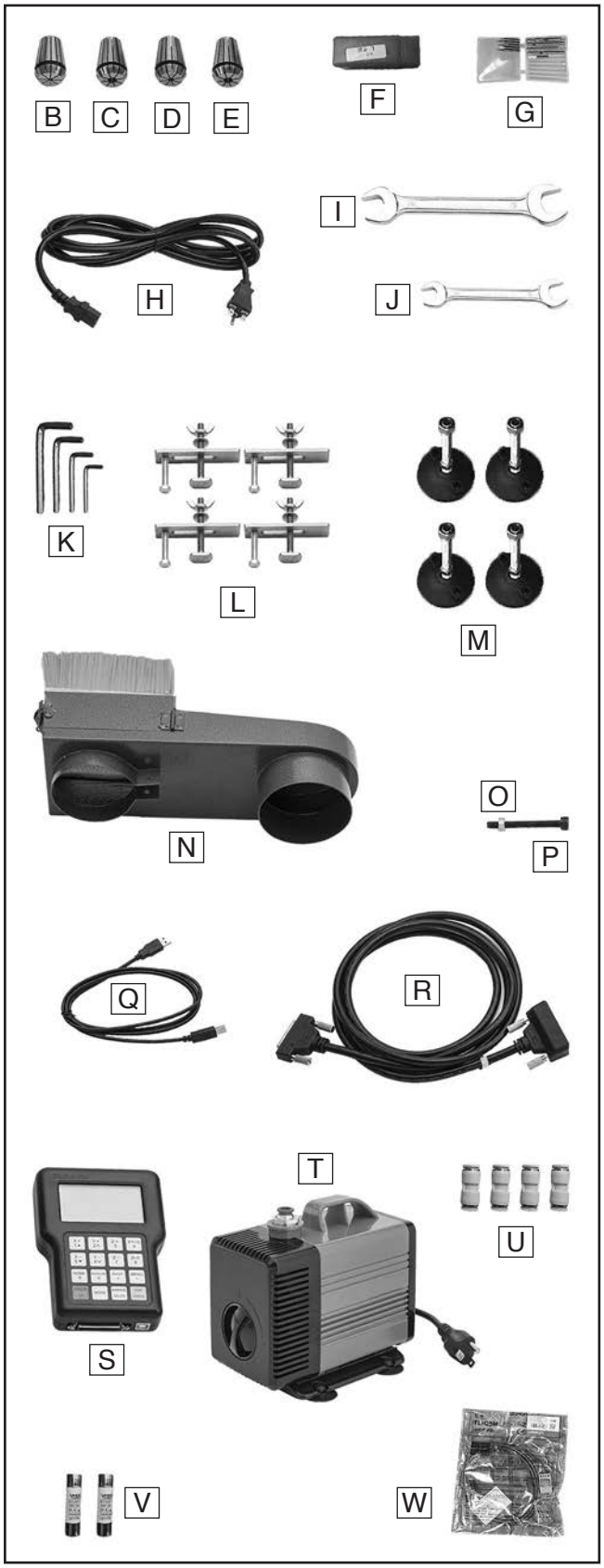

Figure 8. Box 1 inventory.

Site Considerations

Weight Load

Refer to the **Machine Data Sheet** for the weight of your machine. Make sure that the surface upon which the machine is placed will bear the weight of the machine, additional equipment that may be installed on the machine, and the heaviest workpiece that will be used. Additionally, consider the weight of the operator and any dynamic loading that may occur when operating the machine.

Space Allocation

Consider the largest size of workpiece that will be processed through this machine and provide enough space around the machine for adequate operator material handling or the installation of auxiliary equipment. With permanent installations, leave enough space around the machine to open or remove doors/covers as required by the maintenance and service described in this manual. **See below for required space allocation.**

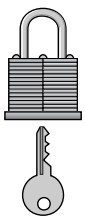

⚠CAUTION

Children or untrained people may be seriously injured by this machine. Only install in an access restricted location.

Physical Environment

The physical environment where the machine is operated is important for safe operation and longevity of machine components. For best results, operate this machine in a dry environment that is free from excessive moisture, hazardous chemicals, airborne abrasives, or extreme conditions. Extreme conditions for this type of machinery are generally those where the ambient temperature range exceeds 41°–104°F; the relative humidity range exceeds 20%–95% (non-condensing); or the environment is subject to vibration, shocks, or bumps.

Electrical Installation

Place this machine near an existing power source. Make sure all power cords are protected from traffic, material handling, moisture, chemicals, or other hazards. Make sure to leave enough space around machine to disconnect power supply or apply a lockout/tagout device, if required.

Lighting

Lighting around the machine must be adequate enough that operations can be performed safely. Shadows, glare, or strobe effects that may distract or impede the operator must be eliminated.

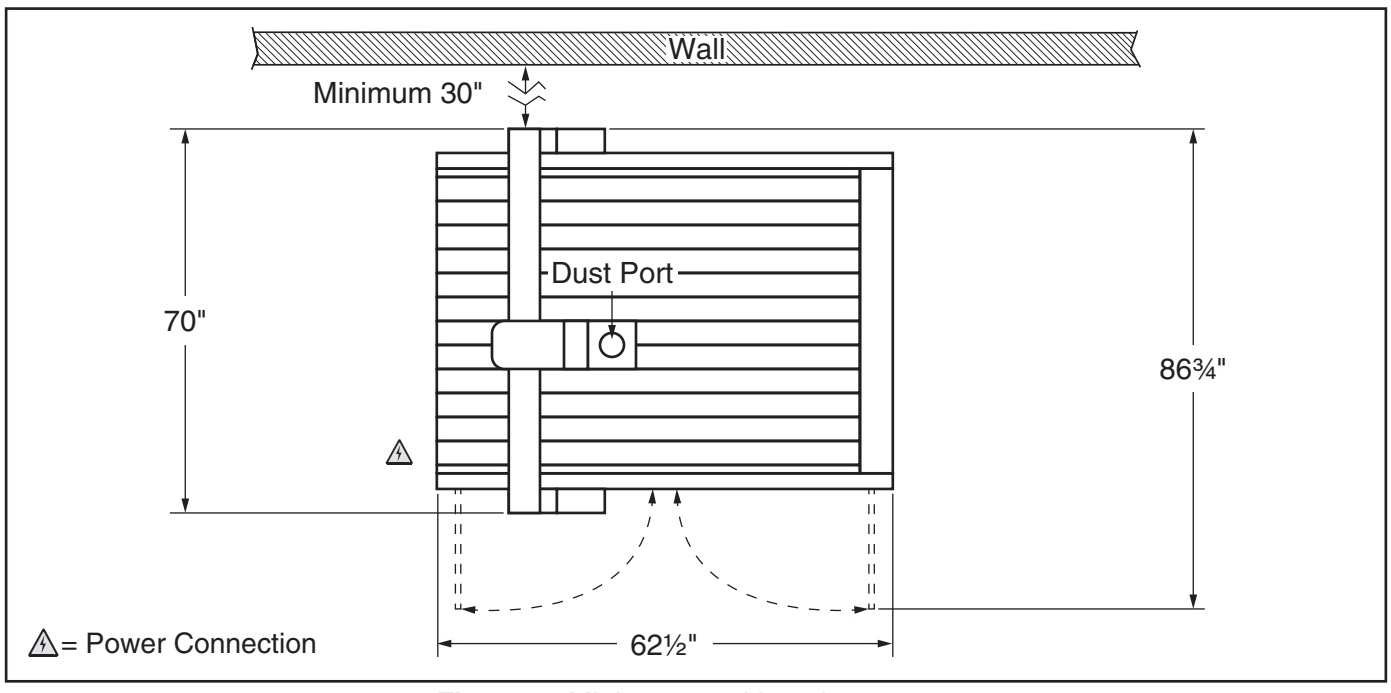

Figure 9. Minimum working clearances.

Lifting & Placing



⚠WARNING

HEAVY LIFT!

Straining or crushing injury may occur from improperly lifting machine or some of its parts. To reduce this risk, use a forklift (or other lifting equipment) rated for weight of this machine.

DO NOT attempt to lift or move this machine without using the proper lifting equipment (such as forklift or crane) or the necessary assistance from other people. Each piece of lifting equipment must be rated for **at least 1200 lbs.** to support dynamic loads that may be applied while lifting. Refer to **Needed for Setup** on **Page 15** for complete list of needed equipment for setup and installation.

Tools Needed	**Qty**
Forklift or Hoist (rated for 1200 lbs.)	1

To lift and place machine:

1. Move crate to machine work site.

2. Remove crate top and sides, small items inside crate, and blocks on machine base.

3. Lift machine with forklift or hoist just enough to clear pallet, then move pallet out of the way.

   Note: *Lift machine by the underside of machine body between the mounting legs.*

4. Have an additional person tighten hex nuts on leveling feet halfway on threaded bolt, then thread leveling feet into machine mounting legs (see **Figure 10**).

5. Lower machine on leveling feet and proceed to **Leveling** on this page.

Leveling

NOTICE

For accurate cutting results and to prevent warping, the table and frame MUST be leveled from side to side and from front to back on both ends. Re-check the table and frame 24 hours after installation, two weeks after that, and then annually to make sure they remain level.

Leveling machinery helps precision components remain straight and flat during the lifespan of the machine. Components on a machine that are not level may slowly twist due to the dynamic loads placed on the machine during operation.

To level machine:

1. Place level on table and align to either X- or Y-axis.

2. Loosen top leveling foot hex nut and adjust bottom fixed nut on threaded bolt (see **Figure 10**). Tighten hex nut against mounting leg to secure.

   Note: *Tighten fixed nut to raise machine, and loosen fixed nut to lower machine.*

3. Use level to check X- and Y-axes. Repeat as needed.

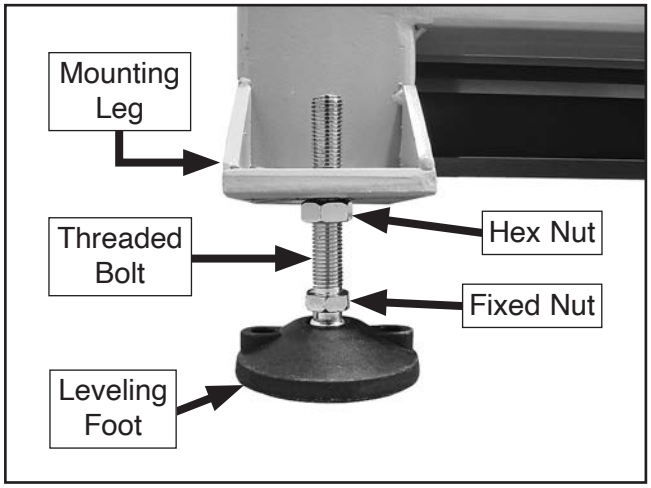

Figure 10. Leveling foot components.

Connecting Cooling Pump

The Model G0931 includes an external pump that cools the spindle motor. Coolant tubes come pre-installed on the motor and run through the cable carrier. The tube must be connected to the pump and submerged within a coolant reservoir.

A minimum of 4 gallons of water is required for normal operations. Hot conditions may require more coolant. If environmental temperatures are below freezing, 50/50 anti-freeze must be added.

NOTICE

Operating the router without the cooling pump may damage the internal components of the spindle motor.

To connect cooling pump:

1. Drill two ⅜" holes and one 1" hole in lid of 5-gallon bucket.

2. Locate both coolant tubes under bed at rear of machine, then insert each coolant tube through ⅜" holes in bucket lid (see **Figure 11**).

3. Insert cooling pump plug and cooling pump power cord through 1" hole in lid (see **Figure 11**).

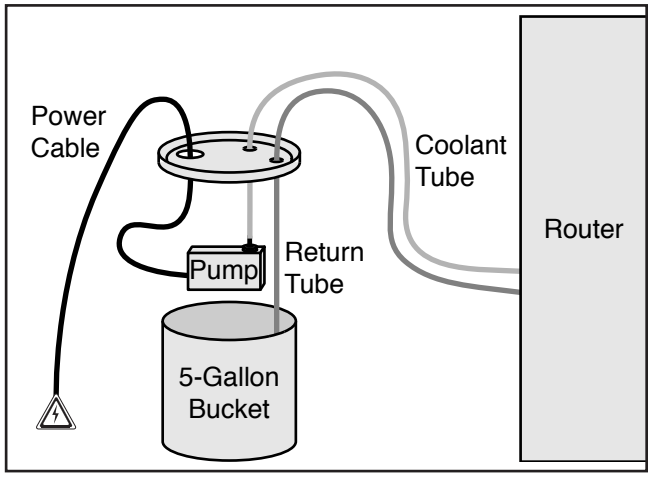

Figure 11. Connected cooling system.

4. Connect either coolant tube from back of machine to cooling pump outlet (see **Figure 12**).

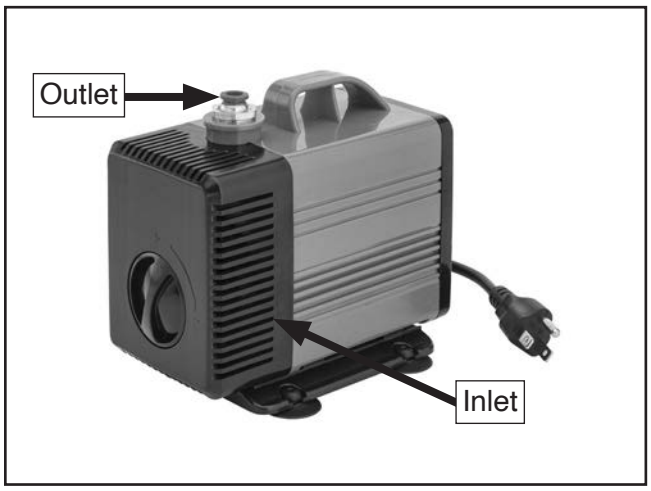

Figure 12. Cooling pump inlet and outlet.

5. Place pump and return tube in 5-gallon bucket (see **Figure 11**).

NOTICE

High mineral content or dirty coolant can cause buildup and damage spindle motor. Do not use tap water if water quality is poor.

6. Fill bucket with 4 gallons of distilled water. Make sure pump is completely submerged.

7. Secure bucket lid.

Connecting Controller

The Model G0931 includes a RichAuto A11 hand-held motion controller that controls all machine functions using G-code. The RichAuto control system uses an interface board located in the electrical cabinet (see **Figure 13**), a 50-pin data transmission cable, and a USB-B communication cable for digital connections.

To connect controller:

1. Open electrical cabinet on machine (see **Figure 13**).



Figure 13. Electrical cabinet location.

2. Connect 50-pin cable to interface board in electrical cabinet, then route cable through hole in cabinet floor (see **Figure 14**).

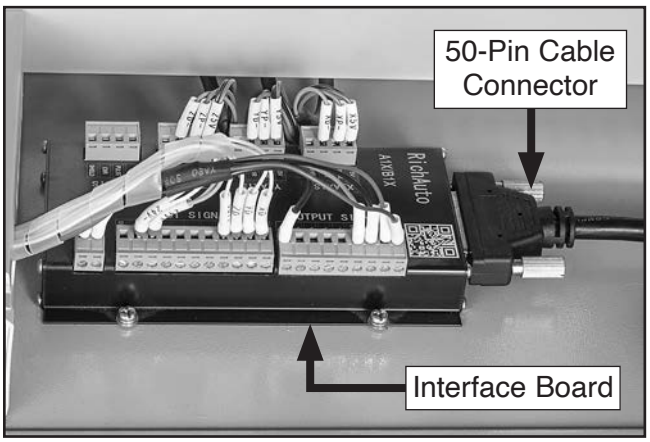

Figure 14. 50-pin cable connected to interface board.

3. Connect opposite end of 50-pin cable to controller (see **Figure 15**).



Figure 15. Controller connected to cable.

Dust Collection

⚠CAUTION

This machine creates a lot of wood chips/dust during operation. Breathing airborne dust on a regular basis can result in permanent respiratory illness. Reduce your risk by wearing a respirator and capturing the dust with a dust-collection system.

Minimum CFM at Dust Port: 400 CFM

Do not confuse this CFM recommendation with the rating of the dust collector. To determine the CFM at the dust port, you must consider these variables: (1) CFM rating of the dust collector, (2) hose type and length between the dust collector and the machine, (3) number of branches or wyes, and (4) amount of other open lines throughout the system. Explaining how to calculate these variables is beyond the scope of this manual. Consult an expert or purchase a good dust collection "how-to" book.

To connect dust collection system to machine:

1. Attach dust shoe bracket end to spindle motor and secure with (1) M5-.8 x 45 cap screw and (1) M5-.8 hex nut (see **Figure 16**).

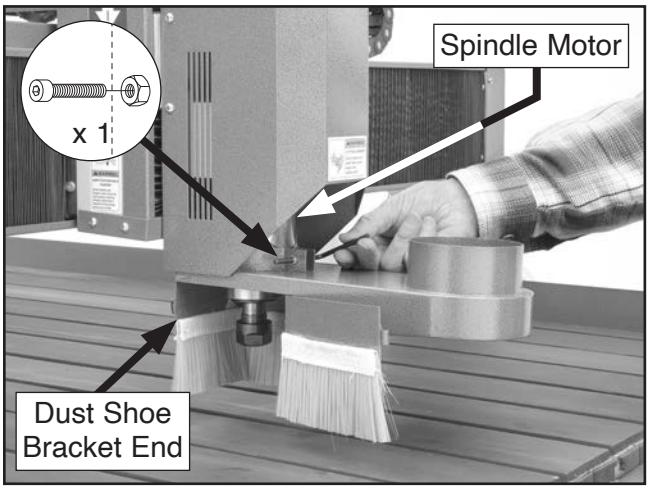

Figure 16. Attaching dust shoe bracket.

2. Fit 4" dust hose over dust port and secure in place with hose clamp (see **Figure 17**).

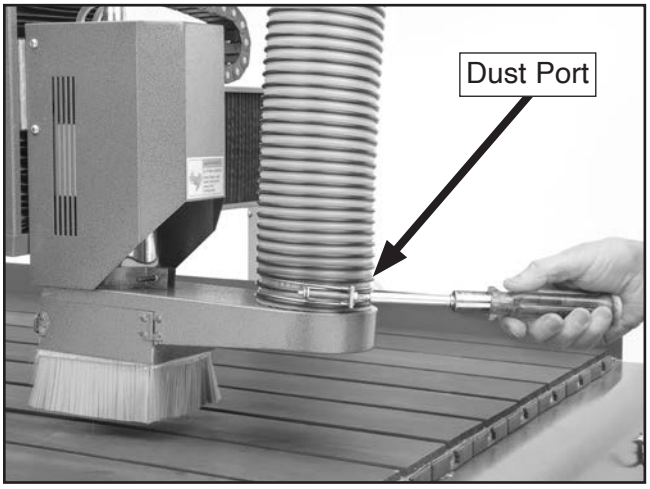

Figure 17. Tightening dust hose clamp.

3. Tug hose with light/medium force to make sure it does not easily come off.

   Note: *A tight fit is necessary for proper performance.*

Test Run

Once assembly is complete, test run the machine to ensure it is properly connected to power and safety components are functioning correctly.

If you find an unusual problem during the test run, immediately stop the machine, disconnect it from power, and fix the problem BEFORE operating the machine again. The **Troubleshooting** table in the **SERVICE** section of this manual can help.

For issues concerning the VFD, refer to the Folinn BD600 series manual found at **http://www.chinafolinn.com**. All VFD servicing should be done by an authorized and trained technician. The VFD parameters have been set at the factory to optimize the performance of the machine and should not be adjusted.

The test run consists of verifying the following: 1) the spindle motor powers up and runs correctly, 2) the axes motors run correctly and the machine properly homes, and 3) the EMERGENCY STOP button safety feature functions properly.

⚠WARNING

Serious injury or death can result from using this machine BEFORE understanding its controls and related safety information. DO NOT operate, or allow others to operate, machine until the information is understood.

⚠WARNING

DO NOT start machine until all preceding setup instructions have been performed. Operating an improperly set up machine may result in malfunction or unexpected results that can lead to serious injury, death, or machine/property damage.

To test run machine:

1. Clear all setup tools away from machine.
2. Ensure controller and cooling pump are connected to machine.
3. Press EMERGENCY STOP button.
4. Connect machine to power by inserting power cord socket into machine (see "Power Connection," **Identification** on **Page 3**), then inserting power cord plug into a matching receptacle.
5. Twist EMERGENCY STOP button clockwise until it springs out (see **Figure 18**). This resets the switch so the machine can start.



Figure 18. Resetting EMERGENCY STOP button.

6. Press ON button on machine to turn machine ***ON***.
7. Verify machine parameters as shown on **Page 23**.
8. Press ON button on controller to start spindle motor. Verify spindle starts and runs smoothly without any unusual problems or noises. Press ON to stop spindle motor.
9. Press HOME button on controller. Verify that each axis motor operates smoothly and that all axes move to machine zero.
10. Press EMERGENCY STOP button on machine to turn machine ***OFF***.
11. WITHOUT resetting EMERGENCY STOP button, try to start machine by pressing the ON button. The machine should not start.

    — If the machine *does not* start, the safety feature of the EMERGENCY STOP button is working correctly. Congratulations! The Test Run is complete.

    — If the machine *does* start, immediately turn it ***OFF*** and disconnect power. The safety feature of the EMERGENCY STOP button is NOT working properly and must be replaced before further using the machine.

Verifying Parameters

Machine parameters are essential to any operation. If the parameters are wrong, the machine will not produce accurate results, and damage to the machine and workpiece may occur.

NOTICE

Verify machine parameters before running any operation whenever machine is powered *ON.* Parameters can be changed or lost when power cycling occurs, and operating with incorrect parameters may result in damage to machine or workpiece.

Verifying Default Parameters

The machine parameters have been set at the factory, but they can be changed or lost due to hardware, software, or power issues. Consult this section to verify and reset parameters.

To verify default parameters:

1. Press MENU on the controller, then scroll to Machine Setup and press OK.

2. Scroll to each parameter shown on this page and press OK to verify.

   — To change a parameter, press RUN/PAUSE, then enter the new parameter. Press OK to save.

Pulse Equivalent:
X Equival 200.000
Y Equival 200.000
Z Equival..... 400.000

Table Size:
X Size 1200.000
Y Size 1200.000
Z Size 200.000

Home Setup
Home Speed (Unit MM/Sec.)
X Spd..... 3000.000
Y Spd..... 3000.000
Z Spd..... 1500.000

Home Direction
X Dir .....Neg
Y Dir .....Neg
Z Dir..... Pos

Max Speed Limit
Unit MM/Min.
X Fast 6000.00
Y Fast 6000.00
Z Fast 3000.00

Toolset Setup
C.A.D. Thickness
FlrHght..... 15.000

C.A.D. Pickup
PckupHgh 40.000

Verifying Voltage Parameters

The Voltage Setup screen enables opening or closing of input and output signals to machine components. The upper row of arrows represents the input side, and the lower row represents the output side (see **Figure 19**).

Voltage Parameters							
1	2	3	4	5	6	7	8
↓	↓	↓	↑	↓	↓	↓	↓
1	2	3	4	5	6	7	8
↓	↓	↓	↓	↓	↓	↓	↓

Figure 19. Voltage parameter settings.

To verify voltage parameters:

1. Press MENU on the controller, then scroll to Machine Setup and press OK.
2. Scroll to Voltage Setup and press OK to enter voltage parameter screen.
3. Verify arrows in voltage parameters match the table in **Figure 19**.
   - — Arrow down indicates normally open circuit. Arrow up indicates normally closed circuit. Numbers 1–8 correspond to X1–X8 inputs shown in **Verifying Input Parameters** on this page.
4. Press X+ or X- buttons to scroll left or right, and Y+ or Y- to scroll up or down, and highlight desired parameter.
5. Press RUN/PAUSE to cycle arrow direction up (normally closed) or down (normally open).
6. Press OK to save changes and return to menu screen.

Verifying Input Parameters

The input configuration screen shows electrical inputs sent by various machine components during operation (see **Figure 20**).

Input Parameters		
X1:	Enable	X-Axis Limit Switch
X2:	Enable	Y-Axis Limit Switch
X3:	Enable	Z-Axis Limit Switch
X4:	Enable	Tool Setter
X5:	Disable	Driver Alarm
X6:	Disable	Hard Limit
X7:	Enable	Emergency Stop
X8:	Disable	Pedal Switch

Figure 20. Input parameter settings.

NOTICE

Failure to properly configure machine input parameters may cause system errors.

To verify input parameters:

1. Press MENU on the controller, then scroll to Machine Setup and press OK.
2. Scroll to Input Confi and press OK to enter input configuration screen.
3. Verify parameters in Input Confi match the table in **Figure 20**.
4. Press X+ or X- buttons to scroll up or down, and highlight desired parameter.
5. Press RUN/PAUSE to change setting.
6. Press OK to save changes and return to menu screen.

SECTION 4: OPERATIONS

Operation Overview

The purpose of this overview is to provide the novice machine operator with a basic understanding of how the machine is used during operation, so the machine controls/components discussed later in this manual are easier to understand.

Due to the generic nature of this overview, it is **not** intended to be an instructional guide. To learn more about specific operations, read this entire manual, seek additional training from experienced machine operators, and do additional research outside of this manual by reading "how-to" books, trade magazines, or websites.

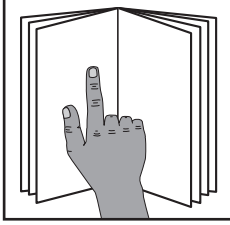

⚠WARNING

To reduce your risk of serious injury, read this entire manual BEFORE using machine.

⚠WARNING

Eye injuries, respiratory problems, or hearing loss can occur while operating this tool. Wear personal protective equipment to reduce your risk from these hazards.







NOTICE

If you are not experienced with this type of machine, WE STRONGLY RECOMMEND that you seek additional training outside of this manual. Read books/magazines or get formal training before beginning any projects. Regardless of the content in this section, Grizzly Industrial will not be held liable for accidents caused by lack of training.

To complete a typical operation, the operator does the following:

1. Designs/writes G-code that defines toolpath.
2. Uploads G-code to USB drive.
3. Examines workpiece to make sure it is suitable for cutting.
4. Installs appropriate cutter for type of material and operation.
5. If necessary, cuts workpiece to fit within working envelope of machine.
6. Clamps workpiece securely to table.
7. Turns machine ***ON***.
8. Homes all axes and verifies parameters (see **Page 23**).
9. Connects USB drive to hand-held controller.
10. Sets work origin. Uses Z-axis tool setter to set Z-axis relative to workpiece or table, depending on toolpath requirements.
11. Connects dust shoe and dust collection system to spindle.
12. Puts on safety glasses, respirator, and hearing protection.
13. Plugs in cooling pump and turns dust collection system ***ON***.
14. Runs G-code. Spindle will automatically start and follow toolpath.
15. When toolpath is complete, spindle will stop and return to position defined by G-code.

Workpiece Inspection

Some workpieces are not safe to cut or may require modification before they are safe to cut. **Before cutting, inspect all workpieces for the following:**

- ***Material Type:*** This machine is intended for cutting natural and man-made wood products, laminate covered wood products, and some plastics. Cutting drywall or cementitious backer board creates extremely fine dust and may reduce the life of the bearings. This machine is NOT designed to cut metal, glass, stone, tile, etc.; cutting these materials with this machine may lead to injury.

- ***Foreign Objects:*** Nails, staples, dirt, rocks and other foreign objects are often embedded in wood. While cutting, these objects can become dislodged and hit the operator, or break the cutter, which might then fly apart. Always visually inspect your workpiece for these items. If they can't be removed, DO NOT cut the workpiece.

- ***Large/Loose Knots:*** Loose knots can become dislodged during the cutting operation. Large knots can cause machine damage. Choose workpieces that do not have large/loose knots or plan ahead to avoid cutting through them.

- ***Wet or "Green" Stock:*** Cutting wood with a moisture content over 20% causes unnecessary wear on the cutter and yields poor results.

- ***Excessive Warping:*** Workpieces with excessive cupping, bowing, or twisting are dangerous to cut because they are unstable and often unpredictable when being cut. DO NOT use workpieces with these characteristics!

- ***Minor Warping:*** Workpieces with slight cupping can be safely supported if cupped side is facing table. On the contrary, a workpiece supported on the bowed side will rock during a cut and could cause severe injury.

Choosing Cutter

There are many cutters available. Be sure to choose the right one for your application and material. Read all manufacturer instructions before installing and using a cutter.

When choosing a cutter, consider:

1. ***Material Type:*** Most cutters are designed for specific material. Choose a unique bit for plywood, engineered wood products, hardwood, and composite to improve overall results. If a general-purpose bit is needed, a two-flute, upcut, spiral bit is a good choice.

2. ***Application:*** Many design features are best cut using specific tools. For example:

   — Use a V-bit for cutting signs and lettering.

   — Use a spoilboard cutter or fly cutter for surfacing a spoilboard or finishing a smooth, flat workpiece, such as a counter top.

   — Use a form bit to cut a profile with a uniform contour, such as an ogee or round over.

   — Use a chipbreaker or rougher for rough cuts and quickly removing a large amount of material when the finish does not matter.

3. ***Feed and Speed Rates:*** Feed rate, spindle speed, and number of flutes on the cutter determine chip load. The chip load affects the best diameter bit to use to get the highest quality finish while minimizing wear. Most manufacturers will list the recommended chip load for their cutters.

4. ***Depth and Width of Cut:*** The cutter must be long enough to reach the maximum plunge depth of the operation and small enough to cut the details of the piece. However, shorter, wider bits will deflect less, leading to more accurate cuts, and they are less prone to wear and breakage.

5. ***Finish:*** If a high-quality finish is a priority, use a cutter with more flutes. Four-flute cutters will be readily available in most cases. Don't forget that number of flutes is a component of calculating chip load.

6. ***Chip Displacement:*** Up-cut bits keep the workpiece clear of chips, but on composite materials the upward force of the operation will chip and fray the top surface of the workpiece. Down-cut bits leave a smooth finish on the top of the workpiece, but pressing chips down creates more heat during the cut and frays the bottom of the workpiece on through cuts. Compression bits are fluted to cut up on the bottom, and down on the top, compressing the workpiece during a cutting operation. Compression bits are ideal for cutting materials like plywood and other composites.

Changing Cutter



⚠CAUTION

Cutters are sharp! To reduce the risk of being cut, wear leather gloves when handling, installing, and removing cutters from spindle.

Items Needed	Qty
Open-End Wrench 21mm	1
Open-End Wrench 30mm	1
Scrap Material or Shop Rag	As Needed

To change cutter:

1. Home all axes (see **Homing Axes** on **Page 30**), then turn machine ***OFF***.

2. DISCONNECT MACHINE FROM POWER!

3. Secure spindle with 21mm open-end wrench (see **Figure 21**).

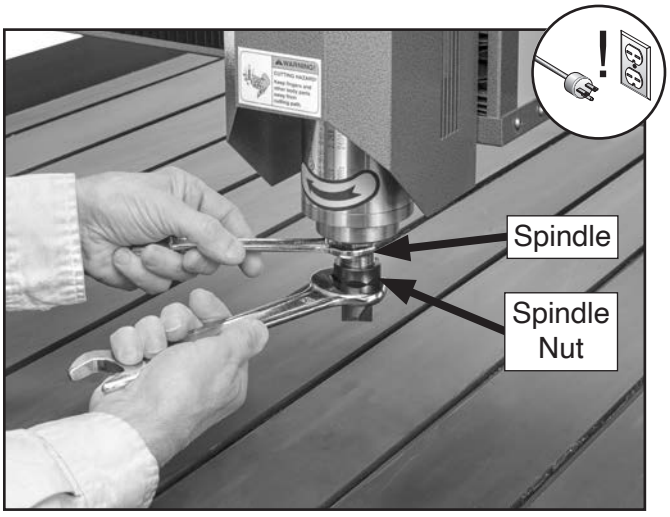

Figure 21. Changing cutter.

4. Place scrap material or shop rag under spindle to catch cutter.

5. Remove spindle nut with 30mm open-end wrench (see **Figure 21**), then remove collet and cutter.

6. Place new cutter in collet, then tighten spindle nut to secure cutter.

Clamping Workpiece

Always secure the workpiece to the table with clamps to avoid injury and damage to the machine and cutter. Always use at least four clamps.

Items Needed **Qty**
Hold-Down Clamps .....4 or more

To clamp workpiece to table:

1. Clear dust, wood chips, and tools from table surface and T-slots.

2. Thread hex bolt into clamp plate, then insert T-bolt through clamp plate and thread flat washer and wing nut (see **Figure 22**).

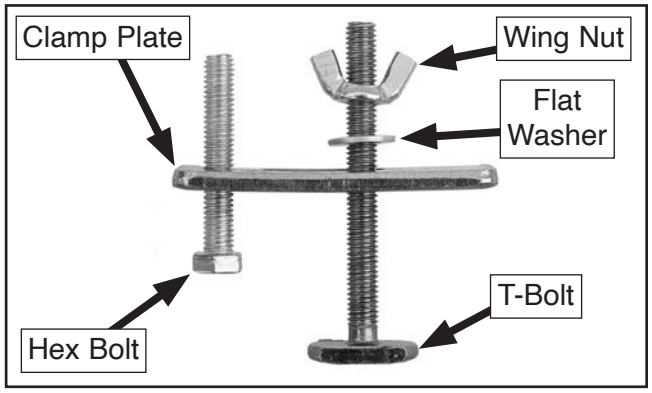

Figure 22. Hold-down clamp components.

3. Place workpiece on table. Joint or shim if necessary to ensure a flat work surface.

4. Slide T-bolts into T-slots, then adjust wing nuts and hex bolts so clamp plates are higher than workpiece (see **Figure 23**).

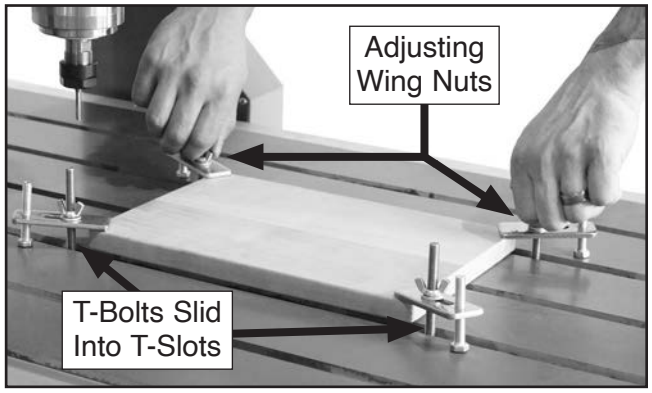

Figure 23. Clamping workpiece to table.

5. Position clamps so workpiece is stable and does not rock. Take into consideration axis positions when G-code runs.

6. Tighten wing nuts until workpiece is secure and flat against table on all four sides/corners.

Using a Spoilboard

A spoilboard should be used on top of the table with any operation the cutter cuts completely through the workpiece. Typically, a spoilboard is made of MDF that has been surfaced perfectly flat. Even a new piece of material should be surfaced before use.

NOTICE

Moisture will swell/warp MDF. Using a damp spoilboard may result in damaged or inaccurately cut workpieces, and damage to the machine. If liquid is spilled on spoilboard, it must be dried and resurfaced, or replaced.

Clamping Spoilboard

Items Needed **Qty**
MDF (sized for table or workpiece) 1
Clamps, Tape, or Wood Screws..... As Needed

To clamp spoilboard:

1. Clamp surfaced spoilboard to machine bed using included hold-down clamps (see **Figure 24**).

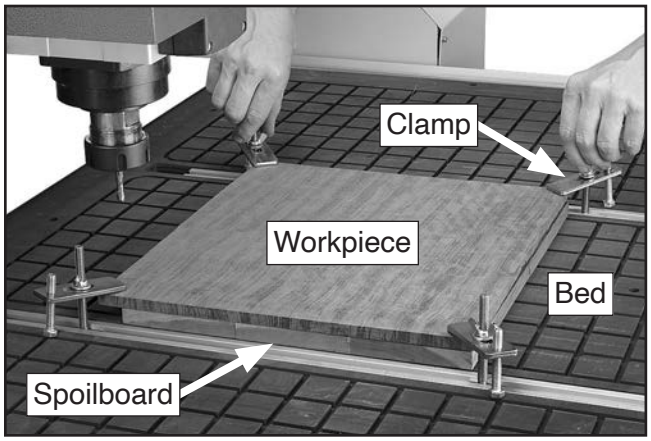

Figure 24. Example of spoilboard clamped to CNC router bed.

2. Secure workpiece to spoilboard.

   Note: *Depending on the needs of the workpiece and G-code, it could be appropriate to use additional hold-down clamps, double-sided tape, or mount the workpiece directly to the spoilboard with screws.*

Surfacing Spoilboard

The G0931 can be used to surface a spoilboard or workpiece using the mill plane feature and an appropriate cutter (see **Choosing Cutter** on **Page 26**).

Items Needed **Qty**
Spoilboard Cutter or Fly Cutter 1

To surface using mill plane operation:

1. Hold down RUN/PAUSE on controller, then press HIGH/LOW and release buttons together to open advanced processing menu.

2. Scroll to "Mill plane" and press OK.

3. Choose "Scan mill" or "Encircle mill" and press OK. Operation parameters will appear.

   Note: *A "Scan mill" operation runs back and forth from one end of the defined workpiece to the other. An "Encircle mill" operation runs from the outside to the inside of the defined workpiece.*

4. Define operation parameters. Press RUN/PAUSE to change a parameter and OK to save. Distances are measured in millimeters.

   — Scan Type changes direction of operation. For scan milling, "X Scan" runs back and forth across X-axis, and "Y Scan" runs back and forth across Y-axis. For encircle milling, "AC" runs counterclockwise around workpiece and "C" runs clockwise around workpiece.

   — Height and Width defines size of area to be surfaced.

   — Diameter defines diameter of surfacing tool used.

   — Depth defines the total depth of material removed. Z Step defines how much material is removed per pass. For example, a Depth of 1 and Z Step of 0.25 would remove 1mm of material over four passes.

5. Press OK after all parameters have been saved to start mill plane operation.

Adjusting Axis Positions Manually

Knowing how to manually control axis movement is an essential part of operating the G0931. Axes must be positioned manually whenever a work origin is set.

Use axis movement buttons on controller (X+, X-, Y+, Y-, Z+, and Z-) to move axes. See **Controller Functions** on **Page 5** for detailed button descriptions.

Manual axis movement can be performed at two speeds and in three motion modes: Continuous, Step, and Distance.

NOTICE

Manual axis movement can move beyond soft limit proximity switches, which can damage the machine. Be aware of axis locations during manual movement, and be prepared to stop machine if axes move unexpectedly.

Changing Axis Movement Speed

1. Press HIGH/LOW to toggle between fast and slow speeds.

Changing Axis Movement Mode

1. Press MODE to toggle between Continuous, Step, and Distance modes.

   — In Continuous mode, press and hold axis movement buttons to move axes. Release button to stop movement.

   — In Step mode, press button to move axis one step. Step size is determined by speed mode.

   — In Distance mode, press button to move axis a user-defined distance. Set distance by toggling to Distance mode, then input distance and press OK. Controller will display current setting.

Homing Axes

Homing the machine returns all three axes to "home" position or the machine-specific zero point. Home is determined by magnetic limit switches and will not change. Since all machine movement is calculated from home, always home axes and verify machine parameters before each operation.

To home axes:

1. Press HOME. Verify all axes move to their farthest positions.

2. Verify all machine parameters listed in **Verifying Parameters** on **Page 23**.

Setting Origin

Work origin is the workpiece-specific zero point, the starting point for the toolpath. All three axes need to be zeroed at the work origin before running code.

The Z-axis can be set in relation to either the table surface or the workpiece surface, but it must correspond to what is established in the G-code. If this is not done properly, the cutter may crash into the material or the table, causing damage to the workpiece or the machine.

NOTICE

Set work origin before each unique operation. The work origin of all axes must match the origin of the toolpath established in the G-code. Failure to set the work origin may cause the cutter to crash and damage the workpiece, machine, or cutter.

Setting Work Origin

1. Clamp workpiece to table, insert cutter, and load G-code onto controller.

2. Manually move X- and Y-axes to toolpath origin established in G-code.

3. Manually move Z-axis down to ⅛" above workpiece or table surface (as determined by G-code).

4. Place piece of paper between cutter tip and surface. Slowly step Z-axis down while sliding paper until paper cannot move.

5. Press XY->0 to set X- and Y-axis origin.

6. Press Z->0 to set Z-axis origin.

Setting Z-Axis Origin With Tool Setter

1. Verify tool setter parameters are correct according to **Verifying Default Parameters** on **Page 23**.

2. Clamp workpiece to table, insert cutter, and load G-code to controller.

3. Place tool setter on top of table or workpiece.

4. Manually move X- and Y-axes so cutter is directly above tool setter (see **Figure 25**).

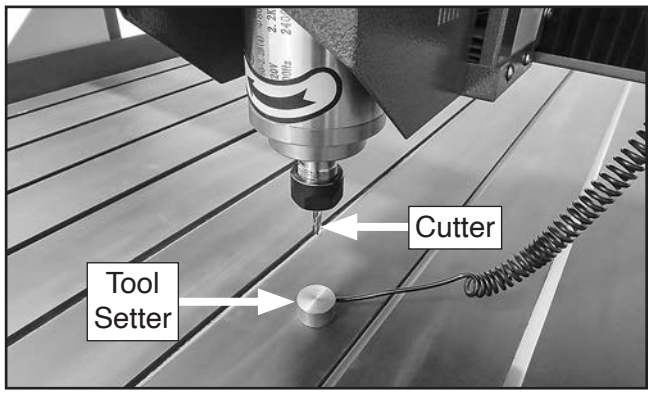

Figure 25. Cutter over tool setter.

5. Hold down MENU button, press ON/OFF button, then release both buttons together. Spindle will lower until cutter reaches tool setter, then raise slightly.

   Note: *Tool setter uses a magnet to determine cutter position. Z-axis origin is set at base of tool setter.*

Creating G-Code File

Before operations can be run on the Model G0931, a toolpath must be designed and converted to G-code. CAM software converts a CAD model into G-code, which defines a toolpath for the project, and then formats the G-code into a machine specific dialect via a post-processor.

This machine *does not* read advanced formatting by default; it only runs letter addresses for simple axis movement. Review **Changing Advanced Settings** on **Page 33** for information about turning on additional G-code functions.

An operator could also write G-code manually. Often, this is more efficient than designing and processing through CAD/CAM. In addition, knowledge of G-code is integral to refining toolpaths produced by CAM software.

Items Needed	**Qty**
CAD/CAM Software or Text Editor	1
USB Drive 16GB or Less	1

To create G-code:

1. Load CAD file into CAM software. Take into consideration what type of material will be cut and what type of cutter will be used. Make note of where you will place clamps.

2. Run post-processing application to export G-code.

   Note: *Use post-processing options specific to the Model G0931 or the RichAuto A11 controller when available. If a post-processor for this machine isn't available, use a post-processor with minimal formatting.*

3. Do a practice run within software to identify any areas of concern (double-check feed/speed rates, depth of cut, and direction cutter will be traveling).

4. Review G-code and simplify code if needed.

5. Export G-code to USB drive in ***.NC***, ***.PLT***, ***.TAP***, or ***.TXT*** format.

Uploading & Running G-Code

IMPORTANT: DO NOT use a USB drive larger than 16GB. The controller is designed to read USB drives formatted below 16GB.

Running G-Code From USB Drive

1. Turn machine ***ON***.

2. Insert USB drive loaded with G-code into controller (see **Figure 26**).

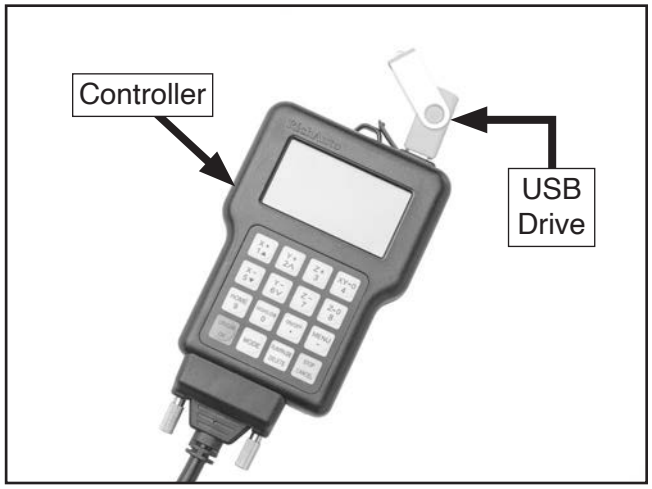

Figure 26. USB drive connected to controller.

3. Press RUN/PAUSE and scroll to "UDisk File", then press OK.

4. Scroll to desired G-code file and press OK.

5. Screen will display "SetWorkParam" and the following parameters:

   — WorkSpd (feed rate in mm/sec.).
   — FastSpd (movement speed between cuts in mm/sec.).
   — SpdScale (spindle speed ratio).
   — FallDown (Z-axis speed ratio).

6. Scroll to desired parameter and press RUN/PAUSE to change value, then press OK.

7. Press OK again to begin operation.

   — Press RUN/PAUSE to pause axis movement. Spindle will continue to spin. Axes can be manually moved while paused. Press RUN/PAUSE again to resume, then OK to resume from new axis position, or STOP to return to original position.

   — Press Y+ and Y- during operation to manually change spindle speed ratio from 0.1 (stopped) to 1.0 (full speed).

   — Press STOP to completely stop operation. Choose between "Save break" to save breakpoint to return to later, or "Discard break" to stop operation without saving. Resume saved processing through the advanced processing menu (see **Using Advanced Controls** on **Page 34**).

Uploading G-Code to Controller Internal Memory

1. Perform **Steps 1–2** of **Running G-Code From USB Drive** on this page.

2. Press MENU, then scroll to "Operate File" on the controller and press OK.

3. Scroll to "Copy File" and press OK.

4. Scroll to "UDisk File" and press OK, then navigate to G-code file and press OK.

5. Once upload is complete, remove USB drive and proceed to **Running G-Code From Controller Internal Memory** on **Page 33**.

Running G-Code From Controller Internal Memory

1. Press RUN/PAUSE.

2. Scroll to "Internal File" and press OK, then scroll to G-code file and press OK.

3. Screen will display "SetWorkParam" and the following parameters:

   — WorkSpd (feed rate in mm/sec.).
   — FastSpd (movement speed between cuts in mm/sec.).
   — SpdScale (spindle speed ratio).
   — FallDown (Z-axis speed ratio).

4. Scroll to desired parameter and press RUN/PAUSE to change value, then press OK.

5. Press OK again to begin operation.

   — Press RUN/PAUSE to pause axis movement. Spindle will continue to spin. Axes can be manually moved while paused. Press RUN/PAUSE again to resume, then OK to resume from new axis position, or STOP to return to original position.

   — Press Y+ and Y- during operation to manually change spindle speed ratio from 0.1 (stopped) to 1.0 (full speed).

   — Press STOP to completely stop operation. Choose between "Save break" to save breakpoint to return to later, or "Discard break" to stop operation without saving. Resume saved processing through the advanced processing menu (see **Using Advanced Controls** on **Page 34**).

Changing Advanced Settings

NOTICE

Changing advanced settings will change the default functions of your machine and how it processes files. Changing advanced settings is only recommended for experienced operators. After changing settings, monitor machine operation carefully to prevent damage to machine, workpiece, or cutter.

Many advanced functions of the G0931 are turned off by default. Notably, S and F letter addresses are ignored until turned on in the controller.

Most advanced settings are accessible through the "AUTO PRO SETUP" menu.

F-Code Processing

1. Press MENU, then scroll to "AUTO PRO SETUP" and press OK.

2. Scroll to "G Code Setup" and press OK.

3. Scroll to "F Read" and press RUN/PAUSE. "Ign F" will change to "Read F". Press OK to save.

S-Code Processing

1. Press MENU, then scroll to "AUTO PRO SETUP" and press OK.

2. Scroll to "G Code Setup" and press OK.

3. Scroll to "S Read" and press RUN/PAUSE. "Ign S" will change to "Read S". Press OK to save.

Using Advanced Controls

All the basic controls of the G0931 are performed through single-button commands on the controller, but some advanced features require multi-button commands to access.

Advanced Processing Menu

Advanced tool functions are accessed through the advanced processing menu. Functions include array work, resuming stopped jobs, surfacing a workpiece, calculating bounds of a file, and calculating processing time of a file.

To access advanced processing menu:

1. Hold down RUN/PAUSE, then press HIGH/LOW and release buttons together.

Switching Coordinate Systems

Up to nine work coordinate systems can be saved at a time. When work origin is set, it is set for the active coordinate system. If the absolute coordinate system is active, work origin cannot be set.

To access advanced processing menu:

1. Hold down MENU, then press one 0-9 number button and release buttons together.

   — Press MENU + 0 to activate absolute coordinate system (mechanical coordinates).

   — Press MENU + 1-9 to activate work coordinate systems.

Manually Setting Spindle Speed

Pressing ON/OFF and Z+ or Z- buttons together while the spindle is running will increase or decrease the spindle speed through a range of eight user-defined speed settings.

This action can be performed any time the spindle is running.

To manually set spindle speeds:

1. Verify S-code processing is turned on (see **S-Code Processing** on **Page 33**).

2. Press MENU, then scroll to "MACHINE SETUP" and press OK.

3. Scroll to "Spindle Setup" and press OK.

4. Scroll to "Spindle State" and press OK.

5. Press STOP button *twice* to access "Spindle Speed" menu.

6. Scroll through each spindle speed and set as desired using RUN/PAUSE button and numbered keys.

   Note: *Set RPM values in ascending order from 1–8. Speed 1 should be set to the lowest RPM value, and Speed 8 should be set to the highest RPM value.*

7. Press OK to save changes.

SECTION 5: ACCESSORIES

⚠WARNING

Installing unapproved accessories may cause machine to malfunction, resulting in serious personal injury or machine damage. To reduce this risk, only install accessories recommended for this machine by Grizzly.

NOTICE

Refer to our website or latest catalog for additional recommended accessories.

V-Carve CNC Router Software
T28100—V-Carve Desktop Software
T28101—V-Carve Pro Software

V-Carve provides a powerful but intuitive software solution for cutting parts on a CNC Router. It combines CAD and CAM so you can design your work and create your toolpath in one interface. V-Carve includes the functionality demanded for complex work while remaining incredibly easy to use and affordably priced.



Figure 27. T28100 V-Carve Desktop Software.

Cutters
C1921—Router Bit Set for Sign Making

These router bits have a long reach, making them excellent for use with sign-making templates. The sheer design allows for smoother cuts and less work on your part making a stellar looking sign. ¼" shank and 2⅜" overall length, this set comes with ¼", ⅜", and ½" sizes.



Figure 28. C1921 Router Bit Set.

T30941—CNC Router Bit Starter Set
T30905—¼" Solid Carbide Upcut Spiral
T30906—¼" Solid Carbide Downcut Spiral

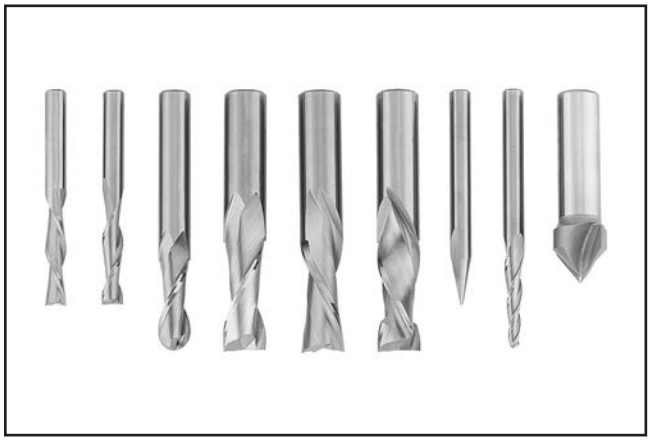

Figure 29. T30941 CNC Router Bit Starter Set.

G0860—1½ HP Portable Cyclone Dust Collector
This compact unit features an impressive 868 CFM and up to 9.7" of static pressure - perfect for handling up to two large machines at once. The 20-gallon collection drum with quick release handle catches large particulate for quick and clean bag changes, and the pleated 1-micron filter captures remaining dust.



Figure 30. G0860 Cyclone Dust Collector.

W1050—Dust Collection Basics Book
This incisive book skillfully guides the woodworker through all the steps necessary in the design and construction of an efficient central dust collection system and tells you what you need to know for easy installation. The text offers practical hints and techniques and takes the mystery, misery and hype away from a subject that should be as clear as the air you breathe. 64 pages of concise, carefully illustrated text.

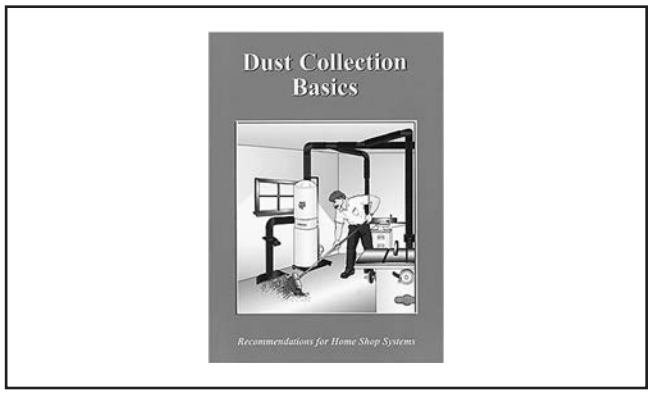

Figure 31. W1050 Dust Collection Basics Book.

D4206—Clear Flexible Hose 4" x 10'
D4256—45° Elbow 4"
W1034—Heavy-Duty Clear Flex Hose 4" x 10'
D2107—Hose Hanger 4 ¼"
W1015—Y-Fitting 4" x 4" x 4"
W1017—90° Elbow 4"
W1019—Hose Coupler (Splice) 4"
W1317—Wire Hose Clamp 4"
W1007—Plastic Blast Gate 4"
W1053—Anti-Static Grounding Kit
Hand-picked selection of commonly used dust collection components for 4" dust ports.



Figure 32. Dust collection accessories.

T27914—Moly-D Machine and Way Oil, 1 Gal.
This ISO 68 machine and way oil is one of the best we have found for maintaining bed ways, sliding ways, gearboxes, and leadscrews. It is extremely tacky and includes the superior friction-reducing compound Moly-D to maximize component life and minimize wear.



Figure 33. T27914 Moly-D Machine and Way Oil.

SB1365—South Bend Way Oil-ISO 68
Engineered for the high pressure exerted on horizontal or vertical ways and slides. Protects against rust and corrosion. Ensures stick-free, smooth motion which maximizes finishes and extends the life of your machine.



Figure 34. SB1365 Way Oil.

Recommended Metal Protectants

G5562—SLIPIT® 1 Qt. Gel
G5563—SLIPIT® 11 Oz. Spray



Figure 35. Recommended products for protecting unpainted cast iron/steel parts on machinery.

T34007—Lumber/Plywood Cart
This cart measures 59½" wide, 45½" deep, and 55" tall, and has a maximum load capacity of 1100 lbs. The cart has four load levels on one side for boards, strips, and other narrow stock, while the other side can be loaded with sheet stock. Includes two swivel casters.



Figure 36. T34007 Lumber/plywood cart.

SECTION 6: MAINTENANCE

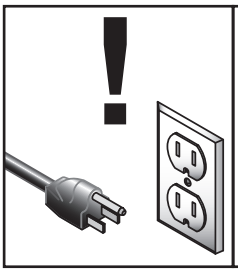

⚠WARNING
To reduce risk of shock or accidental startup, always disconnect machine from power before adjustments, maintenance, or service.

Schedule

For optimum performance from this machine, this maintenance schedule must be strictly followed.

Ongoing
To minimize your risk of injury and maintain proper machine operation, shut down the machine immediately if you ever observe any of the items below, and fix the problem before continuing operations:

- Loose mounting bolts.
- Damaged or dull cutter.
- Clogged or dirty collet, spindle nut, or spindle collet hole.
- Blocked dust collection.
- Worn or damaged wires.
- Low or dirty water in coolant bucket.
- Any other unsafe condition.

Daily Maintenance
- Check tubing and connections for coolant system, and fill water reservoir as needed.

Weekly Maintenance
- Clean cutter.
- Clean/vacuum dust buildup in T-slots.
- Clean/lubricate ball screw and guide rail metal surfaces.
- Inspect spoilboard for defects and flatness.

Monthly Check
- Verify fasteners on moving parts are secure.
- Inspect wiring connections for loose wires.

Cleaning & Protecting

Cleaning the Model G0931 is relatively easy. Use a brush and shop vacuum to remove debris from the table, rails, and machine surfaces. Never blow off the Model G0931 with compressed air, as this could force debris deep into the mechanisms and airborne material fragments may cause injury to yourself or bystanders.

Lubrication

By design, the ball screws, rails, and other metal parts on this machine have hardened surfaces that are highly resistant to corrosion and wear. However, periodically wipe metal parts with light machine oil (see **ACCESSORIES** on **Page 37**) to extend their life.

Note: *Lubrication can cause sludge build-up that will bind moving parts, and corrosion can still occur if catalysts are trapped beneath lubricant. Always clean surfaces before applying any form of lubrication.*

Items Needed	**Qty**
Protective Gloves	1 Pair
Hex Wrench 3mm	1
Stiff Brushes	2
Clean Shop Rags	As Needed
Mineral Spirits	As Needed
T27914 or ISO 68 Equivalent	As Needed

Y-Axis Ball Screw & Guide Rails

Lube Type..... T27914 or ISO 68 Equivalent
Lube Amount..... As Needed
Lubrication Frequency.....Weekly

To clean and lubricate Y-axis ball screw and guide rails:

1. DISCONNECT MACHINE FROM POWER!

2. Clean Y-axis ball screw with brush and mineral spirits to remove grime and old lubrication (see **Figure 37**).



Figure 37. Y-axis ball screw lubrication area.

3. Use clean brush to wipe entire length of ball screw threads with Grizzly T27914 or ISO 68 equivalent.

4. Clean Y-axis guide rail with a clean rag dipped in mineral spirits to remove grime and old lubrication (see **Figure 38**).



Figure 38. Example of Y-axis guide rail components.

5. Use a clean shop rag to wipe entire length of guide rails with Grizzly T27914 or ISO 68 equivalent.

6. Turn machine ***ON*** and move gantry several times over full range of Y-axis travel to spread lubricant and ensure smooth movement.

X-Axis Ball Screw & Guide Rails

Lube Type..... T27914 or ISO 68 Equivalent
Lube Amount..... As Needed
Lubrication Frequency.....Weekly

To clean and lubricate X-axis ball screw and guide rails:

1. DISCONNECT MACHINE FROM POWER!

2. Access X-axis ball screw and guide rails by removing (2) flat head cap screws and flat washers on each outer end of gantry dust covers (see **Figure 39**).

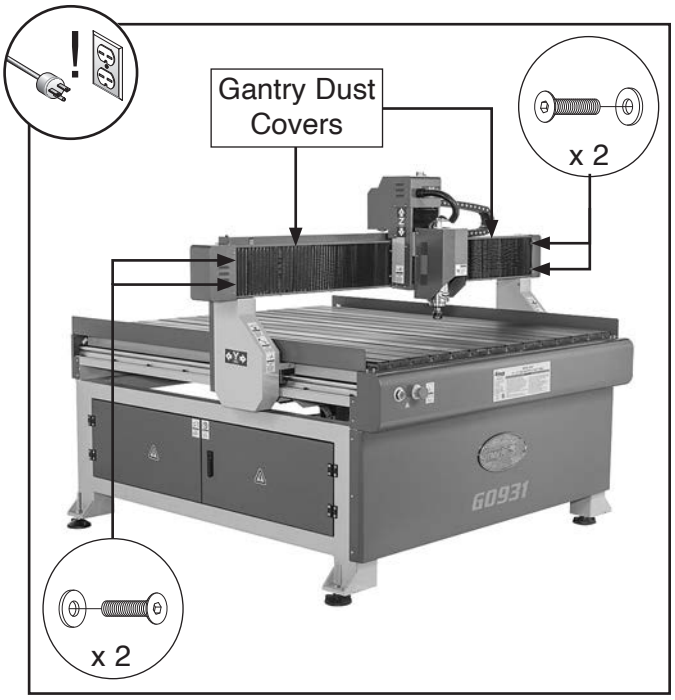

Figure 39. Gantry dust covers location.

3. Pull back gantry dust covers and clean X-axis ball screw with a brush and mineral spirits to remove grime and old lubrication (see **Figure 40**).

4. Clean X-axis guide rails with a clean rag dipped in mineral spirits to remove grime and old lubrication (see **Figure 40**).

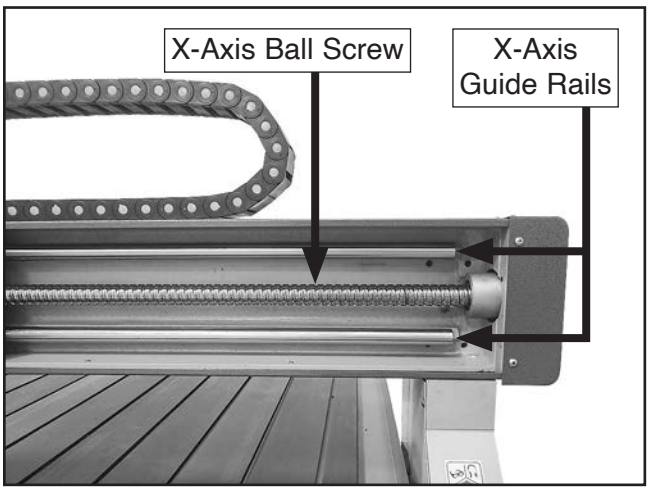

Figure 40. Example of X-axis ball screw and guide rail components.

5. Use clean brush to wipe entire length of ball screw threads with Grizzly T27914 or ISO 68 equivalent.

6. Use clean shop rag to wipe entire length of guide rails with Grizzly T27914 or ISO 68 equivalent.

7. Close gantry dust covers and secure with (4) flat head cap screws and flat washers removed in **Step 2**.

8. Turn machine ***ON*** and move spindle several times over full range of X-axis travel to spread lubricant and ensure smooth movement.

Z-Axis Ball Screw & Guide Rails

Lube Type..... T27914 or ISO 68 Equivalent
Lube Amount..... As Needed
Lubrication Frequency.....Weekly

To clean and lubricate Z-axis ball screw and guide rails:

1. Remove any installed cutters and lower spindle as far as it will go.

2. DISCONNECT MACHINE FROM POWER!

3. Access Z-axis ball screw and guide rails by removing (2) flat head cap screws and flat washers on upper end of spindle dust cover (see **Figure 41**).

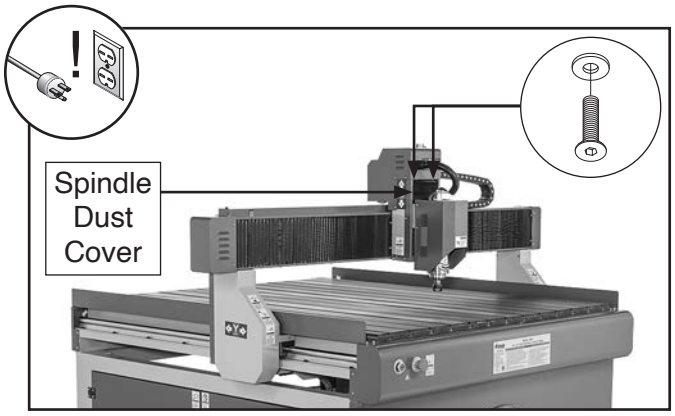

Figure 41. Spindle dust cover location.

4. Pull down spindle dust cover and clean Z-axis ball screw with brush and mineral spirits to remove contamination (see **Figure 42**).

5. Clean Z-axis guide rails with clean rag dipped in mineral spirits to remove grime and old lubrication (see **Figure 42**).

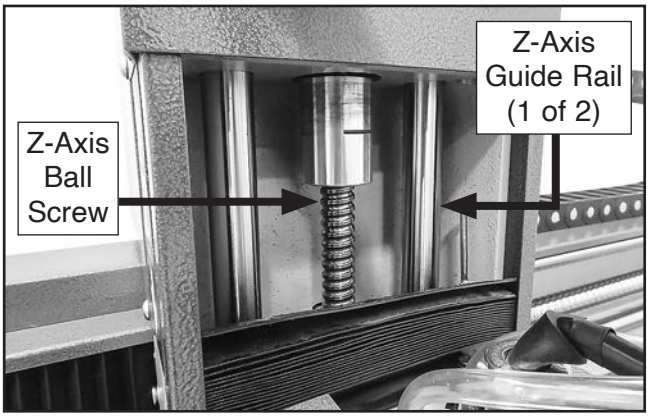

Figure 42. Example of Z-axis ball screw and guide rail components.

6. Use clean brush to wipe entire length of ball screw threads with Grizzly T27914 or ISO 68 equivalent.

7. Use clean shop rag to wipe entire length of guide rails with Grizzly T27914 ISO 68 equivalent.

8. Close spindle dust cover and secure with (2) flat head cap screws and flat washers removed in **Step 3**.

9. Turn machine ***ON*** and move spindle several times over full range of Z-axis travel to spread lubricant and ensure smooth movement.

Coolant

The Model G0931 spindle motor requires a constant flow of coolant to prevent overheating. It is recommended that distilled water be used to prevent mineral buildup inside the system. Monitor water level and cleanliness regularly. Replace water if discolored or if debris is visible.

Coolant Type..... Distilled Water
Coolant Amount ..... 4 Gallons

IMPORTANT: If machine is operated or stored in freezing temperatures, 50/50 anti-freeze should be added to coolant.

SECTION 7: SERVICE

Review the troubleshooting procedures in this section if a problem develops with your machine. If you need replacement parts or additional help with a procedure, call our Technical Support. **Note:** *Please gather the serial number and manufacture date of your machine before calling.*

Troubleshooting

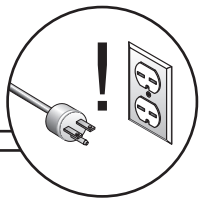

Motor & Electrical

Symptom	Possible Cause	Possible Solution
Machine does not start, or power supply breaker immediately trips after startup.	1. EMERGENCY STOP button depressed/at fault. 2. Blown fuse. 3. Incorrect power supply voltage/circuit size. 4. Electrical cabinet limit switch engaged/at fault. 5. Power supply circuit breaker tripped or fuse blown. 6. Controller/interface board at fault. 7. Control/ground wiring broken, damaged, or disconnected. 8. ON switch at fault. 9. Inverter/contactor at fault. 10. Motor at fault.	1. Rotate EMERGENCY STOP button head to reset. Replace if at fault. 2. Replace fuse/ensure no shorts. 3. Ensure correct power supply voltage/circuit size. 4. Close and secure electrical cabinet/replace switch. 5. Ensure power supply circuit is not overloaded and is free of shorts. Reset circuit breaker or replace fuse. 6. Inspect/replace if at fault. 7. Fix broken/damaged control/ground wires or disconnected/corroded connections. 8. Replace switch. 9. Inspect inverter/contactor; replace if at fault. 10. Test/repair/replace.
Machine stalls or is underpowered.	1. Incorrect power supply voltage or circuit size. 2. Dull cutter or incorrect cutter type for task. 3. Machine undersized for task. 4. Spindle jammed. 5. Spindle motor overheated. 6. Stepper motor at fault. 7. Contactor not energized/at fault. 8. One or more axes ball screw(s)/bearing(s) are damaged or binding.	1. Ensure correct power supply voltage and circuit size. 2. Replace/sharpen cutter. Use proper cutter for cutting task. 3. Use correct cutter/reduce feed rate or depth of cut. 4. DISCONNECT POWER! Turn spindle by hand to identify/fix cause of jam. 5. Check coolant, fill reservoir (**Page 41**). 6. Test wire continuity between stepper motor and stepper driver; repair/replace if at fault. Test/repair/replace stepper motor. 7. Test all legs for power; repair/replace if at fault. 8. Inspect ball screw(s)/bearing(s) on each axis for damage, corrosion, and debris.
Machine has vibration or noisy operation.	1. Incorrect feed rate, spindle speed, or cutter type. 2. Cutter or spindle at fault. 3. Workpiece loose. 4. Bit chattering. 5. Collet at fault. 6. Machine not level.	1. Use correct feed rate and spindle speed; use different cutter. 2. Replace or sharpen cutter; tighten loose spindle; replace defective spindle, collet, or spindle nut (**Page 27**). 3. Secure workpiece with clamps (**Page 28**). 4. Replace/sharpen cutter; index cutter to workpiece; use correct feed rate and spindle speed. 5. Replace collet. 6. Level machine (**Page 18**).

Motor & Electrical (Cont.)

Symptom	Possible Cause	Possible Solution
Machine has vibration or noisy operation.	7. Spindle bearings at fault.	7. Test by rotating spindle; rotational grinding/loose shaft requires bearing replacement.
	8. One or more stepper driver(s) have incorrect DIP switch configuration.	8. Adjust stepper driver DIP switch configuration (**Page 47**).
	9. One or more stepper driver(s) at fault.	9. Test wire continuity between stepper driver and stepper motor; repair/replace if at fault. Test/repair/replace stepper driver.
	10. One or more axes ball screw(s)/bearing(s) are damaged or binding.	10. Inspect ball screw(s)/bearing(s) on each axis for damage, corrosion, and debris.

Machine Operations

Symptom	Possible Cause	Possible Solution
Axis will not move after controller receives commands.	1. One axis not moving.	1. Check connection to motor. Check 50-pin connection to interface board. Adjust stepper driver DIP switch configuration (**Page 47**).
	2. All axes not moving.	2. Inspect 50-pin cable and interface board connection. Inspect power supply to stepper motors. Inspect mechanical components. Adjust stepper driver DIP switch configuration (**Page 47**).
Axis movement and location not repeatable.	1. Ball screws worn. 2. Ball screw/motor coupler worn.	1. Inspect/repair. 2. Inspect/repair.
One or more axes only move in one direction.	1. Interface board/motor connection loose. 2. Incorrect machine parameters. 3. Interface board at fault. 4. Stepper motor at fault. 5. Stepper driver at fault.	1. Inspect connections and ensure all are tight. 2. Verify machine parameters (**Page 23**). 3. Inspect/replace plugs and sockets. 4. Inspect/replace plugs and sockets. 5. Adjust stepper driver DIP switch configuration (**Page 47**).
One or more axes will not move.	1. Direction wire and pulse wire in wrong place on interface board. 2. Stepper motor disconnected. 3. Stepper motor at fault. 4. No pulse signal from interface board.	1. Rewire direction/pulse wiring. 2. Reconnect stepper motor. 3. Inspect/repair/replace. 4. Replace interface board.
Inconsistent cutting depth.	1. Loose cutter. 2. Spoilboard not flat. 3. Z-axis ball screw has too much movement. 4. Workpiece loose. 5. Z-axis tool setter at fault. 6. Z-axis limit switch at fault. 7. CAM/G-code at fault.	1. Tighten spindle collet (**Page 27**). 2. Clean/resurface spoilboard (**Page 28**). 3. Inspect/tighten/replace if needed. 4. Secure workpiece with clamps (**Page 28**). 5. Test/replace. 6. Test (**Page 45**)/replace. 7. Review G-code and correct errors.
Machine fails to home, or moves beyond soft limits when homing.	1. Incorrect machine parameters. 2. Faulty connection. 3. Limit switch not aligned. 4. Loose limit switch wire. 5. Limit switch at fault. 6. Interface board at fault. 7. 50-pin data cable at fault.	1. Verify machine parameters (**Page 23**). 2. Find/secure connection. 3. Inspect/adjust limit switch. 4. Secure connection. 5. Test (**Page 45**)/repair/replace limit switch. 6. Inspect/replace if needed. 7. Replace cable.

Machine Operations (Cont.)

Symptom	Possible Cause	Possible Solution
Finished workpiece incorrect size.	1. Pulse equivalent incorrect. 2. Incorrect cutter. 3. CAD/CAM dimensional or tooling errors.	1. Verify controller parameters and update pulse equivalent (**Page 23**). 2. Use correct cutter for job. 3. Correct CAD/CAM errors as needed.
Spindle moves in opposite direction when homing.	1. Faulty connection between limit switch and interface board. 2. Homing direction set incorrectly in controller. 3. Limit switch at fault. 4. Electrical interference triggering limit switch. 5. Interface board at fault. 6. 50-pin data cable at fault.	1. Test wiring to locate bad connection. 2. Input correct homing parameters (**Page 23**). 3. Test (**Page 45**)/replace limit switch. 4. Test wiring and isolate strong interference signals from electrical currents and ground. 5. Replace interface board. 6. Replace 50-pin data cable.

Controller Operations

Symptom	Possible Cause	Possible Solution
Controller display shows "out of soft limits error".	1. Toolpath outside of working envelope. 2. Toolpath too large for working envelope. 3. Work origin incorrect in G-code. 4. Incorrect machine parameters. 5. Incorrect coordinate system in CAM software.	1. Reset work origin and secure workpiece so toolpath falls within working envelope. 2. Revise toolpath/break up toolpath into multiple sections. 3. Revise toolpath. 4. Verify machine parameters (**Page 23**). 5. Set correct coordinates in CAM software.
Controller not processing correctly.	1. Incompatible G-code file. 2. Electrical interference. 3. Incorrect machine parameters. 4. Incompatible post-processor.	1. Reformat G-code and re-upload to controller. 2. Test wiring and isolate strong interference signals from electrical currents and ground. 3. Verify machine parameters (**Page 23**). 4. Use compatible post-processor. In V-Carve, select "RichAuto A11 DSP" from the drop-down menu.
Controller screen is dim.	1. Power supply disconnected or damaged. 2. Power supply voltage too high for controller. 3. 50-pin cable at fault. 4. Display at fault.	1. Inspect/replace power supply. 2. Use correct power supply. High voltage may damage controller; replace if needed. 3. Inspect/clean plugs and sockets and retry. Replace if bad. 4. Replace controller.
Controller display is blank, flickers, or restarts.	1. Faulty controller connection. 2. Incorrect power supply voltage or circuit size. 3. Controller at fault. 4. Display at fault.	1. Inspect/clean plugs and sockets and retry. Replace if faulty. 2. Ensure correct power supply voltage and circuit size. 3. Update controller software (**Page 46**). 4. Replace controller.
Controller screen says spindle is ***ON*** when spindle is ***OFF*** and spindle is ***OFF*** when spindle is ***ON***.	1. Wrong connections at interface board.	1. Rewire interface board.

Testing Limit Switches

If the Model G0931 is no longer homing properly, or one or more axes is unresponsive, test each limit switch for proper operation.

Item Needed	Qty
Scrap Iron or Steel	1
Multimeter	1

To test limit switch:

1. Turn machine ***ON*** and press OK at "HomeTypeAtStart" to home all axes.

— If machine *does* home properly, all limit switches are working correctly.

— If machine *does not* home properly, proceed to **Step 2**.

2. Press STOP, then press MENU *twice* to access voltage parameter screen shown in **Figure 43**.

Voltage Parameters							
1	2	3	4	5	6	7	8
↓	↓	↓	↑	↓	↓	↓	↓
1	2	3	4	5	6	7	8
↓	↓	↓	↓	↓	↓	↓	↓

Figure 43. Voltage parameter screen.

3. Touch each limit switch target with a scrap piece of iron or steel (see **Figure 44**).

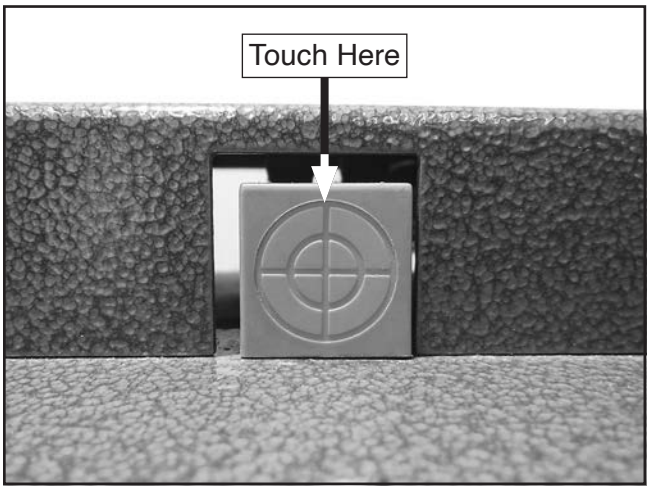

Figure 44. Limit switch target.

4. Verify direction of arrow below each of the top row axes 1–3 (1=X-axis, 2=Y-axis, and 3=Z-axis) in **Figure 43**, ensuring each points up when corresponding limit switch target is touched.

— If arrow *does* point up, and test light on limit switch *does* illuminate, limit switch is working properly. Proceed to **Troubleshooting** on **Page 42** and test additional control systems.

— If arrow *does not* point up, and test light on limit switch *does not* illuminate, proceed to **Step 5**.

Note: *Limit switches have a red light that will illuminate when the limit switch is activated.*

5. DISCONNECT MACHINE FROM POWER!

6. Use a multimeter to check continuity between limit switches and interface board terminals (see **Figure 45**).

   — If continuity *is* confirmed between limit switches and interface board, proceed to **Step 7**.

   — If continuity *is not* confirmed between limit switches and interface board, repair wiring, then repeat **Steps 1–6**.

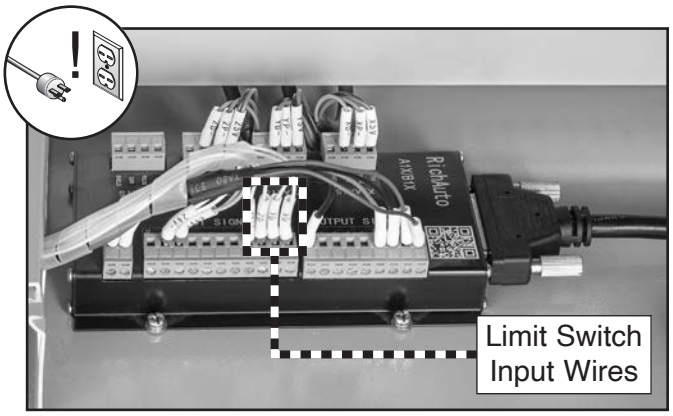

Figure 45. Interface board limit switch input wires.

7. Swap faulty axis limit switch input wire on interface board (see **Figure 46**) with any one of the known good axes input wires (X1=X-axis, X2=Y-axis, X3=Z-axis).

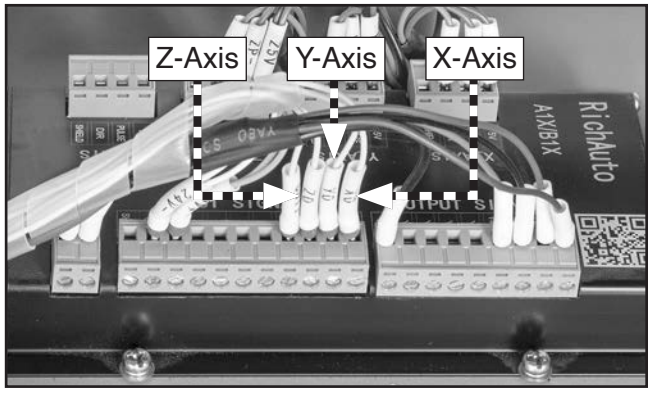

Figure 46. Interface board limit switch axes.

8. Perform **Steps 1–3** on **Page 45** and verify test results.

   — If arrow *does* point up on axis swapped in **Step 7**, replace faulty limit switch.

   — If arrow *does not* point up on axis swapped in **Step 7**, replace interface board.

Updating RichAuto Controller Software

If the RichAuto controller displays a blank screen, the installed A11E software may need to be re-installed to display correctly.

NOTICE

Contact Technical Support to have a software update file sent directly to you. DO NOT install unsupported software or the controller may function erratically.

Items Needed	Qty
RichAuto A11E Software File (***.PKG*** Format)	1
USB Drive 16GB or Less	1

IMPORTANT: DO NOT use a USB drive larger than 16GB. The controller is designed to read USB drives formatted below 16GB.

To update controller using USB drive:

1. Copy software file (***.PKG*** format) to USB drive, then connect USB drive to controller.

2. Press and hold OK button, then turn controller ***ON***.

   Note: *Update can be performed at the CNC router, or by using the included USB-B cable connected to a computer.*

3. When controller displays "Emergency State" screen, scroll to "Update System" and press OK button.

4. At "SelectUpdateFile" screen, scroll to "UDisk File" and press OK.

5. Select ***.PKG*** update file and press OK.

6. Once update is complete, restart controller.

7. Verify machine parameters on controller match those shown on **Page 23**.

Setting Stepper Driver DIP Switches

The DIP (Dual In-line Package) switches on the stepper drivers control the step size, current, and speed of the stepper motors. If the DIP switches are not configured properly, erroneous signals will cause the stepper motors to function incorrectly.

To set stepper driver DIP switches:

1. DISCONNECT MACHINE FROM POWER!

2. Open electrical cabinet and locate (3) stepper driver DIP switches (see **Figure 47**).

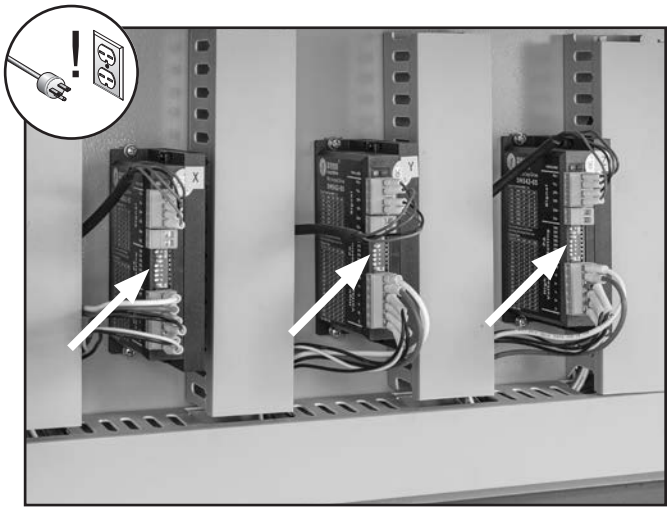

Figure 47. Example of stepper driver DIP switch locations.

3. Compare each stepper driver DIP switch configuration to diagram in **Figure 48**.

   — If DIP switch *does* match diagram, DIP switch is set correctly.

   — If DIP switch *does not* match diagram, flip individual rocker switches until DIP switch matches diagram.

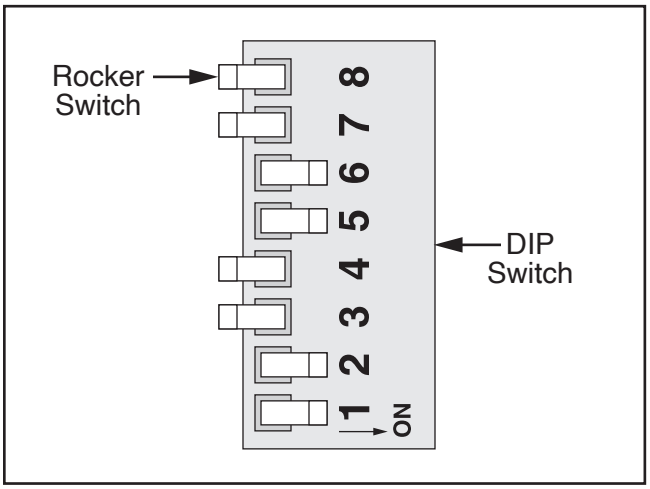

Figure 48. DIP switch configuration.

4. Close electrical cabinet and proceed to **Test Run** on **Page 22** to verify machine functions properly.

SECTION 8: WIRING

These pages are current at the time of printing. However, in the spirit of improvement, we may make changes to the electrical systems of future machines. Compare the manufacture date of your machine to the one stated in this manual, and study this section carefully.

If there are differences between your machine and what is shown in this section, call Technical Support at (570) 546-9663 for assistance BEFORE making any changes to the wiring on your machine. An updated wiring diagram may be available. **Note:** *Please gather the serial number and manufacture date of your machine before calling. This information can be found on the main machine label.*

⚠WARNING
Wiring Safety Instructions

SHOCK HAZARD. Working on wiring that is connected to a power source is extremely dangerous. Touching electrified parts will result in personal injury including but not limited to severe burns, electrocution, or death. Disconnect the power from the machine before servicing electrical components!

MODIFICATIONS. Modifying the wiring beyond what is shown in the diagram may lead to unpredictable results, including serious injury or fire. This includes the installation of unapproved aftermarket parts.

WIRE CONNECTIONS. All connections must be tight to prevent wires from loosening during machine operation. Double-check all wires disconnected or connected during any wiring task to ensure tight connections.

CIRCUIT REQUIREMENTS. You MUST follow the requirements at the beginning of this manual when connecting your machine to a power source.

WIRE/COMPONENT DAMAGE. Damaged wires or components increase the risk of serious personal injury, fire, or machine damage. If you notice that any wires or components are damaged while performing a wiring task, replace those wires or components.

MOTOR WIRING. The motor wiring shown in these diagrams is current at the time of printing but may not match your machine. If you find this to be the case, use the wiring diagram inside the motor junction box.

CAPACITORS/INVERTERS. Some capacitors and power inverters store an electrical charge for up to 10 minutes after being disconnected from the power source. To reduce the risk of being shocked, wait at least this long before working on capacitors.

EXPERIENCING DIFFICULTIES. If you are experiencing difficulties understanding the information included in this section, contact our Technical Support at (570) 546-9663.

NOTICE

The photos and diagrams included in this section are best viewed in color. You can view these pages in color at www.grizzly.com.

COLOR KEY

BLACK	Bk	BLUE	Bl	YELLOW	Yl	LIGHT BLUE	Lb
WHITE	Wt	BROWN	Br	YELLOW GREEN	Yg	BLUE WHITE	Bw
GREEN	Gn	GRAY	Gy	PURPLE	Pu	TURQUOISE	Tu
RED	Rd	ORANGE	Or	PINK	Pk		

Spindle Wiring Diagram

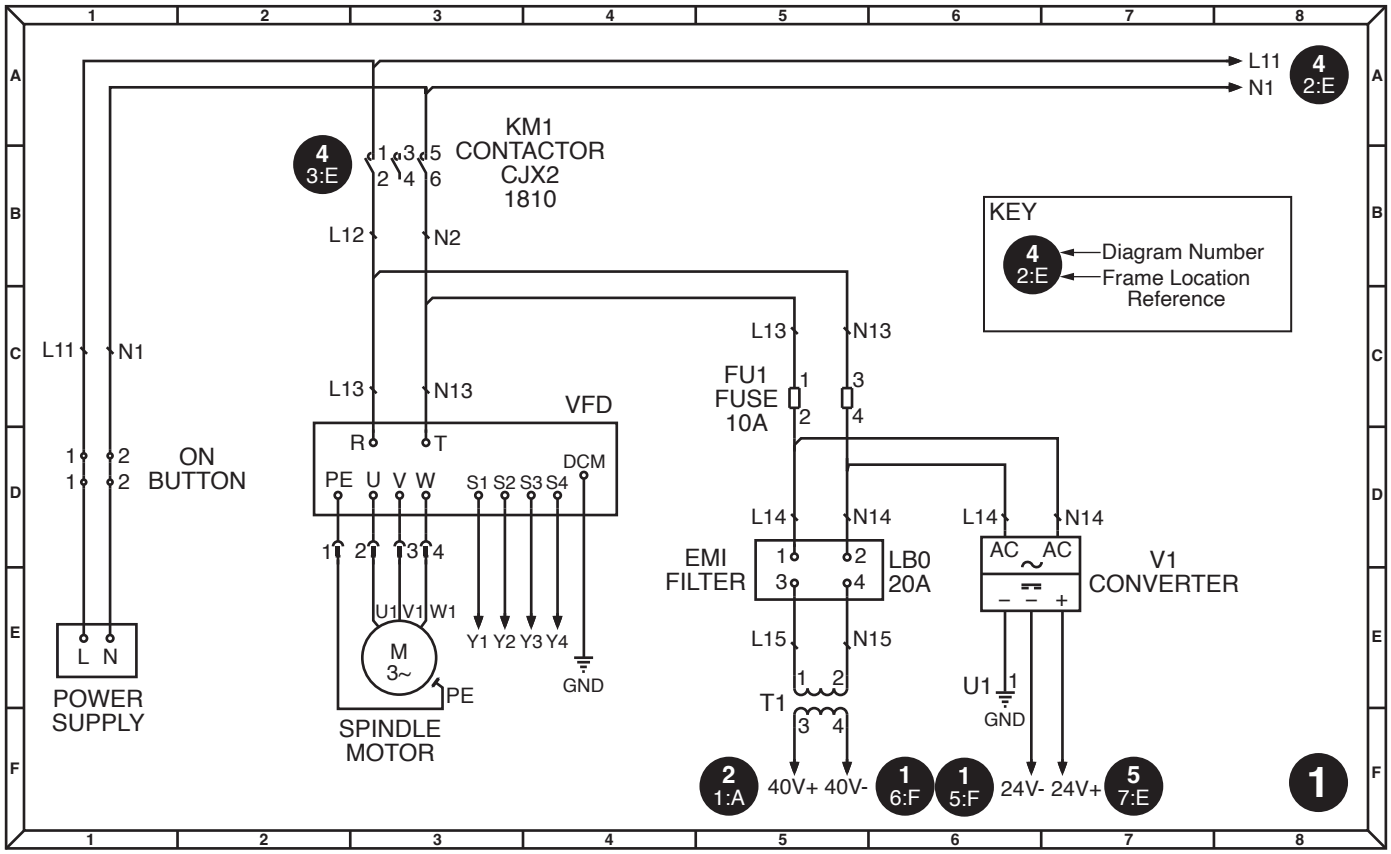



Figure 49. EMERGENCY STOP and ON buttons.

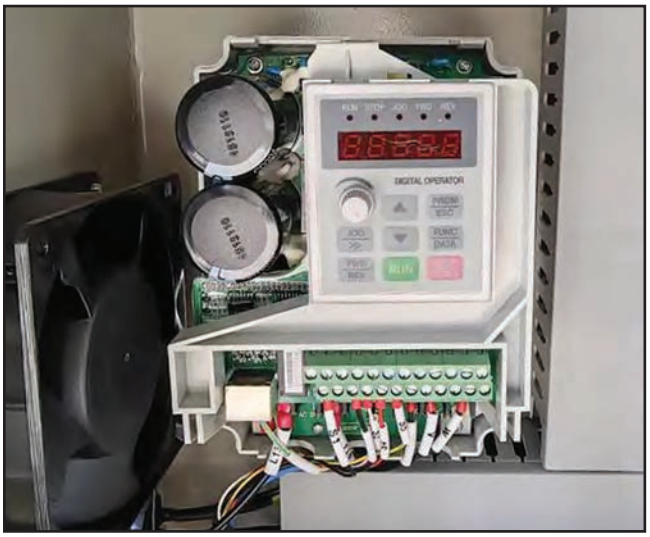

Figure 50. VFD wiring.

Axis Motor Wiring Diagram

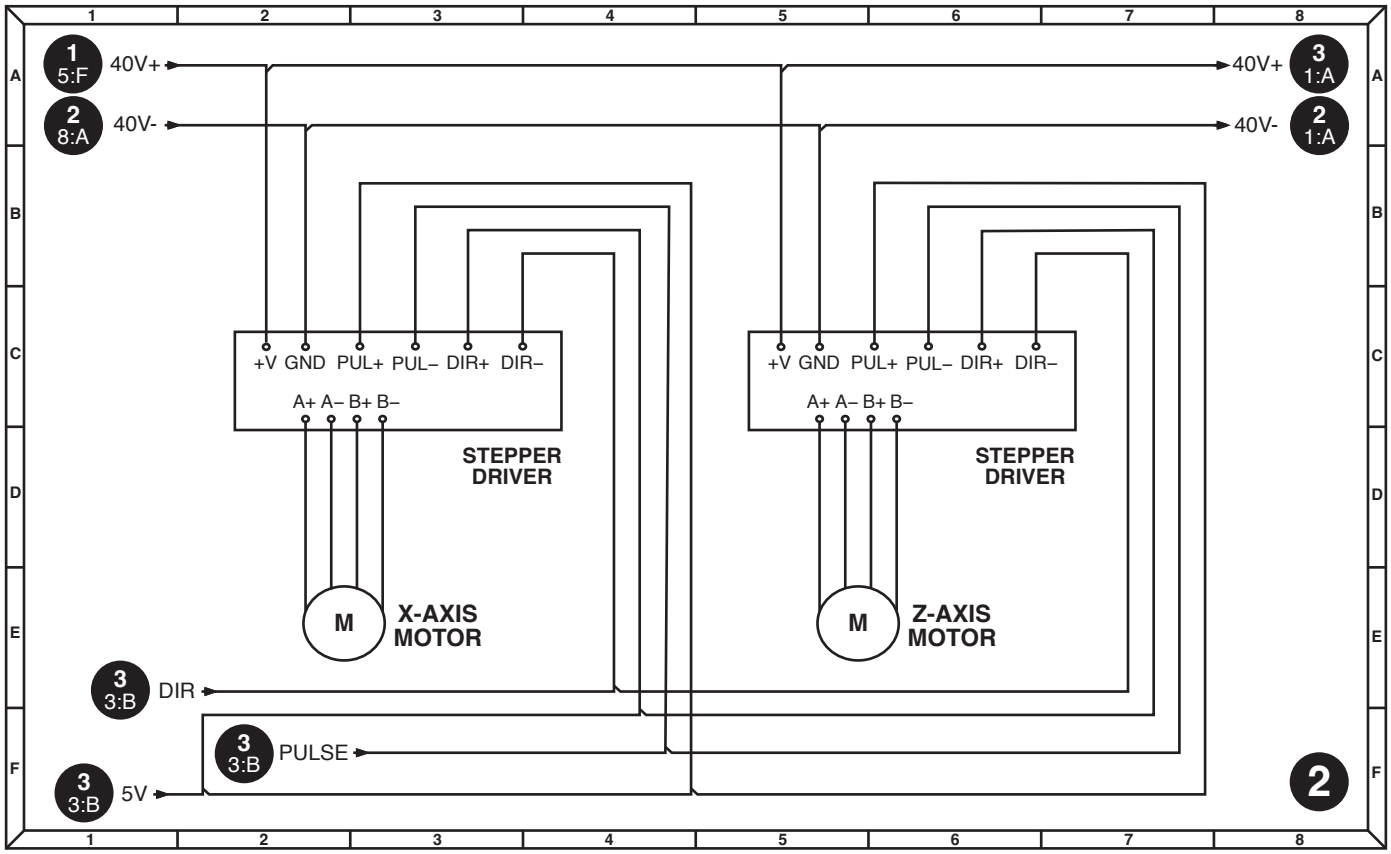

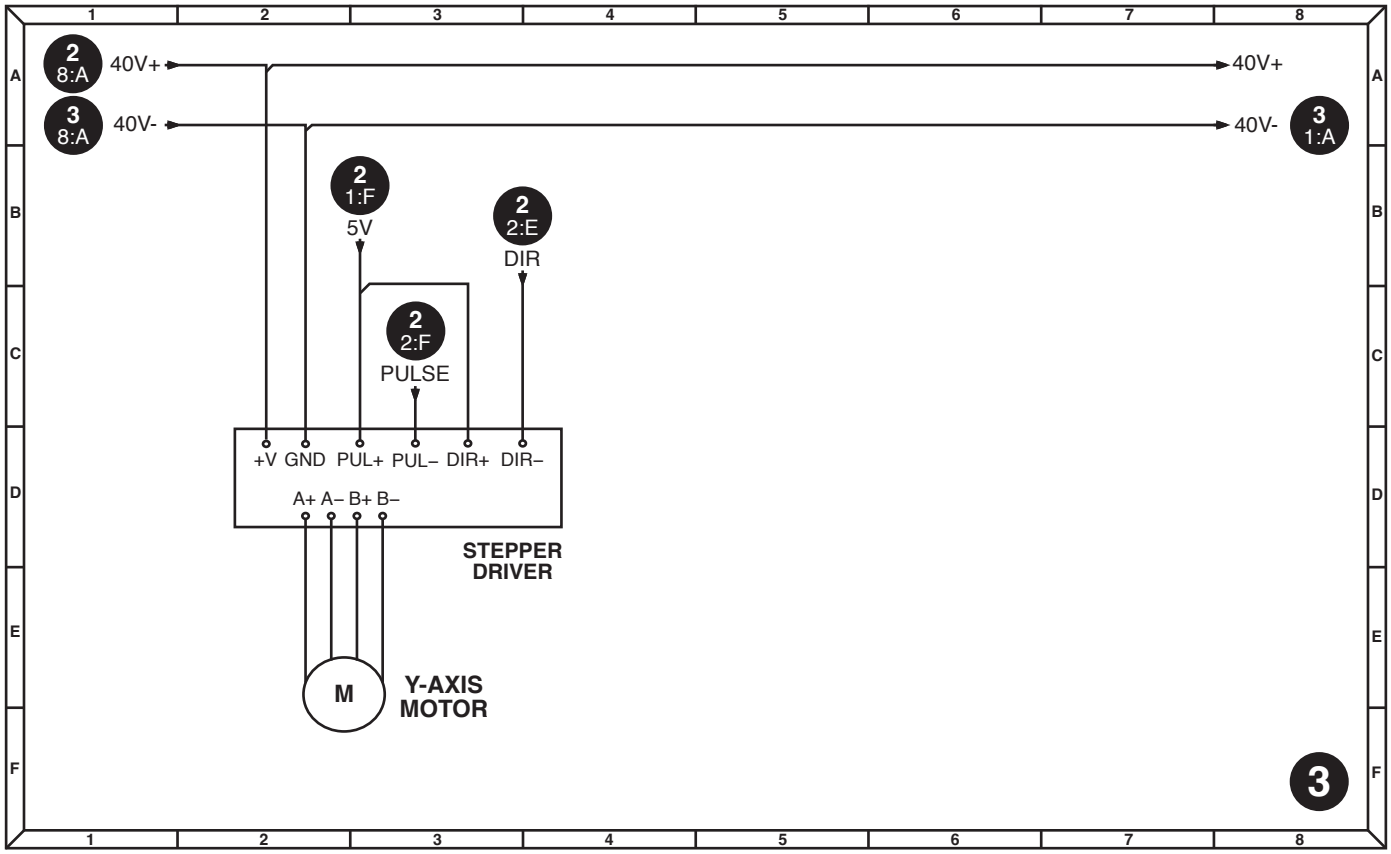

READ ELECTRICAL SAFETY ON PAGE 48!

Contactor Wiring Diagram

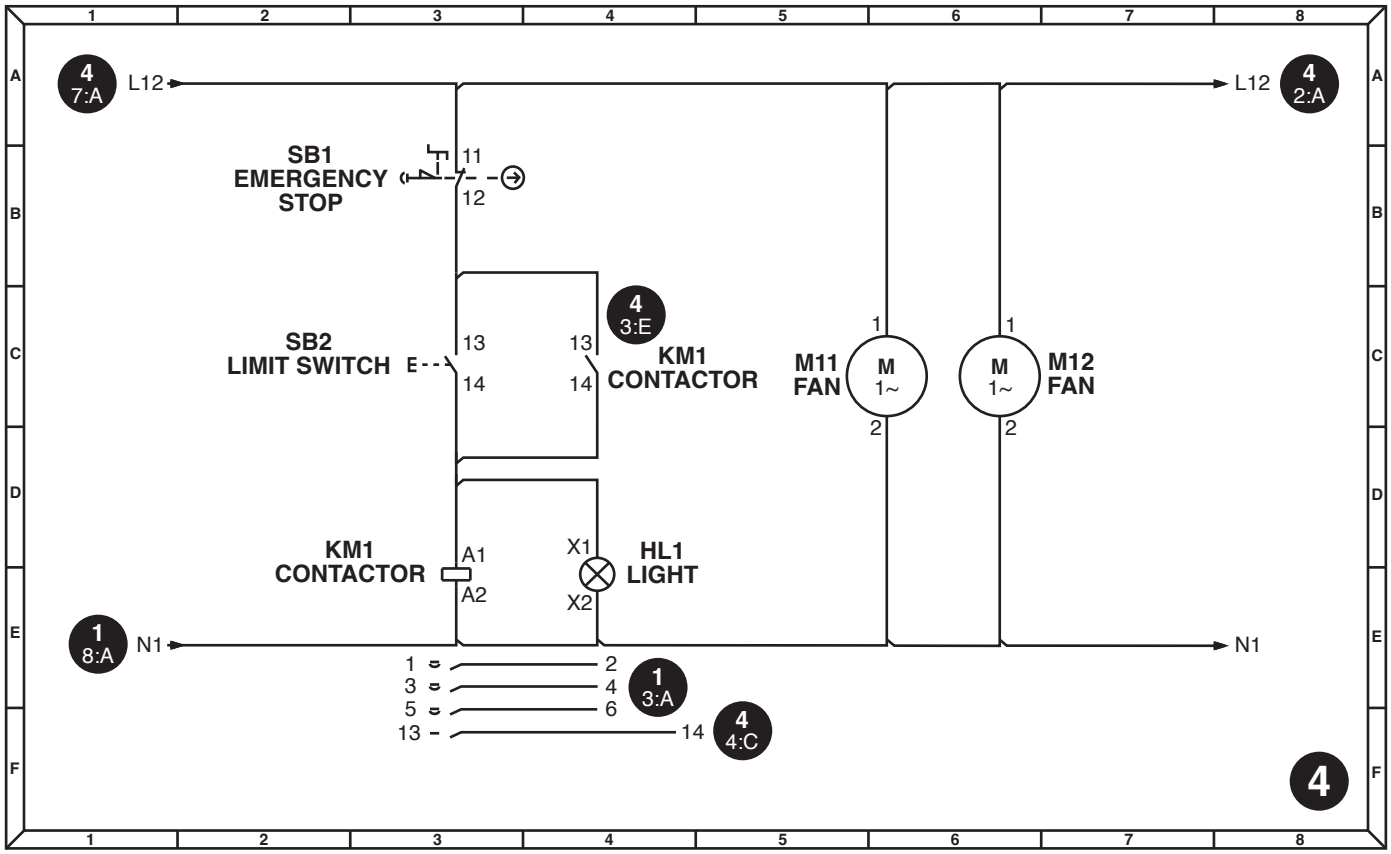

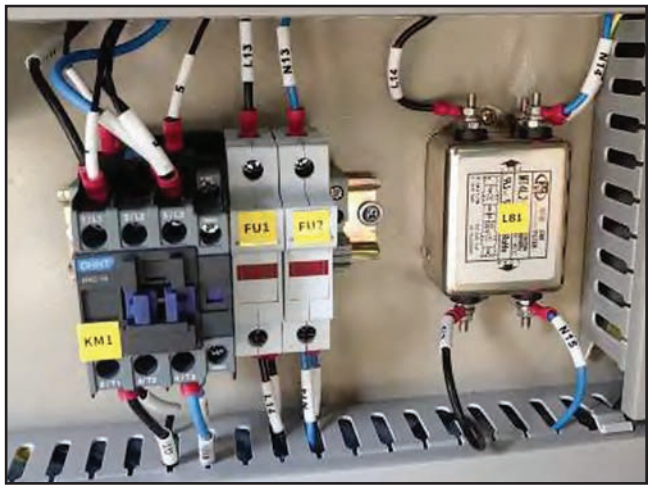

Figure 51. Contactor, fuse holders, and EMI filter.



Figure 52. Electrical cooling fan locations.

Interface Board Wiring Diagram

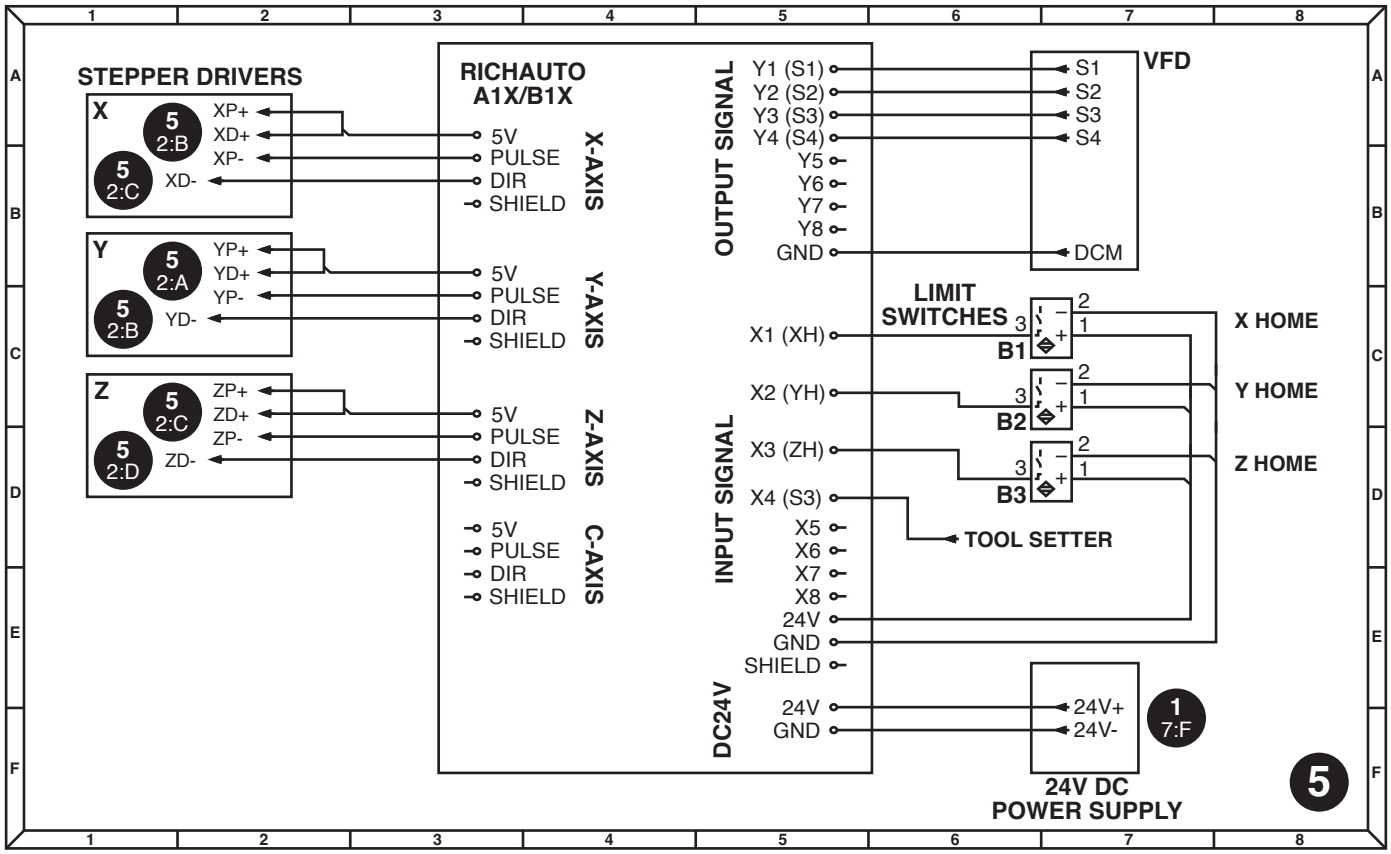

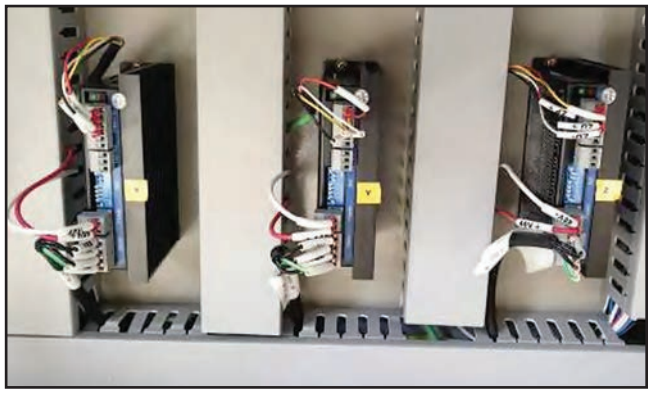

Figure 53. Stepper drivers.

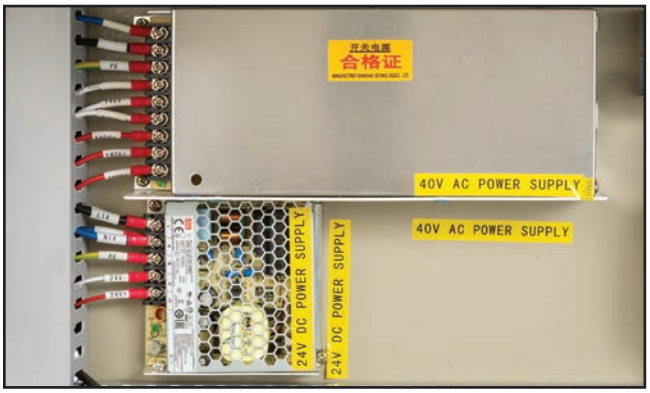

Figure 55. 40VAC/24VDC power supplies.

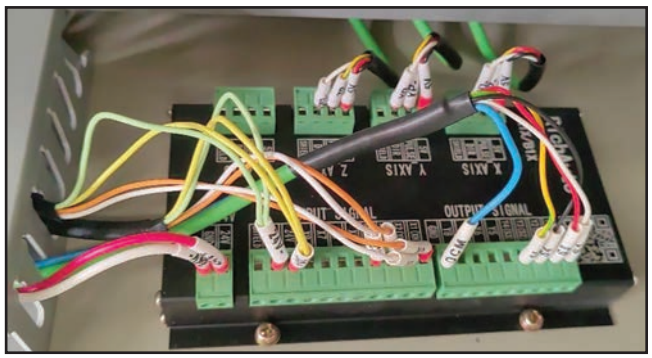

Figure 54. RichAuto interface board.

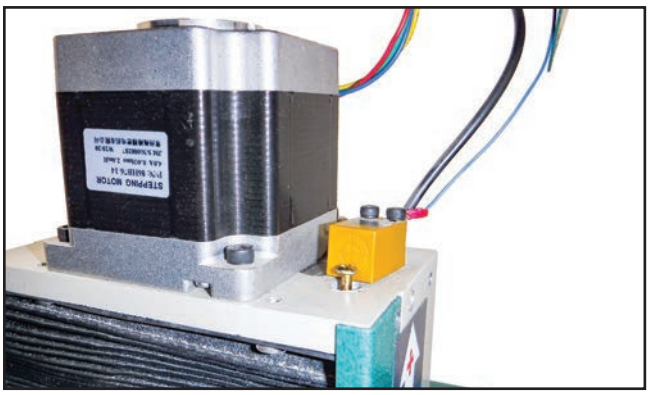

Figure 56. Z-axis motor and limit switch.

STOP *READ ELECTRICAL SAFETY ON PAGE 48!*

Electrical Components



Figure 57. Spindle motor and Z-axis tool setter.



Figure 58. X-axis limit switch.



Figure 59. Y-axis limit switch.

SECTION 9: PARTS

We do our best to stock replacement parts when possible, but we cannot guarantee that all parts shown are available for purchase. Call **(800) 523-4777** or visit **www.grizzly.com/parts** to check for availability.

Main

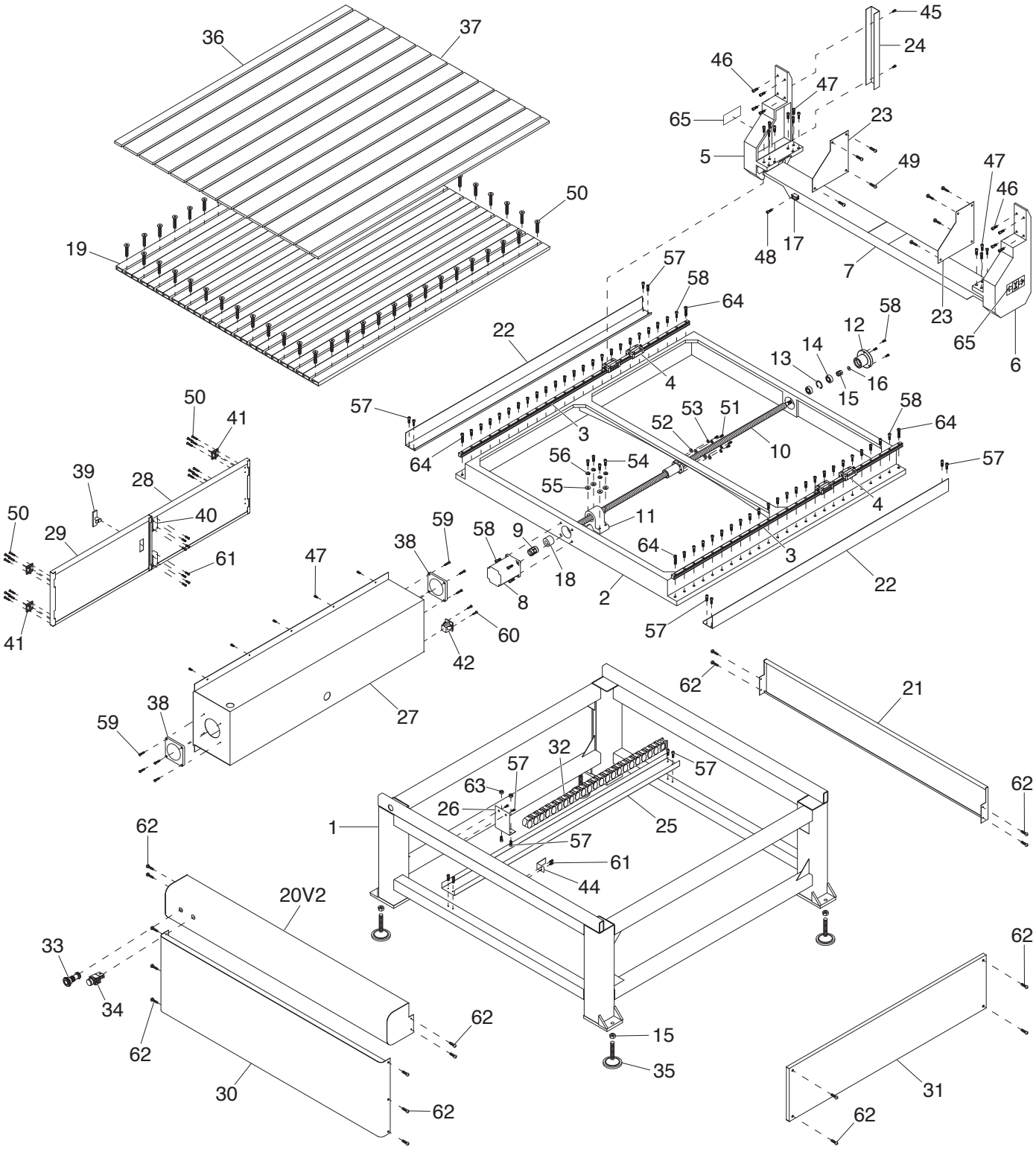

BUY PARTS ONLINE AT GRIZZLY.COM!
Scan QR code to visit our Parts Store.

Main Parts List

REF	PART #	DESCRIPTION
1	P0931001	MACHINE BODY
2	P0931002	BED FRAME
3	P0931003	LINEAR GUIDEWAY PMI MSA20-1470
4	P0931004	GUIDEWAY CARRIAGE MSA20A
5	P0931005	GANTRY SUPPORT COLUMN LEFT
6	P0931006	GANTRY SUPPORT COLUMN RIGHT
7	P0931007	GANTRY SUPPORT BRACKET
8	P0931008	STEPPER MOTOR 86HB76-14
9	P0931009	FLEXIBLE SHAFT COUPLER 14 X 15MM
10	P0931010	BALL SCREW TBI SFU2510-1420
11	P0931011	BALL SCREW NUT
12	P0931012	BALL SCREW BEARING NUT
13	P0931013	INT RETAINING RING 22MM
14	P0931014	BALL BEARING 6202ZZ
15	P0931015	HEX NUT M16-2
16	P0931016	FLAT WASHER 16MM SS
17	P0931017	PROXIMITY SWITCH OMRON TL-Q5MCI-Z
18	P0931018	LIMIT BUSHING
19	P0931019	ROUTER BED
20V2	P0931020V2	FRONT COVER V2.07.21
21	P0931021	REAR COVER
22	P0931022	DUST COVER
23	P0931023	COLUMN GUARD
24	P0931024	CABLE COVER
25	P0931025	CABLE CARRIER TRACK
26	P0931026	CABLE CARRIER MOUNT
27	P0931027	ELECTRICAL CABINET
28	P0931028	ELECTRICAL CABINET DOOR LEFT
29	P0931029	ELECTRICAL CABINET DOOR RIGHT
30	P0931030	FRONT GUARD COVER
31	P0931031	SIDE GUARD COVER
32	P0931032	CABLE CARRIER

REF	PART #	DESCRIPTION
33	P0931033	E-STOP BUTTON YJ139-XB2 30MM
34	P0931034	ON BUTTON YJ139-LA38 30MM GRN
35	P0931035	LEVELING FOOT
36	P0931036	NARROW TABLE SLAT
37	P0931037	WIDE TABLE SLAT
38	P0931038	ELECTRICAL FAN COVER
39	P0931039	SWING-HANDLE DOOR LOCK
40	P0931040	SPRING-LOADED SLIDE-BOLT LATCH
41	P0931041	DOOR HINGE
42	P0931042	POWER RECEPTACLE 250V IEC C14
44	P0931044	PROXIMITY SWITCH BRACKET
45	P0931045	SHOULDER SCREW M6-1 X 24, 6 X 24
46	P0931046	CAP SCREW M8-1.25 X 28
47	P0931047	CAP SCREW M6-1 X 20
48	P0931048	CAP SCREW M4-.7 X 25
49	P0931049	BUTTON HD CAP SCR M5-.8 X 10
50	P0931050	FLAT HD CAP SCR M5-.8 X 12
51	P0931051	CAP SCREW M6-1 X 30
52	P0931052	FLAT WASHER 6MM
53	P0931053	LOCK WASHER 6MM
54	P0931054	CAP SCREW M8-1.25 X 34
55	P0931055	FLAT WASHER 8MM
56	P0931056	LOCK WASHER 8MM
57	P0931057	CAP SCREW M5-.8 X 10
58	P0931058	CAP SCREW M5-.8 X 20
59	P0931059	FLAT HD SCR M5-.8 X 10
60	P0931060	PHLP HD SCR M4-.7 X 10
61	P0931061	CAP SCREW M4-.7 X 10
62	P0931062	BUTTON HD CAP SCR M5-.8 X 8
63	P0931063	HEX NUT M5-.8
64	P0931064	CAP SCREW M8-1.25 X 35
65	P0931065	Y-AXIS MOVEMENT LABEL

BUY PARTS ONLINE AT GRIZZLY.COM!
Scan QR code to visit our Parts Store.

Gantry & Spindle

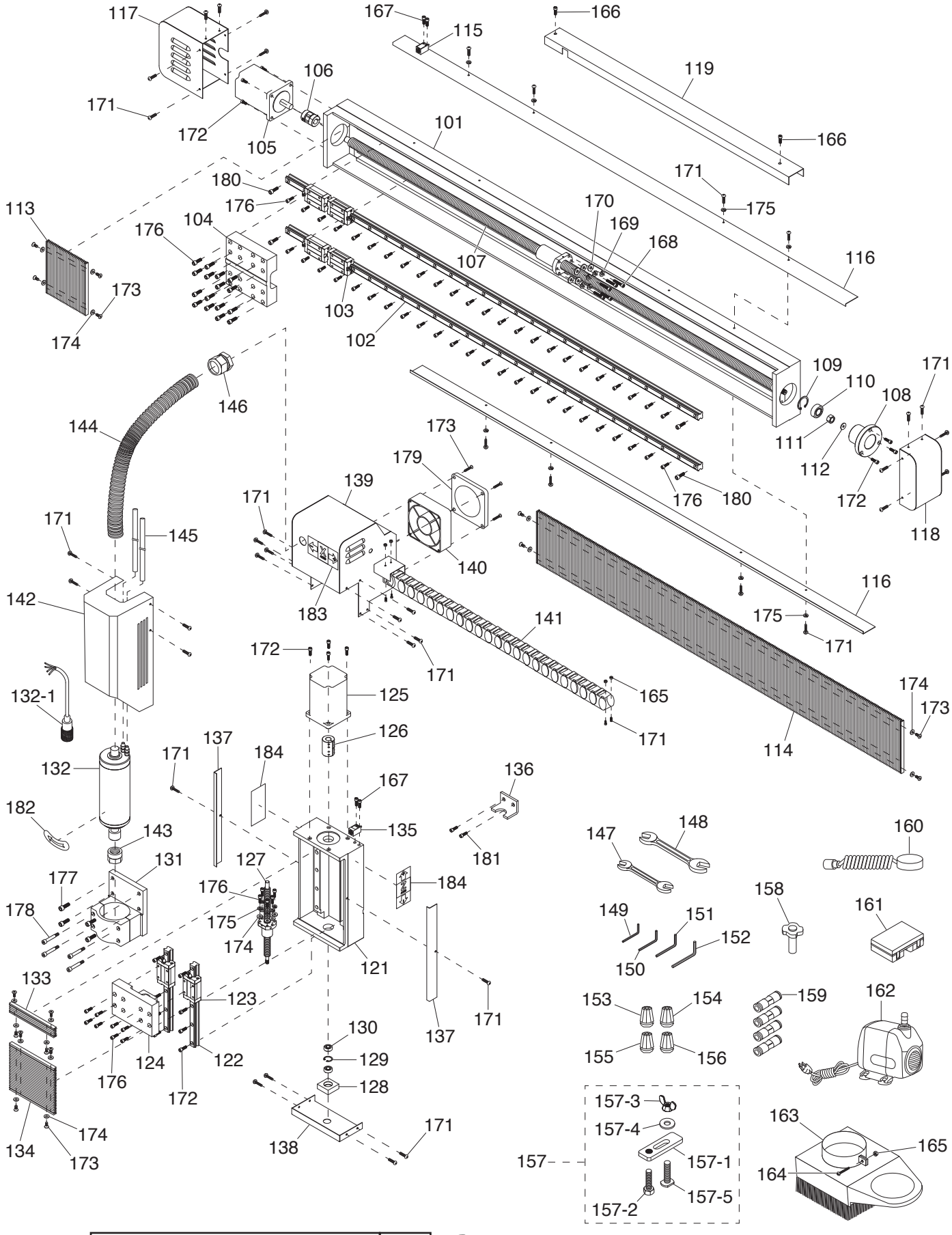

BUY PARTS ONLINE AT GRIZZLY.COM!
Scan QR code to visit our Parts Store.

Gantry & Spindle Parts List

REF	PART #	DESCRIPTION
101	P0931101	GANTRY BODY
102	P0931102	LINEAR GUIDEWAY PMI MSA20-1520
103	P0931103	GUIDEWAY CARRIAGE MSA20S
104	P0931104	SPINDLE HEAD MOUNT
105	P0931105	STEPPER MOTOR 86HB76-14
106	P0931106	FLEXIBLE SHAFT COUPLER 14 X 15MM
107	P0931107	BALL SCREW TBI SFU2519-1620
108	P0931108	BALL SCREW BEARING NUT
109	P0931109	INT RETAINING RING 22MM
110	P0931110	BALL BEARING 6202ZZ
111	P0931111	HEX NUT M16-2
112	P0931112	FLAT WASHER 16MM SS
113	P0931113	GANTRY DUST COVER LEFT
114	P0931114	GANTRY DUST COVER RIGHT
115	P0931115	PROXIMITY SWITCH OMRON TL-Q5MCI-Z
116	P0931116	DUST COVER BAFFLE
117	P0931117	STEPPER MOTOR COVER LEFT
118	P0931118	STEPPER MOTOR COVER RIGHT
119	P0931119	CABLE GUARD
121	P0931121	SPINDLE HEAD BODY
122	P0931122	LINEAR GUIDEWAY PMI MSA20-260
123	P0931123	GUIDEWAY CARRIAGE MSA20S
124	P0931124	SPINDLE MOTOR MOUNT
125	P0931125	STEPPER MOTOR 86HB76-14
126	P0931126	RIGID SHAFT COUPLING 10 X 14MM
127	P0931127	BALL SCREW TBI SFU1605-262
128	P0931128	BALL SCREW BEARING NUT
129	P0931129	INT RETAINING RING 22MM
130	P0931130	BALL BEARING 608ZZ
131	P0931131	SPINDLE HOLDER 80MM
132	P0931132	SPINDLE MOTOR 3HP 220V 3-PH
132-1	P0931132-1	SPINDLE POWER CABLE
133	P0931133	SPINDLE DUST COVER UPPER
134	P0931134	SPINDLE DUST COVER LOWER
135	P0931135	PROXIMITY SWITCH OMRON TL-Q5MCI-Z
136	P0931136	PROXIMITY SWITCH BRACKET
137	P0931137	SPINDLE DUST COVER BAFFLE
138	P0931138	PROTECTIVE COVER LOWER
139	P0931139	PROTECTIVE COVER UPPER
140	P0931140	ELECTRICAL COOLING FAN DP200A
141	P0931141	CABLE CARRIER
142	P0931142	SPINDLE COVER
143	P0931143	SPINDLE NUT
144	P0931144	CABLE CONDUIT
145	P0931145	COOLANT TUBE 6MM ID X 8MM OD

REF	PART #	DESCRIPTION
146	P0931146	STRAIN RELIEF TYPE-3 PG31
147	P0931147	WRENCH 18 X 21MM OPEN-ENDS
148	P0931148	WRENCH 27 X 30MM OPEN-ENDS
149	P0931149	HEX WRENCH 3MM
150	P0931150	HEX WRENCH 4MM
151	P0931151	HEX WRENCH 5MM
152	P0931152	HEX WRENCH 6MM
153	P0931153	COLLET ER20 1/8
154	P0931154	COLLET ER20 1/2
155	P0931155	COLLET ER20 4MM
156	P0931156	COLLET ER20 6MM
157	P0931157	HOLD-DOWN CLAMP
157-1	P0931157-1	CLAMP PLATE
157-2	P0931157-2	HEX BOLT M8-1.25 X 50
157-3	P0931157-3	WING NUT M8-1.25
157-4	P0931157-4	FLAT WASHER 8MM
157-5	P0931157-5	T-BOLT M8-1.25 X 80
158	P0931158	SPOILBOARD CUTTER 6 X 22MM
159	P0931159	QUICK-DISCONNECT TUBE COUPLING 8MM
160	P0931160	Z-AXIS TOOL SETTER
161	P0931161	ENGRAVING BITS 1/8" (10 PC)
162	P0931162	COOLANT PUMP WY-4500 100W
163	P0931163	DUST SHOE
164	P0931164	CAP SCREW M5-.8 X 45
165	P0931165	HEX NUT M5-.8
166	P0931166	CAP SCREW M6-1 X 35
167	P0931167	CAP SCREW M4-.7 X 25
168	P0931168	CAP SCREW M6-1 X 30
169	P0931169	LOCK WASHER 6MM
170	P0931170	FLAT WASHER 6MM
171	P0931171	BUTTON HD CAP SCR M5-.8 X 10
172	P0931172	CAP SCREW M5-.8 X 20
173	P0931173	FLAT HD CAP SCR M5-.8 X 6
174	P0931174	FLAT WASHER 5MM
175	P0931175	LOCK WASHER 5MM
176	P0931176	CAP SCREW M5-.8 X 25
177	P0931177	CAP SCREW M8-1.25 X 20
178	P0931178	SHOULDER SCREW M6-1 X 24, 6 X 14
179	P0931179	ELECTRICAL FAN COVER
180	P0931180	CAP SCREW M8-1.25 X 35
181	P0931181	CAP SCREW M5-.8 X 10
182	P0931182	SPINDLE DIRECTION LABEL
183	P0931183	X-AXIS MOVEMENT LABEL
184	P0931184	Z-AXIS MOVEMENT LABEL

BUY PARTS ONLINE AT GRIZZLY.COM!
Scan QR code to visit our Parts Store.

Electrical Cabinet Components

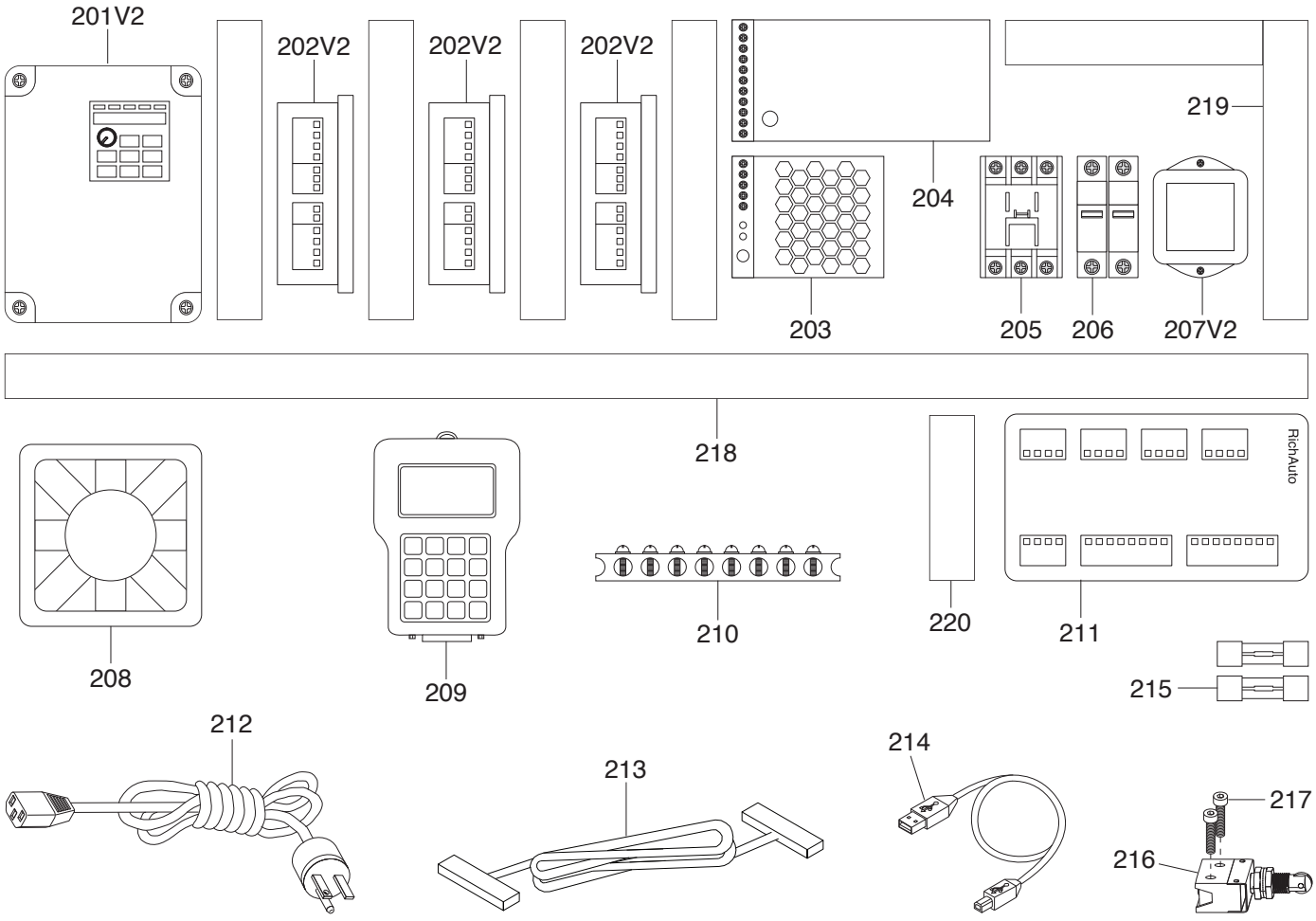

REF	PART #	DESCRIPTION
201V2	P0931201V2	VFD FOLINN BD612-2R2-2-DK V2.11.23
202V2	P0931202V2	STEPPER DRIVER LS DM542-05 V2.05.24
203	P0931203	24V DC POWER SUPPLY MEANWELL LRS-75-24
204	P0931204	40V AC POWER SUPPLY GY400W-40-A
205	P0931205	CONTACTOR CHINT NXC-18 220V
206	P0931206	FUSE HOLDER YHDA RT18-32X
207V2	P0931207V2	EMI FILTER MT4L2-20A-S V2.11.23
208	P0931208	ELECTRICAL COOLING FAN DP200A
209	P0931209	DSP CONTROLLER RICHAUTO A11E
210	P0931210	TERMINAL BAR 8P M4-.7 X 12

REF	PART #	DESCRIPTION
211	P0931211	INTERFACE BOARD RICHAUTO A1X/B1X
212	P0931212	POWER CORD 14G 3W 72" 6-15P
213	P0931213	50 PIN CABLE 26G 50W 72"
214	P0931214	USB-B CABLE 28G 4W 36"
215	P0931215	FUSE 10A 500V 10MM TIME-DELAY, CERAMIC
216	P0931216	LIMIT SWITCH PANASONIC AZ-7311
217	P0931217	CAP SCREW M4-.7 X 30
218	P0931218	WIRE LOOM 50 X 1220MM
219	P0931219	WIRE LOOM 50 X 220MM
220	P0931220	WIRE LOOM 50 X 160MM

BUY PARTS ONLINE AT GRIZZLY.COM!
Scan QR code to visit our Parts Store.

Labels & Cosmetics

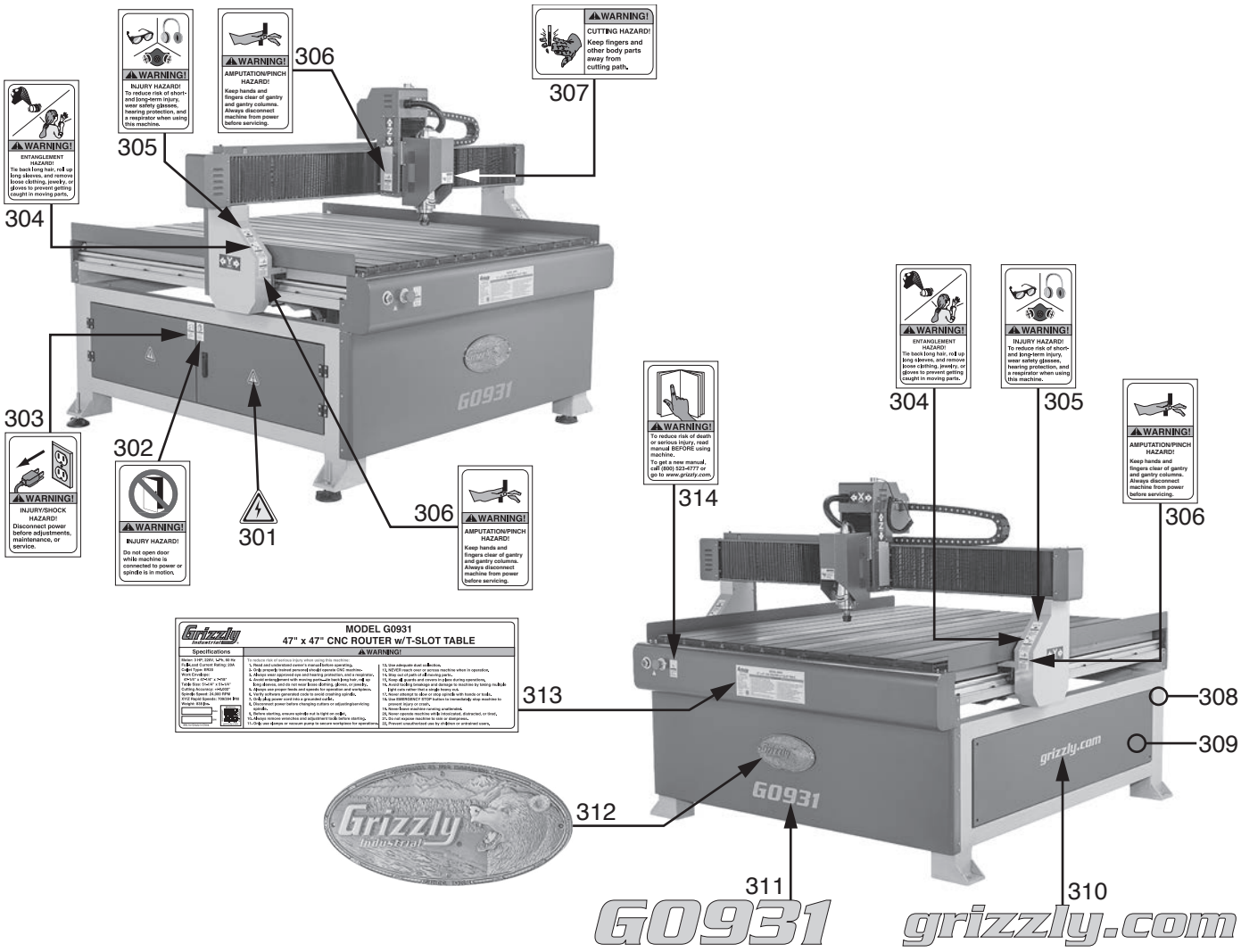

REF	PART #	DESCRIPTION
301	P0931301	ELECTRICITY HAZARD LABEL
302	P0931302	DO NOT OPEN DOOR CNC LABEL
303	P0931303	DISCONNECT 220V LABEL
304	P0931304	ENTANGLEMENT HAZARD LABEL
305	P0931305	EYE EAR LUNG HAZARD LABEL
306	P0931306	AMPUTATION HAZARD CNC LABEL
307	P0931307	CUTTING HAZARD CNC LABEL

REF	PART #	DESCRIPTION
308	P0931308	TOUCH-UP PAINT, GRIZZLY BEIGE
309	P0931309	TOUCH-UP PAINT, GRIZZLY GREEN
310	P0931310	GRIZZLY.COM LABEL
311	P0931311	MODEL NUMBER LABEL
312	P0931312	GRIZZLY NAMEPLATE, LARGE
313	P0931313	MACHINE ID LABEL
314	P0931314	READ MANUAL LABEL

⚠WARNING

Safety labels help reduce the risk of serious injury caused by machine hazards. If any label comes off or becomes unreadable, the owner of this machine MUST replace it in the original location before resuming operations. For replacements, contact (800) 523-4777 or www.grizzly.com.

BUY PARTS ONLINE AT GRIZZLY.COM!
Scan QR code to visit our Parts Store.

WARRANTY & RETURNS

Grizzly Industrial, Inc. warrants every product it sells for a period of **1 year** to the original purchaser from the date of purchase. This warranty does not apply to defects due directly or indirectly to misuse, abuse, negligence, accidents, repairs or alterations or lack of maintenance. This is Grizzly's sole written warranty and any and all warranties that may be implied by law, including any merchantability or fitness, for any particular purpose, are hereby limited to the duration of this written warranty. We do not warrant or represent that the merchandise complies with the provisions of any law or acts unless the manufacturer so warrants. In no event shall Grizzly's liability under this warranty exceed the purchase price paid for the product and any legal actions brought against Grizzly shall be tried in the State of Washington, County of Whatcom.

We shall in no event be liable for death, injuries to persons or property or for incidental, contingent, special, or consequential damages arising from the use of our products.

The manufacturers reserve the right to change specifications at any time because they constantly strive to achieve better quality equipment. We make every effort to ensure that our products meet high quality and durability standards and we hope you never need to use this warranty.

In the event you need to use this warranty, contact us by mail or phone and give us all the details. We will then issue you a "Return Number," which must be clearly posted on the outside as well as the inside of the carton. We will not accept any item back without this number. Proof of purchase must accompany the merchandise.

Please feel free to write or call us if you have any questions about the machine or the manual.

Thank you again for your business and continued support. We hope to serve you again soon.

For further information about the warranty, visit **https://www.grizzly.com/forms/warranty** or scan the QR code below to be automatically directed to our warranty page.



grizzly.com®

TOOL WEBSITE

Buy Direct and Save with Grizzly® – Trusted, Proven and a Great Value!

~Since 1983~

Visit Our Website Today For Current Specials!

ORDER

24 HOURS A DAY!

1-800-523-4777

