MODEL G0920
22" VARIABLE-SPEED
OPEN-ENDED DRUM SANDER
OWNER'S MANUAL
(For models manufactured since 09/23)



COPYRIGHT © DECEMBER, 2020 BY GRIZZLY INDUSTRIAL, INC., REVISED OCTOBER, 2025 (JP)
WARNING: NO PORTION OF THIS MANUAL MAY BE REPRODUCED IN ANY SHAPE OR FORM WITHOUT THE WRITTEN APPROVAL OF GRIZZLY INDUSTRIAL, INC.
#CS21435 PRINTED IN TAIWAN V1.10.25

⚠ WARNING!

This manual provides critical safety instructions on the proper setup, operation, maintenance, and service of this machine/tool. Save this document, refer to it often, and use it to instruct other operators.

Failure to read, understand and follow the instructions in this manual may result in fire or serious personal injury—including amputation, electrocution, or death.

The owner of this machine/tool is solely responsible for its safe use. This responsibility includes but is not limited to proper installation in a safe environment, personnel training and usage authorization, proper inspection and maintenance, manual availability and comprehension, application of safety devices, cutting/sanding/grinding tool integrity, and the usage of personal protective equipment.

The manufacturer will not be held liable for injury or property damage from negligence, improper training, machine modifications or misuse.

⚠ WARNING!

Some dust created by power sanding, sawing, grinding, drilling, and other construction activities contains chemicals known to the State of California to cause cancer, birth defects or other reproductive harm. Some examples of these chemicals are:

- **Lead from lead-based paints.**
- **Crystalline silica from bricks, cement and other masonry products.**
- **Arsenic and chromium from chemically-treated lumber.**

Your risk from these exposures varies, depending on how often you do this type of work. To reduce your exposure to these chemicals: Work in a well ventilated area, and work with approved safety equipment, such as those dust masks that are specially designed to filter out microscopic particles.

Table of Contents

INTRODUCTION 2
- Contact Info 2
- Manual Accuracy 2
- Identification 3
- Machine Data Sheet 4

SECTION 1: SAFETY 6
- Safety Instructions for Machinery 6
- Additional Safety for Drum Sanders 8

SECTION 2: POWER SUPPLY 9

SECTION 3: SETUP 11
- Needed for Setup 11
- Unpacking 11
- Inventory 12
- Site Considerations 14
- Assembly 15
- Anchoring to Floor 21
- Dust Collection 21
- Test Run 22
- Recommended Adjustments 22

SECTION 4: OPERATIONS 23
- Inspecting Stock 24
- Setting Depth of Cut 24
- Using Digital Depth Gauge 25
- Adjusting Conveyor Feed Rate 26
- Sanding Tips 27
- Choosing Sandpaper 28
- Replacing Sandpaper 28
- Folding Extension Tables 31

SECTION 5: ACCESSORIES 32

SECTION 6: MAINTENANCE 33
- Schedule 33
- Cleaning Machine 33
- Cleaning Sanding Belts 33
- Lubrication 34

SECTION 7: SERVICE 35
- Troubleshooting 35
- Tracking & Tensioning Conveyor Belt 38
- Replacing Conveyor Belt 39
- Making Blocks 40
- Adjusting Gibs 41
- Aligning Drum 41
- Adjusting Pressure Rollers 44
- Replacing Brushes 45

SECTION 8: WIRING 46
- Wiring Safety Instructions 46
- Wiring Diagram 47
- Electrical Component Photos 48

SECTION 9: PARTS 49
- Main 49
- Drum 51
- Cabinet 53
- Extension Tables 54
- Control Panel 55
- Labels & Cosmetics 56

WARRANTY & RETURNS 57

INTRODUCTION

Contact Info

We stand behind our machines! If you have questions or need help, contact us with the information below. Before contacting, make sure you get the **serial number** and **manufacture date** from the machine ID label. This will help us help you faster.

Grizzly Technical Support
1815 W. Battlefield
Springfield, MO 65807
Phone: (570) 546-9663
Email: techsupport@grizzly.com

We want your feedback on this manual. What did you like about it? Where could it be improved? Please take a few minutes to give us feedback.

Grizzly Documentation Manager
P.O. Box 2069
Bellingham, WA 98227-2069
Email: manuals@grizzly.com

Manual Accuracy

We are proud to provide a high-quality owner's manual with your new machine!

We made every effort to be exact with the instructions, specifications, drawings, and photographs in this manual. Sometimes we make mistakes, but our policy of continuous improvement also means that **sometimes the machine you receive is slightly different than shown in the manual**.

If you find this to be the case, and the difference between the manual and machine leaves you confused or unsure about something, check our website for an updated version. We post current manuals and manual updates for free on our website at **www.grizzly.com**.

Alternatively, you can call our Technical Support for help. Before calling, make sure you write down the **manufacture date** and **serial number** from the machine ID label (see below). This information is required for us to provide proper tech support, and it helps us determine if updated documentation is available for your machine.

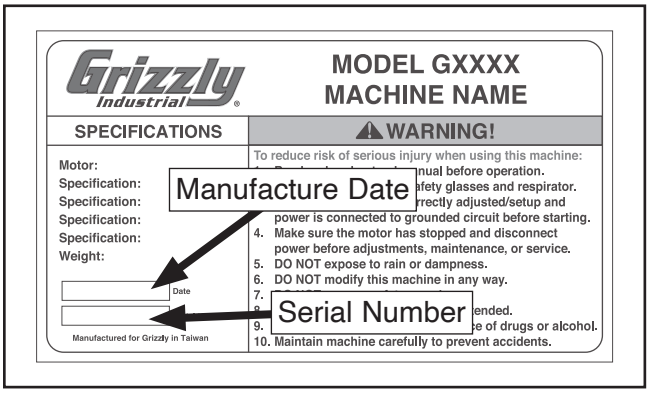

Identification

Become familiar with the names and locations of the controls and features shown below to better understand the instructions in this manual.

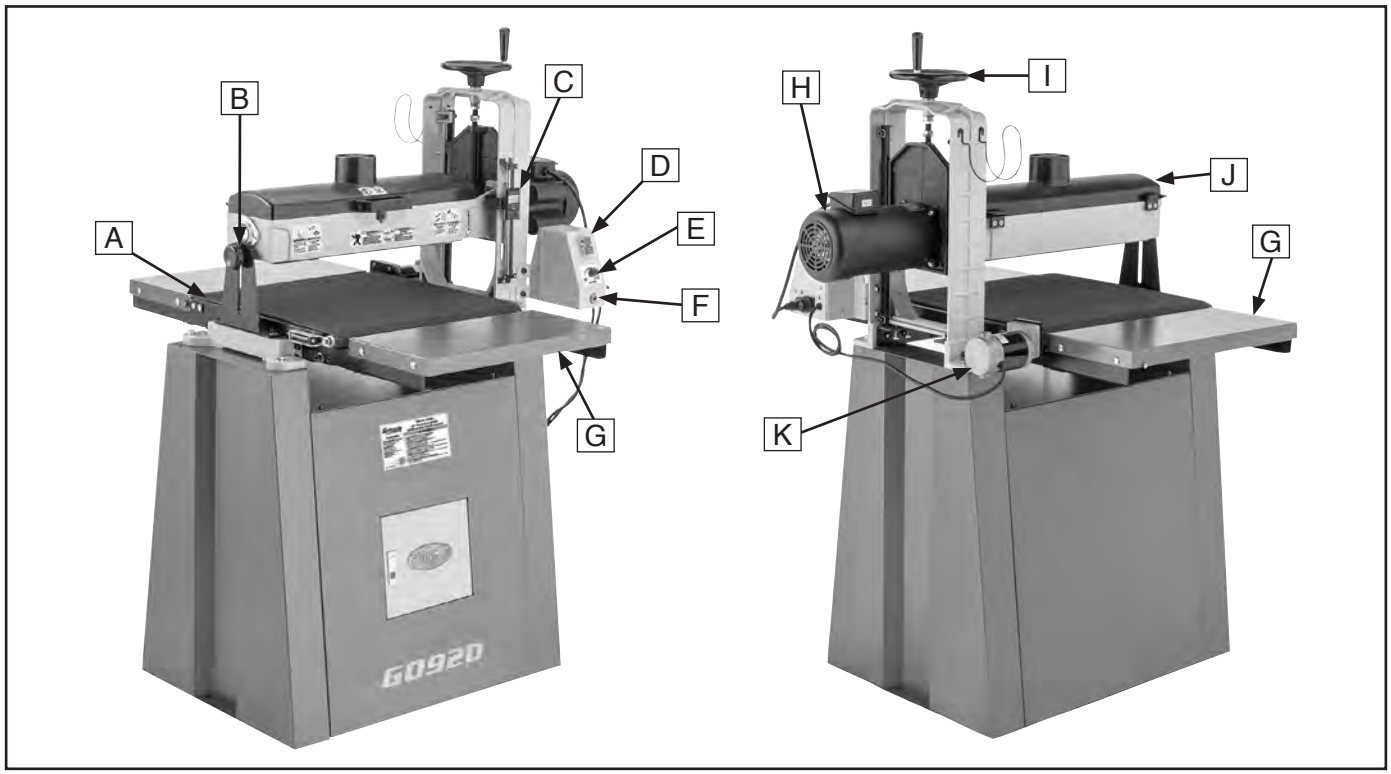

A. Conveyor Table w/Belt: Feeds workpiece across conveyor table during sanding operations.

B. Drum Height Lock Knob: Secures drum height setting.

C. Digital Depth Gauge: Displays approximate distance between sanding drum and conveyor belt or distance between two depths.

D. ON/OFF Buttons: Turn motor ***ON*** and ***OFF***.

E. Conveyor Feed Rate Dial: Rotate dial clockwise to increase conveyor belt feed rate or counterclockwise to decrease feed rate. Conveyor feed rate ranges from 0–10 FPM.

F. Circuit Breaker Reset Button: Trips during excessive sanding operation when workload overloads circuit. Press button to reset breaker.

G. Extension Tables: Support large workpieces as they pass under sanding drum.

H. Drum Motor: Powers sanding drum.

I. Drum Height Handwheel: Raises and lowers drum. One full rotation moves drum approximately 0.06" (1/16").

J. Drum Door: Provides access for servicing.

K. Feed Motor: Powers conveyor belt.

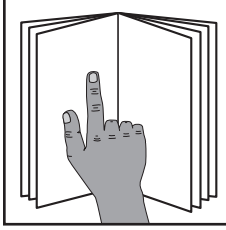

⚠WARNING

To reduce your risk of serious injury, read this entire manual BEFORE using machine.

MACHINE DATA SHEET

Customer Service #: (570) 546-9663 · To Order Call: (800) 523-4777 · Fax #: (800) 438-5901

MODEL G0920 22" VARIABLE-SPEED OPEN-ENDED DRUM SANDER

Product Dimensions:

Weight..... 307 lbs.
Width (side-to-side) x Depth (front-to-back) x Height..... 42-1/2 x 43-1/2 x 61 in.
Footprint (Length x Width)..... 23-1/2 x 32-1/2 in.

Shipping Dimensions:

Carton #1

Type..... Cardboard Box
Content..... Machine
Weight..... 236 lbs.
Length x Width x Height..... 45 x 26 x 26 in.
Must Ship Upright..... Yes

Carton #2

Type..... Cardboard Box
Content..... Stand
Weight..... 105 lbs.
Length x Width x Height..... 34 x 27 x 14 in.
Must Ship Upright..... Yes

Electrical:

Power Requirement..... 230V, Single-Phase, 60 Hz
Full-Load Current Rating..... 8.5A
Minimum Circuit Size..... 15A
Connection Type..... Cord & Plug
Power Cord Included..... Yes
Power Cord Length..... 60 in.
Power Cord Gauge..... 14 AWG
Plug Included..... Yes
Included Plug Type..... 6-15
Switch Type..... Control Panel w/Magnetic Switch Protection

Motors:

Main

Horsepower..... 2 HP
Phase..... Single-Phase
Amps..... 7.5A
Speed..... 1720 RPM
Type..... TEFC Capacitor-Start Induction
Power Transfer ..... Direct
Bearings..... Sealed & Permanently Lubricated
Centrifugal Switch/Contacts Type..... External

Feed

Horsepower	50W
Phase	Single-Phase
Amps	1A
Speed	2200 RPM
Type	Universal
Power Transfer	Direct
Bearings	Sealed & Permanently Lubricated

Main Specifications:

Operation Information

Number of Sanding Heads	1
Maximum Board Width	21-1/4 in.
Minimum Board Width	2 in.
Maximum Board Thickness	5 in.
Minimum Board Thickness	1/4 in.
Minimum Board Length	9 in.
Sandpaper Speed	2300 FPM
Conveyor Feed Rate	0 - 10 FPM
Sandpaper Length	127-1/2 in.
Sandpaper Width	3 in.

Drum Information

Infeed Sanding Drum Type	Aluminum
Infeed Sanding Drum Size	5 in.

Construction

Conveyor Belt	Rubber
Body	Steel
Paint Type/Finish	Powder Coated

Other Related Information

Floor To Table Height	36-1/4 in.
Sanding Belt Tension	Spring Loaded
Number of Pressure Rollers	2
Pressure Roller Type	Steel
Pressure Roller Size	3/4 in.
Conveyor Belt Length	46 in.
Conveyor Belt Width	22 in.
Belt Roller Size	1-3/4 in.
Number of Dust Ports	1
Dust Port Size	4 in.

Other Specifications:

Country of Origin	Taiwan
Warranty	1 Year
Approximate Assembly & Setup Time	30 Minutes
Serial Number Location	ID Label

Features:

Spring-Loaded Sanding Belt Tension/Sandpaper
Industrial-Duty Rubber Conveyor Belt
4" Dust Port w/Dust Hose Hook
Variable-Speed Conveyor
5" Aluminum Computer-Balanced Sanding Drum
Drum Lifting and Lowering System with Precision DRO
Push Button Circuit Breaker for Easy Reset

SECTION 1: SAFETY

For Your Own Safety, Read Instruction Manual Before Operating This Machine

The purpose of safety symbols is to attract your attention to possible hazardous conditions. This manual uses a series of symbols and signal words intended to convey the level of importance of the safety messages. The progression of symbols is described below. Remember that safety messages by themselves do not eliminate danger and are not a substitute for proper accident prevention measures. Always use common sense and good judgment.

⚠DANGER **Indicates an imminently hazardous situation which, if not avoided, WILL result in death or serious injury.**

⚠WARNING **Indicates a potentially hazardous situation which, if not avoided, COULD result in death or serious injury.**

⚠CAUTION **Indicates a potentially hazardous situation which, if not avoided, MAY result in minor or moderate injury. It may also be used to alert against unsafe practices.**

NOTICE **Alerts the user to useful information about proper operation of the machine to avoid machine damage.**

Safety Instructions for Machinery

⚠WARNING

OWNER'S MANUAL. Read and understand this owner's manual BEFORE using machine.

TRAINED OPERATORS ONLY. Untrained operators have a higher risk of being hurt or killed. Only allow trained/supervised people to use this machine. When machine is not being used, disconnect power, remove switch keys, or lock-out machine to prevent unauthorized use—especially around children. Make your workshop kid proof!

DANGEROUS ENVIRONMENTS. Do not use machinery in areas that are wet, cluttered, or have poor lighting. Operating machinery in these areas greatly increases the risk of accidents and injury.

MENTAL ALERTNESS REQUIRED. Full mental alertness is required for safe operation of machinery. Never operate under the influence of drugs or alcohol, when tired, or when distracted.

ELECTRICAL EQUIPMENT INJURY RISKS. You can be shocked, burned, or killed by touching live electrical components or improperly grounded machinery. To reduce this risk, only allow qualified service personnel to do electrical installation or repair work, and always disconnect power before accessing or exposing electrical equipment.

DISCONNECT POWER FIRST. Always disconnect machine from power supply BEFORE making adjustments, changing tooling, or servicing machine. This prevents an injury risk from unintended startup or contact with live electrical components.

EYE PROTECTION. Always wear ANSI-approved safety glasses or a face shield when operating or observing machinery to reduce the risk of eye injury or blindness from flying particles. Everyday eyeglasses are NOT approved safety glasses.

⚠WARNING

WEARING PROPER APPAREL. Do not wear loose clothing, gloves, neckties, or jewelry that can become entangled in moving parts. Always tie back or cover long hair. Wear non-slip footwear to reduce risk of slipping and losing control or accidentally contacting cutting tool or moving parts.

HAZARDOUS DUST. Dust created by machinery operations may cause cancer, birth defects, or long-term respiratory damage. Be aware of dust hazards associated with each workpiece material. Always wear a NIOSH-approved respirator to reduce your risk.

HEARING PROTECTION. Always wear hearing protection when operating or observing loud machinery. Extended exposure to this noise without hearing protection can cause permanent hearing loss.

REMOVE ADJUSTING TOOLS. Tools left on machinery can become dangerous projectiles upon startup. Never leave chuck keys, wrenches, or any other tools on machine. Always verify removal before starting!

USE CORRECT TOOL FOR THE JOB. Only use this tool for its intended purpose—do not force it or an attachment to do a job for which it was not designed. Never make unapproved modifications—modifying tool or using it differently than intended may result in malfunction or mechanical failure that can lead to personal injury or death!

AWKWARD POSITIONS. Keep proper footing and balance at all times when operating machine. Do not overreach! Avoid awkward hand positions that make workpiece control difficult or increase the risk of accidental injury.

CHILDREN & BYSTANDERS. Keep children and bystanders at a safe distance from the work area. Stop using machine if they become a distraction.

GUARDS & COVERS. Guards and covers reduce accidental contact with moving parts or flying debris. Make sure they are properly installed, undamaged, and working correctly BEFORE operating machine.

FORCING MACHINERY. Do not force machine. It will do the job safer and better at the rate for which it was designed.

NEVER STAND ON MACHINE. Serious injury may occur if machine is tipped or if the cutting tool is unintentionally contacted.

STABLE MACHINE. Unexpected movement during operation greatly increases risk of injury or loss of control. Before starting, verify machine is stable and mobile base (if used) is locked.

USE RECOMMENDED ACCESSORIES. Consult this owner's manual or the manufacturer for recommended accessories. Using improper accessories will increase the risk of serious injury.

UNATTENDED OPERATION. To reduce the risk of accidental injury, turn machine ***OFF*** and ensure all moving parts completely stop before walking away. Never leave machine running while unattended.

MAINTAIN WITH CARE. Follow all maintenance instructions and lubrication schedules to keep machine in good working condition. A machine that is improperly maintained could malfunction, leading to serious personal injury or death.

DAMAGED PARTS. Regularly inspect machine for damaged, loose, or mis-adjusted parts—or any condition that could affect safe operation. Immediately repair/replace BEFORE operating machine. For your own safety, DO NOT operate machine with damaged parts!

MAINTAIN POWER CORDS. When disconnecting cord-connected machines from power, grab and pull the plug—NOT the cord. Pulling the cord may damage the wires inside. Do not handle cord/plug with wet hands. Avoid cord damage by keeping it away from heated surfaces, high traffic areas, harsh chemicals, and wet/damp locations.

EXPERIENCING DIFFICULTIES. If at any time you experience difficulties performing the intended operation, stop using the machine! Contact our Technical Support at (570) 546-9663.

Additional Safety for Drum Sanders

⚠WARNING

Serious injury or death can occur from getting hands trapped between workpiece and conveyor table and being pulled into machine, or becoming entangled in rotating parts inside machine. Workpieces thrown by sander can strike nearby operator or bystanders with significant force. Long-term respiratory damage can occur from using sander without proper use of a respirator. To reduce the risk of these hazards, operator and bystanders MUST completely heed the hazards and warnings below.

FEEDING WORKPIECE. Placing fingers between workpiece and conveyor can result in pinching injuries, or possibly getting trapped and pulled into sanding area of machine. DO NOT place fingers under bottom of workpiece while feeding it into sander.

SANDING DUST. Sanding creates large amounts of fine airborne dust that can lead to eye injury or serious respiratory illness. Reduce your risk by always wearing approved eye and respiratory protection when sanding. Never operate without adequate dust collection system in place and running. However, dust collection is not a substitute for using a respirator.

POWER DISCONNECT. An accidental startup while changing sanding belts or performing adjustments or maintenance can result in serious entanglement or abrasion injuries. Make sure machine is turned ***OFF***, disconnected from power and air, and all moving parts are completely stopped before changing belts, doing adjustments, or performing maintenance.

SANDPAPER CONTACT. Rotating sandpaper can remove a large amount of flesh quickly. Keep hands away from rotating sanding drum(s) during operation. Never touch moving sandpaper.

AVOIDING ENTANGLEMENT. Tie back long hair, remove jewelry, and do not wear loose clothing or gloves. These can easily get caught in moving parts. Never reach inside machine or try to clear jammed workpiece while machine is operating. Keep all guards in place and secure.

WORKPIECE MATERIAL. This sander is designed to sand only natural wood products or man-made products made from natural wood fiber. DO NOT sand any metal products.

WORKPIECE INSPECTION. Nails, staples, knots, or other imperfections in workpiece can be dislodged and thrown from sander at high rate of speed into operator or bystanders, or cause damage to sandpaper or sander. Never try to sand stock that has embedded foreign objects or questionable imperfections.

KICKBACK. Occurs when a workpiece is ejected out the front of sander at a high rate of speed toward operator or bystanders. To reduce risk of kickback-related injuries, always stay out of workpiece path, only feed one board at a time, and always make sure pressure rollers are properly adjusted below sanding roller. Never sand workpieces below minimum specifications listed in **Machine Data Sheet**.

⚠WARNING

Like all machinery there is potential danger when operating this machine. Accidents are frequently caused by lack of familiarity or failure to pay attention. Use this machine with respect and caution to decrease the risk of operator injury. If normal safety precautions are overlooked or ignored, serious personal injury may occur.

⚠CAUTION

No list of safety guidelines can be complete. Every shop environment is different. Always consider safety first, as it applies to your individual working conditions. Use this and other machinery with caution and respect. Failure to do so could result in serious personal injury, damage to equipment, or poor work results.

SECTION 2: POWER SUPPLY

Availability

Before installing the machine, consider the availability and proximity of the required power supply circuit. If an existing circuit does not meet the requirements for this machine, a new circuit must be installed. To minimize the risk of electrocution, fire, or equipment damage, installation work and electrical wiring must be done by an electrician or qualified service personnel in accordance with all applicable codes and standards.

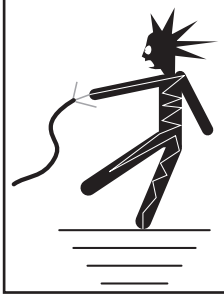

⚠WARNING

Electrocution, fire, shock, or equipment damage may occur if machine is not properly grounded and connected to power supply.

Full-Load Current Rating

The full-load current rating is the amperage a machine draws at 100% of the rated output power. On machines with multiple motors, this is the amperage drawn by the largest motor or sum of all motors and electrical devices that might operate at one time during normal operations.

Full-Load Current Rating at 230V .... 8.5 Amps

The full-load current is not the maximum amount of amps that the machine will draw. If the machine is overloaded, it will draw additional amps beyond the full-load rating.

If the machine is overloaded for a sufficient length of time, damage, overheating, or fire may result—especially if connected to an undersized circuit. To reduce the risk of these hazards, avoid overloading the machine during operation and make sure it is connected to a power supply circuit that meets the specified circuit requirements.

Circuit Information

A power supply circuit includes all electrical equipment between the breaker box or fuse panel in the building and the machine. The power supply circuit used for this machine must be sized to safely handle the full-load current drawn from the machine for an extended period of time. (If this machine is connected to a circuit protected by fuses, use a time delay fuse marked D.)

⚠CAUTION

For your own safety and protection of property, consult an electrician if you are unsure about wiring practices or electrical codes in your area.

Note: *Circuit requirements in this manual apply to a dedicated circuit—where only one machine will be running on the circuit at a time. If machine will be connected to a shared circuit where multiple machines may be running at the same time, consult an electrician or qualified service personnel to ensure circuit is properly sized for safe operation.*

230V Circuit Requirements

This machine is prewired to operate on a power supply circuit that has a verified ground and meets the following requirements:

Nominal Voltage 208V, 220V, 230V, 240V
Cycle ..... 60 Hz
Phase ..... Single-Phase
Power Supply Circuit ..... 15 Amps
Plug/Receptacle ..... NEMA 6-15

Grounding Requirements

This machine MUST be grounded. In the event of certain malfunctions or breakdowns, grounding reduces the risk of electric shock by providing a path of least resistance for electric current.

This machine is equipped with a power cord that has an equipment-grounding wire and a grounding plug. Only insert plug into a matching receptacle (outlet) that is properly installed and grounded in accordance with all local codes and ordinances. DO NOT modify the provided plug!

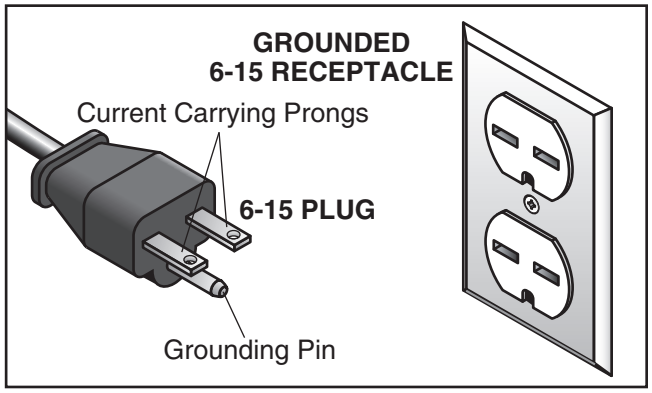

Figure 1. Typical 6-15 plug and receptacle.

⚠CAUTION

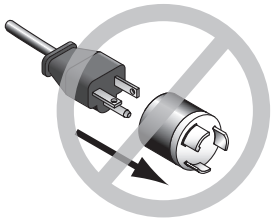

No adapter should be used with plug. If plug does not fit available receptacle, or if machine must be reconnected for use on a different type of circuit, reconnection must be performed by an electrician or qualified service personnel, and it must comply with all local codes and ordinances.

⚠WARNING

Serious injury could occur if you connect machine to power before completing setup process. DO NOT connect to power until instructed later in this manual.

Improper connection of the equipment-grounding wire can result in a risk of electric shock. The wire with green insulation (with or without yellow stripes) is the equipment-grounding wire. If repair or replacement of the power cord or plug is necessary, do not connect the equipment-grounding wire to a live (current carrying) terminal.

Check with a qualified electrician or service personnel if you do not understand these grounding requirements, or if you are in doubt about whether the machine is properly grounded. If you ever notice that a cord or plug is damaged or worn, disconnect it from power, and immediately replace it with a new one.

Extension Cords

We do not recommend using an extension cord with this machine. If you must use an extension cord, only use it if absolutely necessary and only on a temporary basis.

Extension cords cause voltage drop, which can damage electrical components and shorten motor life. Voltage drop increases as the extension cord size gets longer and the gauge size gets smaller (higher gauge numbers indicate smaller sizes).

Any extension cord used with this machine must be in good condition and contain a ground wire and matching plug/receptacle. Additionally, it must meet the following size requirements:

Minimum Gauge Size.....12 AWG
Maximum Length (Shorter is Better).....50 ft.

SECTION 3: SETUP

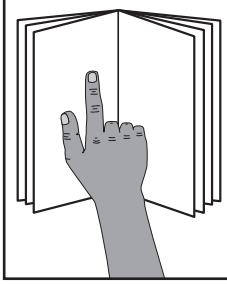

⚠WARNING

This machine presents serious injury hazards to untrained users. Read through this entire manual to become familiar with the controls and operations before starting the machine!



⚠WARNING

Wear safety glasses during the entire setup process!



⚠WARNING

HEAVY LIFT!

Straining or crushing injury may occur from improperly lifting machine or some of its parts. To reduce this risk, get help from other people and use a forklift (or other lifting equipment) rated for weight of this machine.

Needed for Setup

The following items are needed, but not included, for the setup/assembly of this machine.

Description	Qty
• Lifting Equipment (Rated for at least 500 lbs.)	1
• Additional People	2
• Safety Glasses (for each person)	1 Pair
• Wrench or Socket ½"	1
• Wrenches or Sockets 13mm	2
• Phillips Head Screwdriver #1, #2	1 Each
• Flat Head Screwdriver ¼"	1
• Straightedge 36"	1
• Dust Hose 4"	1
• Hose Clamp 4"	1
• Dust Collection System	1
• Mounting Hardware (**Page 21**)	As Needed

Unpacking

This machine was carefully packaged for safe transport. When unpacking, separate all enclosed items from packaging materials and inspect them for shipping damage. ***If items are damaged, please call us immediately at (570) 546-9663.***

IMPORTANT: Save all packaging materials until you are completely satisfied with the machine and have resolved any issues between Grizzly or the shipping agent. *You MUST have the original packaging to file a freight claim. It is also extremely helpful if you need to return your machine later.*

Inventory

The following is a list of items shipped with your machine. Before beginning setup, lay these items out and inventory them.

If any non-proprietary parts are missing (e.g. a nut or a washer), we will gladly replace them; or for the sake of expediency, replacements can be obtained at your local hardware store.

NOTICE

If you cannot find an item on this list, carefully check around/inside the machine and packaging materials. Often, these items get lost in packaging materials while unpacking or they are pre-installed at the factory.

Cabinet (Figure 2)		Qty
A.	Front Panel	1
B.	Rear Panel	1
C.	Left Side Panel	1
D.	Right Side Panel	1
E.	Bottom Panel	1
F.	Top Panel	1
G.	Rubber Feet	4
H.	Partition Panels	2
I.	Slotted Screws 5/16"-18 x 3/4"	4
J.	Hex Bolts M8-1.25 x 40	4
K.	Hex Bolts M8-1.25 x 25	8
L.	Phillips Head Screws M5-.8 x 8	10
M.	Fender Washers 8mm	4
N.	Flat Washers 5/16"	4
O.	Flat Washers 8mm	16
P.	Flat Washers 5mm	10
Q.	Lock Washers 8mm	12
R.	Lock Washers 5mm	4
S.	Hex Nuts 5/16"-18	4
T.	Hex Nuts M8-1.25	8

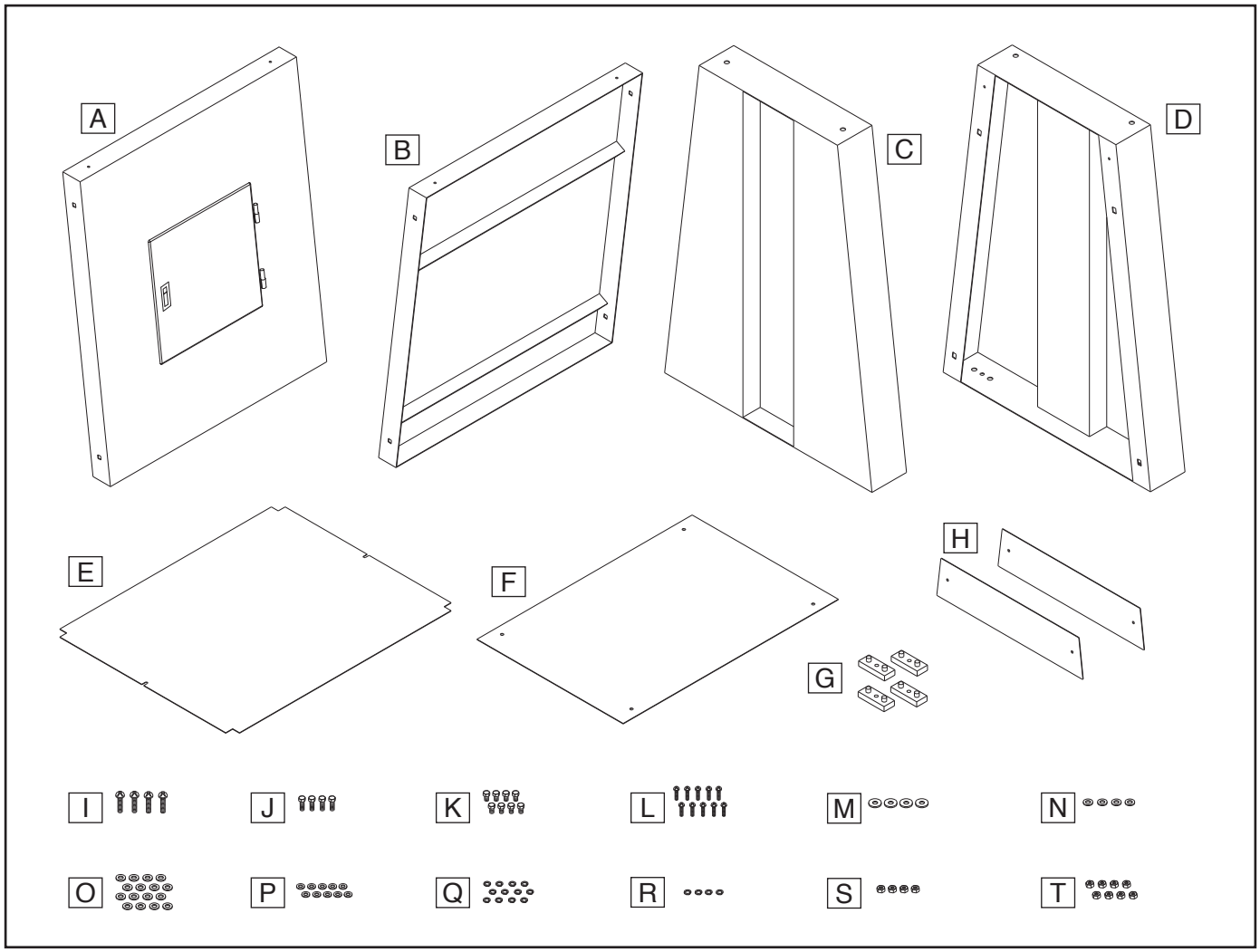

Figure 2. Cabinet inventory.

Extension Tables (Figure 3)	Qty
U. Extension Tables	2
V. Right Table Mounting Blocks	2
W. Left Table Mounting Blocks	2
X. Right Table Folding Brackets	2
Y. Left Table Folding Brackets	2
Z. Table Mounting Brackets	2
AA. Shoulder Screws M10-1.5 x 65	4
AB. Flat Head Screws M8-1.25 x 25	8
AC. Carriage Bolts M8-1.25 x 20	8
AD. Cap Screws M8-1.25 x 16	8
AE. Flat Washers 10mm	4
AF. Flat Washers 8mm	16
AG. Lock Washers 8mm	16
AH. Lock Nuts M10-1.5	4
AI. Hex Nuts M8-1.25	8

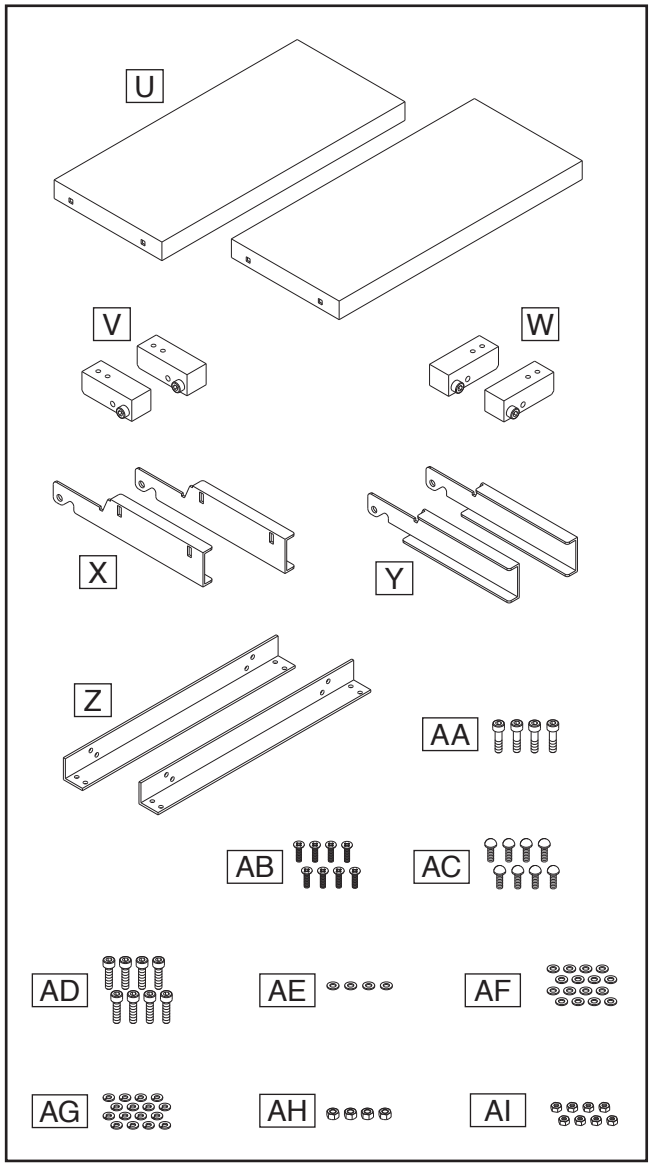

Figure 3. Extension tables inventory.

Sander (Figure 4)	Qty
AJ. Sander (Not Shown)	1
AK. Conveyor Table Shims	2
AL. Battery CR2032	1
AM. Digital Depth Gauge	1
AN. Arch Mounting Bracket	1
AO. Drum Height Handwheel	1
AP. Handwheel Handle	1
AQ. Dust Hose Hook	1
AR. Phillips Head Screws M5-.8 x 8	4
AS. Phillips Head Screws M3-.5 x 6	2
AT. Flat Washers 5mm	4
AU. Flat Washers 4mm	2
AV. Lock Washers 5mm	2

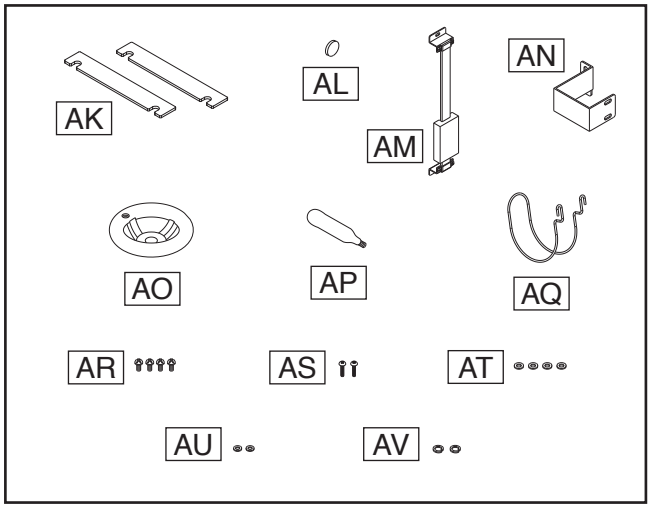

Figure 4. Sander inventory.

Tools (Figure 5)	Qty
AW. Hex Wrench 4mm	1
AX. Hex Wrench 5mm	1
AY. Hex Wrench 6mm	1
AZ. Hex Wrench 8mm	1
BA. Open-End Wrench 10 x 12mm	1
BB. Open-End Wrench 12 x 14mm	1
BC. Open-End Wrench 14 x 17mm	1

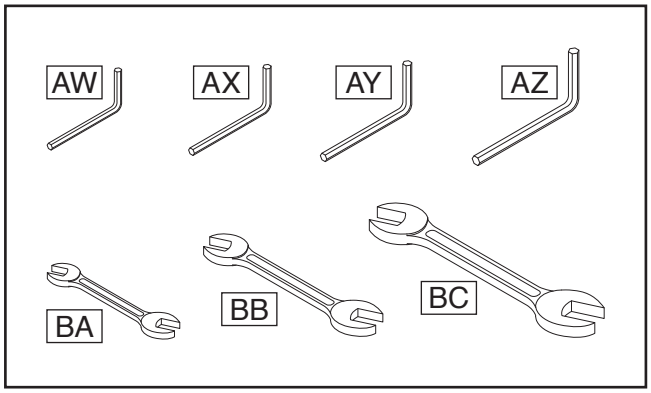

Figure 5. Tools inventory.

Site Considerations

Weight Load

Refer to the **Machine Data Sheet** for the weight of your machine. Make sure that the surface upon which the machine is placed will bear the weight of the machine, additional equipment that may be installed on the machine, and the heaviest workpiece that will be used. Additionally, consider the weight of the operator and any dynamic loading that may occur when operating the machine.

Space Allocation

Consider the largest size of workpiece that will be processed through this machine and provide enough space around the machine for adequate operator material handling or the installation of auxiliary equipment. With permanent installations, leave enough space around the machine to open or remove doors/covers as required by the maintenance and service described in this manual. **See below for required space allocation.**

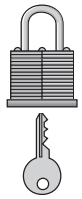

⚠CAUTION

Children or untrained people may be seriously injured by this machine. Only install in an access restricted location.

Physical Environment

The physical environment where the machine is operated is important for safe operation and longevity of machine components. For best results, operate this machine in a dry environment that is free from excessive moisture, hazardous chemicals, airborne abrasives, or extreme conditions. Extreme conditions for this type of machinery are generally those where the ambient temperature range exceeds 41°–104°F; the relative humidity range exceeds 20%–95% (non-condensing); or the environment is subject to vibration, shocks, or bumps.

Electrical Installation

Place this machine near an existing power source. Make sure all power cords are protected from traffic, material handling, moisture, chemicals, or other hazards. Make sure to leave enough space around machine to disconnect power supply or apply a lockout/tagout device, if required.

Lighting

Lighting around the machine must be adequate enough that operations can be performed safely. Shadows, glare, or strobe effects that may distract or impede the operator must be eliminated.

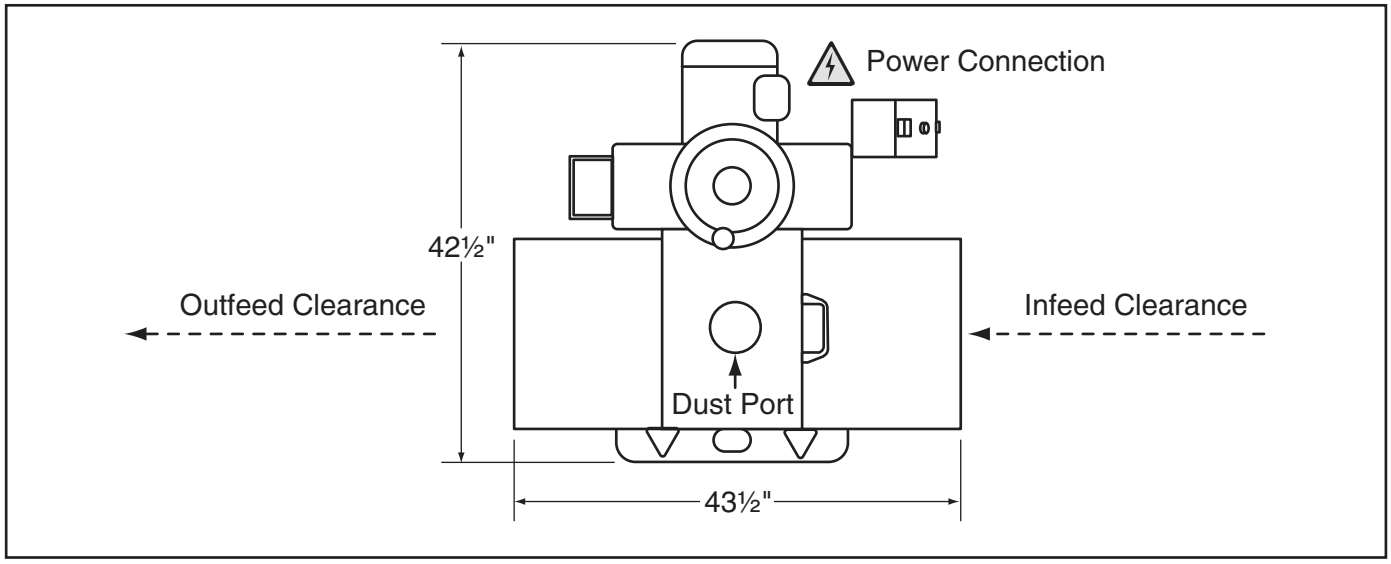

Figure 6. Minimum working clearances.

Assembly

The machine must be fully assembled before it can be operated. Before beginning the assembly process, refer to **Needed for Setup** and gather all listed items. To ensure the assembly process goes smoothly, first clean any parts that are covered or coated in heavy-duty rust preventative (if applicable).

To assemble machine:

1. Attach (2) rubber feet to left side panel with (2) 5/16"-18 x 3/4" slotted screws, 5/16" flat washers, 8mm lock washers, and 5/16"-18 hex nuts (see **Figure 7**).

Note: *Nubs on feet should face up to seat in holes in bottom of panel (see **Figure 7**).*

— If mounting machine to floor, do *not* attach feet to panel and proceed to **Step 3**.

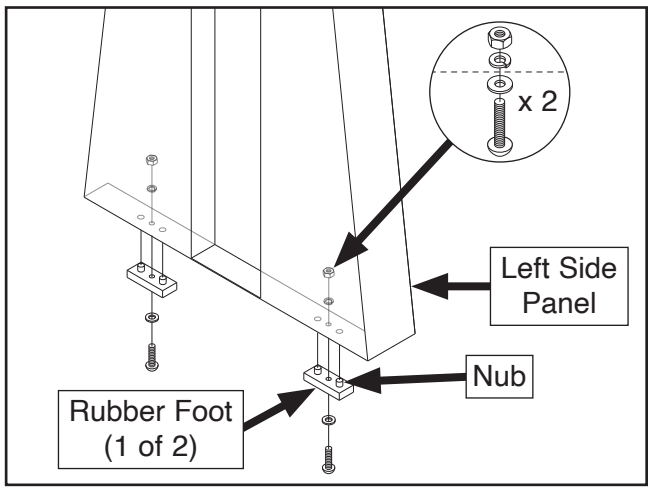

Figure 7. Machine feet and fasteners.

2. Repeat **Step 1** with right side panel.

3. Attach right side panel to rear panel with (2) M8-1.25 x 25 hex bolts, (4) 8mm flat washers, (2) 8mm lock washers, and (2) M8-1.25 hex nuts (see **Figure 8**).

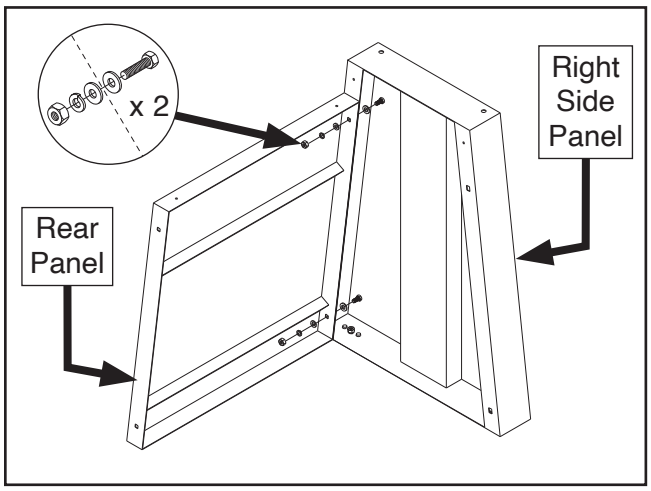

Figure 8. Right side panel attached to rear panel.

4. Attach bottom panel to right side panel with (1) M5-.8 x 8 Phillips head screw and 5mm flat washer (see **Figure 9**).

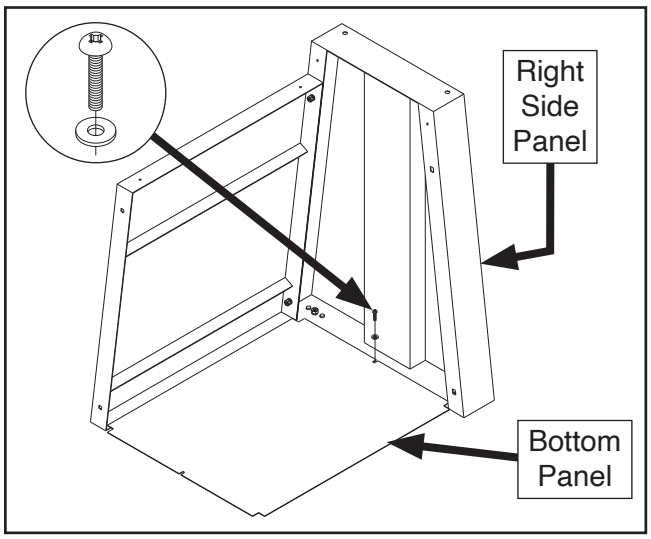

Figure 9. Bottom panel attached to right side panel.

5. Attach left side panel to rear panel with (2) M8-1.25 x 25 hex bolts, (4) 8mm flat washers, (2) 8mm lock washers, and (2) M8-1.25 hex nuts (see **Figure 10**).

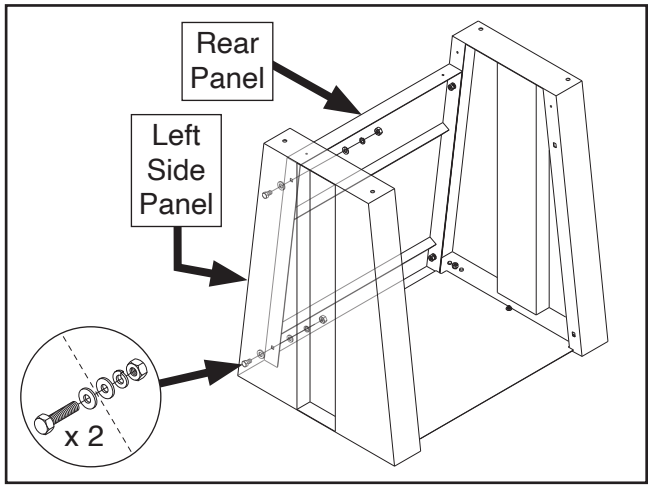

Figure 10. Left side panel attached to rear panel.

6. Attach bottom panel to left side panel with (1) M5-.8 x 8 Phillips head screw and 5mm flat washer.

7. Attach front panel to side panels with (4) M8-1.25 x 25 hex bolts, (8) 8mm flat washers, (4) 8mm lock washers, and (4) M8-1.25 hex nuts (see **Figure 11**).

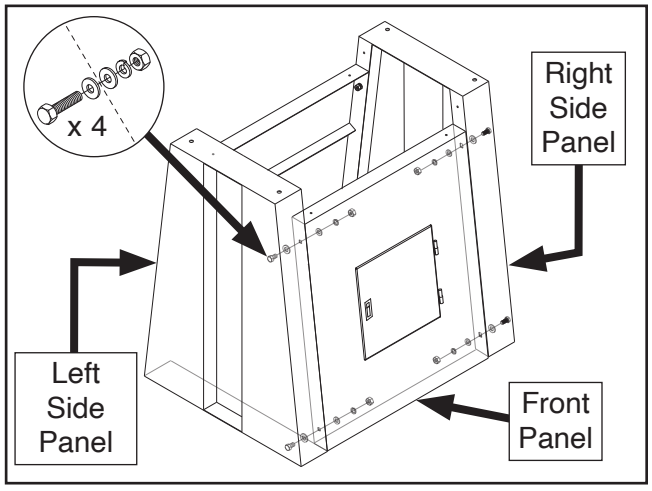

Figure 11. Front panel attached to side panels.

8. Attach top panel to front and rear panels with (4) M5-.8 x 8 Phillips head screws and 5mm flat washers (see **Figure 12**).

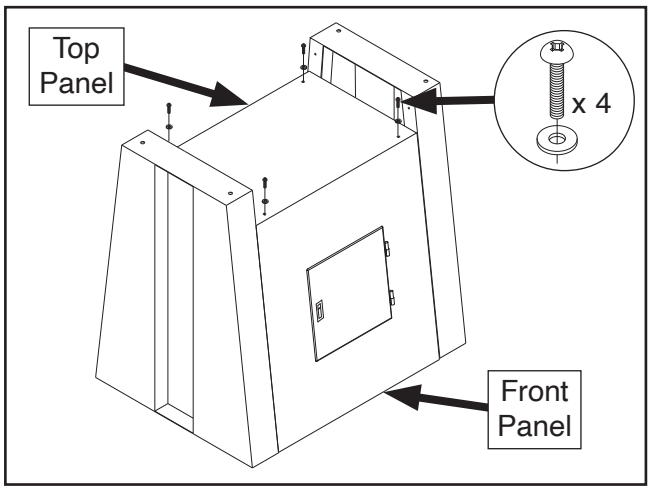

Figure 12. Top panel attached to front and rear panels.

9. Attach (1) partition panel to right side panel with (2) M5-.8 x 8 Phillips head screws, 5mm lock washers, and 5mm flat washers (see **Figure 13**).

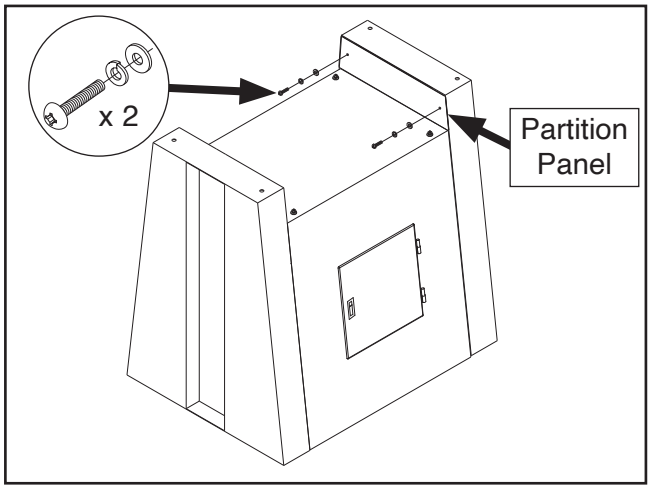

Figure 13. Partition panel attached to right side panel.

10. Attach remaining partition panel to left side panel with (2) M5-.8 x 8 Phillips head screws, 5mm lock washers, and 5mm flat washers.



⚠WARNING

HEAVY LIFT!

Straining or crushing injury may occur from improperly lifting machine or some of its parts. To reduce this risk, get help from other people and use a forklift (or other lifting equipment) rated for weight of this machine.

11. Use assistants or insert forklift forks underneath sander at locations shown in **Figure 14**.

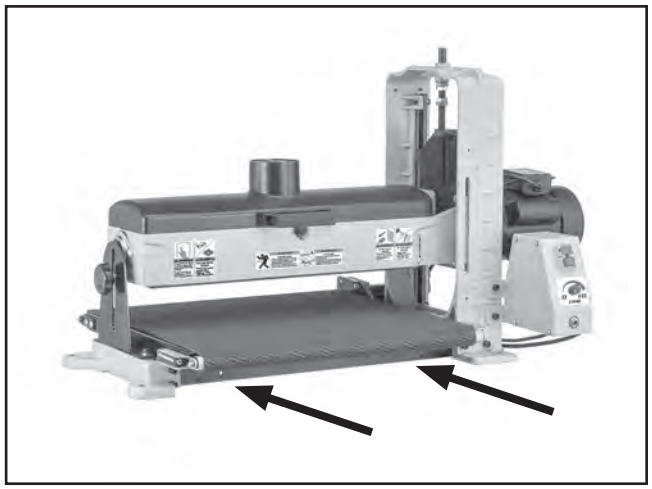

Figure 14. Locations for lifting.

12. Place sander on stand and attach with (4) M8-1.25 x 40 hex bolts and 8mm fender washers (see **Figure 15**).

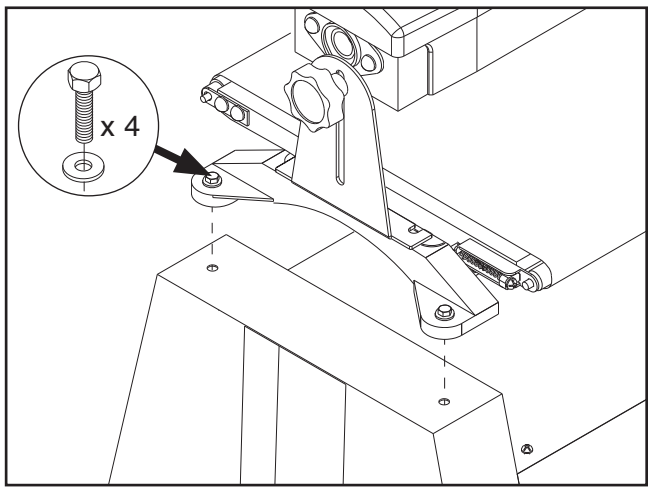

Figure 15. Attaching sander to cabinet.

13. Thread handwheel handle into drum height handwheel (see **Figure 16**).

14. Install drum height handwheel on shaft shown in **Figure 16** and tighten pre-installed set screw to secure.

15. Attach dust hose hook with (2) pre-installed M6-1 x 16 Phillips head screws (see **Figure 16**).

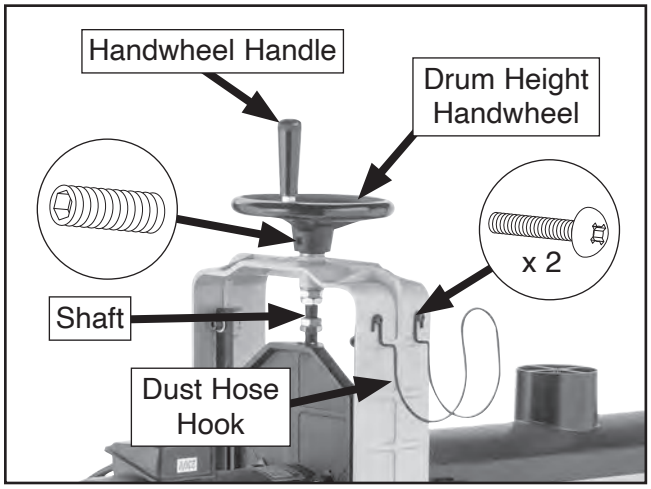

Figure 16. Drum height handwheel installed on sander.

16. Attach digital depth gauge to arch mounting bracket with (2) M3-.5 x 6 Phillips head screws and 4mm flat washers (see **Figure 17**).

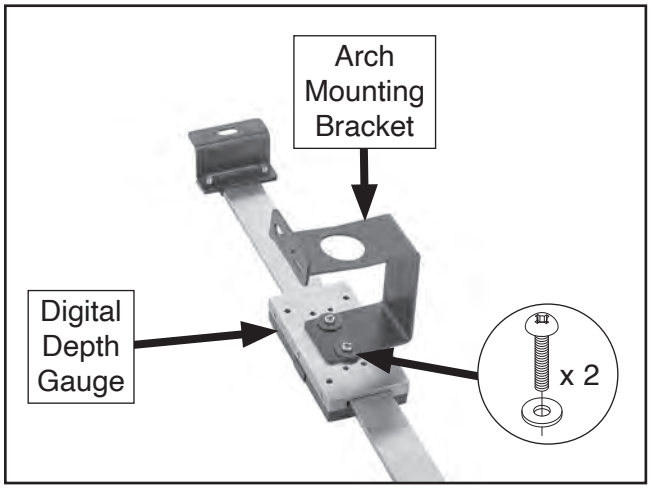

Figure 17. Digital depth gauge attached to arch bracket.

17. Attach digital depth gauge to arch body with (2) M5-.8 x 8 Phillips head screws and 5mm flat washers (see **Figure 18**).

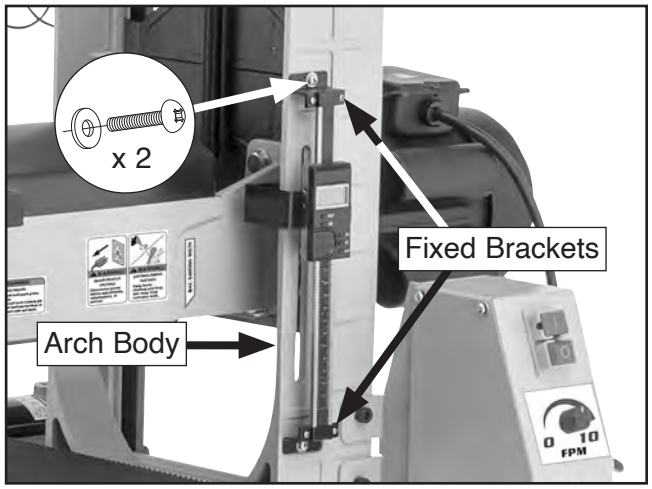

Figure 18. Digital depth gauge installed on machine.

18. Attach arch mounting bracket to drum case with (2) M5-.8 x 8 Phillips head screws, 5mm lock washers, and 5mm flat washers (see **Figure 19**).

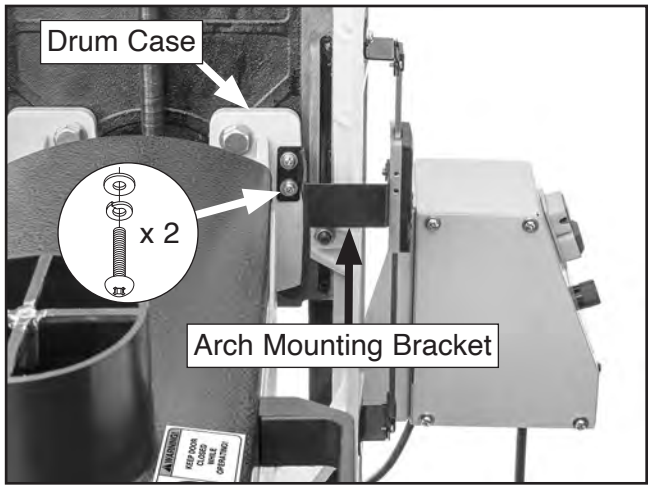

Figure 19. Arch mounting bracket attached to drum case.

19. Install CR2032 battery in digital depth gauge (see **Figure 20**).

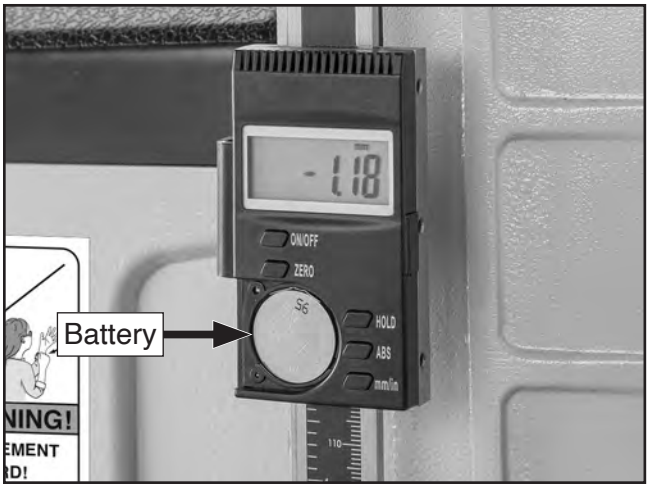

Figure 20. Battery installed in depth gauge.

20. Attach (1) right and (1) left table mounting block to (1) table mounting bracket with (4) M8-1.25 x 25 flat head screws (see **Figure 21**).

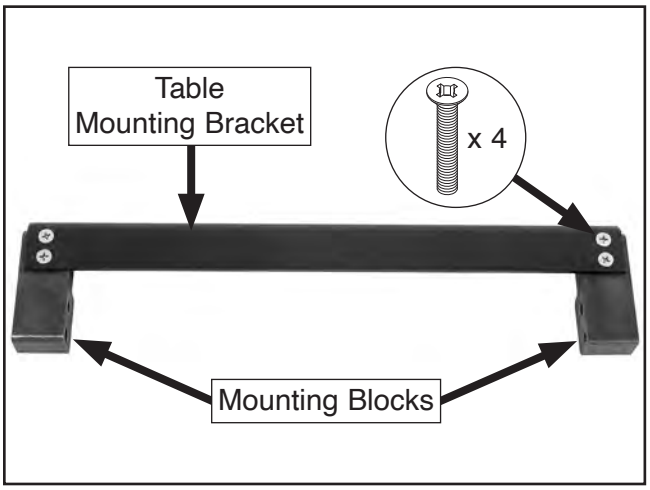

Figure 21. Table mounting blocks attached to bracket.

Note: *Pre-installed shoulder screws in mounting blocks should face away from other mounting block (see **Figure 22**).*

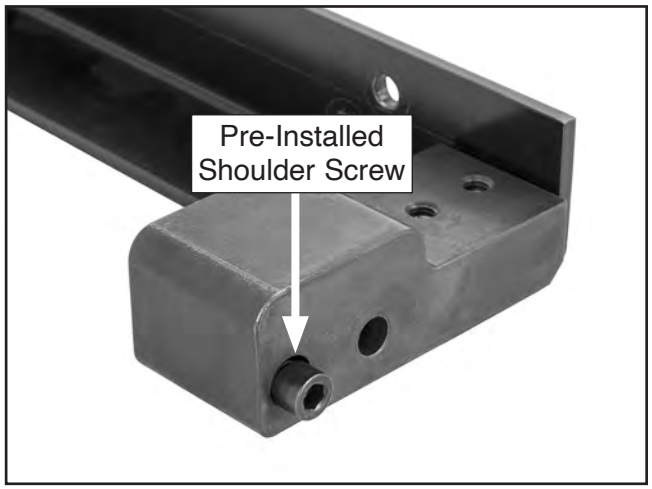

Figure 22. Mounting block installed correctly.

21. Repeat **Step 20** with remaining table mounting bracket.

22. Attach (2) table mounting brackets to table frame under conveyor table with (8) M8-1.25 x 16 cap screws, 8mm lock washers, and 8mm flat washers (see **Figure 23**).

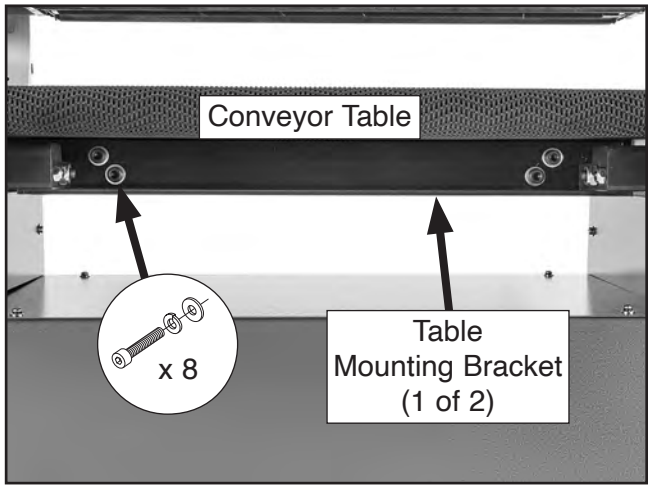

Figure 23. Table mounting bracket attached to table frame.

23. Attach (2) right table folding brackets to right mounting blocks as shown in **Figure 24** with (2) M10-1.5 x 65 shoulder screws, 10mm flat washer, and M10-1.5 lock nut.

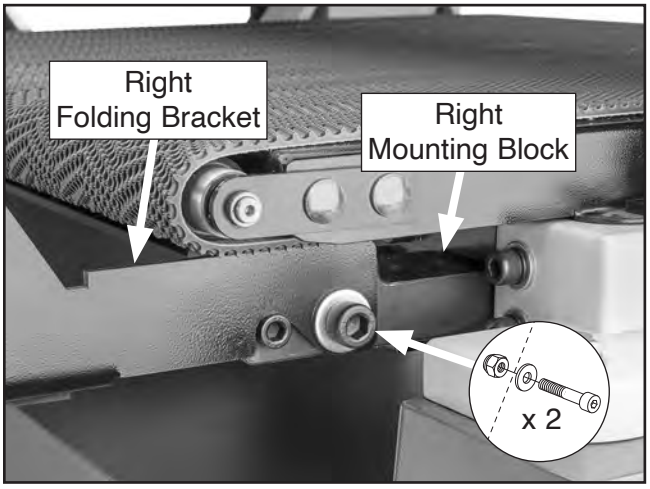

Figure 24. Right table folding bracket installed.

24. Repeat **Step 23** with (2) left table folding brackets.

25. Attach (2) extension tables to folding brackets with (8) M8-1.25 x 20 carriage bolts, 8mm flat washers, 8mm lock washers, and M8-1.25 hex nuts (see **Figure 25**).

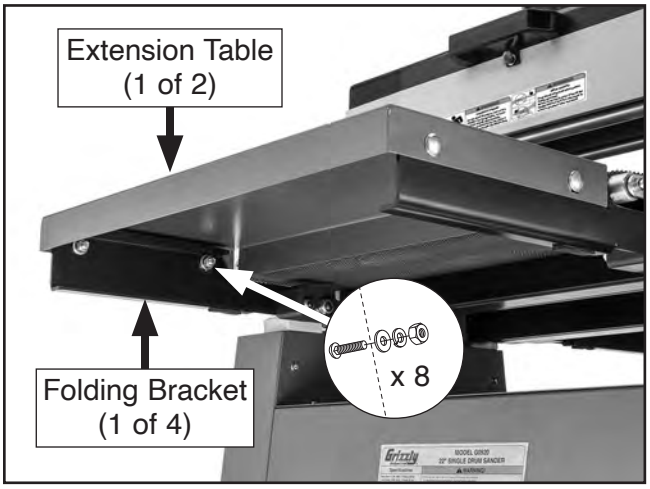

Figure 25. Extension tables installed.

26. Use straightedge to check extension table alignment with conveyor table (see **Figure 26**).

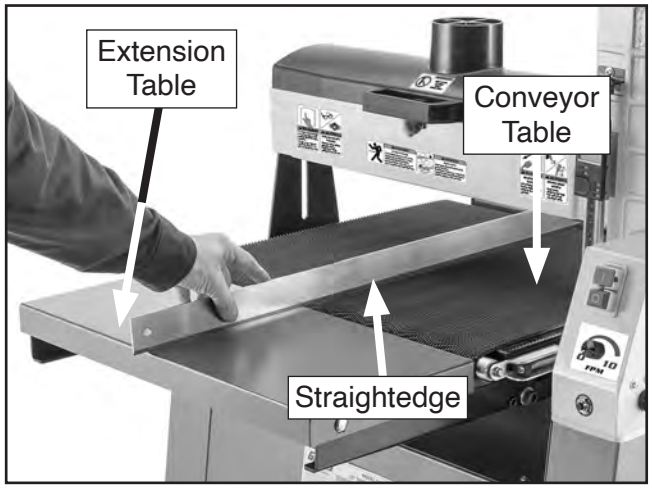

Figure 26. Checking extension table alignment.

— If straightedge *is* flat against conveyor table and both extension tables, no adjustment is required. If anchoring machine to floor, proceed to **Anchoring to Floor** on **Page 21**. Otherwise, proceed to **Dust Collection** on **Page 21**.

— If straightedge is *not* flat against conveyor table and both extension tables, proceed to **Step 27**.

27. For extension table(s) not aligned to conveyor table, loosen carriage bolts from **Step 25**, adjust table until it is aligned with conveyor table, and tighten bolts.

— If straightedge *is* flat against conveyor table and both extension tables, no further adjustment is required. If anchoring machine to floor, proceed to **Anchoring to Floor** on **Page 21**. Otherwise, proceed to **Dust Collection** on **Page 21**.

— If straightedge is still not flat against conveyor table and both extension tables, proceed to **Step 28**.

28. For extension table(s) not aligned to conveyor table, loosen cap screws from **Step 22**.

29. Adjust (2) set screws shown in **Figure 27** until extension table is even with conveyor table.

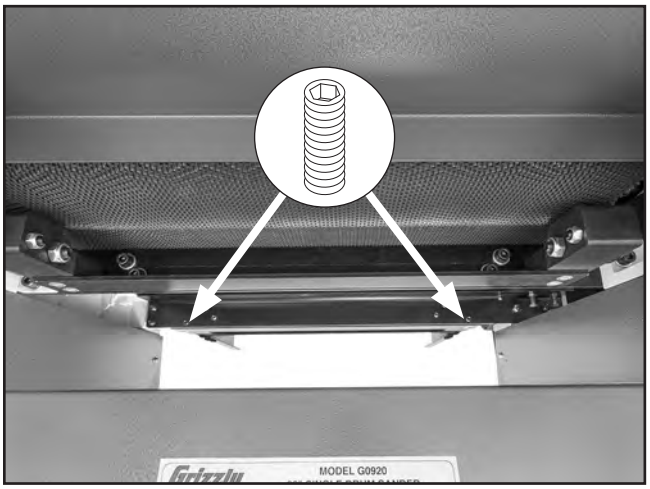

Figure 27. Location of table alignment set screws.

30. Once both extension tables are even with conveyor table, tighten cap screws from **Step 22** to secure extension tables.

If anchoring machine to floor, proceed to **Anchoring to Floor** on **Page 21**. Otherwise, proceed to **Dust Collection** on **Page 21**.

Anchoring to Floor

Number of Mounting Holes 4
Diameter of Mounting Hardware..... ¼"

Anchoring machinery to the floor prevents tipping or shifting and reduces vibration that may occur during operation, resulting in a machine that runs slightly more quietly and feels more solid.

If the machine will be installed in a commercial or workplace setting, or if it is permanently connected (hardwired) to the power supply, local codes may require that it be anchored to the floor.

If not required by any local codes, fastening the machine to the floor is an optional step. If you choose not to do this with your machine, we recommend placing it on machine mounts, as these provide an easy method for leveling and they have vibration-absorbing pads.

Anchoring to Concrete Floors

Lag shield anchors with lag screws (see below) are a popular way to anchor machinery to a concrete floor, because the anchors sit flush with the floor surface, making it easy to unbolt and move the machine later, if needed. However, anytime local codes apply, you MUST follow the anchoring methodology specified by the code.

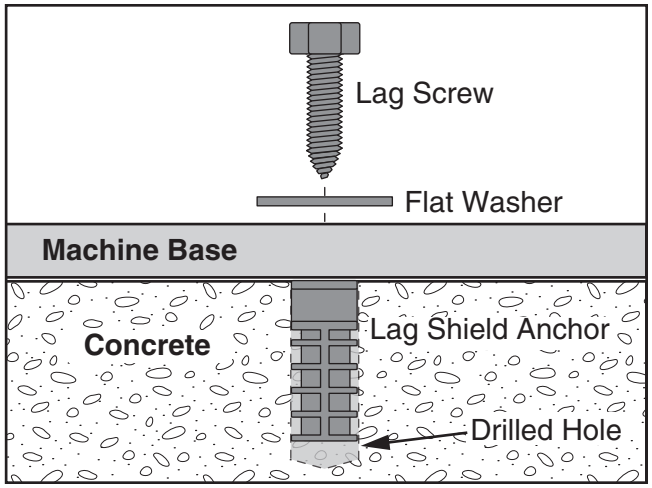

Figure 28. Popular method for anchoring machinery to a concrete floor.

Dust Collection

⚠CAUTION

This machine creates a lot of wood chips/dust during operation. Breathing airborne dust on a regular basis can result in permanent respiratory illness. Reduce your risk by wearing a respirator and capturing the dust with a dust-collection system.

Minimum CFM at Dust Port: 400 CFM
Do not confuse this CFM recommendation with the rating of the dust collector. To determine the CFM at the dust port, you must consider these variables: (1) CFM rating of the dust collector, (2) hose type and length between the dust collector and the machine, (3) number of branches or wyes, and (4) amount of other open lines throughout the system. Explaining how to calculate these variables is beyond the scope of this manual. Consult an expert or purchase a good dust collection "how-to" book.

To connect dust collection system to machine:

1. Fit 4" dust hose over dust port, as shown in **Figure 29**, and secure in place with hose clamp.

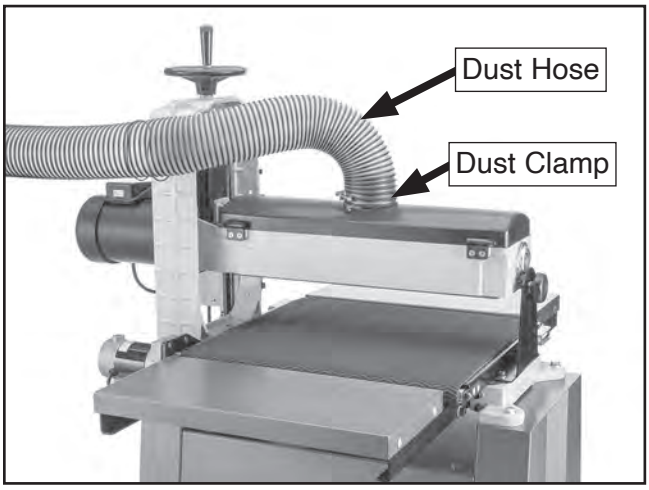

Figure 29. Dust hose attached to dust port.

2. Tug hose to make sure it does not come off.

   Note: *A tight fit is necessary for proper performance.*

Test Run

Once assembly is complete, test run the machine to ensure it is properly connected to power and safety components are functioning correctly.

If you find an unusual problem during the test run, immediately stop the machine, disconnect it from power, and fix the problem BEFORE operating the machine again. The **Troubleshooting** table in the **SERVICE** section of this manual can help.

The Test Run consists of verifying the following: 1) The motors power up and run correctly.

⚠WARNING

Serious injury or death can result from using this machine BEFORE understanding its controls and related safety information. DO NOT operate, or allow others to operate, machine until the information is understood.

⚠WARNING

DO NOT start machine until all preceding setup instructions have been performed. Operating an improperly set up machine may result in malfunction or unexpected results that can lead to serious injury, death, or machine/property damage.

To test run machine:

1. Clear all setup tools away from machine.

2. Plug drum motor cord 6-15 plug into outlet on side of switch box (see **Figure 30**).

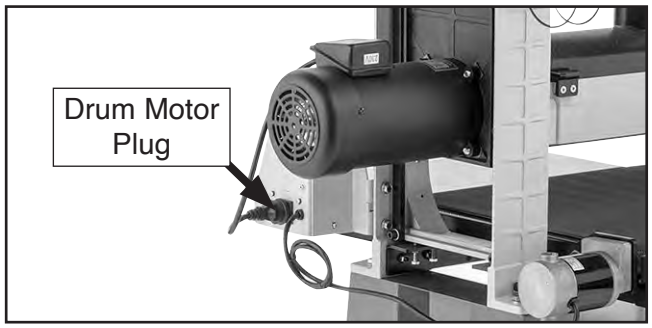

Figure 30. Feed motor plugged into switch box outlet.

3. Connect machine to power supply.

4. Turn conveyor feed rate dial all the way counterclockwise (see **Figure 31**).

5. Push ON button to turn machine ***ON*** (see **Figure 31**).

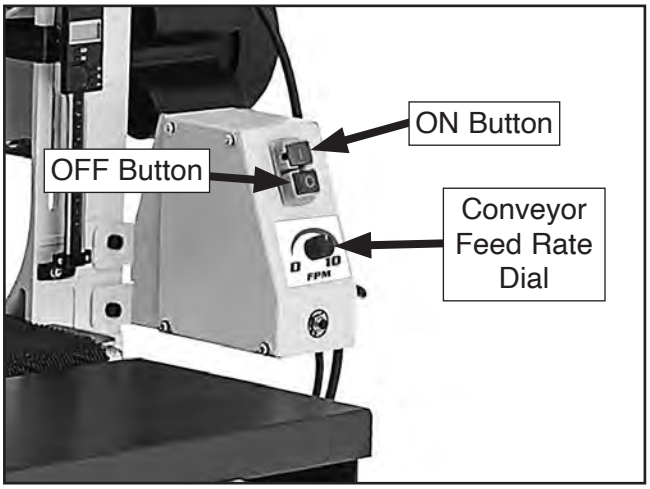

Figure 31. Control panel components.

6. Verify motor operation by slowly turning conveyor feed rate dial clockwise. Rotate dial back and forth to test variable-speed function.

   Motors should run smoothly and without unusual vibrations or noises.

7. Turn variable-speed dial all the way counterclockwise, then push OFF button to turn motors ***OFF*** (see **Figure 31**). Congratulations! the Test Run is complete.

Recommended Adjustments

For your convenience, the adjustments listed below have been performed at the factory and no further setup is required to operate your machine. However, because of the many variables involved with shipping, some of these adjustments may need to be repeated to ensure optimum results.

- **Tracking & Tensioning Conveyor Belt** (**Page 38**).
- **Aligning Drum** (**Page 41**).

SECTION 4: OPERATIONS

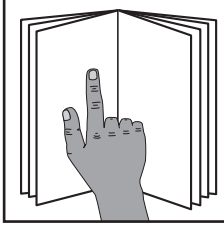

⚠WARNING

To reduce your risk of serious injury, read this entire manual BEFORE using machine.

⚠WARNING

To reduce risk of eye injury from flying chips or lung damage from breathing dust, always wear safety glasses and a respirator when operating this machine.





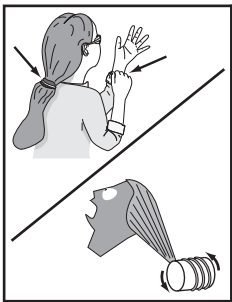

⚠WARNING

Keep hair, clothing, and jewelry away from moving parts at all times. Entanglement can result in death, amputation, or severe crushing injuries!

NOTICE

If you are not experienced with this type of machine, WE STRONGLY RECOMMEND that you seek additional training outside of this manual. Read books/magazines or get formal training before beginning any projects. Regardless of the content in this section, Grizzly Industrial will not be held liable for accidents caused by lack of training.

To complete a typical operation, the operator does the following:

1. Examines workpiece to verify it is suitable for sanding and to determine which sanding belt grit size to use.

2. Verifies workpiece has necessary outfeed clearance and support. If workpiece is overly long and difficult to handle, operator uses a roller support stand to assist with feeding.

3. Adjusts drum height to approximate workpiece thickness.

4. Puts on required safety glasses and respirator, and ensures dust collection is connected to dust port.

5. Turns machine and dust collector ***ON***.

6. Feeds workpiece into sander by placing front end on infeed side of conveyor table and supporting back end until workpiece engages with pressure rollers.

   Note: *During initial pass with new workpiece, operator adjusts drum height as necessary so workpiece only makes light contact with sanding belt and does not overload sander.*

7. Stands to side of machine and receives workpiece from outfeed side of conveyor table.

8. Rotates workpiece 180° horizontally and repeats **Steps 6–7**.

9. Lowers height of drum a small amount (typically ¼ of a full rotation of handwheel), then repeats feeding process of workpiece through sander.

10. Disconnects from power, changes sandpaper to finer grit, and connects to power to repeat sanding passes as needed

11. Turns sander ***OFF***, and disconnects it from power.

Inspecting Stock

Some workpieces are not safe to sand, or they may require further preparation before they can be safely sanded without increasing risk of injury to the operator or damaging the sanding belt or the sander.

Before sanding, inspect all workpieces for the following:

- ***Material Type:*** This machine is intended for sanding natural and man-made wood products, and laminate-covered wood products. This machine is NOT designed to sand glass, stone, tile, plastics, drywall, cementious backer board, metal, etc.

  Sanding metal objects can increase the risk of fire. Sanding improper materials increases the risk of respiratory harm to the operator and bystanders due to the especially fine dust inherently created by all types of sanding operations—even if a dust collector is used. Additionally, the life of the machine and sanding belts may be greatly reduced (or immediately damaged) from sanding improper materials.

- ***Foreign Objects:*** Nails, staples, dirt, rocks and other foreign objects are often embedded in wood. While sanding, these objects can become dislodged and tear the sanding belt. Always visually inspect your workpiece for these items. If they can't be removed, DO NOT sand the workpiece.

- ***Wet or "Green" Stock:*** Sanding wood with a moisture content over 20% causes unnecessary clogging and wear on the sanding belt, increases the risk of kickback, and yields poor results.

- ***Excessive Warping:*** Workpieces with excessive cupping, bowing, or twisting are dangerous to sand because they are unstable and often unpredictable when being sanded. DO NOT use workpieces with these characteristics!

Setting Depth of Cut

The optimum depth of cut will vary based on the type of wood, feed rate, and sandpaper grit. Attempts to remove too much material can cause jamming, wood burning, rapid paper wear or tearing, poor finish, and belt slippage.

Generally, a ¼ turn of the drum height handwheel (1/64" or 0.4mm vertical movement) per pass is acceptable for coarser grits or softer woods. A ⅛ turn of the handwheel is recommended for finer grits or harder woods. However, use your best judgement to produce good sanding results for your operation.

IMPORTANT: Keep in mind that, although the thickness of the workpiece is reduced during sanding, this process is not a replacement for thickness planing, which should be done with a planer or other acceptable tool/machine before beginning the sanding process.

NOTICE

Taking excessive depth of cut could cause drum motor to exceed available power source amperage. In this case, motor or power source circuit breaker will trip. If this should happen, disconnect machine from power, allow motor to cool, reset circuit breaker, then take smaller depth of cut.

To set depth of cut:

1. Loosen drum height lock knob (see **Drum height lock knob location.**).

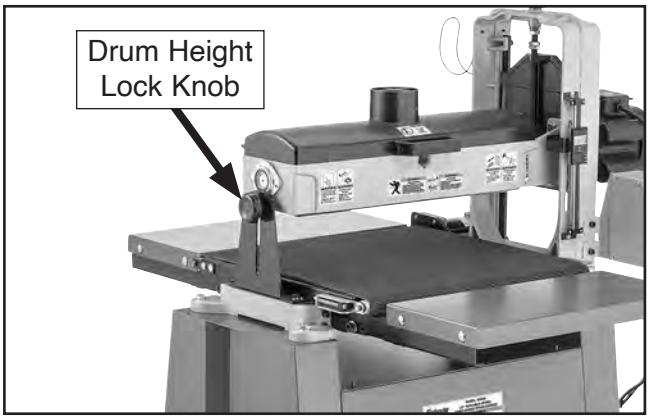

Figure 32. Drum height lock knob location.

2. Rotate drum height handwheel (see **Figure 33**) until sanding drum is well above conveyor table, then lower sanding drum, allowing a gap between workpiece and sanding drum.

   Note: *When adjusting drum to sand thicker workpiece, raise and then lower drum to remove backlash from adjustment mechanism.*

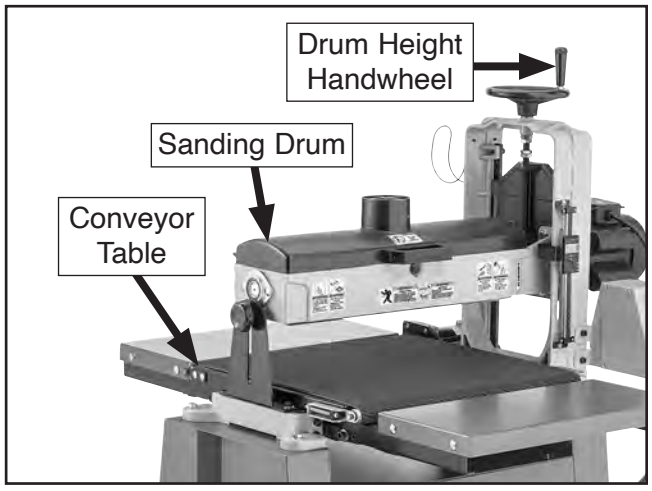

Figure 33. Drum height components.

3. Turn machine ***ON*** and feed workpiece into sander. SLOWLY lower sanding drum until workpiece makes light contact with sanding drum. This is correct height to begin sanding workpiece.

4. After initial pass, turn handwheel ¼ turn (1/64" or 0.4mm) or less; the maximum depth for most sanding conditions.

   Note: *Each full turn of table elevation handwheel raises conveyor table approximately 0.06" (1/16") or 1.5mm.*

Using Digital Depth Gauge

The digital depth gauge offers a precise reading of the distance between the table and the sanding drum when it is calibrated correctly. This reading is most useful when sanding workpieces of the same thickness, or when matching a thickness to create identical workpieces.

Press the ON/OFF button to display workpiece thickness, and the mm/in button to toggle between millimeters and inches (see **Figure 34**). The HOLD button will keep the displayed value from changing even when the drum height is changed, while the ABS button will switch to Absolute Value mode (where the distance from zero is displayed as a positive value).

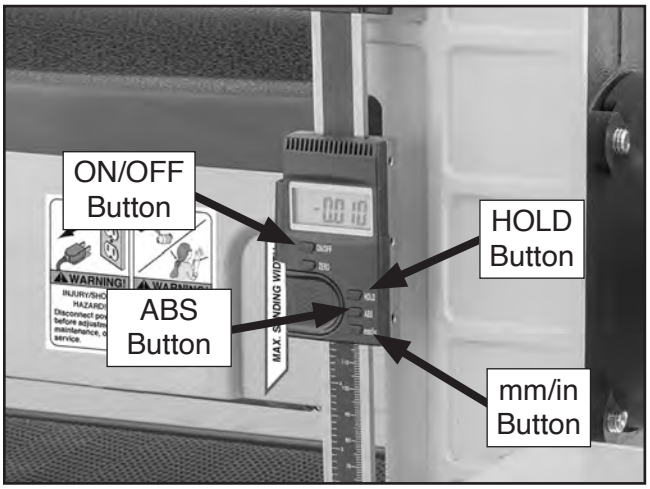

Figure 34. Digital depth gauge controls.

The depth gauge will turn ***ON*** automatically whenever drum height is changed. Once desired workpiece thickness is set, turn the gauge ***OFF*** to conserve the battery.

Follow the steps below to calibrate the digital depth gauge whenever the battery is changed.

To calibrate digital depth gauge:

1. With sanding belt installed, lower drum until it contacts conveyor belt on table.

2. Press ZERO button to calibrate gauge to absolute zero (see **Figure 35**).

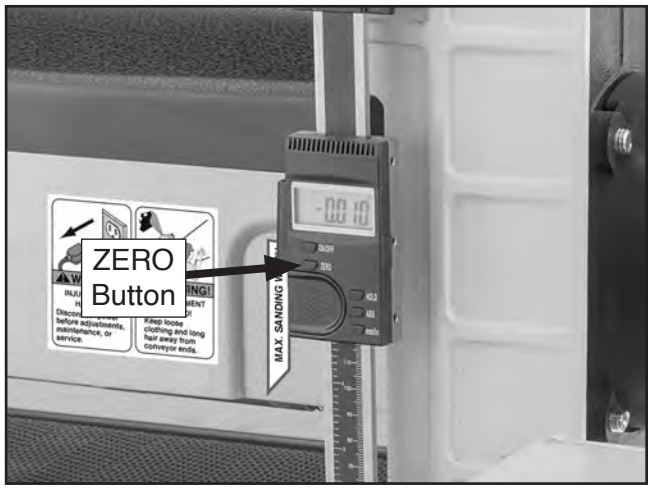

Figure 35. Location of ZERO button.

Adjusting Conveyor Feed Rate

The conveyor feed rate dial (see **Figure 36**) allows you to increase the feed rate from 0–10 FPM. The correct speed to use depends on the type of stock you are using (hardwood vs. softwood) and the stage of finish with that workpiece.



Figure 36. Location of conveyor feed rate dial.

As a general rule, a slower feed rate will sand the surface smoother, but runs the risk of burning the wood; a faster feed rate will remove material faster, but runs the risk of overloading the motor or damaging the sandpaper.

Use trial-and-error to determine the best settings for your specific applications.

To adjust feed belt speed:

1. Turn machine ***ON***.

2. Rotate conveyor feed rate dial (see **Figure 36**) clockwise to increase feed speed or counterclockwise to decrease conveyor feed speed.

Sanding Tips

- ⚠ **WARNING:** DO NOT edge sand boards. This can cause boards to kickback, causing serious personal injury. Edge sanding boards also can cause damage to the conveyor belt and sandpaper.

- ⚠ **WARNING:** DO NOT sand more than one board at a time side by side. Minor variations in thickness can cause one board to be propelled by the rapidly spinning sanding drum and ejected from the machine.

- ⚠ **WARNING:** NEVER stand directly in front of the infeed area of the machine. Failure to do so could result in severe personal injury.

- **NOTICE:** Overloading the motor or pushing the sander to failure weakens the electrical system. Repeatedly doing so is abuse to the machine that will cause motor, capacitor, or circuit breaker damage, which is not covered under warranty.

- **NOTICE:** DO NOT sand boards less than 9" long or less than ¼" thick to prevent damage to the workpiece and the drum sander.

- **NOTICE:** Sanding workpieces with high-resin content or with applied finishes can quickly contaminate sandpaper beyond the point where it can be properly cleaned. This will produce poor sanding results. In this case, use a different workpiece, remove the applied finishes, or frequently clean/replace the sandpaper strip.

- Replace coarse grit sandpaper with a finer grit to achieve a smoother finish.

- Lower the drum a maximum of ¼ turn of the handwheel until the workpiece is the desired thickness.

- Reduce snipe when sanding more than one board of the same thickness by feeding them into the sander with the front end of the second board touching the back end of the first board.

- Feed boards into the sander at different places on the conveyor to maximize sandpaper life and prevent uneven conveyor belt wear.

- Extend the life of the sandpaper by regularly using a PRO-STIK® sanding pad (see **Page 33**).

- Run wide stock through two or three times without adjusting table height. Turn stock 180° between passes to ensure an evenly sanded surface.

- When sanding workpieces with irregular surfaces, such as cabinet doors, take very light sanding passes to prevent gouges. When the drum moves from sanding a wide surface to sanding a narrow surface, the load on the motor will be reduced, and the drum will speed up, causing a gouge.

- When sanding workpieces with a bow or crown, place the high point up or cupped side down to prevent the workpiece from rocking and take very light passes.

- Feed the workpiece at an angle to maximize stock removal and sandpaper effectiveness, but feed the workpiece straight to reduce sandpaper grit scratches for the finish passes.

Choosing Sandpaper

There are many types of sanding belts to choose from. We recommend aluminum oxide for general workshop environments. Below is a chart that groups abrasives into different classes, and shows which grits fall into each class.

Grit	Class	Usage
60	Coarse	Fast sanding, dimensioning, and glue removal.
80–100	Medium	Removing planer marks and initial finish sanding.
120–180	Fine	Finish sanding.

The general rule of thumb is to sand a workpiece with progressively higher grit numbers, with no one grit increase of more than 50. Avoid skipping grits; the larger the grit increase, the harder it will be to remove the scratches from the previous grit.

Ultimately, the type of wood you use and your stage of finish will determine the best grit types to install on your sander.

Replacing Sandpaper

The Model G0920 is designed for 3" wide sandpaper rolls. Turn to **SECTION 5: ACCESSORIES** on **Page 32** for grit selection and model numbers.

Note: *If using sandpaper width narrower than 3", length will need to be increased. If using sandpaper wider than 3", length will need to be decreased.*

Items Needed **Qty**
Replacement Sandpaper 3" x 127½" 1
Utility Scissors 1

⚠WARNING

If sandpaper strip comes loose during operation, it could cause workpiece to bind and kickback at operator, which could result in serious personal injury. Always make sure sandpaper strip is properly installed and firmly secured by clamping devices before connecting sander to power.

Changing Sandpaper

1. DISCONNECT MACHINE FROM POWER!

2. Remove drum door lock knob shown in **Figure 37** to open drum door.

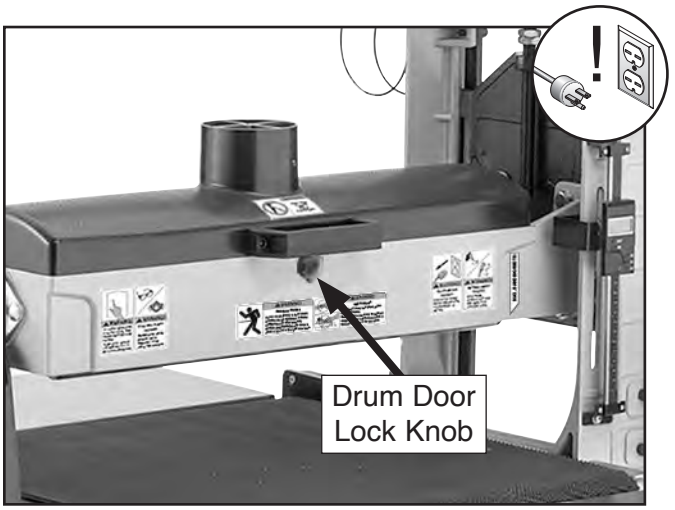

Figure 37. Location of drum door lock knob.

3. To release sandpaper, rotate drum until right side drum notch faces upward (see **Figure 40**).

4. Press stop plunger to extend into end of drum (see **Figure 40**), then rotate drum against stop plunger with moderate force and remove sandpaper end from clamp.

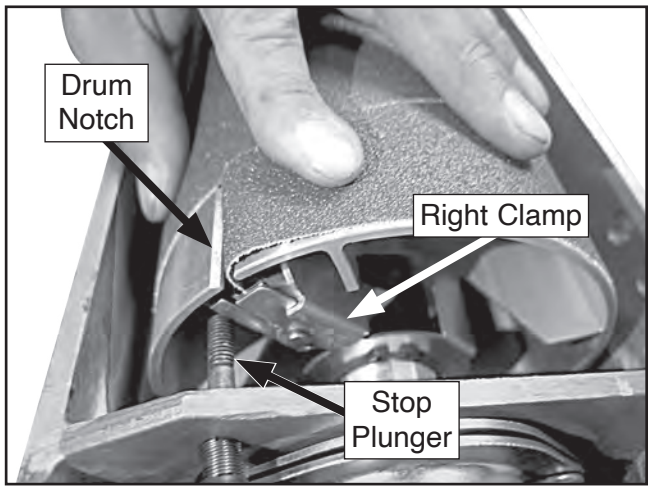

Figure 40. Location of stop plunger and right clamp.

5. Rotate drum to carefully remove sandpaper strip until you reach left end of drum.

   Note: *Take care not to rip or tear old sandpaper, so it can be used as template when cutting out replacement sandpaper strip.*

6. Squeeze left clamp and remove sandpaper from clamp (see **Figure 41**).

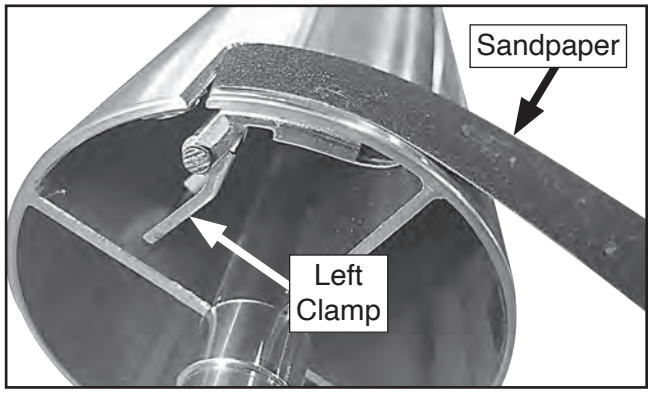

Figure 41. Location of left clamp (drum removed for clarity).

7. Use old sandpaper strip as pattern or use pattern in **Figure 38** to cut new piece of sandpaper.

   IMPORTANT: If directional arrows are printed on back side of sandpaper, they must face left, as shown in **Figure 38**.

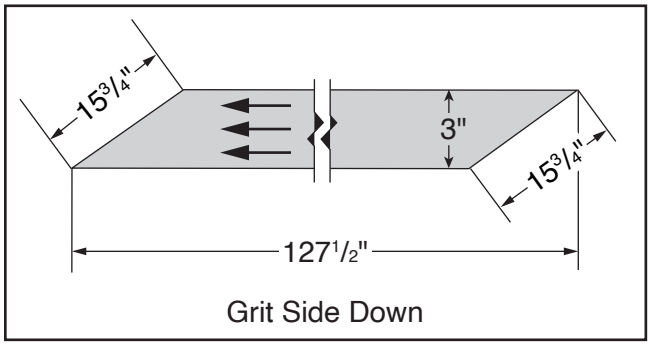

Figure 38. 3" sandpaper pattern for drum.

8. Insert corner of new sandpaper in slot at left side of drum and clamp with left clamp as shown in **Figure 39**.

   Note: *Tapered edge of sandpaper must be within ¼" of left drum edge.*

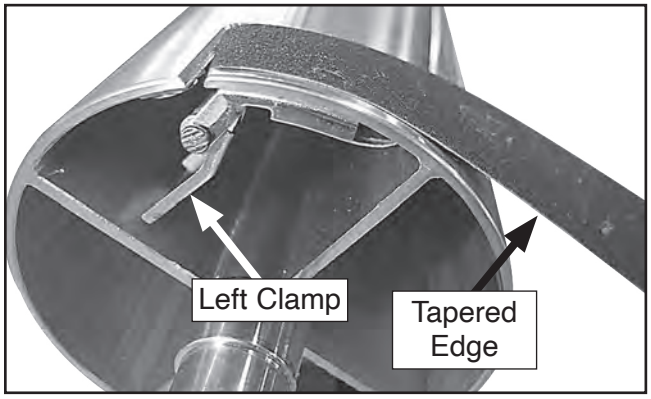

Figure 39. Location of left clamp and tapered edge (drum removed for clarity).

9. Wrap sandpaper around drum, ensuring there are no bubbles or overlapping edges.

10. When sandpaper reaches right side of drum, cut a notch to fit into clamp as illustrated in **Figure 42**. For step-by-step instructions to create notch, refer to **Creating Sandpaper Notch**.

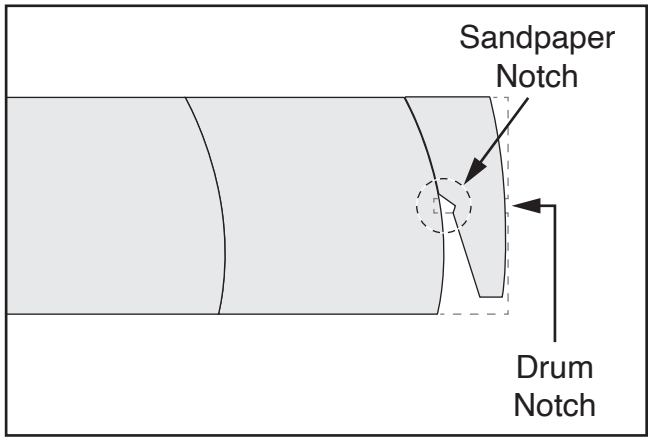

Figure 42. Sandpaper notch illustration.

11. Press stop plunger to extend into end of drum (see **Figure 43**) and rotate drum against plunger with moderate force until clamp opening is aligned with drum slot, then insert end of sandpaper fully into clamp.

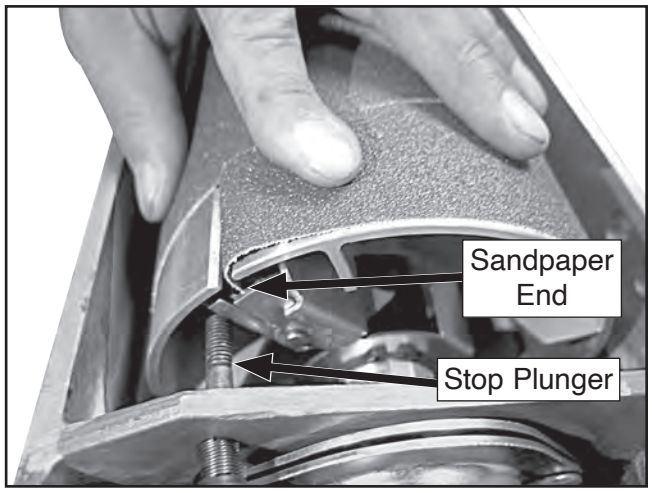

Figure 43. Sandpaper end inserted into clip.

12. Rotate drum back to allow stop plunger to retract.

13. Close drum door and secure with lock knob removed in **Step 2**.

Creating Sandpaper Notch

Cutting a notch at the right end of sandpaper (see **Figure 42**) will allow for easier insertion and a tighter hold by the clamp.

To create sandpaper notch:

1. Cut end of sandpaper at a slight angle approximately 1½" beyond drum notch (see **Figure 44**).

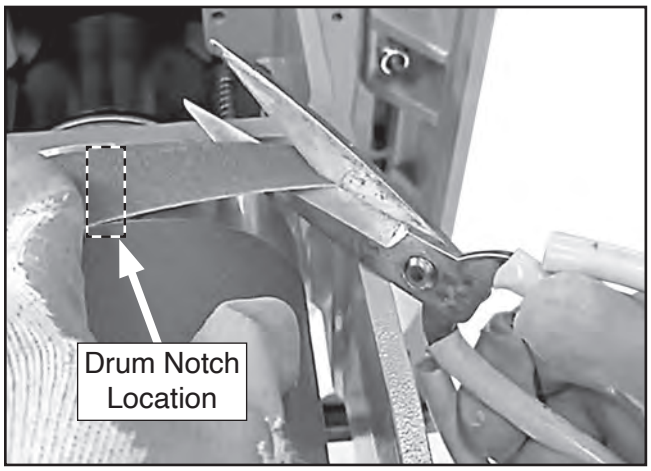

Figure 44. Sandpaper notch cut #1.

2. Make a 45° angle cut approximately 1/4" deep right above drum notch location (see **Figure 45**).

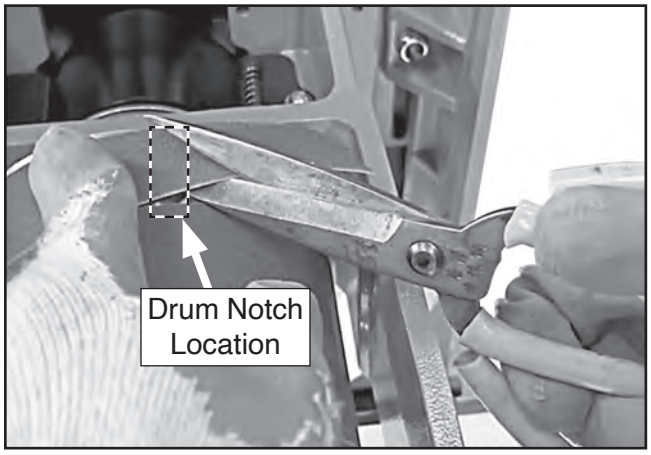

Figure 45. Sandpaper notch cut #2.

3. Make a 135° angle cut to edge of sandpaper (see **Figure 46**) to make a V-shaped cutout.



Figure 46. Sandpaper notch cut #3.

4. Cut from center of end of sandpaper up to just inside V-shaped cutout (see **Figure 47**).

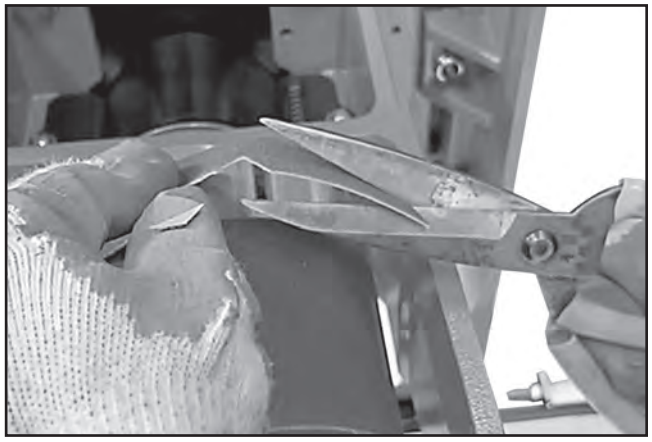

Figure 47. Sandpaper notch cut #4.

5. When finished, cutout should look similar to what is shown in **Figure 48**.

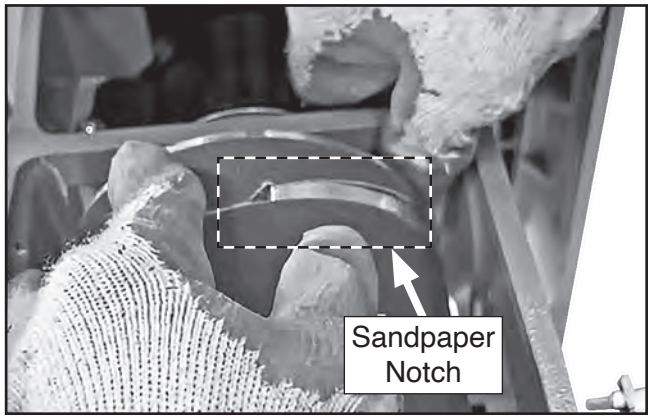

Figure 48. Example of sandpaper notch cut.

Folding Extension Tables

The extension tables can be folded down and out of the way when the extra support length is not needed.

Press the shoulder cap screw shown in **Figure 49** on either side of the extension table you wish to fold, and table will swing down.

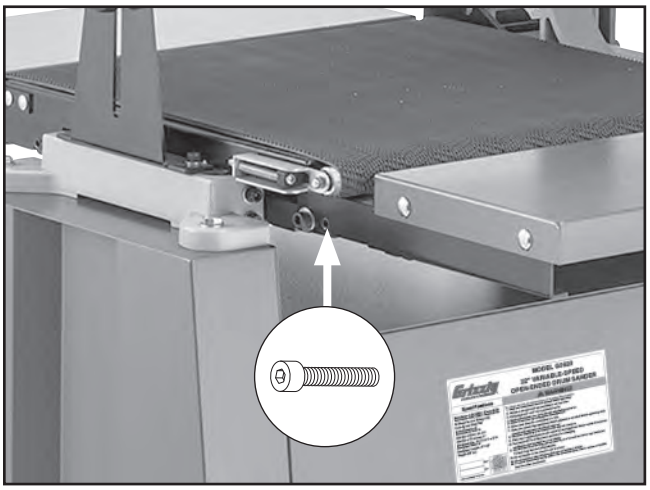

Figure 49. Location of table folding screws.

Note: *If the extension tables do not fold when the above screws are pressed, the shoulder screw in* ***Figure 50*** *must be loosened on either side.*

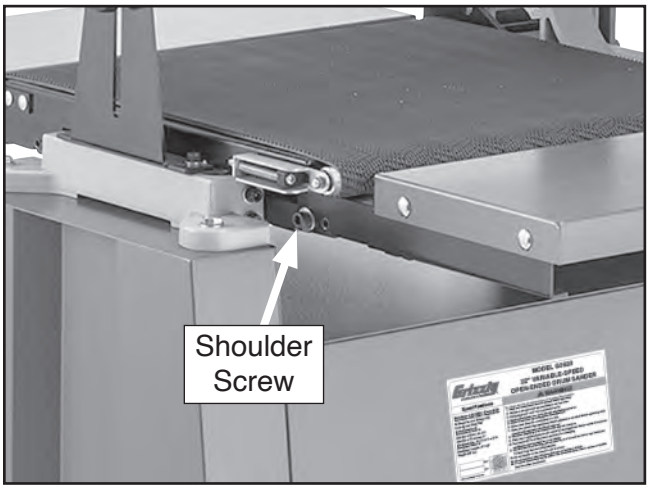

Figure 50. Folding bracket shoulder screws.

SECTION 5: ACCESSORIES

⚠WARNING

Installing unapproved accessories may cause machine to malfunction, resulting in serious personal injury or machine damage. To reduce this risk, only install accessories recommended for this machine by Grizzly.

NOTICE

Refer to our website or latest catalog for additional recommended accessories.

Aluminum Oxide Sanding Rolls 3" x 22'

T23880—60-Grit: Use for thickness sanding and glue removal.

T23881—80-Grit: Use for removing planer marks and initial finish sanding.

T23882—100-Grit: Use for removing planer marks and initial finish sanding.

T23883—120-Grit: Use for finish sanding.

T23884—150-Grit: Use for finish sanding.

T23885—180-Grit: Use for finish sanding.

T23886—220-Grit: Use for finish sanding.



Figure 51. 3" x 22' A/O sanding rolls.

T28172—14" x 39" Heavy-Duty Roller Table
T28369—14" x 78" Heavy-Duty Roller Table
T28370—14" x 118" Heavy-Duty Roller Table

Increase material handling and processing efficiency with one or more of these Heavy-Duty Roller Tables. Ideal for easily positioning material for cross cutting or cutting to length using a chop saw or metal cutting bandsaw. Simply place a roller table on one or both sides of your saw and production time is automatically improved!



Figure 52. Heavy-duty roller tables.

G1163P—1 HP Floor Model Dust Collector
G0710—1 HP Wall-Mount Dust Collector

Excellent point-of-use dust collectors that can be used next to the machine with only a small amount of ducting. Specifications: 450 CFM, 7.2" static pressure, 2-cubic-foot bag, and 30-micron filter. Motor is 1HP, 110V/220V, 14A/7A.

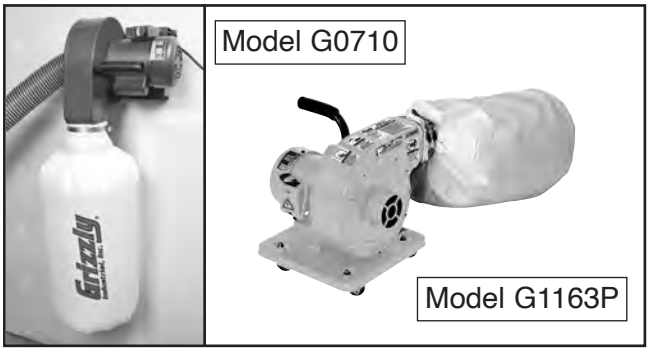

Figure 53. Point-of-use dust collectors.

SECTION 6: MAINTENANCE

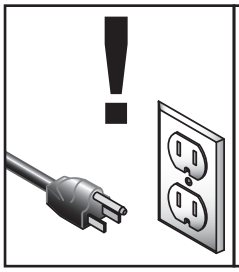

⚠WARNING
To reduce risk of shock or accidental startup, always disconnect machine from power before adjustments, maintenance, or service.

Schedule

For optimum performance from this machine, this maintenance schedule must be strictly followed.

Ongoing
To minimize your risk of injury and maintain proper machine operation, shut down the machine immediately if you ever observe any of the items below, and fix the problem before continuing operations:

- Loose mounting bolts.
- Damaged sanding belt.
- Worn switch.
- Worn or damaged cords or plugs.
- Any other unsafe condition.

Daily Maintenance
- Lubricate feed belt roller and drive bushings.

Monthly Check
- Clean/vacuum dust buildup from inside cabinet and off motor.

Biannual Maintenance
- Lubricate elevation leadscrew and slides.

Cleaning Machine

Cleaning the Model G0920 is relatively easy. Vacuum excess wood chips and sawdust, and wipe off the remaining dust with a dry cloth. If any resin has built up, use a resin dissolving cleaner to remove it.

Cleaning Sanding Belts

To increase the working life of your sanding belts, clean them whenever they decrease in performance due to heavy loading of material. Use a Model D3003 PRO-STIK® Cleaning Pad as shown in **Figure 54**.

To clean sanding belt:

1. DISCONNECT MACHINE FROM POWER!
2. Set drum height to thickness of cleaning pad.
3. Connect machine to power, then run pad through sander two or three times. DO NOT take too deep of a cut—the belt should barely touch cleaning pad!

Model D3003 PRO-STIK® Cleaning Pad
Extend the life of your sandpaper! Just feed this crepe-rubber cleaning pad through your drum sander to remove dust build-up from the sandpaper without damage. Measures 15" x 20" x ¾".



Figure 54. D3003 PRO-STIK® Cleaning Pad.

Lubrication

The bearings on the Model G0920 have been lubricated and sealed at the factory. No other care of these bearings is necessary unless they need replacement.

The feed belt bushings should be lubricated daily while the elevation leadscrew and slides should be lubricated periodically, depending on usage. See below for some lubrication products that Grizzly offers.

T26685—ISO 32 Moly-D Machine Oil, 1 Gal.
T23963—ISO 32 Moly-D Machine Oil, 5 Gal.
Moly-D oils are some of the best we've found for maintaining the critical components of machinery because they tend to resist run-off and maintain their lubricity under a variety of conditions. Buy in bulk and save with 5-gallon quantities.



Figure 55. ISO 32 machine oil.

Avoid using excess lubrication. Too much lubricant attracts sawdust and will clog the belt bushings.

Bushings

Lubrication Type..... Model T26685 (ISO 32)
Oil Amount..... As Needed
Check/Add Frequency..... Daily

Oil the bushings on each end of the conveyor belt feed rollers (see **Figure 56**).

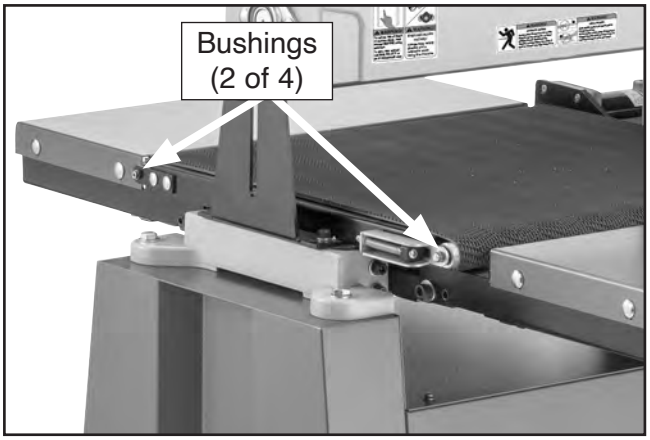

Figure 56. Bushing lubrication locations.

Elevation Leadscrew & Slides

Lubrication Type.....Dry Lube
Oil Amount..... As Needed
Check/Add Frequency..... 6 Months

Lubricate the elevation leadscrew and slides with dry lubrication every six months. Clean the screw and slides (see **Figure 57**, then apply lubrication on screw threads and slides. Move the drum up and down to spread the lubrication thoroughly.

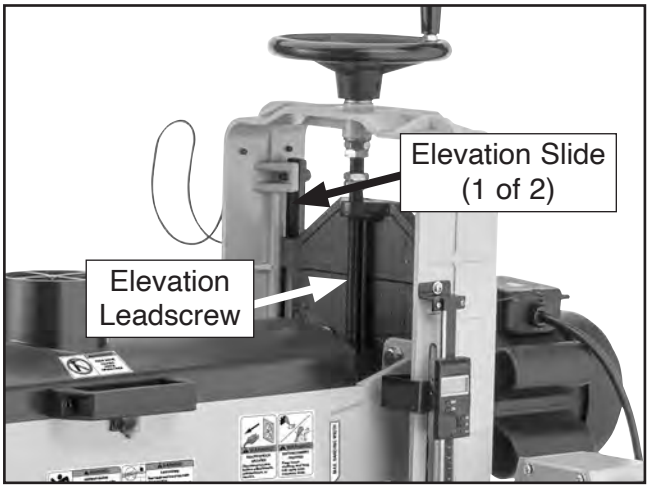

Figure 57. Elevation lubrication locations.

SECTION 7: SERVICE

Review the troubleshooting procedures in this section if a problem develops with your machine. If you need replacement parts or additional help with a procedure, call our Technical Support. **Note:** *Please gather the serial number and manufacture date of your machine before calling.*

Troubleshooting

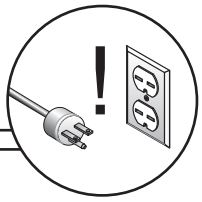

Motor & Electrical

Symptom	Possible Cause	Possible Solution
Machine does not start, or power supply breaker immediately trips after startup.	1. Machine circuit breaker tripped. 2. Incorrect power supply voltage or circuit size. 3. Power supply circuit breaker tripped or fuse blown. 4. Motor wires connected incorrectly. 5. Extension cord too long. 6. Wiring broken, disconnected, or corroded. 7. ON/OFF or machine circuit breaker switch at fault. 8. Circuit board at fault. 9. Drum motor or drum motor bearings at fault.	1. Reset circuit breaker. 2. Ensure correct power supply voltage and circuit size. 3. Ensure circuit is free of shorts. Reset circuit breaker or replace fuse. 4. Correct motor wiring connections. 5. Move machine closer to power supply; use shorter extension cord. 6. Fix broken wires or disconnected/corroded connections. 7. Replace switch/circuit breaker. 8. Inspect/replace if at fault. 9. Replace drum motor.
Machine turns ***ON*** but conveyor belt does not start/ stalls.	1. Motor brushes worn out. 2. Variable-speed dial/potentiometer at fault. 3. Circuit board at fault. 4. Conveyor feed motor or bearings at fault.	1. Remove/replace both brushes as a set (**Page 45**). 2. Inspect/replace if at fault. 3. Inspect/replace if at fault. 4. Replace conveyor feed motor.
Machine stalls or is underpowered.	1. Workpiece material not suitable for machine. 2. Feed rate/sanding depth too great. 3. Machine undersized for task. 4. Too much pressure on pressure rollers. 5. Motor overheated, tripping machine circuit breaker. 6. Extension cord too long. 7. Motor or motor bearings at fault.	1. Only sand wood/ensure moisture is below 20%. 2. Reduce feed rate (**Page 27**)/sanding depth (**Page 25**). 3. Clean (**Page 33**)/replace (**Page 29**) sandpaper. 4. Reduce pressure roller pressure. 5. Clean motor/let cool, and reduce workload. Reset breaker. 6. Move machine closer to power supply; use shorter extension cord. 7. Replace motor.

Motor & Electrical (Cont.)

Symptom	Possible Cause	Possible Solution
Machine has vibration or noisy operation.	1. Motor, motor mount, or component loose. 2. Stand feet not adjusted properly. 3. Loose/worn drum bearings. 4. Motor fan rubbing on fan cover. 5. Motor bearings at fault.	1. Replace damaged or missing bolts/nuts or tighten if loose. 2. Adjust stand feet to stabilize machine. 3. Tighten/replace drum bearings. 4. Fix/replace motor fan cover or loose/damaged fan. 5. Test by rotating shaft; rotational grinding/loose shaft requires bearing replacement.

Operation

Symptom	Possible Cause	Possible Solution
Sandpaper clogs quickly.	1. Sanding depth too deep/feed rate too slow. 2. Workpiece has high moisture content or sap. 3. Incorrect sandpaper grit. 4. Poor dust collection. 5. Sandpaper loaded with sawdust and gum. 6. Worn sandpaper.	1. Reduce sanding depth (**Page 25**)/increase feed rate (**Page 27**). 2. Use different stock, or accept characteristics and plan on cleaning (**Page 33**)/replacing (**Page 29**) sandpaper frequently; remove applied finishes before sanding. 3. Use correct sandpaper grit for operation (**Page 29**). 4. Unclog ducts; close gates to improve suction; re-design dust collection system. 5. Clean (**Page 33**)/replace (**Page 29**) sandpaper. 6. Replace sandpaper (**Page 29**).
Sandpaper comes off of drum or is loose.	1. Sandpaper not properly wrapped onto drum. 2. Sandpaper not cut to correct dimensions. 3. Torn or damaged sandpaper. 4. Foreign object in workpiece. 5. Sanding drum not parallel to table.	1. Re-install sandpaper (**Page 29**). 2. Use sandpaper cut to correct dimensions (**Page 30**). 3. Replace sandpaper (**Page 29**). 4. Sand only clean workpieces. 5. Align sanding drum to table (**Page 41**).
Sandpaper tears off drum.	1. Sanding drum not parallel with table. 2. Sandpaper overlapping. 3. Sanding depth is too deep.	1. Adjust sanding drum parallel to table (**Page 41**). 2. Re-install sandpaper (**Page 29**). 3. Reduce sanding depth (**Page 25**).
Burn marks on workpiece.	1. Using too fine of sanding grit for sanding depth. 2. Sandpaper loaded with sawdust and gum. 3. Feed rate too slow. 4. Sandpaper not properly wrapped onto drum. 5. Worn sandpaper.	1. Use coarser grit sandpaper (**Page 29**) or decrease sanding depth (**Page 25**). 2. Clean (**Page 33**)/replace (**Page 29**) sandpaper. 3. Increase feed rate (**Page 27**). 4. Re-install sandpaper (**Page 29**). 5. Replace sandpaper (**Page 29**).
Glazed workpiece surface after sanding.	1. Sanding wet stock. 2. Sandpaper loaded with sawdust and gum. 3. Sanding stock with high amount of applied finishes.	1. Only sand stock that has moisture content below 20%. 2. Clean (**Page 33**)/replace (**Page 29**) sandpaper. 3. Use different stock, or accept characteristics and plan on cleaning (**Page 33**)/replacing (**Page 29**) sandpaper frequently; remove applied finishes before sanding.
Workpiece slips on conveyor or kicks out.	1. Sanding depth too deep/feed rate too fast. 2. Conveyor belt dirty or worn. 3. Pressure rollers not properly adjusted.	1. Reduce sanding depth (**Page 25**)/feed rate (**Page 27**). 2. Clean/replace conveyor belt (**Page 39**). 3. Properly adjust pressure roller height (**Page 44**).
Conveyor belt slips or does not track correctly.	1. Conveyor belt tension not properly adjusted. 2. Conveyor belt tracking not properly adjusted. 3. Conveyor belt worn. 4. Workpiece too heavy.	1. Properly adjust conveyor belt tension (**Page 38**). 2. Properly adjust conveyor belt tracking (**Page 38**). 3. Replace conveyor belt (**Page 39**). 4. Use lighter workpiece.

Operation (Cont.)

Symptom	Possible Cause	Possible Solution
Uneven workpiece thickness from side to side.	1. Drum height lock knob not tight and sanding drum deflects up. 2. Sanding drum not parallel to table. 3. Gibs too loose. 4. Conveyor belt worn.	1. Fully tighten lock knob after setting drum height. 2. Align sanding drum to table (**Page 41**). 3. Adjust gibs (**Page 41**). 4. Replace conveyor belt (**Page 39**).
Drum height handwheel hard to rotate.	1. Drum height lock knob too tight. 2. Leadscrew and nut clogged with sawdust. 3. Gibs too tight.	1. Loosen drum height lock knob. 2. Clean and lubricate leadscrew and nut (**Page 34**). 3. Adjust gibs (**Page 41**).
Workpiece pulls to one side during sanding operations.	1. Sanding drum not parallel with table.	1. Adjust sanding drum parallel to table (**Page 41**).
Ripples or lines in workpiece.	1. Uneven feed rate. 2. Conveyor belt flexing or vibrating. 3. Sanding drum deflecting from workpiece.	1. Maintain even feed rate through entire sanding operation. 2. Reduce sanding depth (**Page 25**)/reduce feed rate (**Page 27**). Tighten loose fasteners. 3. Make sure drum height lock knob is tight.
Snipe marks in workpiece.	1. Pressure rollers not properly adjusted. 2. Workpiece too long to be supported without additional help. 3. Incorrect sandpaper grit.	1. Properly adjust pressure roller height (**Page 44**). 2. Use an assistant or roller stands/tables on infeed and outfeed ends of conveyor to keep workpiece from bending. 3. Use correct sandpaper grit for operation (**Page 29**).
Poor dust collection.	1. Dust collection lines incorrectly sized for this machine. 2. Dust collector underpowered or too far away from machine.	1. Use at least an 8" main line with two 6" branch lines that each Y into 4" at machine. 2. Upgrade dust collector or decrease distance from dust collector to machine.

Tracking & Tensioning Conveyor Belt

The conveyor belt must track straight. If the feed belt tracks to either side, then the tracking must be corrected or the conveyor belt will become damaged and have to be replaced. The tracking was properly set at the factory, but wear may cause it to track unevenly eventually.

Tracking the conveyor belt is a balancing process that takes patience and some trial-and-error. Usually you must over-tighten the loose side to make the belt move to the middle of the rollers, then loosen that same side to make the feed belt stay in position. If the tracking screw is over-adjusted, then the process will need to be repeated until the conveyor belt stays in the middle.

The conveyor belt will stretch when new and will eventually need to be tensioned. This is most obvious if the conveyor belt starts slipping on the rollers.

When you tension the conveyor belt, focus on adjusting the tensioning bolts in even increments. Adjusting one side more than the other will cause tracking problems, which will require you to make additional adjustments to get the sander tracking correctly again.

Items Needed	**Qty**
Open-End Wrench 10mm	1
Phillips Head Screwdriver #2	1
Calipers	1

⚠ CAUTION

Working around moving conveyor and parts presents pinch/entanglement hazards that can cause personal injury. Use extreme care to keep hands clear of in-running pinch points while adjusting tracking nut/screw when machine is running. Roll up sleeves and do not wear gloves or other apparel that could become entangled in moving parts.

Tracking Conveyor Belt

1. Turn machine ***ON*** and watch conveyor belt track.

   — If belt quickly moves to one side, immediately stop machine and adjust belt tracking before running conveyor again. Proceed to **Step 2**.

   — If belt tracks evenly, no adjustment is required.

2. Hold lock nut still on side that conveyor belt tracks towards and tension tracking adjustment screw until conveyor belt tracks in opposite direction (see **Figure 58**).

   Note: *Small tracking changes may take up to three minutes before they are noticeable.*

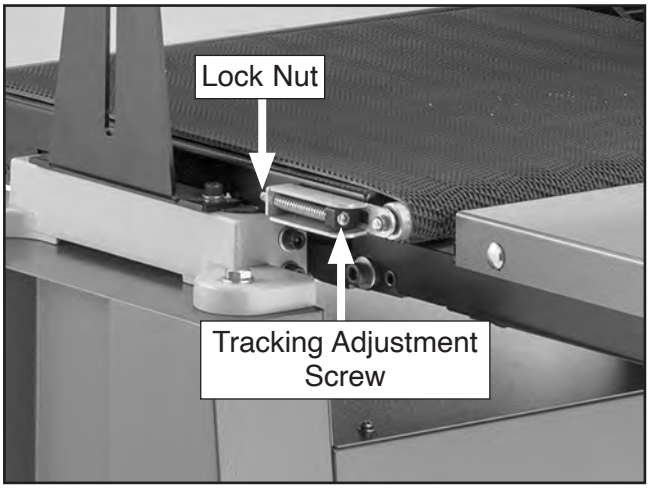

Figure 58. Conveyor belt tracking adjustment screw and lock nut.

3. When conveyor belt is near middle of rollers or table, loosen tracking adjustment screw while holding lock nut still until feed belt stops moving and tracks straight.

   — If conveyor belt tracks too far to other side, hold lock still and loosen tracking adjustment screw as necessary to bring it back. Repeat **Steps 2–3** until tracking is correct.

4. Tracking affects tension, so refer to **Tensioning Conveyor Belt** on next page.

Tensioning Conveyor Belt

1. Turn machine ***ON*** and confirm that conveyor belt tracking does not need to be adjusted. Refer to **Tracking Conveyor Belt** on **Page 38**.

2. Check that ends of both tensioning screws extend evenly approximately 1/4" beyond lock nut, as shown in **Figure 59**.

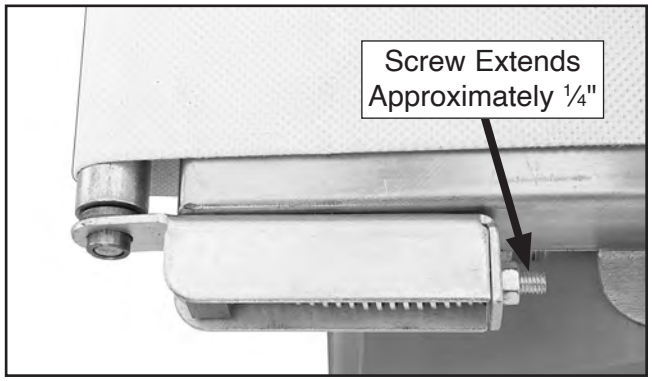

Figure 59. Example of tensioning screw extending beyond lock nut.

— If belt slips during operation, rotate screws clockwise in small amounts while holding lock nuts still (see **Figure 60**) until belt no longer slips on the rollers.

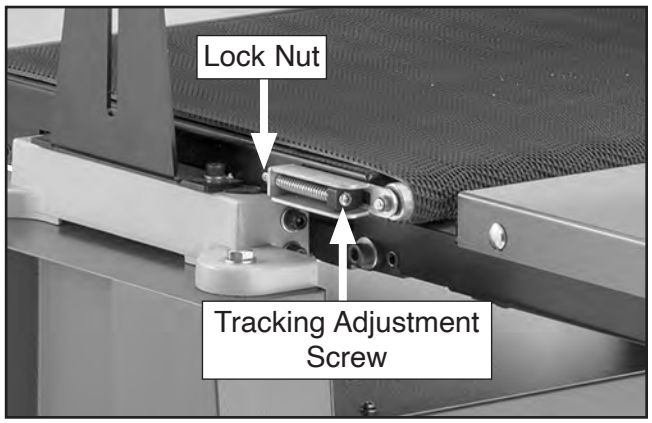

Figure 60. Conveyor belt tracking adjustment screw and lock nut.

Note: *When tensioned properly, belt should not lift off table, slide back and forth, or slip.*

NOTICE

DO NOT over-tension conveyor belt. This may cause premature wearing of belt and bushings, and cause strain on motor.

Replacing Conveyor Belt

Replacing the conveyor belt is a relatively simple process, but it will require re-tensioning and tracking once the new conveyor belt is installed.

Items Needed	Qty
Permanent Marker	1
Open-End Wrench 11mm	1
Phillips Head Screwdriver #2	1
Hex Wrench 6mm	1
An Assistant	1
Replacement Conveyor Belt (P0920009)	1
Calipers	1

To replace conveyor belt:

1. DISCONNECT MACHINE FROM POWER!

2. Use permanent marker to mark feed belt tensioning screws where they extend beyond lock nuts (see **Figure 59**). This step will aid you in returning screws to their original position, reducing amount of tracking and tensioning necessary.

3. Fully release belt tension (see **Tracking & Tensioning Conveyor Belt** on **Page 38** for detailed instructions).

4. Remove (4) table cap screws and flat washers shown in **Figure 61**.

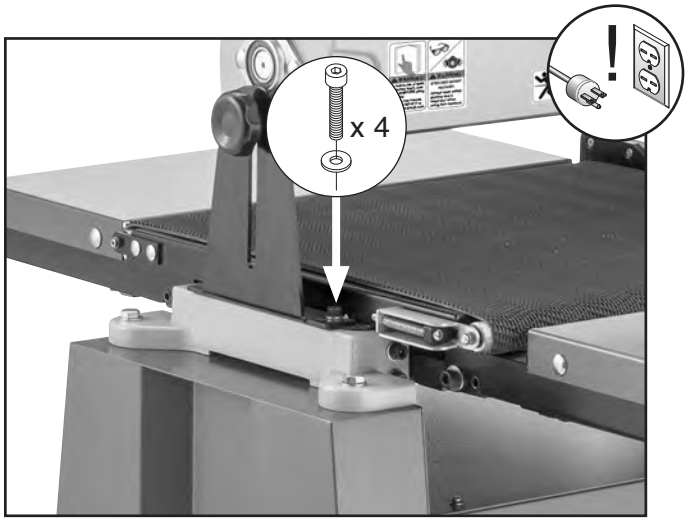

Figure 61. Location of table cap screws.

5. Have an assistant help you remove feed table and motor assembly from machine.

6. Slide conveyor belt off of table and clean any dirt or dust off of table and rollers.

7. Slide new conveyor belt on then re-install feed table and motor assembly on machine.

8. Re-install hardware removed in **Step 4**.

9. Tighten tensioning screws until lines marked in **Step 2** extend just beyond lock nuts.

Note: *Conveyor belt will stretch slightly when new and will need to be re-tensioned after short amount of use.*

10. Track and tension new conveyor belt according to instructions on **Page 38**.

Note: *One side of belt may need to be tighter than other for belt to track straight.*

Making Blocks

The blocks described here will be required to complete the remaining service procedures in this section.

Items Needed	Qty
6' Long 2x4	1
Miter Saw (or Circular Saw)	1
Jointer	1
Table Saw	1

To make blocks:

1. Edge joint concave edge of 2x4 flat on jointer, as shown in **Figure 62**.

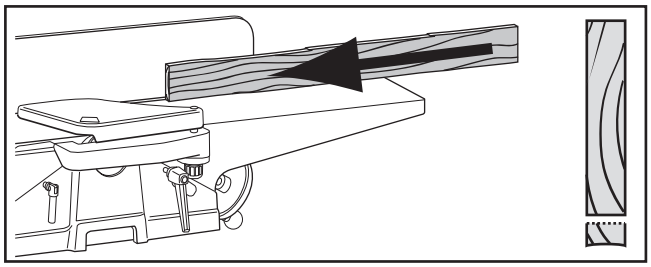

Figure 62. Edge jointing on jointer.

2. Place jointed edge of 2x4 against table saw fence and rip cut just enough off opposite side to square up two edges of 2x4, as shown in **Figure 63**.

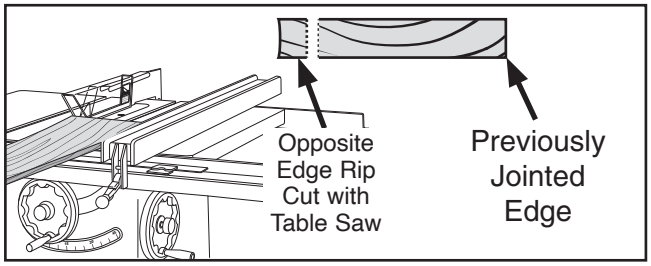

Figure 63. Rip cutting on table saw.

3. Cut 2x4 into two even pieces to make two 36" long wood gauge blocks.

Note: ***Steps 1-2*** *can be skipped, but having gauge blocks of equal height is critical to accuracy of adjustments.*

Adjusting Gibs

The gibs apply pressure to the slides of the sanding head (see **Figure 64**). This allows the sanding head assembly to accurately move up and down when using the drum height handwheel.

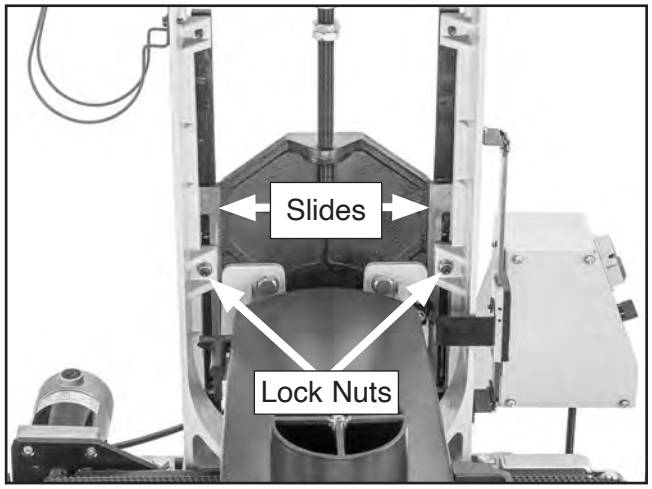

Figure 64. Location of rear slides and lock nuts.

If the gibs are too loose, the sanding drum will deflect up during operation, which will result in poor sanding results.

If the gibs are too tight, it will be difficult to adjust the sanding drum height, which will cause excessive wear on the parts of the elevation system.

Tools Needed	**Qty**
Socket 13mm	1
Hex Wrench 6mm	1

To adjust gibs:

1. DISCONNECT MACHINE FROM POWER!

2. Adjust lock nuts shown in **Figure 57** on both gibs an equal amount, by 1/4 turns.

3. Rotate drum height handwheel to test drum movement.

   Note: *Tighten lock nuts to increase gib pressure.*

4. Repeat **Step 2–3** until you are satisfied with drum movement.

Aligning Drum

Aligning the drum parallel to the conveyor belt (see **Figure 58**) is critical for sanding accuracy. Care should be taken to make the tolerances as close as possible (within 0.010" from one side to the other) when adjusting the drum height.

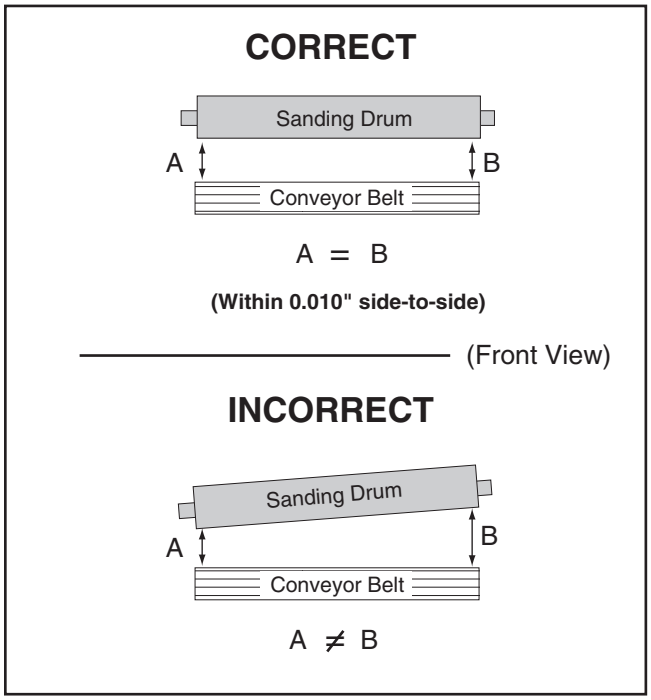

Figure 65. Drum parallel to conveyor belt.

Aligning Drum

Tools Needed:	**Qty**
Wrench or Socket 13mm, 17mm	1
Hex Wrench 6mm	1
Gauge Blocks	2
Feeler Gauge Set	1

To align sanding drum:

1. DISCONNECT MACHINE FROM POWER!

2. Make sure gibs are properly adjusted (refer to **Adjusting Gibs**).

3. Remove sandpaper from drum and place gauge blocks as shown in **Figure 66**.

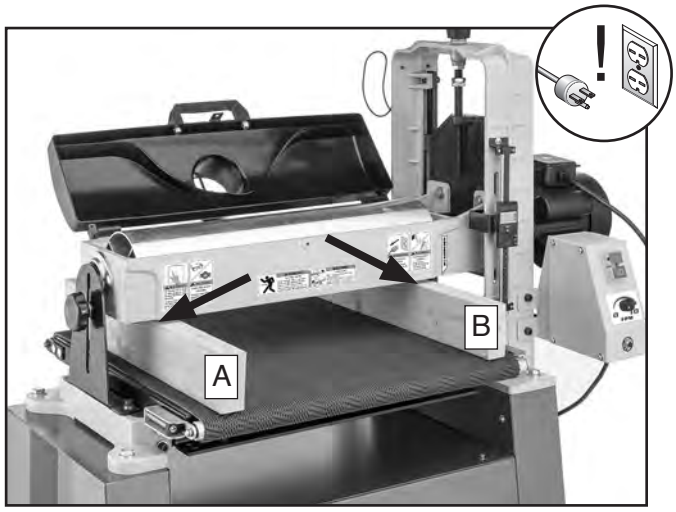

Figure 66. Example of gauge blocks placed under drum.

4. Lower drum until gauge blocks just touch drum.

5. Raise drum one full crank of handwheel.

6. Starting at A board (see **Figure 66**), find largest size feeler gauge that can pass between drum and your gauge block. (Feeler gauge should slide with moderate resistance, without forcing drum to roll.)

7. Repeat **Step 6** at B board.

   — If difference between A and B is 0.010" or less, then no adjustment is necessary.

   — If difference between A and B is more than 0.010", then one end must be adjusted to within 0.010" of other. Proceed to **Step 8**.

8. Loosen (4) lock nuts and (2) hex bolts shown in **Figure 67**.

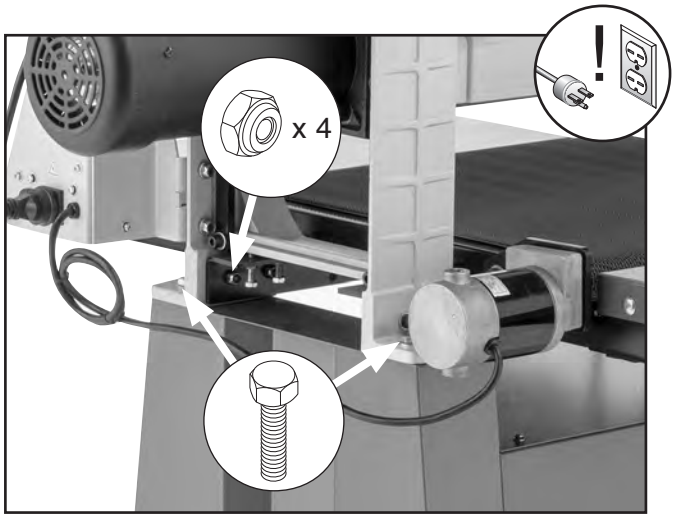

Figure 67. Mounting hardware to loosen for drum adjustment.

9. Refer to measurements taken in **Steps 6**–**7**.

   — If A measurement was larger than B measurement, loosen (2) hex nuts shown in **Figure 68** and tighten (2) hex bolts until measurements are equal.

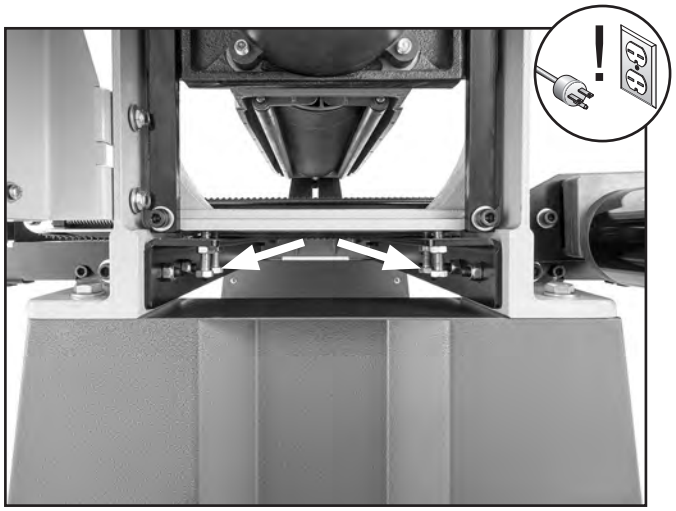

Figure 68. Adjustment hardware for right side.

— If B measurement was larger than A measurement, loosen (2) hex nuts shown in **Figure 69** and tighten (2) hex bolts until measurements are equal.

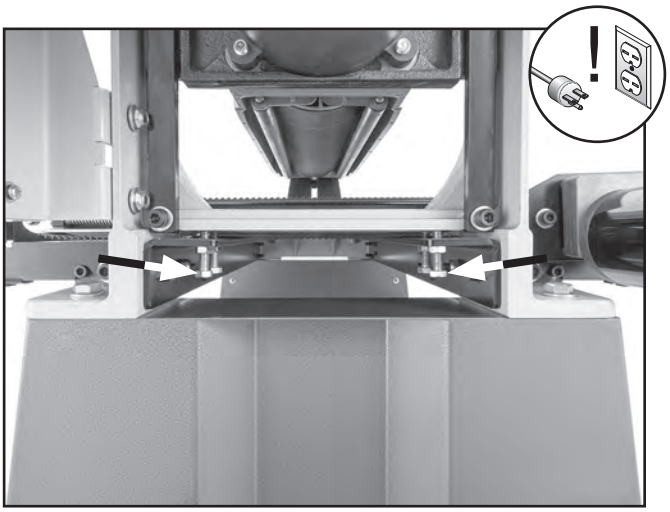

Figure 69. Adjustment hardware for left side.

10. When difference between A and B is 0.002" or less, tighten hex nuts loosened in **Step 9** to secure setting.

— If hex bolt are adjusted and A still exceeds B by more than 0.002", use included conveyor table shims to further adjust alignment (see **Adding Conveyor Table Shims** for detailed instructions).

11. Tighten hex bolts from **Step 8**.

12. Repeat **Steps 6–7** to confirm difference between A and B is 0.010" or less before installing sandpaper and resuming operation.

Adding Conveyor Table Shims

The conveyor table shims included with the G0920 can be inserted between the conveyor table and the drum lift adjustment plate to aid in drum alignment.

Items Needed	Qty
An Assistant	1
Wrench or Socket 10, 12mm	1 Ea.
Hex Wrench 5mm, 6mm	1 Ea.
Gauge Blocks	2
Feeler Gauge Set	1

To add conveyor table shims:

1. DISCONNECT MACHINE FROM POWER!

2. Remove (2) table cap screws and flat washers shown in **Figure 70**.

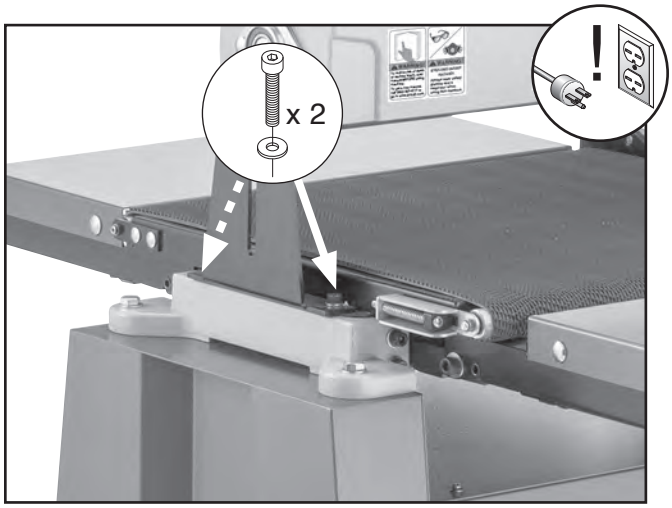

Figure 70. Location of table cap screws.

3. Have an assistant lift left side of drum just enough so you can insert shim(s) between drum lift adjustment plate and conveyor table (see **Figure 71**).

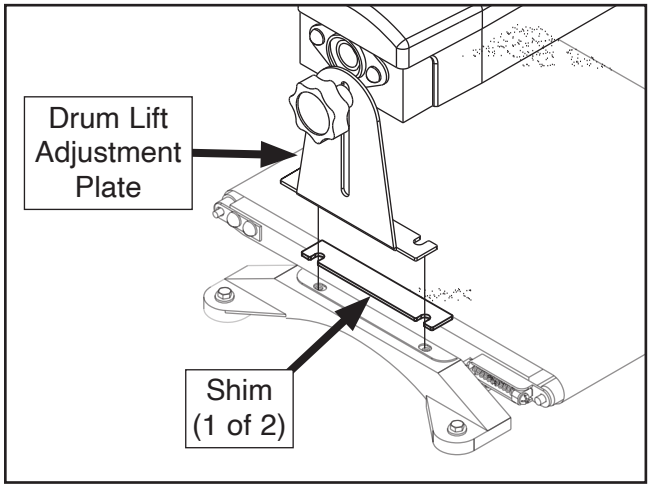

Figure 71. Shim inserted between drum lift adjustment plate and conveyor table.

4. Re-install hardware removed in **Step 2**.

5. Refer to **Aligning Drum** on **Page 41** to check/adjust drum alignment before tightening hex bolts in **Figure 67** on **Page 42** to secure adjustments.

Adjusting Pressure Rollers

Two spring-loaded pressure rollers help maintain consistent pressure on the workpiece as it passes the sanding drum. The pressure rollers have been set correctly at the factory. DO NOT adjust the pressure rollers unless absolutely necessary.

When properly positioned, the pressure rollers should be approximately 0.004" lower than the drum.

Adjusting the pressure rollers is a fine balance between too much pressure and not enough. Too much pressure can cause problems like snipe or overloading the motor. Not enough pressure may allow the workpiece to kick out of the sander towards the operator.

Items Needed	**Qty**
Gauge Blocks (see **Page 40**)	2
Feeler Gauge Set	1
Hex Wrench 5/32", 5mm	1 Ea.

To adjust pressure rollers:

1. DISCONNECT MACHINE FROM POWER!

2. Place gauge blocks on feed belt as shown in **Figure 72**.

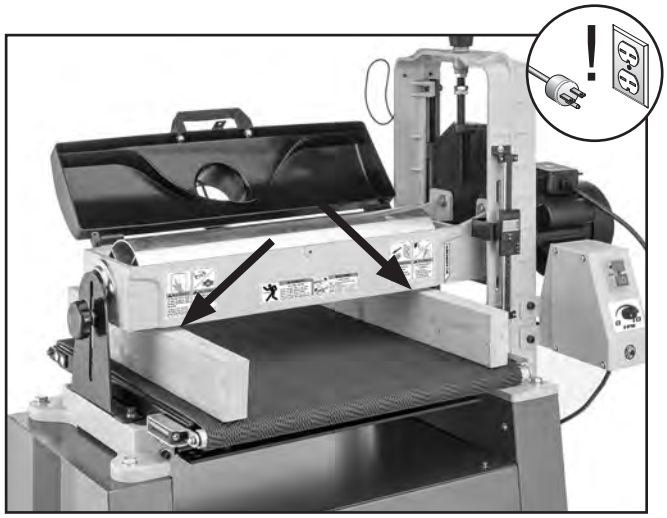

Figure 72. Example of gauge blocks placed under drums.

3. Lower drum until blocks just touch the rear pressure roller.

4. Find largest size feeler gauge that can pass between sanding drum and gauge block. (Feeler gauge should slide with moderate resistance, without forcing drum to roll.)

— If gap is 0.004" (0.1mm) or less, then no adjustment of rear pressure roller is necessary. Proceed to **Step 5** to check front pressure roller.

— If gap is more than 0.004" (0.1mm), then rear pressure roller must be adjusted. Proceed to **Step 5** to check front pressure roller before adjusting.

5. Lower drum until gauge blocks just touch drum.

6. Find largest size feeler gauge that can pass between front pressure roller and gauge block. (Feeler gauge should slide with moderate resistance, without forcing drum to roll.)

— If gap is 0.004" (0.1mm) or less, then no adjustment of front pressure plate is necessary. If rear pressure roller required adjustment, proceed to **Step 7**, otherwise pressure rollers should not be adjusted.

— If gap is more than 0.004" (0.1mm), then front pressure plate must be adjusted. Proceed to **Step 7**.

7. Remove drum door lock knob shown in **Figure 73** to open drum door.

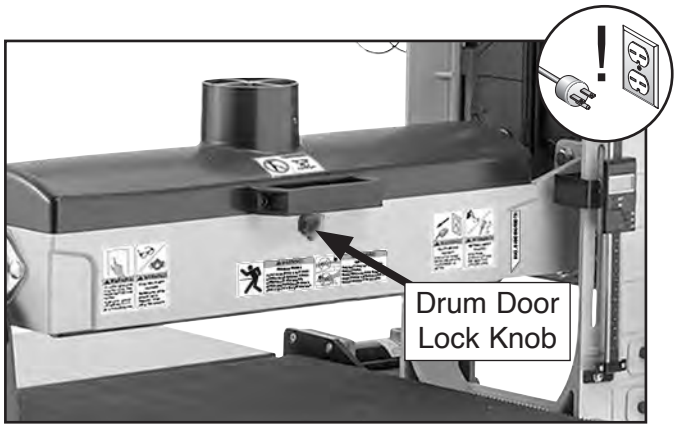

Figure 73. Location of drum door lock knob.

8. At each end of pressure roller that requires adjustment, tighten set shown in **Figure 74** an equal amount.

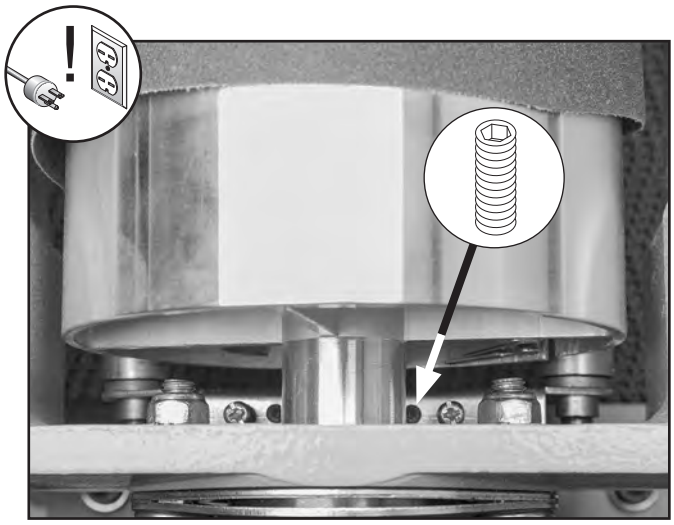

Figure 74. Pressure roller adjustment set screw.

— Rotate screws clockwise to lower pressure roller or counterclockwise to raise pressure roller.

9. Adjust rollers until they are 0.004" (0.1mm) lower than height of the drum.

10. Close drum door and secure with drum door lock knob.

Replacing Brushes

This sander is equipped with a universal motor that uses two carbon brushes to transmit electrical current inside the motor. These brushes are considered to be regular "wear items" or "consumables" that will need to be replaced during the life of the motor. The frequency of required replacement is often related to how much the motor is used and how hard it is pushed.

Replace the carbon brushes at the same time when the motor no longer reaches full power, or when the brushes measure less than ¼" long (new brushes are ⅝" long).

If your machine is used frequently, we recommend keeping an extra set of these replacement brushes on-hand to avoid any downtime.

Tools Needed:	**Qty**
Flat Head Screwdriver 1/4	1
Pair of Motor Brushes (P0920171)	1

To replace motor brushes:

1. DISCONNECT MACHINE FROM POWER!

2. Remove brush caps and worn brushes (see **Figure 75**) from conveyor belt motor.

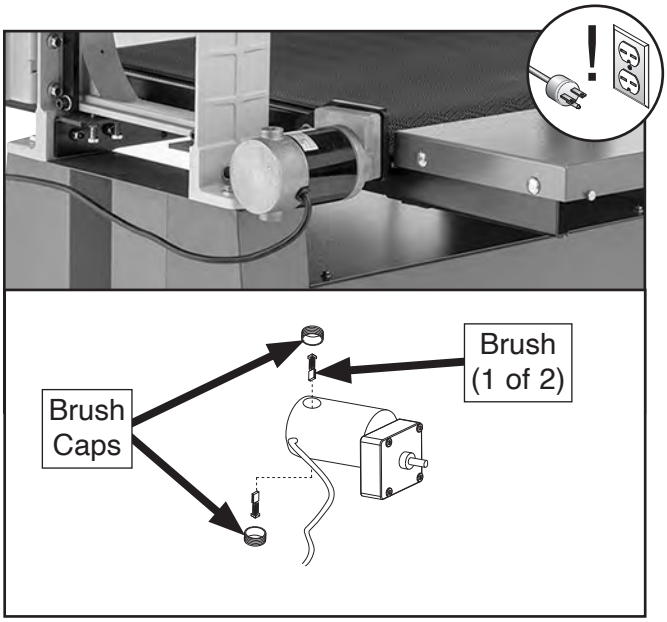

Figure 75. Location of motor cover cap screws.

3. Replace both motor brushes and install brush caps.

SECTION 8: WIRING

These pages are current at the time of printing. However, in the spirit of improvement, we may make changes to the electrical systems of future machines. Compare the manufacture date of your machine to the one stated in this manual, and study this section carefully.

If there are differences between your machine and what is shown in this section, call Technical Support at (570) 546-9663 for assistance BEFORE making any changes to the wiring on your machine. An updated wiring diagram may be available. **Note:** *Please gather the serial number and manufacture date of your machine before calling. This information can be found on the main machine label.*

⚠WARNING
Wiring Safety Instructions

SHOCK HAZARD. Working on wiring that is connected to a power source is extremely dangerous. Touching electrified parts will result in personal injury including but not limited to severe burns, electrocution, or death. Disconnect the power from the machine before servicing electrical components!

MODIFICATIONS. Modifying the wiring beyond what is shown in the diagram may lead to unpredictable results, including serious injury or fire. This includes the installation of unapproved aftermarket parts.

WIRE CONNECTIONS. All connections must be tight to prevent wires from loosening during machine operation. Double-check all wires disconnected or connected during any wiring task to ensure tight connections.

CIRCUIT REQUIREMENTS. You MUST follow the requirements at the beginning of this manual when connecting your machine to a power source.

WIRE/COMPONENT DAMAGE. Damaged wires or components increase the risk of serious personal injury, fire, or machine damage. If you notice that any wires or components are damaged while performing a wiring task, replace those wires or components.

MOTOR WIRING. The motor wiring shown in these diagrams is current at the time of printing but may not match your machine. If you find this to be the case, use the wiring diagram inside the motor junction box.

CAPACITORS/INVERTERS. Some capacitors and power inverters store an electrical charge for up to 10 minutes after being disconnected from the power source. To reduce the risk of being shocked, wait at least this long before working on capacitors.

EXPERIENCING DIFFICULTIES. If you are experiencing difficulties understanding the information included in this section, contact our Technical Support at (570) 546-9663.

NOTICE

The photos and diagrams included in this section are best viewed in color. You can view these pages in color at www.grizzly.com.

COLOR KEY

BLACK	Bk	BLUE	Bl	YELLOW	Yl	LIGHT BLUE	Lb
WHITE	Wt	BROWN	Br	YELLOW GREEN	Yg	BLUE WHITE	Bw
GREEN	Gn	GRAY	Gy	PURPLE	Pu		
RED	Rd	ORANGE	Or	PINK	Pk	TURQUOISE	Tu

Wiring Diagram

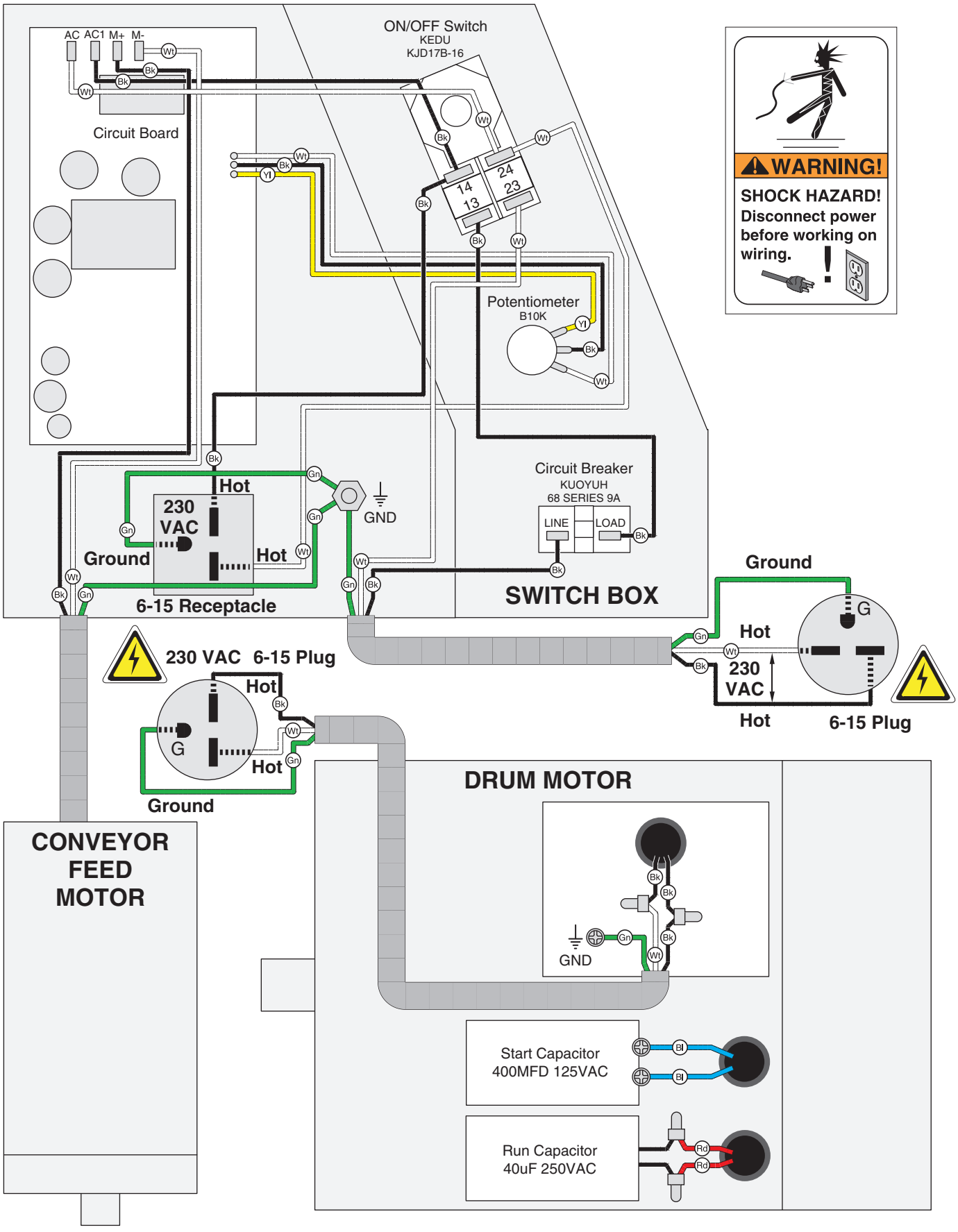

Electrical Component Photos



Figure 76. Switch box.



Figure 78. Start capacitor.

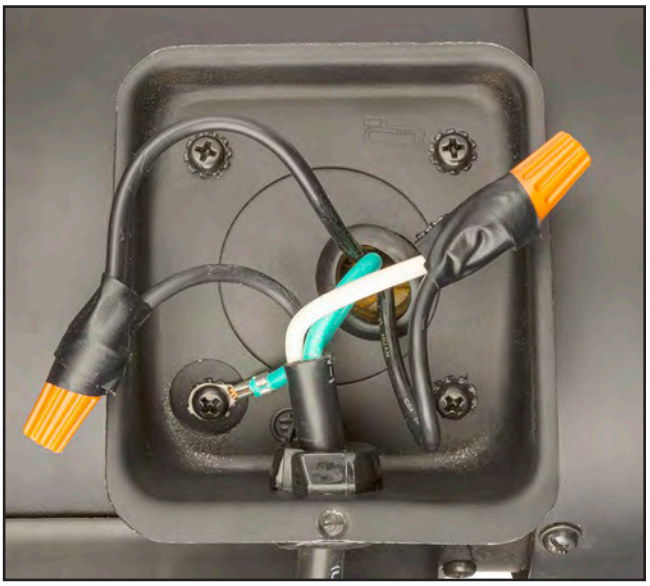

Figure 77. Motor junction box.



Figure 79. Run capacitor.

STOP *READ ELECTRICAL SAFETY ON PAGE 46!*

SECTION 9: PARTS

We do our best to stock replacement parts when possible, but we cannot guarantee that all parts shown are available for purchase. Call **(800) 523-4777** or visit **www.grizzly.com/parts** to check for availability.

Main

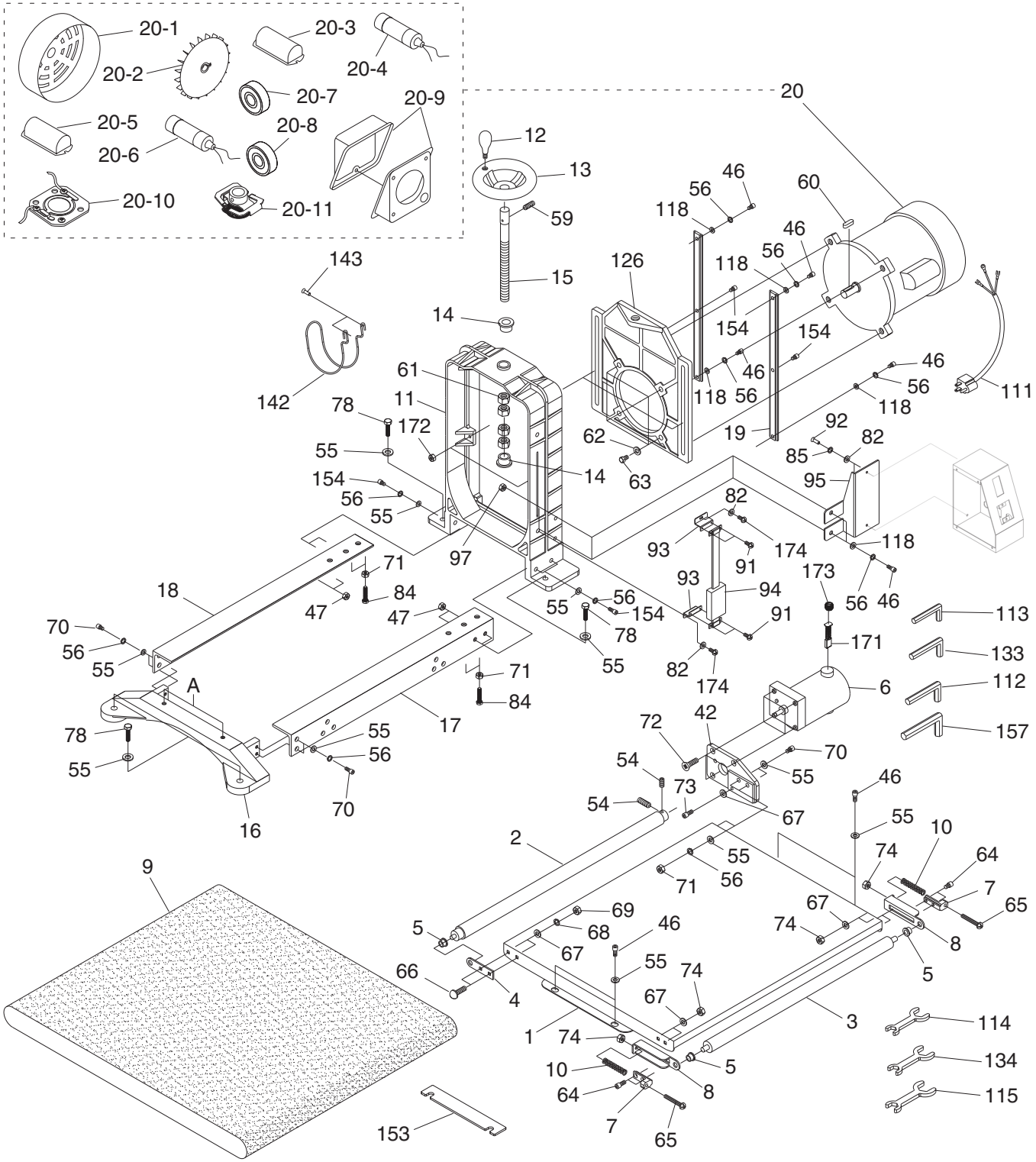

BUY PARTS ONLINE AT GRIZZLY.COM!
Scan QR code to visit our Parts Store.

Main Parts List

REF	PART #	DESCRIPTION
1	P0920001	SANDING BELT PLATEN
2	P0920002	OUTFEED ROLLER
3	P0920003	INFEED ROLLER
4	P0920004	FIXED ROLLER BRACKET
5	P0920005	BUSHING
6	P0920006	FEED MOTOR 1/3HP 230V 1-PH
7	P0920007	TENSION ADJUST BLOCK
8	P0920008	TENSION ROLLER BRACKET
9	P0920009	CONVEYOR BELT
10	P0920010	COMPRESSION SPRING 1.5 X 9.7 X 73
11	P0920011	ARCH BODY
12	P0920012	FIXED HANDLE 1-1/8 X 4, 3/8-16 X 1/2
13	P0920013	HANDWHEEL TYPE-19 7D X 11/16B-S X 3/6-16
14	P0920014	DRUM LIFT BUSHING
15	P0920015	DRUM LEADSCREW 5/8-18 X 8-1/4, 10-3/4
16	P0920016	TABLE GUIDE
17	P0920017	TABLE BRACKET (FRONT)
18	P0920018	TABLE BRACKET (REAR)
19	P0920019	GUIDE BAR
20	P0920020	DRUM MOTOR 2HP 230V 1-PH
20-1	P0920020-1	MOTOR FAN COVER
20-2	P0920020-2	MOTOR FAN
20-3	P0920020-3	S CAPACITOR COVER
20-4	P0920020-4	S CAPACITOR 400M 125V 1-3/4 X 3-1/2
20-5	P0920020-5	R CAPACITOR COVER
20-6	P0920020-6	R CAPACITOR 40M 250V 1-3/8 X 2-3/8
20-7	P0920020-7	BALL BEARING 6203ZZ (FRONT)
20-8	P0920020-8	BALL BEARING 6202ZZ (REAR)
20-9	P0920020-9	MOTOR JUNCTION BOX
20-10	P0920020-10	CONTACT PLATE 24MM
20-11	P0920020-11	CENTRIFUGAL SWITCH 9/16" 1720
42	P0920042	FEED MOTOR MOUNTING PLATE
46	P0920046	CAP SCREW M8-1.25 X 20
47	P0920047	LOCK NUT M8-1.25
54	P0920054	SET SCREW M6-1 X 6
55	P0920055	FLAT WASHER 8MM
56	P0920056	LOCK WASHER 8MM
59	P0920059	SET SCREW M8-1.25 X 8
60	P0920060	KEY 5 X 5 X 30 RE
61	P0920061	HEX NUT 5/8-18 THIN
62	P0920062	FLAT WASHER 9.5 X 23 X 2MM

REF	PART #	DESCRIPTION
63	P0920063	HEX BOLT M10.1.5 X 40
64	P0920064	CAP SCREW M6-1 X 15
65	P0920065	PHLP HD SCR M6-1 X 90
66	P0920066	CARRIAGE BOLT M6-1 X 20
67	P0920067	FLAT WASHER 6MM
68	P0920068	LOCK WASHER 6MM
69	P0920069	HEX NUT M6-1
70	P0920070	CAP SCREW M8-1.25 X 30
71	P0920071	HEX NUT M8-1.25
72	P0920072	FLAT HD SCR M5-.8 X 20
73	P0920073	CAP SCREW M5-.8 X 25
74	P0920074	LOCK NUT M6-1
78	P0920078	HEX BOLT M8-1.25 X 40
82	P0920082	FLAT WASHER 5MM
84	P0920084	HEX BOLT M8-1.25 X 30
85	P0920085	LOCK WASHER 5MM
91	P0920091	PHLP HD SCR M3-.5 X 6
92	P0920092	PHLP HD SCR M5-.8 X 10
93	P0920093	DEPTH GAUGE FIXED BRACKET
94	P0920094	DIGITAL INDICATOR
95	P0920095	SWITCH BOX MOUNTING BRACKET
97	P0920097	LOCK NUT M8-1.25
111	P0920111	MOTOR CORD 14G 3W 24" 6-15P
112	P0920112	HEX WRENCH 6MM
113	P0920113	HEX WRENCH 4MM
114	P0920114	WRENCH 10 X 12MM OPEN-ENDS
115	P0920115	WRENCH 14 X 17MM OPEN-ENDS
118	P0920118	FLAT WASHER 8MM
126	P0920126	MOTOR BRACKET
133	P0920133	HEX WRENCH 5MM
134	P0920134	WRENCH 12 X 14MM OPEN-ENDS
142	P0920142	DUST HOSE HOOK
143	P0920143	PHLP HD SCR M6-1 X 16
153	P0920153	CONVEYOR TABLE SHIM
154	P0920154	CAP SCREW M8-1.25 X 40
157	P0920157	HEX WRENCH 8MM
171	P0920171	CARBON BRUSHES (PAIR)
172	P0920172	LOCK NUT M8-1.25
173	P0920173	BRUSH CAP
174	P0920174	PHLP HD SCR M5-.8 X 8

BUY PARTS ONLINE AT GRIZZLY.COM!
Scan QR code to visit our Parts Store.

Drum

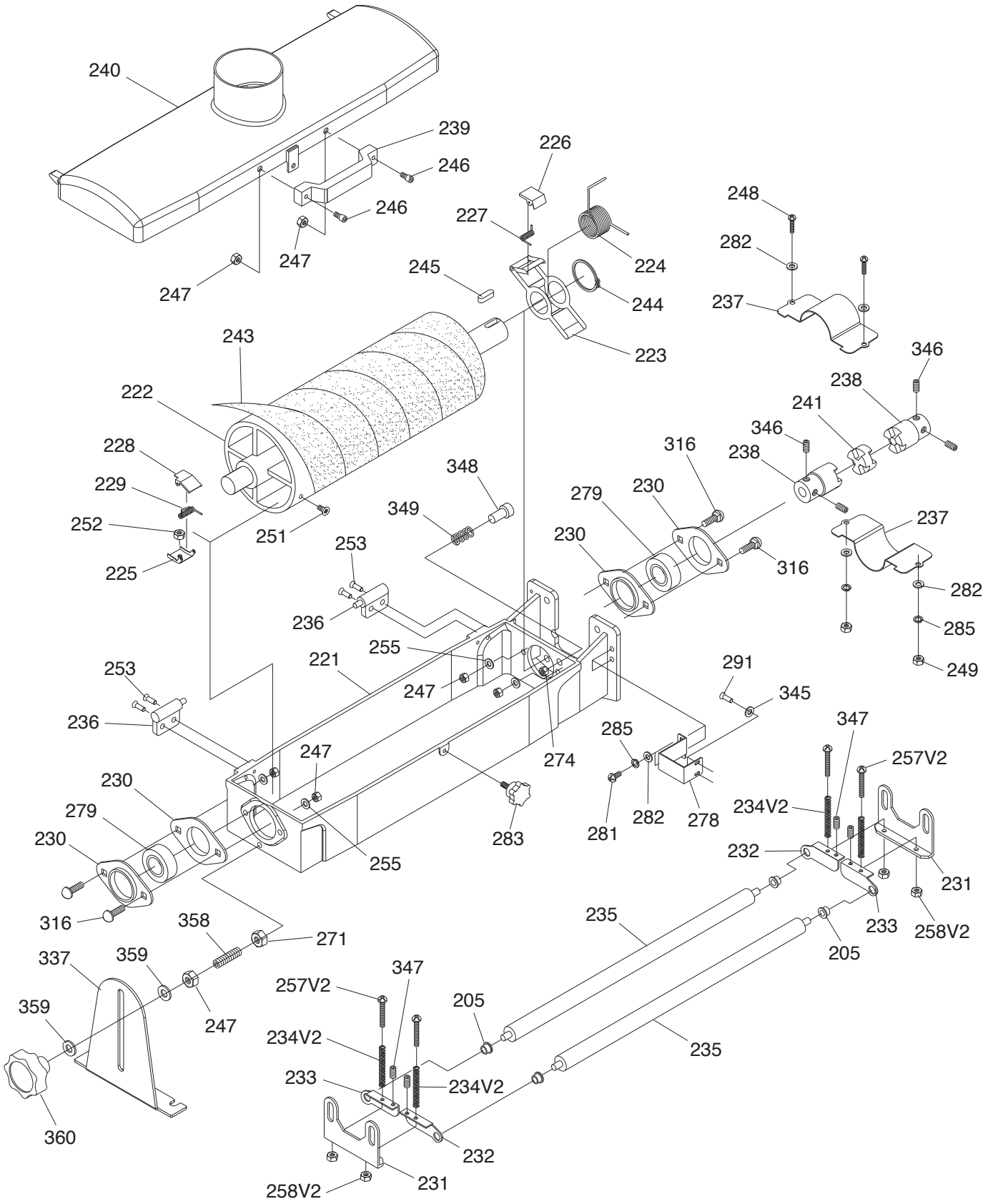

BUY PARTS ONLINE AT GRIZZLY.COM!
Scan QR code to visit our Parts Store.

Drum Parts List

REF	PART #	DESCRIPTION
205	P0920205	BUSHING
221	P0920221	DRUM CASE
222	P0920222	DRUM ROLLER
223	P0920223	PULL CLAMP BRACKET
224	P0920224	DRUM TORSION SPRING
225	P0920225	FIXED CLAMP BRACKET
226	P0920226	PULL CLAMP
227	P0920227	PULL CLAMP TORSION SPRING
228	P0920228	FIXED CLAMP
229	P0920229	FIXED CLAMP TORSION SPRING
230	P0920230	BEARING CAP
231	P0920231	PRESSURE ROLLER BRACKET
232	P0920232	ROLLER MOUNT (RIGHT)
233	P0920233	ROLLER MOUNT (LEFT)
234V2	P0920234V2	COMP SPRING 1.4 X 8 X 40.25 V2.09.23
235	P0920235	PRESSURE ROLLER
236	P0920236	DRUM DOOR HINGE
237	P0920237	DRUM SHAFT JOINT COVER
238	P0920238	JAW CLUTCH COUPLER
239	P0920239	DRUM DOOR HANDLE
240	P0920240	DRUM DOOR
241	P0920241	JAW CLUTCH BLOCK
243	P0920243	SANDING ROLL 3" X 22' 100-GRIT
244	P0920244	EXT RETAINING RING 28MM
245	P0920245	KEX 5 X 5 X 20 RE
246	P0920246	CAP SCREW M8-1.25 X 20
247	P0920247	LOCK NUT M8-1.25

REF	PART #	DESCRIPTION
248	P0920248	PHLP HD SCR M5-.8 X 20
249	P0920249	HEX NUT M5-.8
251	P0920251	FLAT HD SCR 10-24 X 3/8
252	P0920252	HEX NUT M4-.7
253	P0920253	FLAT HD SCR M6-1 X 25
255	P0920255	FLAT WASHER 8MM
257V2	P0920257V2	PHLP HD SCR M5-.8 X 50 V2.09.23
258V2	P0920258V2	LOCK NUT M5-.8 V2.09.23
271	P0920271	HEX NUT M8-1.25
274	P0920274	LOCK NUT M6-1
278	P0920278	DEPTH GAUGE ARCH BRACKET
279	P0920279	BALL BEARING 6205-2RS
281	P0920281	PHLP HD SCR M5-.8 X 8
282	P0920282	FLAT WASHER 5MM
283	P0920283	KNOB BOLT M6-1 X 10
285	P0920285	LOCK WASHER 5MM
291	P0920291	PHLP HD SCR M3-.5 X 6
316	P0920316	CARRIAGE BOLT M8-1.25 X 30
337	P0920337	DRUM LIFT ADJUSTMENT PLATE
345	P0920345	FLAT WASHER 4.3 X 10 X 1MM
346	P0920346	SET SCREW 1/4-20 X 5/16
347	P0920347	SET SCREW 10-24 X 5/8
348	P0920348	CAP SCREW M6-1 X 50
349	P0920349	COMPRESSION SPRING 0.7 X 8 X 35
358	P0920358	SET SCREW M8-1.25 X 45
359	P0920359	FLAT WASHER 8MM
360	P0920360	KNOB M8-1.25, 7-LOBE, D60

BUY PARTS ONLINE AT GRIZZLY.COM!
Scan QR code to visit our Parts Store.

Cabinet

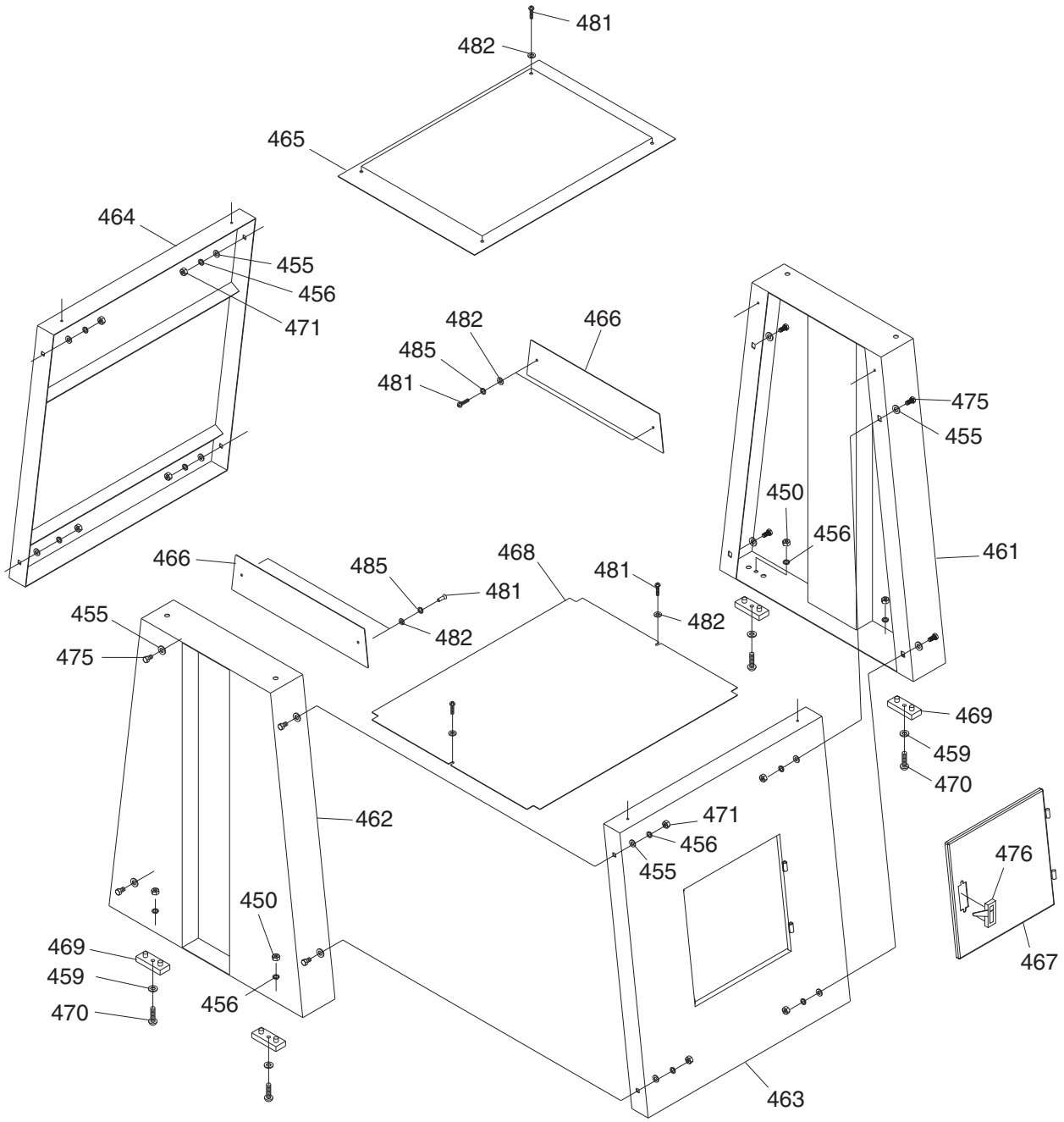

REF	PART #	DESCRIPTION
450	P0920450	HEX NUT 5/16-18
455	P0920455	FLAT WASHER 8MM
456	P0920456	LOCK WASHER 8MM
459	P0920459	FLAT WASHER 5/16
461	P0920461	RIGHT SIDE PANEL
462	P0920462	LEFT SIDE PANEL
463	P0920463	FRONT PANEL
464	P0920464	REAR PANEL
465	P0920465	UPPER PANEL
466	P0920466	PARTITION PANEL

REF	PART #	DESCRIPTION
467	P0920467	CABINET DOOR
468	P0920468	BOTTOM PANEL
469	P0920469	RUBBER FOOT
470	P0920470	PHLP HD SCR 5/16-18 X 3/4
471	P0920471	HEX NUT M8-1.25
475	P0920475	HEX BOLT M8-1.25 X 25
476	P0920476	CABINET DOOR LATCH HANDLE
481	P0920481	PHLP HD SCR M5-.8 X 8
482	P0920482	FLAT WASHER 5MM
485	P0920485	LOCK WASHER 5MM

BUY PARTS ONLINE AT GRIZZLY.COM!
Scan QR code to visit our Parts Store.

Extension Tables

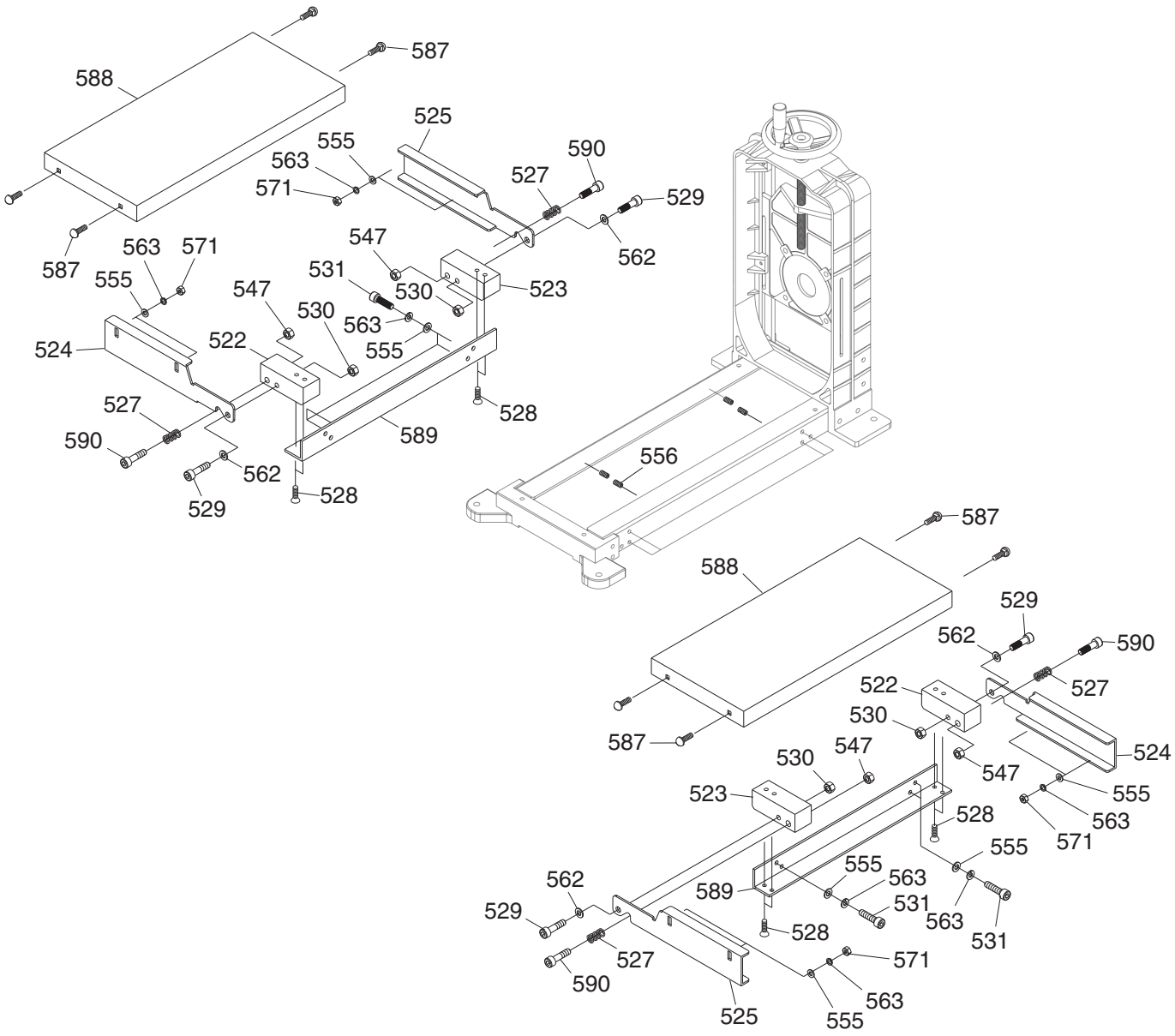

REF	PART #	DESCRIPTION
522	P0920522	TABLE BLOCK (RIGHT)
523	P0920523	TABLE BLOCK (LEFT)
524	P0920524	TABLE FOLDING BRACKET (RIGHT)
525	P0920525	TABLE FOLDING BRACKET (LEFT)
527	P0920527	COMPRESSION SPRING 1 X 10 X 21
528	P0920528	FLAT HD SCR M8-1.25 X 25
529	P0920529	SHOULDER SCREW M10-1.5 X 30, 10 X 35
530	P0920530	LOCK NUT M10-1.5
531	P0920531	CAP SCREW M8-1.25 X 16
547	P0920547	LOCK NUT M8-1.25

REF	PART #	DESCRIPTION
555	P0920555	FLAT WASHER 8MM
556	P0920556	SET SCREW M8-1.25 X 8
562	P0920562	FLAT WASHER 10MM
563	P0920563	LOCK WASHER 8MM
571	P0920571	HEX NUT M8-1.25
587	P0920587	CARRIAGE BOLT M8-1.25 X 20
588	P0920588	EXTENSION TABLE
589	P0920589	TABLE MOUNTING BRACKET
590	P0920590	SHOULDER SCREW M8-1.25 X 33, 8 X 22

BUY PARTS ONLINE AT GRIZZLY.COM!
Scan QR code to visit our Parts Store.

Control Panel

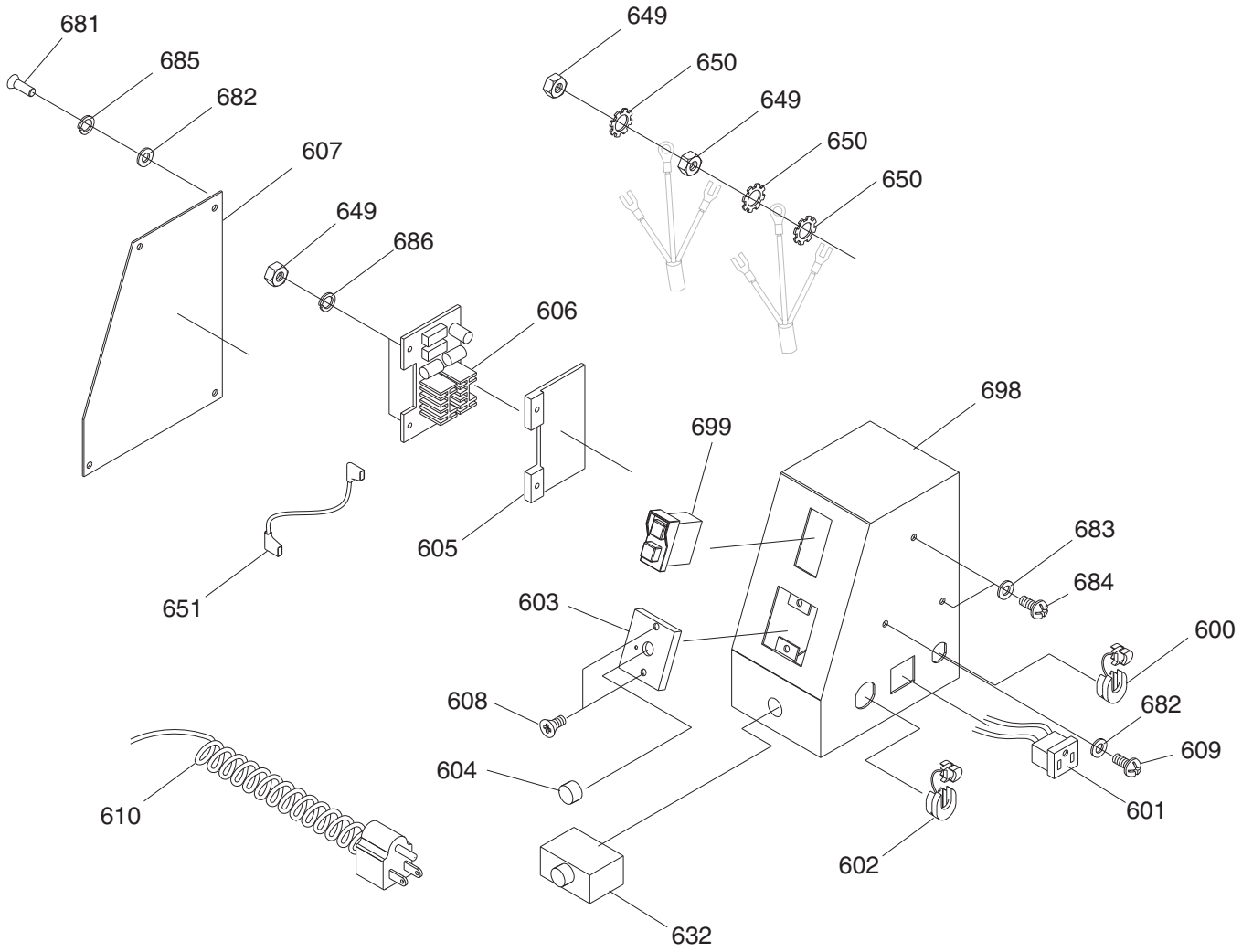

REF	PART #	DESCRIPTION
600	P0920600	STRAIN RELIEF TYPE-1 7/8"
601	P0920601	ELECTRICAL OUTLET 15A 250V
602	P0920602	STRAIN RELIEF TYPE-1 5/8"
603	P0920603	RESISTANCE PLATE
604	P0920604	CONVEYOR SPEED DIAL KNOB
605	P0920605	INSULATION BOARD
606	P0920606	POTENTIOMETER/CIRCUIT BOARD AMP-326B
607	P0920607	SWITCH BOX COVER
608	P0920608	FLAT HD SCR M5-.8 X 10
609	P0920609	PHLP HD SCR M5-.8 X 20
610	P0920610	POWER CORD 14G 3W 60" 6-15P
632	P0920632	CIRCUIT BREAKER KUOYOH 88 SERIES 9A

REF	PART #	DESCRIPTION
649	P0920649	HEX NUT M4-.7
650	P0920650	EXT TOOTH WASHER 5MM
651	P0920651	CIRCUIT BOARD CORD 14G 1W 5"
681	P0920681	PHLP HD SCR M5-.8 X 8
682	P0920682	FLAT WASHER 5MM
683	P0920683	FLAT WASHER 4MM
684	P0920684	PHLP HD SCR M4-.7 X 20
685	P0920685	LOCK WASHER 5MM
686	P0920686	LOCK WASHER 4MM
698	P0920698	SWITCH BOX
699	P0920699	ON/OFF SWITCH WKJD-17B

BUY PARTS ONLINE AT GRIZZLY.COM!
Scan QR code to visit our Parts Store.

Labels & Cosmetics

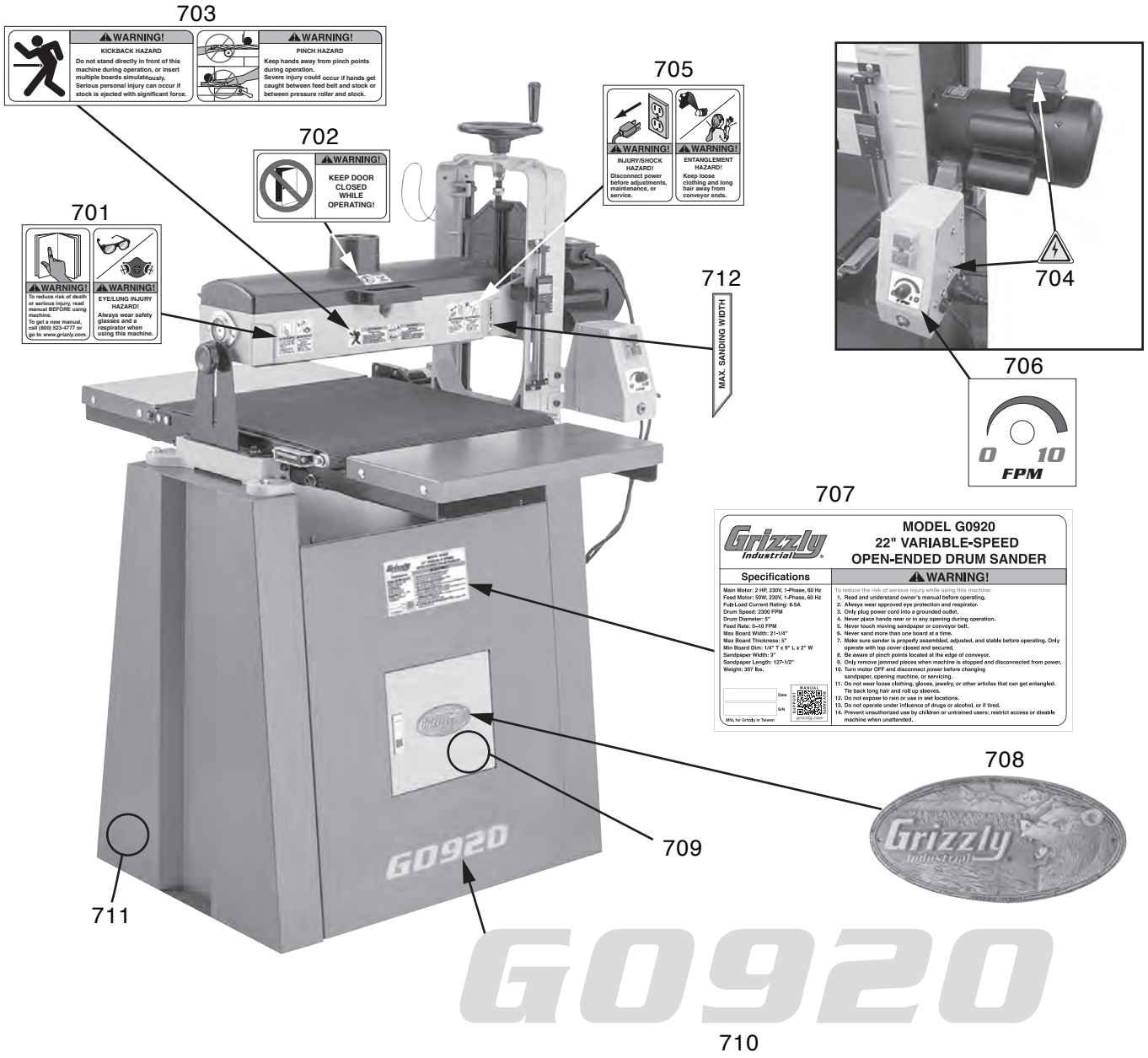

REF	PART #	DESCRIPTION
701	P0920701	READ MANUAL/PPE LABEL
702	P0920702	KEEP DOOR CLOSED LABEL
703	P0920703	KICKBACK/PINCH HAZARD LABEL
704	P0920704	ELECTRICITY LABEL
705	P0920705	SHOCK/ENTANGLEMENT HAZARD LABEL
706	P0920706	FPM LABEL

REF	PART #	DESCRIPTION
707	P0920707	MACHINE ID LABEL
708	P0920708	GRIZZLY NAMEPLATE
709	P0920709	TOUCH-UP PAINT, GRIZZLY BEIGE
710	P0920710	MODEL NUMBER LABEL
711	P0920711	TOUCH-UP PAINT, GRIZZLY GREEN
712	P0920712	MAX SANDING WIDTH LABEL

⚠WARNING

Safety labels help reduce the risk of serious injury caused by machine hazards. If any label comes off or becomes unreadable, the owner of this machine MUST replace it in the original location before resuming operations. For replacements, contact (800) 523-4777 or www.grizzly.com.

BUY PARTS ONLINE AT GRIZZLY.COM!
Scan QR code to visit our Parts Store.

WARRANTY & RETURNS

Grizzly Industrial, Inc. warrants every product it sells for a period of **1 year** to the original purchaser from the date of purchase. This warranty does not apply to defects due directly or indirectly to misuse, abuse, negligence, accidents, repairs or alterations or lack of maintenance. This is Grizzly's sole written warranty and any and all warranties that may be implied by law, including any merchantability or fitness, for any particular purpose, are hereby limited to the duration of this written warranty. We do not warrant or represent that the merchandise complies with the provisions of any law or acts unless the manufacturer so warrants. In no event shall Grizzly's liability under this warranty exceed the purchase price paid for the product and any legal actions brought against Grizzly shall be tried in the State of Washington, County of Whatcom.

We shall in no event be liable for death, injuries to persons or property or for incidental, contingent, special, or consequential damages arising from the use of our products.

The manufacturers reserve the right to change specifications at any time because they constantly strive to achieve better quality equipment. We make every effort to ensure that our products meet high quality and durability standards and we hope you never need to use this warranty.

In the event you need to use this warranty, contact us by mail or phone and give us all the details. We will then issue you a "Return Number," which must be clearly posted on the outside as well as the inside of the carton. We will not accept any item back without this number. Proof of purchase must accompany the merchandise.

Please feel free to write or call us if you have any questions about the machine or the manual.

Thank you again for your business and continued support. We hope to serve you again soon.

For further information about the warranty, visit **https://www.grizzly.com/forms/warranty** or scan the QR code below to be automatically directed to our warranty page.

WARRANTY

grizzly.com

grizzly.com®

TOOL WEBSITE

Buy Direct and Save with Grizzly® – Trusted, Proven and a Great Value!

~Since 1983~

Visit Our Website Today For Current Specials!

ORDER

24 HOURS A DAY!

1-800-523-4777

