SECTION 10: PARTS

We do our best to stock replacement parts when possible, but we cannot guarantee that all parts shown are available for purchase. Call **(800) 523-4777** or visit **www.grizzly.com/parts** to check for availability.

Body

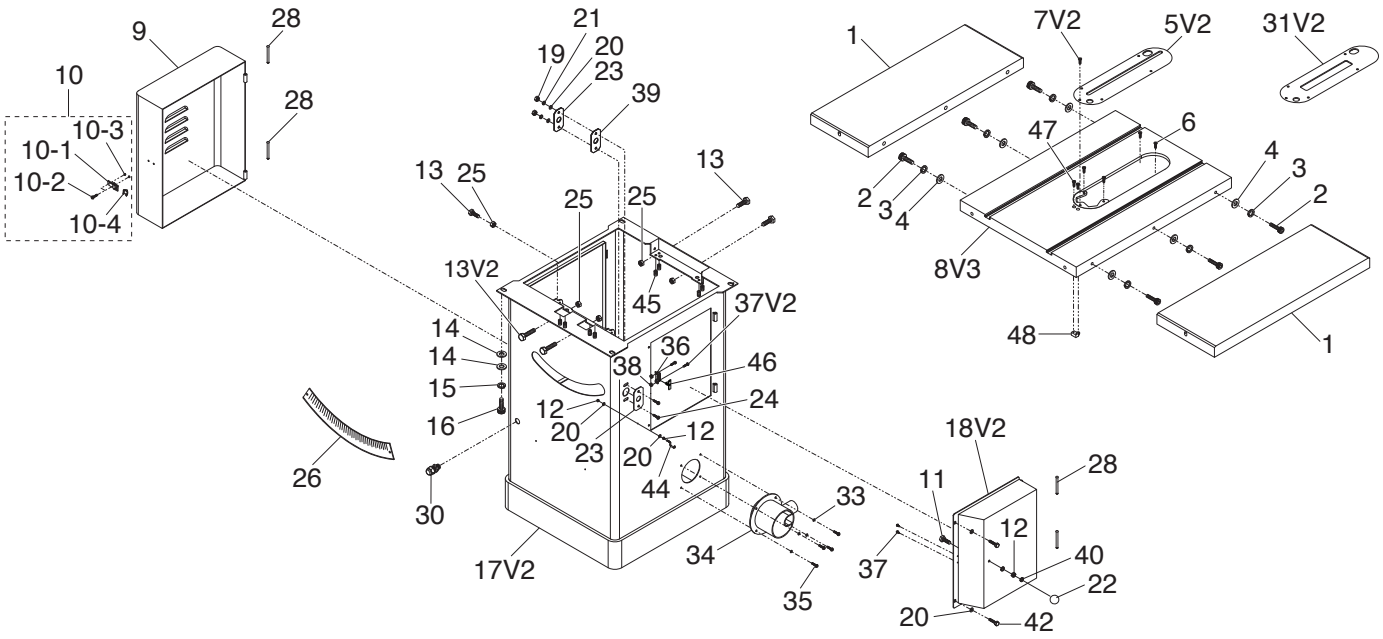

REF	PART #	DESCRIPTION
1	P0899001	EXTENSION WING
2	P0899002	CAP SCREW M10-1.5 X 30
3	P0899003	LOCK WASHER 10MM
4	P0899004	FLAT WASHER 10MM
5V2	P0899005V2	TABLE INSERT (STANDARD) V2.02.26
6	P0899006	FLAT HD CAP SCR M5-.8 X 10
7V2	P0899007V2	FLAT HD CAP SCR M5-.8 X 15 V2.02.26
8V3	P0899008V3	MAIN TABLE V3.02.26
9	P0899009	MOTOR ACCESS DOOR
10-1	P0899010-1	DRAW LATCH STRIKE
10-2	P0899010-2	PHLP HD SCR 8-32 X 3/8
10-3	P0899010-3	HEX NUT 8-32
10-4	P0899010-4	DRAW LATCH HOOK
11	P0899011	HEX BOLT 1/4-20 X 3/4
12	P0899012	HEX NUT 1/4-20
13	P0899013	HEX BOLT M8-1.25 X 25
13V2	P0899013V2	HEX BOLT M8-1.25 X 45 V2.10.20
14	P0899014	FLAT WASHER 8MM
15	P0899015	LOCK WASHER 8MM
16	P0899016	CAP SCREW M8-1.25 X 25
17V2	P0899017V2	CABINET V2.10.20
18V2	P0899018V2	CABINET ACCESS DOOR V2.10.20
19	P0899019	HEX NUT M5-.8
20	P0899020	FLAT WASHER 5MM
21	P0899021	LOCK WASHER 5MM

REF	PART #	DESCRIPTION
22	P0899022	KNOB 1/4-20, D1-1/16, BALL
23	P0899023	LEADSCREW BRACKET 18MM ID
24	P0899024	BUTTON HD CAP SCR M5-.8 X 20
25	P0899025	LOCK NUT M8-1.25
26	P0899026	TILT SCALE
28	P0899028	HINGE PIN
30	P0899030	STRAIN RELIEF TYPE-3 M16-1.5
31V2	P0899031V2	TABLE INSERT (DADO) V2.02.26
33	P0899033	FLAT WASHER 6MM
34	P0899034	DUST PORT 4" X 1-1/2"
35	P0899035	BUTTON HD CAP SCR M5-.8 X 12
36	P0899036	GRAB CATCH
37	P0899037	TAP SCREW #5 X 1/4
37V2	P0899037V2	PHLP HD SCR #5-40 X 1/4 V2.10.20
38	P0899038	HEX NUT 5-40
39	P0899039	LEADSCREW BRACKET 23MM ID
40	P0899040	LOCK WASHER 1/4
41	P0899041	SET SCREW M5-.8 X 10
42	P0899042	HEX BOLT M5-.8 X 10
44	P0899044	PUSH LOCK BRACKET
45	P0899045	SET SCREW M6-1 X 10
46	P0899046	STRIKE LATCH
47	P0899047	FLAT HD SCR 10-24 X 3/4
48	P0899048	INSERT MOUNTING BRACKET

BUY PARTS ONLINE AT GRIZZLY.COM!
Scan QR code to visit our Parts Store.

Trunnion

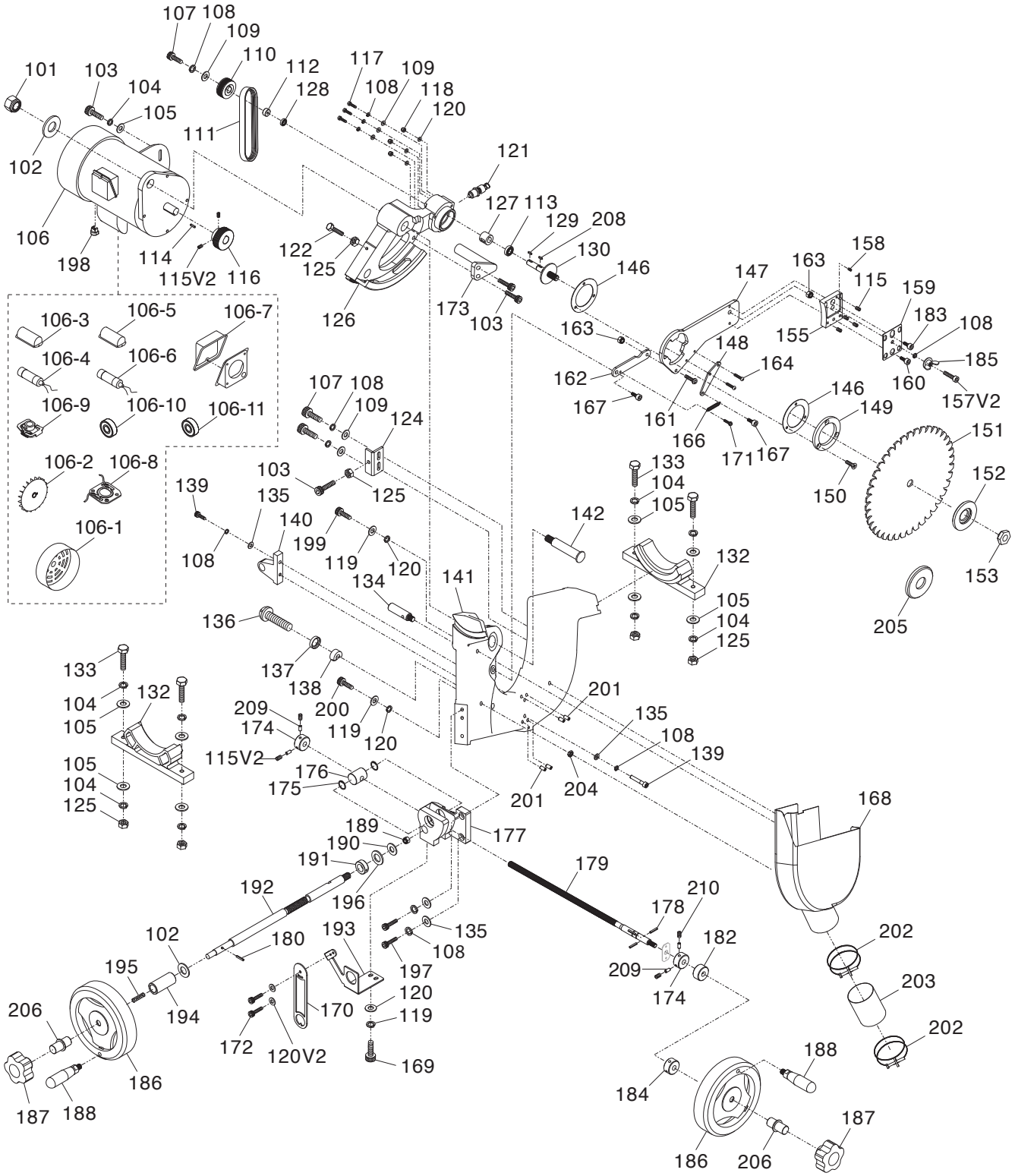

BUY PARTS ONLINE AT GRIZZLY.COM!
Scan QR code to visit our Parts Store.

Trunnion Parts List

REF	PART #	DESCRIPTION
101	P0899101	LOCK NUT M16-2
102	P0899102	FLAT WASHER 5/8
103	P0899103	CAP SCREW M8-1.25 X 20
104	P0899104	LOCK WASHER 8MM
105	P0899105	FLAT WASHER 8MM
106	P0899106	MOTOR 2HP 110/220V 1-PH
106-1	P0899106-1	MOTOR FAN COVER
106-2	P0899106-2	MOTOR FAN
106-3	P0899106-3	START CAPACITOR COVER
106-4	P0899106-4	S CAPACITOR 200M 125V 1-1/2 X 2-3/4
106-5	P0899106-5	RUN CAPACITOR COVER
106-6	P0899106-6	R CAPACITOR 30M 350V 1-1/2 X 2-3/8
106-7	P0899106-7	MOTOR JUNCTION BOX
106-8	P0899106-8	CONTACT PLATE 63 X 63MM
106-9	P0899106-9	CENTRIFUGAL SWITCH M14-2
106-10	P0899106-10	BALL BEARING 6204ZZ (FRONT)
106-11	P0899106-11	BALL BEARING 6202ZZ (REAR)
107	P0899107	CAP SCREW M6-1 X 16
108	P0899108	LOCK WASHER 6MM
109	P0899109	FLAT WASHER 6MM
110	P0899110	ARBOR PULLEY
111	P0899111	POLY V-BELT 150PJ6
112	P0899112	BUSHING
113	P0899113	BALL BEARING 6203-2RS
114	P0899114	KEY 6 X 6 X 20
115	P0899115	SET SCREW M6-1 X 10
115V2	P0899115V2	SET SCREW M6-1 X 6 V2.10.20
116	P0899116	MOTOR PULLEY
117	P0899117	HEX BOLT M6-1 X 12
118	P0899118	LOCK NUT M5-.8
119	P0899119	LOCK WASHER 5MM
120	P0899120	FLAT WASHER 5MM
120V2	P0899120V2	FLAT WASHER 4MM V2.10.20
121	P0899121	ARBOR LOCK
122	P0899122	HEX BOLT M8-1.25 X 40
124	P0899124	BLADE HEIGHT LIMIT BLOCK
125	P0899125	HEX NUT M8-1.25
126	P0899126	MOTOR MOUNT
127	P0899127	ARBOR BUSHING
128	P0899128	BALL BEARING 6202-2RS
129	P0899129	KEY 5 X 5 X 15
130	P0899130	ARBOR
132	P0899132	TRUNNION
133	P0899133	HEX BOLT M8-1.25 X 45
134	P0899134	LIMIT BLOCK
135	P0899135	FLAT WASHER 6MM
136	P0899136	FLAT HD CAP SCR M10-1.5 X 45
137	P0899137	SPACER 16.5 X 24.5 X 5.5MM
138	P0899138	SPACER 10 X 33 X 11MM (NYLON)
139	P0899139	CAP SCREW M6-1 X 35
140	P0899140	SHAFT BRACKET
141	P0899141	MAIN TRUNNION
142	P0899142	MOTOR SHAFT M16-2 X 120
146	P0899146	GASKET
147	P0899147	SPREADER BRACKET
148	P0899148	SPRING BRACKET
149	P0899149	FLANGE RING

REF	PART #	DESCRIPTION
150	P0899150	FLAT HD CAP SCR M5-.8 X 50
151	P0899151	SAW BLADE 10" X 40T
152	P0899152	ARBOR FLANGE
153	P0899153	ARBOR NUT 5/8-12
155	P0899155	SPREADER ADJUSTMENT BLOCK
157V2	P0899157V2	CAP SCREW M6-1 X 30 V2.06.20
158	P0899158	SET SCREW M8-1.25 X 12 BALL-PT
159	P0899159	SPREADER CLAMPING PLATE
160	P0899160	CAP SCREW M6-1 X 25
161	P0899161	BUTTON HD CAP SCR M6-1 X 20
162	P0899162	CONNECTING PLATE
163	P0899163	LOCK NUT M6-1
164	P0899164	BUTTON HD CAP SCR M5-.8 X 16
166	P0899166	EXTENSION SPRING 1 X 7.2 X 68MM
167	P0899167	SHOULDER SCREW M6-1 X 15, 8 X 5
168	P0899168	DUST COLLECTION CASE
169	P0899169	CAP SCREW M5-.8 X 12
170	P0899170	POINTER
171	P0899171	BUTTON HD CAP SCR M5-.8 X 12
172	P0899172	BUTTON HD CAP SCR M4-.7 X 8
173	P0899173	MOTOR LOCATING SHAFT
174	P0899174	STOP COLLAR
175	P0899175	INT RETAINING RING 24MM
176	P0899176	TILT LEADSCREW NUT
177	P0899177	TILT LEADSCREW BASE
178	P0899178	ROLL PIN 4 X 16
179	P0899179	TILT LEADSCREW
180	P0899180	ROLL PIN 4 X 20
182	P0899182	BEARING WASHER 22 X 12 X 10MM
183	P0899183	CAP SCREW M6-1 X 16
184	P0899184	BEVELED BUSHING
185	P0899185	WING NUT M6-1
186	P0899186	HANDWHEEL TYPE-7 160D X 12B-N X M10-1.5
187	P0899187	KNOB M8-1.25, D60, 6-LOBE
188	P0899188	REVOLVING HANDLE 21 X 90, M10-1.5 X 12
189	P0899189	LOCK NUT M12-1.75
190	P0899190	FLAT WASHER 12MM
191	P0899191	COLLAR
192	P0899192	ELEVATION SHAFT
193	P0899193	POINTER BASE
194	P0899194	HANDWHEEL BUSHING
195	P0899195	COMPRESSION SPRING 1.2 X 15 X 36MM
196	P0899196	ELEVATION SHAFT SPACER 17 X 30 X 1MM
197	P0899197	CAP SCREW M6-1 X 20
198	P0899198	STRAIN RELIEF TYPE-3 M16-1.5
199	P0899199	CAP SCREW M5-.8 X 30
200	P0899200	CAP SCREW M5-.8 X 20
201	P0899201	SET SCREW M6-1 X 20
202	P0899202	HOSE CLAMP 3-1/4"
203	P0899203	CLEAR HOSE 3" X 26"
204	P0899204	HEX NUT M10-1.5
205	P0899205	ARBOR FLANGE (DADO)
206	P0899206	KNOB BUSHING
208	P0899208	KEY 5 X 5 X 10
209	P0899209	SPACER 4 X 2MM
210	P0899210	SET SCREW M6-1 X 6

BUY PARTS ONLINE AT GRIZZLY.COM!
Scan QR code to visit our Parts Store.

Power Switch

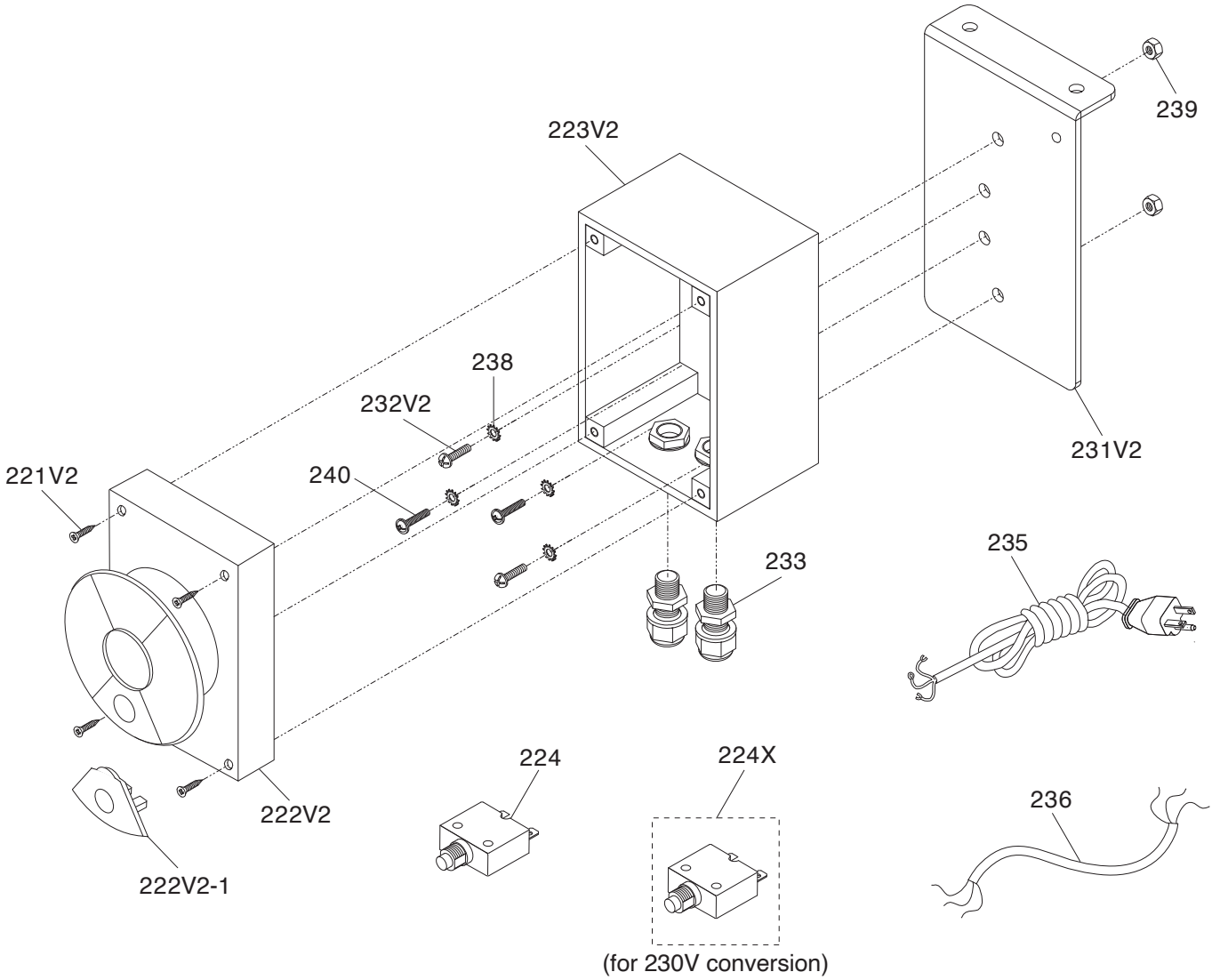

REF	PART #	DESCRIPTION
221V2	P0899221V2	TAP SCREW M3 X 20 V2.06.20
222V2	P0899222V2	PADDLE SWITCH UV03-006 V2.06.20
222V2-1	P0899222V2-1	LOCKOUT PIN (YELLOW)
223V2	P0899223V2	SWITCH BOX AP-9501B-205 JP950B V2.06.20
224	P0899224	CIRCUIT BREAKER 20A
224X	P0899224X	CIRCUIT BREAKER 10A
231V2	P0899231V2	SWITCH BRACKET V2.06.20

REF	PART #	DESCRIPTION
232V2	P0899232V2	PHLP HD SCR M5-.8 X 10 V2.06.20
233	P0899233	STRAIN RELIEF TYPE-3 PG11
235	P0899235	POWER CORD 14G 3W 72" 5-20P
236	P0899236	MOTOR CORD 14G 3W 32"
238	P0899238	EXT TOOTH WASHER 5MM
239	P0899239	HEX NUT M5-.8
240	P0899240	FLANGE SCREW M5-.8 X 10

BUY PARTS ONLINE AT GRIZZLY.COM!
Scan QR code to visit our Parts Store.

Blade Guard

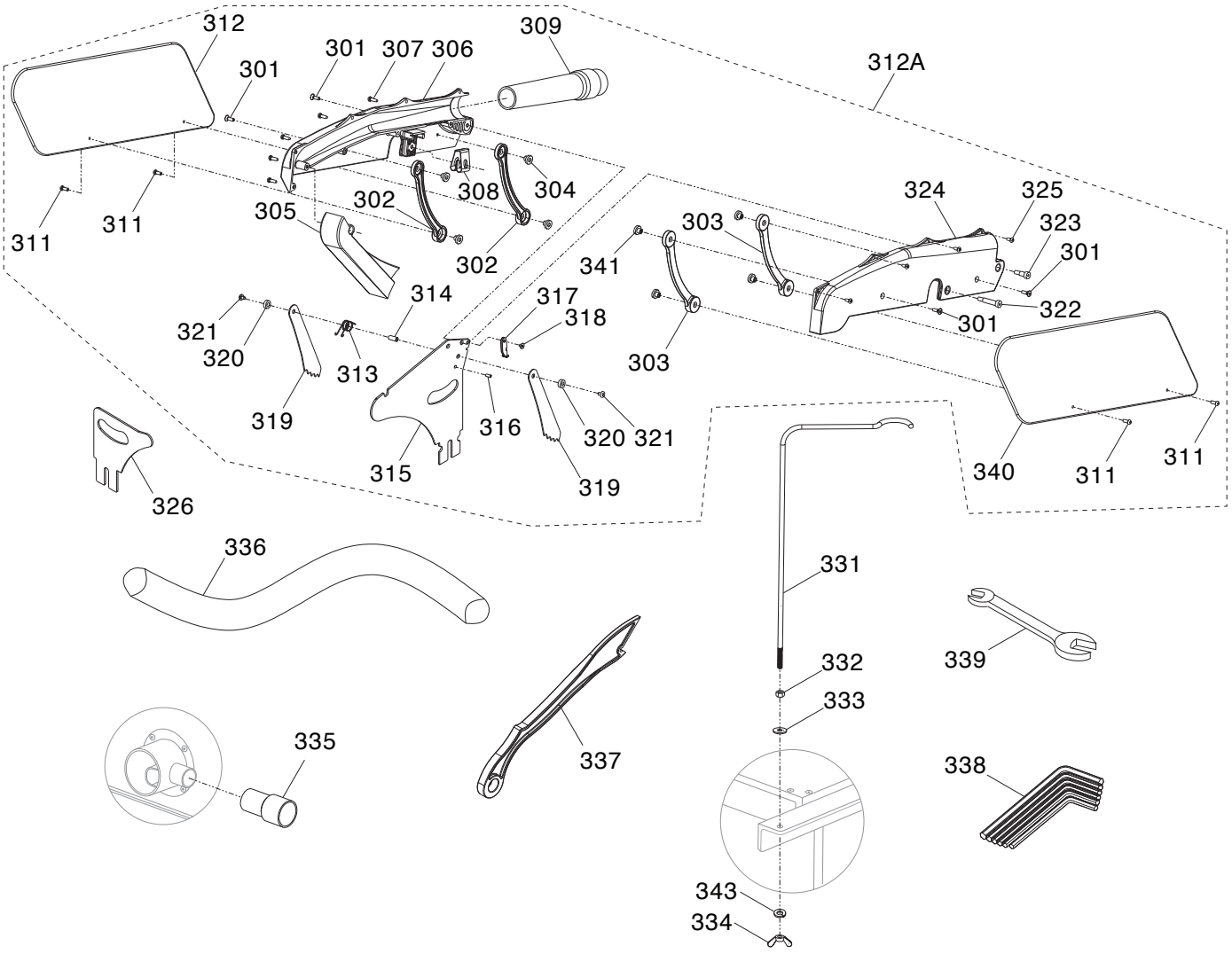

REF	PART #	DESCRIPTION
301	P0899301	FLAT HD CAP SCR M5-.8 X 10
302	P0899302	GUARD SUPPORT (LEFT)
303	P0899303	GUARD SUPPORT (RIGHT)
304	P0899304	FLANGE NUT M5-.8 X 9
305	P0899305	DUST CHUTE
306	P0899306	GUARD (LEFT)
307	P0899307	TAP SCREW M3.5 X 16
308	P0899308	SPRING CLAMP
309	P0899309	BLADE GUARD DUST PORT
311	P0899311	BUTTON HD CAP SCR M5-.8 X 10
312	P0899312	SIDE GUARD (LEFT)
312A	P0899312A	COMPLETE BLADE GUARD ASSY
313	P0899313	TORSION SPRING
314	P0899314	PAWL SHAFT
315	P0899315	SPREADER
316	P0899316	ROLL PIN 4 X 16
317	P0899317	PAWL RELEASE HOOK
318	P0899318	RIVET 4 X 6
319	P0899319	ANTI-KICKBACK PAWL

REF	PART #	DESCRIPTION
320	P0899320	SPACER 6 X 10 X 4MM
321	P0899321	BUTTON HD CAP SCR M4-.7 X 5
322	P0899322	SHOULDER SCREW M5-.8 X 10, 6 X 25
323	P0899323	SHOULDER SCREW M5-.8 X 10, 6 X 10
324	P0899324	GUARD (RIGHT)
325	P0899325	TAP SCREW M3 X 10
326	P0899326	RIVING KNIFE
331	P0899331	HOSE SUPPORT ARM
332	P0899332	HEX NUT M6-1
333	P0899333	FLAT WASHER 6MM
334	P0899334	WING NUT M6-1
335	P0899335	HOSE CONNECTOR 1-1/2"
336	P0899336	DUST HOSE 1-1/2" X 94"
337	P0899337	PUSH STICK
338	P0899338	HEX WRENCH SET 2.5-8MM 6-PC
339	P0899339	WRENCH 13 X 27MM OPEN-ENDS
340	P0899340	SIDE GUARD (RIGHT)
341	P0899341	FLANGE NUT M5-.8 X 6
343	P0899343	LOCK WASHER 6MM

BUY PARTS ONLINE AT GRIZZLY.COM!
Scan QR code to visit our Parts Store.

Miter Gauge

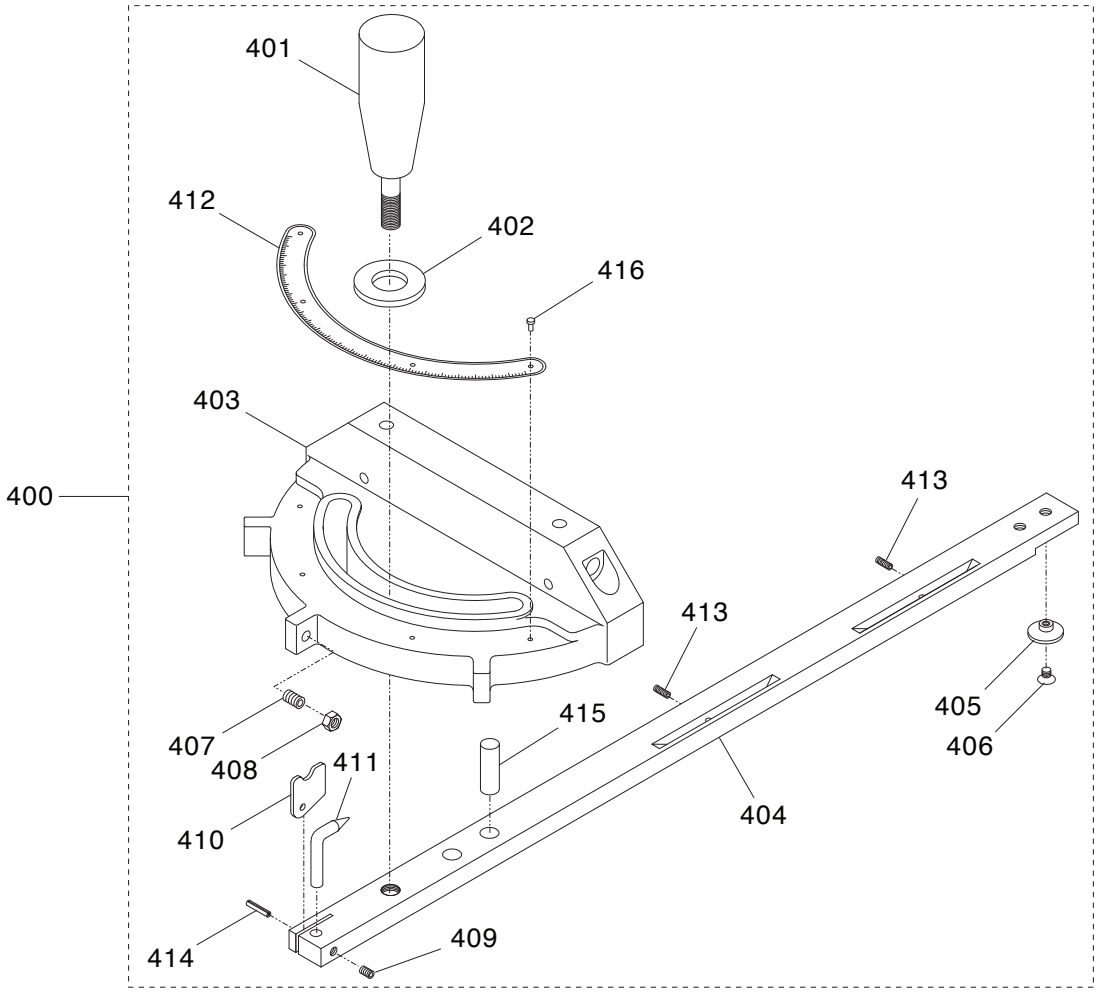

REF	PART #	DESCRIPTION
400	P0899400	MITER GAUGE ASSEMBLY
401	P0899401	MITER HANDLE 5/16-18 X 1
402	P0899402	FLAT WASHER 5/16
403	P0899403	MITER GAUGE BODY
404	P0899404	MITER BAR
405	P0899405	MITER BAR GUIDE WASHER
406	P0899406	FLAT HD SCR 1/4-20 X 5/16
407	P0899407	SET SCREW 10-24 X 3/4
408	P0899408	HEX NUT 10-24

REF	PART #	DESCRIPTION
409	P0899409	SET SCREW 10-24 X 1/4
410	P0899410	STOP LINK
411	P0899411	POINTER
412	P0899412	SCALE
413	P0899413	SET SCREW 10-24 X 3/8
414	P0899414	ROLL PIN 3 X 6
415	P0899415	MITER HINGE PIN
416	P0899416	RIVET 2 X 5

BUY PARTS ONLINE AT GRIZZLY.COM!
Scan QR code to visit our Parts Store.

Fence

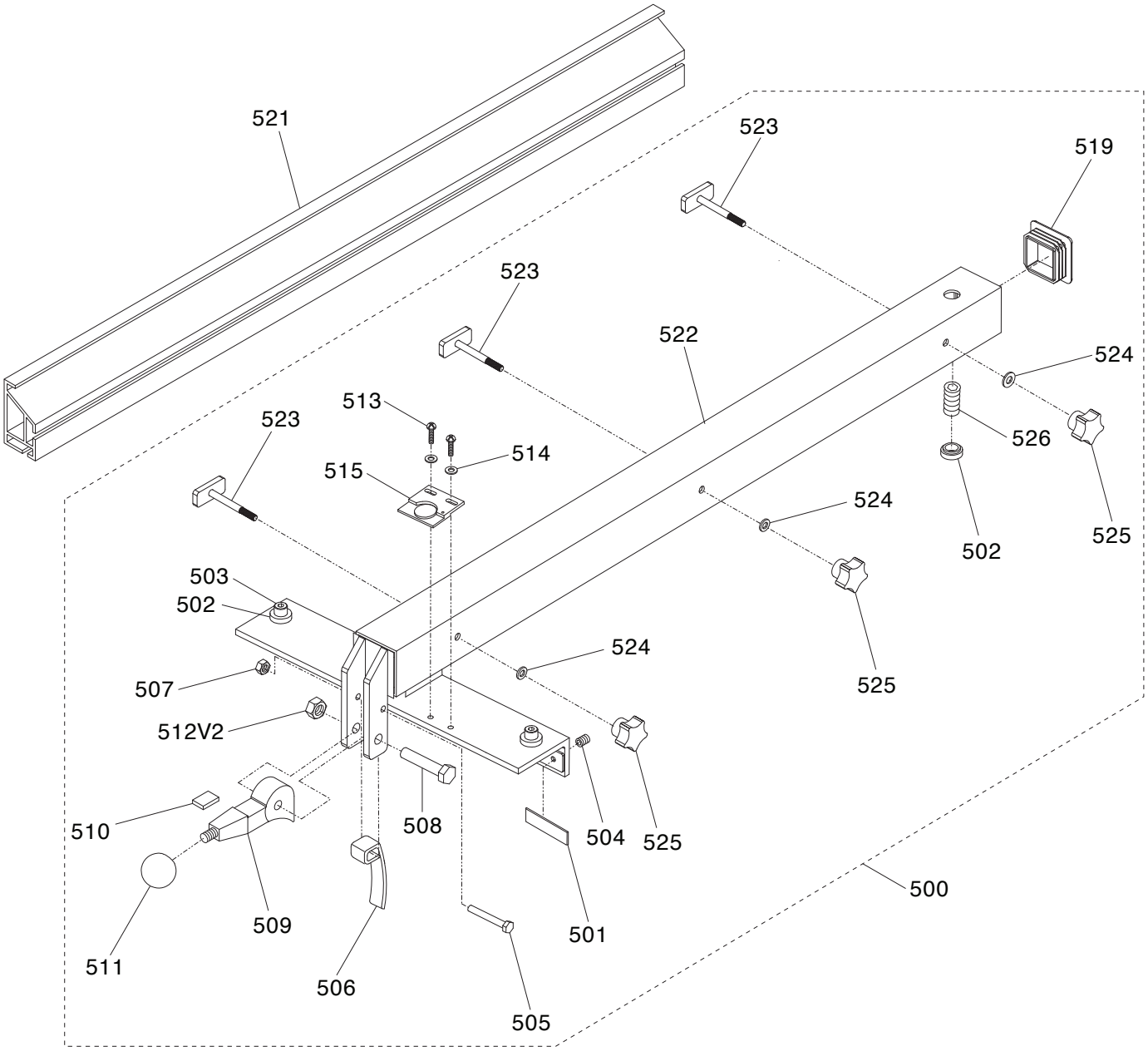

REF	PART #	DESCRIPTION
500	P0899500	FENCE ASSEMBLY
501	P0899501	GLIDE PAD
502	P0899502	KNURLED NUT M12-1.75
503	P0899503	SET SCREW M12-1.75 X 20 NYLON-TIPPED
504	P0899504	SET SCREW 3/8-16 X 5/16
505	P0899505	HEX BOLT 1/4-20 X 1-3/4
506	P0899506	CAM LOCK PLATE
507	P0899507	LOCK NUT 1/4-20
508	P0899508	HEX BOLT 3/8-16 X 1-3/4
509	P0899509	FENCE LOCK CAM LEVER
510	P0899510	MAGNET
511	P0899511	KNOB 3/8-16, D1-9/16, BALL

REF	PART #	DESCRIPTION
512V2	P0899512V2	LOCK NUT 3/8-16 V2.10.20
513	P0899513	PHLP HD SCR 10-24 X 3/8
514	P0899514	FLAT WASHER #10
515	P0899515	MAGNIFIED CURSOR
519	P0899519	FENCE BASE END CAP 50 X 50MM
521	P0899521	FENCE FACE
522	P0899522	FENCE BASE
523	P0899523	T-BOLT M6-1 X 20
524	P0899524	FLAT WASHER 6MM
525	P0899525	KNOB M6-1, D30, 5-LOBE
526	P0899526	SET SCREW M12-1.75 X 32 NYLON-TIPPED

BUY PARTS ONLINE AT GRIZZLY.COM!
Scan QR code to visit our Parts Store.

Fence Rails

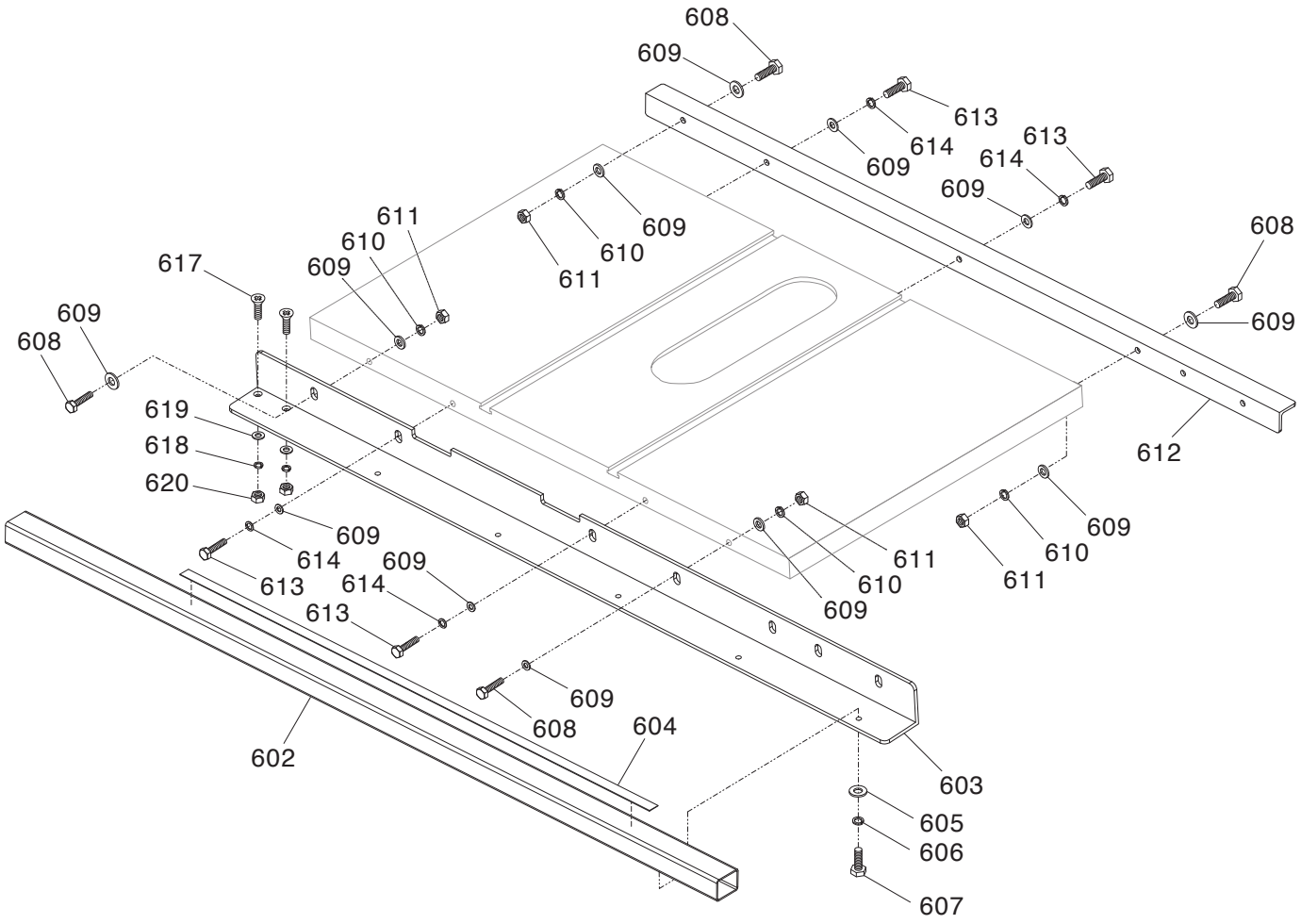

REF	PART #	DESCRIPTION
602	P0899602	FENCE GUIDE TUBE
603	P0899603	FENCE RAIL (FRONT)
604	P0899604	FENCE SCALE LABEL
605	P0899605	FLAT WASHER 6MM
606	P0899606	LOCK WASHER 6MM
607	P0899607	HEX BOLT 1/4-20 X 5/8
608	P0899608	HEX BOLT M10-1.5 X 35
609	P0899609	FLAT WASHER 10MM
610	P0899610	LOCK WASHER 10MM

REF	PART #	DESCRIPTION
611	P0899611	HEX NUT M10-1.5
612	P0899612	FENCE RAIL (REAR)
613	P0899613	HEX BOLT M10-1.5 X 25
614	P0899614	LOCK WASHER 10MM
617	P0899617	FLAT HD SCR M6-1 X 16
618	P0899618	LOCK WASHER 6MM
619	P0899619	FLAT WASHER 6MM
620	P0899620	HEX NUT M6-1

BUY PARTS ONLINE AT GRIZZLY.COM!
Scan QR code to visit our Parts Store.

Labels & Cosmetics

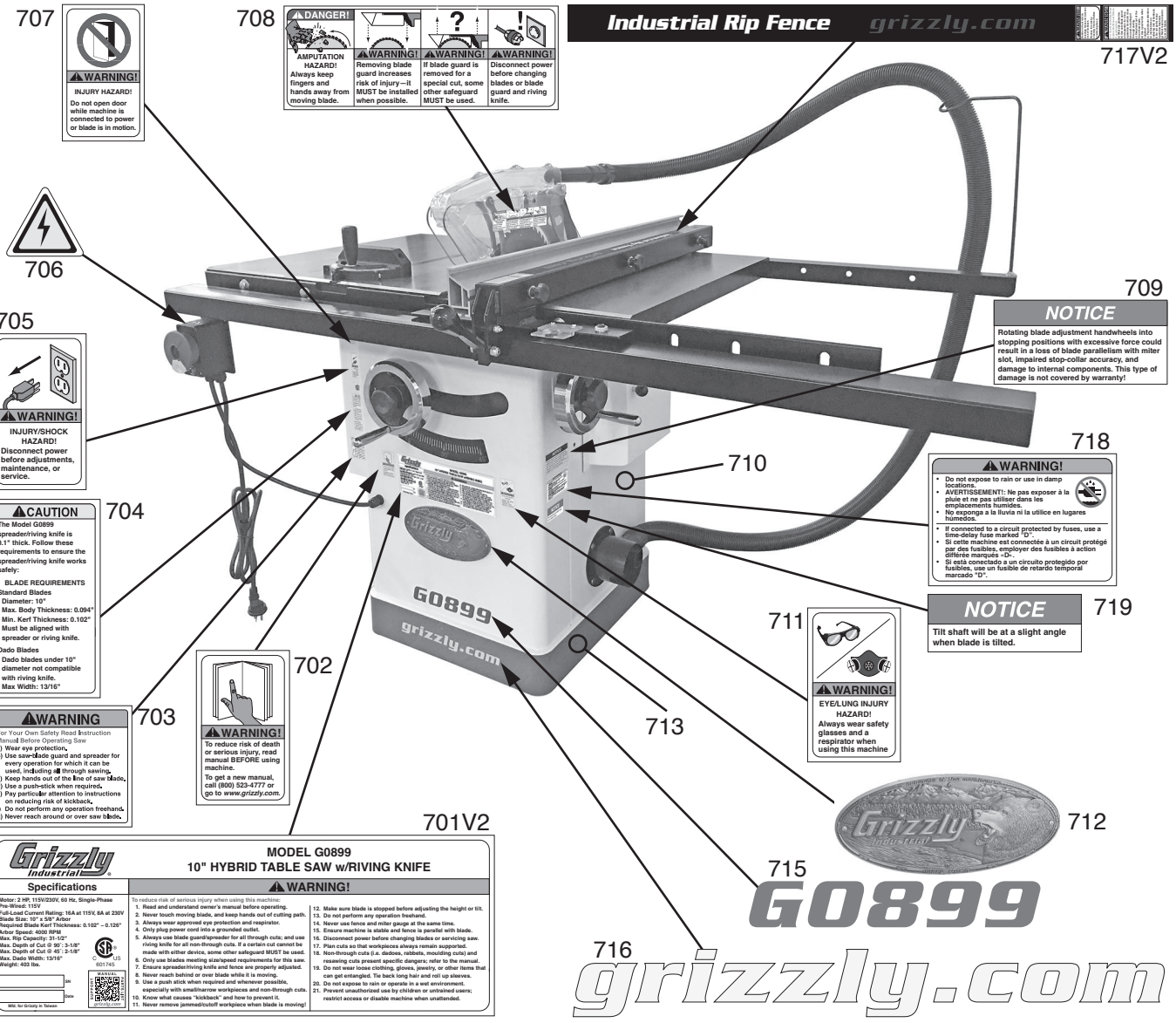

REF	PART #	DESCRIPTION
701V2	P0899701V2	MACHINE ID LABEL V2.10.20
702	P0899702	READ MANUAL LABEL
703	P0899703	TABLE SAW WARNING LABEL
704	P0899704	RIVING KNIFE CAUTION LABEL
705	P0899705	DISCONNECT POWER LABEL
706	P0899706	ELECTRICITY LABEL
707	P0899707	DO NOT OPEN DOOR WARNING LABEL
708	P0899708	BLADE GUARD LABEL
709	P0899709	HANDWHEEL NOTICE LABEL

REF	PART #	DESCRIPTION
710	P0899710	TOUCH-UP PAINT, GRIZZLY BEIGE
711	P0899711	EYE/LUNG HAZARD LABEL - SMALL
712	P0899712	GRIZZLY NAMEPLATE
713	P0899713	GRIZZLY GREEN TAPE
715	P0899715	MODEL NUMBER LABEL
716	P0899716	GRIZZLY.COM LABEL
717V2	P0899717V2	FENCE LABEL V2.01.20
718	P0899718	DO NOT EXPOSE TO RAIN LABEL
719	P0899719	TILT SHAFT NOTICE LABEL

⚠WARNING

Safety labels help reduce the risk of serious injury caused by machine hazards. If any label comes off or becomes unreadable, the owner of this machine MUST replace it in the original location before resuming operations. For replacements, contact (800) 523-4777 or www.grizzly.com.

BUY PARTS ONLINE AT GRIZZLY.COM!
Scan QR code to visit our Parts Store.