MODEL G0899
10" STATIONARY TABLE SAW w/RIVING KNIFE
OWNER'S MANUAL
(For models manufactured since 02/26)



C US
601745

COPYRIGHT © DECEMBER, 2019 BY GRIZZLY INDUSTRIAL, INC., REVISED FEBRUARY, 2026 (KS)
WARNING: NO PORTION OF THIS MANUAL MAY BE REPRODUCED IN ANY SHAPE OR FORM WITHOUT THE WRITTEN APPROVAL OF GRIZZLY INDUSTRIAL, INC.
#AI20510 PRINTED IN TAIWAN
V4.02.26

******Keep for Future Reference******

⚠ WARNING!

This manual provides critical safety instructions on the proper setup, operation, maintenance, and service of this machine/tool. Save this document, refer to it often, and use it to instruct other operators.

Failure to read, understand and follow the instructions in this manual may result in fire or serious personal injury—including amputation, electrocution, or death.

The owner of this machine/tool is solely responsible for its safe use. This responsibility includes but is not limited to proper installation in a safe environment, personnel training and usage authorization, proper inspection and maintenance, manual availability and comprehension, application of safety devices, cutting/sanding/grinding tool integrity, and the usage of personal protective equipment.

The manufacturer will not be held liable for injury or property damage from negligence, improper training, machine modifications or misuse.

⚠ WARNING!

Some dust created by power sanding, sawing, grinding, drilling, and other construction activities contains chemicals known to the State of California to cause cancer, birth defects or other reproductive harm. Some examples of these chemicals are:

- **Lead from lead-based paints.**
- **Crystalline silica from bricks, cement and other masonry products.**
- **Arsenic and chromium from chemically-treated lumber.**

Your risk from these exposures varies, depending on how often you do this type of work. To reduce your exposure to these chemicals: Work in a well ventilated area, and work with approved safety equipment, such as those dust masks that are specially designed to filter out microscopic particles.

Table of Contents

INTRODUCTION 2
- Contact Info 2
- Manual Accuracy 2
- Identification 3
- Controls & Components 4
- Glossary of Terms 5
- Machine Data Sheet 6

SECTION 1: SAFETY 9
- Safety Instructions for Machinery 9
- Additional Safety for Table Saws 11
- Preventing Kickback 12
- Protecting Yourself From Kickback 12

SECTION 2: POWER SUPPLY 13
- Converting Voltage to 230V 15

SECTION 3: SETUP 16
- Needed for Setup 16
- Unpacking 16
- Inventory 17
- Measuring Hardware 19
- Cleanup 20
- Site Considerations 21
- Assembly 22
- Dust Collection 27
- Test Run 28

SECTION 4: OPERATIONS 29
- Operation Overview 29
- Workpiece Inspection 30
- Non-Through & Through Cuts 30
- Blade Requirements 31
- Blade Selection 31
- Blade Installation 33
- Blade Guard Assembly 34
- Riving Knife 38
- Ripping 39
- Crosscutting 40
- Miter Cuts 40
- Blade Tilt/Bevel Cuts 41
- Dado Cutting 41
- Rabbet Cutting 43
- Resawing 45

SECTION 5: SAFETY ACCESSORIES 50
- Featherboards 50
- Push Sticks 53
- Push Blocks 54
- Narrow-Rip Auxiliary Fence & Push Block 55
- Outfeed & Support Tables 57
- Crosscut Sled 57

SECTION 6: ACCESSORIES 58

SECTION 7: MAINTENANCE 60
- Schedule 60
- Cleaning & Protecting 60
- Lubrication 61

SECTION 8: SERVICE 62
- Troubleshooting 62
- Blade Tilt Stops 64
- Miter Slot to Blade Parallelism 66
- Spreader or Riving Knife Alignment 68
- Fence Adjustments 70
- Fence Scale Calibration 73
- Table/Dado Insert Adjustment 74
- Miter Gauge Adjustments 75
- Belt Tension & Replacement 76

SECTION 9: WIRING 77
- Wiring Safety Instructions 77
- Wiring Diagram 78
- Electrical Components 79

SECTION 10: PARTS 80
- Body 80
- Trunnion 81
- Power Switch 83
- Blade Guard 84
- Miter Gauge 85
- Fence 86
- Fence Rails 87
- Labels & Cosmetics 88

WARRANTY & RETURNS 89

INTRODUCTION

Contact Info

We stand behind our machines! If you have questions or need help, contact us with the information below. Before contacting, make sure you get the **serial number** and **manufacture date** from the machine ID label. This will help us help you faster.

Grizzly Technical Support
1815 W. Battlefield
Springfield, MO 65807
Phone: (570) 546-9663
Email: techsupport@grizzly.com

We want your feedback on this manual. What did you like about it? Where could it be improved? Please take a few minutes to give us feedback.

Grizzly Documentation Manager
P.O. Box 2069
Bellingham, WA 98227-2069
Email: manuals@grizzly.com

Manual Accuracy

We are proud to provide a high-quality owner's manual with your new machine!

We made every effort to be exact with the instructions, specifications, drawings, and photographs in this manual. Sometimes we make mistakes, but our policy of continuous improvement also means that **sometimes the machine you receive is slightly different than shown in the manual**.

If you find this to be the case, and the difference between the manual and machine leaves you confused or unsure about something, check our website for an updated version. We post current manuals and manual updates for free on our website at **www.grizzly.com**.

Alternatively, you can call our Technical Support for help. Before calling, make sure you write down the **manufacture date** and **serial number** from the machine ID label (see below). This information is required for us to provide proper tech support, and it helps us determine if updated documentation is available for your machine.

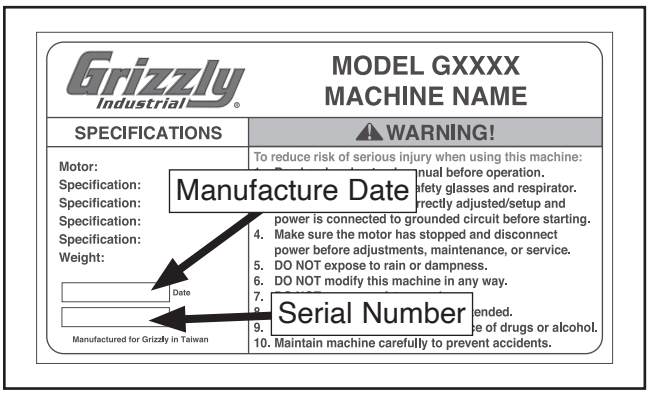

Identification

Become familiar with the names and locations of the controls and features shown below to better understand the instructions in this manual.

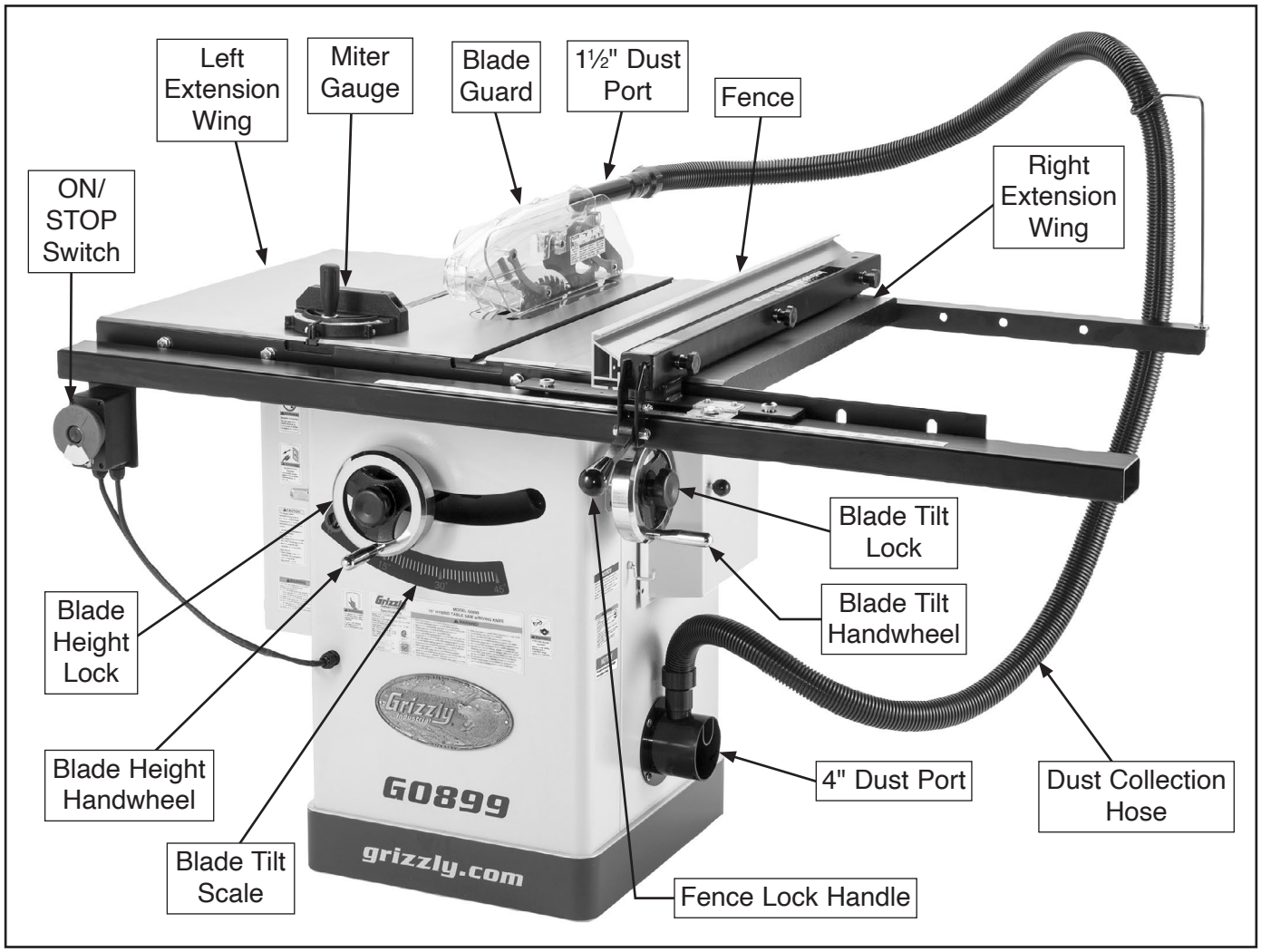

⚠CAUTION

For Your Own Safety Read Instruction Manual Before Operating Saw

a) Wear eye protection.
b) Use saw-blade guard and spreader for every operation for which it can be used, including all through sawing.
c) Keep hands out of the line of saw blade.
d) Use a push-stick when required.
e) Pay particular attention to instructions on reducing risk of kickback.
f) Do not perform any operation freehand.
g) Never reach around or over saw blade.

Controls & Components

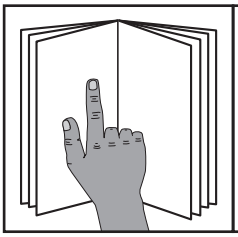

⚠WARNING

To reduce your risk of serious injury, read this entire manual BEFORE using machine.

Refer to the following figures and descriptions to become familiar with the basic controls and components of this machine. Understanding these items and how they work will help you understand the rest of the manual and minimize your risk of injury when operating this machine.

A. ON/STOP Switch: Turns motor ***ON*** when pulled out; turns motor ***OFF*** when pressed in.

B. ON/STOP Switch Disabling Key: Disables switch when yellow key is removed.

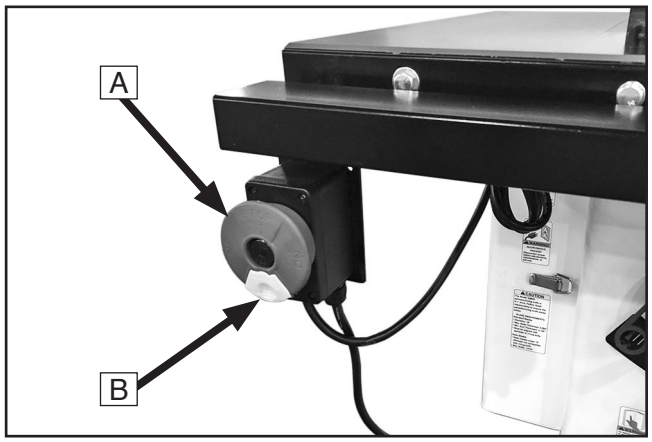

Figure 1. Location of ON/STOP switch.

C. Handwheel Locks: Lock blade height and angle when tightened (one on each handwheel).

D. Blade Tilt Handwheel: Adjusts angle of blade tilt from 90°–45°.

E. Blade Height Handwheel: Adjusts blade height from 0"–3⅛".



Figure 2. Blade adjustment handwheels and locks.

F. Fence Lock Handle: Locks fence when pushed down, unlocks fence when pulled up.

G. Fence: Guides workpiece as it moves into blade and determines angle of cut. Fence face can be positioned for standard cutting operations, or placed in lower position for blade guard clearance during narrow ripping operations.

H. Fence Lock Knobs: Secure fence when tightened; allow fence to be repositioned along fence tube when loosened.

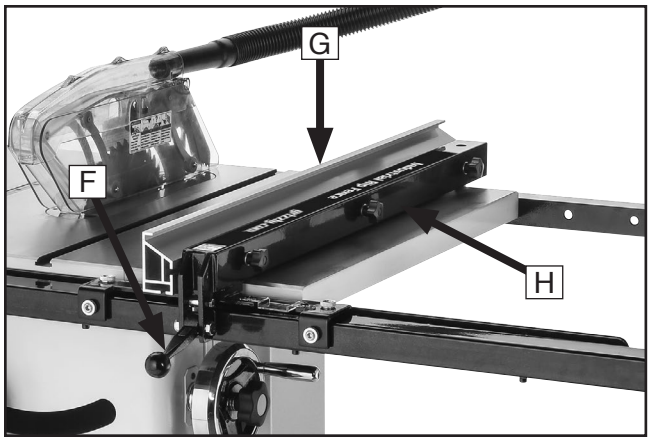

Figure 3. Location of fence controls.

Glossary of Terms

The following is a list of common definitions, terms and phrases used throughout this manual as they relate to this table saw and woodworking in general. Become familiar with these terms for assembling, adjusting or operating this machine. Your safety is **VERY** important to us at Grizzly!

Arbor: A metal shaft extending from the drive mechanism that is the mounting location for the saw blade.

Bevel Edge Cut: A cut made with the blade tilted to an angle between 0° and 45° to cut a beveled edge onto a workpiece. Refer to **Page 41** for more details.

Blade Guard Assembly: Metal or plastic safety device that mounts over the saw blade. Its function is to prevent the operator from coming into contact with the saw blade. Refer to **Page 34** for more details.

Crosscut: Cutting operation in which the crosscut fence is used to cut across the shortest width of the workpiece. Refer to **Page 40** for more details.

Dado Blade: Single blade or set of blades used to cut grooves and rabbets. This saw and arbor are not intended to safely use a dado blade larger than 13/16" wide and 8" in diameter, as specified on **Page 41**.

Dado Cut: Cutting operation that uses a dado blade to cut a flat bottomed groove into the face of the workpiece. Refer to **Page 41** for more details.

Featherboard: Safety device used to keep the workpiece against the rip fence and against the table surface. Refer to **Page 50** for more details.

Kerf: The resulting cut or gap in the workpiece after the saw blade passes through during a cutting operation.

Kickback: An event in which the workpiece is propelled back towards the operator at a high rate of speed.

Non-Through Cut: A cut in which the blade does not cut through the top of the workpiece. Refer to **Page 30** for more details.

Parallel: Being an equal distance apart at every point along two given lines or planes (i.e. the rip fence face is parallel to the face of the saw blade).

Perpendicular: Lines or planes that intersect and form right angles (i.e. the blade is perpendicular to the table surface).

Push Stick: Safety device used to push the workpiece through a cutting operation. Used most often when rip cutting thin workpieces. Refer to **Page 53** for more details.

Rabbet: Cutting operation that creates an L-shaped channel along the edge of the workpiece. Refer to **Page 43** for more details.

Rip Cut: Cutting operation in which the rip fence is used to cut across the widest width of the workpiece. Refer to **Page 39** for more details.

Riving Knife: Metal plate located behind the blade. It maintains the kerf opening in the wood when performing a cutting operation. Refer to **Page 38** for more details.

Straightedge: A tool used to check the flatness, parallelism, or consistency of a surface(s).

Thin Kerf Blade: A blade with a kerf or thickness that is thinner than a standard blade cannot be used on this saw without using a thin-kerf riving knife.

Through Cut: A cut in which the blade cuts completely through the workpiece. Refer to **Page 31** for more details.

MACHINE DATA SHEET

Customer Service #: (570) 546-9663 · To Order Call: (800) 523-4777 · Fax #: (800) 438-5901

MODEL G0899
10" STATIONARY TABLE SAW W/RIVING KNIFE

Weight..... 382 lbs.
Width (side-to-side) x Depth (front-to-back) x Height..... 66 x 40 x 48 in.
Footprint (Length x Width)..... 19-1/2 x 20-1/2 in.

Shipping Dimensions:

Carton #1

Type..... Cardboard Box on Wood Skids
Content..... Machine
Weight..... 377 lbs.
Length x Width x Height..... 30 x 29 x 38 in.
Must Ship Upright..... Yes

Carton #2

Type..... Cardboard Box
Content..... Fence & Rails
Weight..... 73 lbs.
Length x Width x Height..... 69 x 20 x 8 in.
Must Ship Upright..... No

Electrical:

Power Requirement..... 115V or 230V, Single-Phase, 60 Hz
Prewired Voltage..... 115V
Full-Load Current Rating..... 16A at 115V, 8A at 230V
Minimum Circuit Size..... 20A at 115V, 15A at 230V
Connection Type..... Cord & Plug
Power Cord Included..... Yes
Power Cord Length..... 6 ft.
Power Cord Gauge..... 14 AWG
Plug Included..... Yes
Included Plug Type..... 5-20 for 115V
Recommended Plug Type..... 6-15 for 230V
Switch Type..... Push Button w/Large Shut-Off Paddle & Removable Key
Voltage Conversion Kit..... P0899224X

Motors:

Main

Horsepower..... 2 HP
Phase..... Single-Phase
Amps..... 16A/8A
Speed..... 3450 RPM
Type..... TEFC Capacitor-Start/Run Induction
Power Transfer ..... Belt
Bearings..... Shielded & Permanently Lubricated
Centrifugal Switch/Contacts Type..... External

Main Specifications:

Main Information

Table Saw Type	Stationary
Maximum Standard Blade Diameter	10 in.
Maximum Dado Blade Diameter	8 in.
Arbor Size	5/8 in.
Arbor Speed	4000 RPM
Maximum Width of Dado	13/16 in.
Blade Tilt Direction	Left
Max Blade Tilt	45 deg.
Maximum Depth of Cut At 90 Degrees	3-1/8 in.
Maximum Depth of Cut At 45 Degrees	2-1/8 in.
Max Rip Right of Blade w/Included Fence & Rails	31-1/2 in.
Max Rip Left of Blade w/Included Fence & Rails	11-3/8 in.

Additional Blade Information

Included Blade Information	10 in. x 40T
Riving Knife/Spreader Thickness	0.100 in.
Required Blade Body Thickness	0.063 - 0.094 in.
Required Blade Kerf Thickness	0.102 - 0.126 in.
Rim Speed at Max Blade Diameter	10,500 FPM

Table Information

Floor to Table Height	34-1/4 in.
Table Size with Extension Wings Width	40-1/8 in.
Table Size with Extension Wings Depth	27 in.
Distance Front of Table to Center of Blade	16-1/4 in.
Distance Front of Table to Blade At Maximum Cut	11-1/2 in.
Main Table Size Thickness	1-1/2 in.

Fence Information

Fence Type	Camlock T-Shape w/High-Low Profile Face
Fence Size Length	34-5/8 in.
Fence Size Width	4-5/8 in.
Fence Size Height	3 in.
Fence Rail Type	Square Steel Tubing/Angle Iron
Fence Rail Length	63 in.
Fence Rail Width	3 in.
Fence Rail Height	1-3/4 in.

Miter Gauge Information

Miter Gauge Slot Type	T-Slot
Miter Gauge Slot Size Width	3/4 in.
Miter Gauge Slot Size Height	3/8 in.

Construction

Table	Precision-Ground Cast Iron
Wings	Precision-Ground Cast Iron
Cabinet	Pre-Formed Steel
Trunnions	Cast Iron
Fence Assembly	Steel w/Aluminum Fence
Rails	Steel
Miter Gauge Construction	Cast Iron
Guard	Clear Plastic
Body/Cabinet Paint Type/Finish	Powder Coat
Arbor Bearings	Sealed & Permanently Lubricated

Other Related Information

Number of Dust Ports	2
Dust Port Size	4 in.
Compatible Mobile Base	T28922

Other Specifications:

Country of Origin	Taiwan
Warranty	1 Year
Approximate Assembly & Setup Time	1 Hour
Serial Number Location	Machine ID Label
Sound Rating	87 dB
ISO 9001 Factory	Yes
Certified by a Nationally Recognized Testing Laboratory (NRTL)	Yes

Features:

Fully-Enclosed Quick-Release Blade Guard and Spreader
Quick-Release Riving Knife
Hinged Motor Cover
4" Dust Port
Heavy Cast Handwheels
T-Slot Miter Gauge
Poly-V Drive Belt for Reduced Noise/Vibration
Precision-Ground Cast-Iron Table
Cabinet-Mounted Cast-Iron Trunnions
Durable Powder-Coated Finish
Deluxe 2-Position Aluminum Rip Fence
Easy-Glide Fence System with Micro-Adjustment
Standard & Dado Table Inserts
Built-In Dust Port on Blade Guard
Included 10" x 40T Carbide-Tipped Blade

SECTION 1: SAFETY

For Your Own Safety, Read Instruction Manual Before Operating This Machine

The purpose of safety symbols is to attract your attention to possible hazardous conditions. This manual uses a series of symbols and signal words intended to convey the level of importance of the safety messages. The progression of symbols is described below. Remember that safety messages by themselves do not eliminate danger and are not a substitute for proper accident prevention measures. Always use common sense and good judgment.

⚠DANGER **Indicates an imminently hazardous situation which, if not avoided, WILL result in death or serious injury.**

⚠WARNING **Indicates a potentially hazardous situation which, if not avoided, COULD result in death or serious injury.**

⚠CAUTION **Indicates a potentially hazardous situation which, if not avoided, MAY result in minor or moderate injury. It may also be used to alert against unsafe practices.**

NOTICE **Alerts the user to useful information about proper operation of the machine to avoid machine damage.**

Safety Instructions for Machinery

⚠WARNING

OWNER'S MANUAL. Read and understand this owner's manual BEFORE using machine.

TRAINED OPERATORS ONLY. Untrained operators have a higher risk of being hurt or killed. Only allow trained/supervised people to use this machine. When machine is not being used, disconnect power, remove switch keys, or lock-out machine to prevent unauthorized use—especially around children. Make your workshop kid proof!

DANGEROUS ENVIRONMENTS. Do not use machinery in areas that are wet, cluttered, or have poor lighting. Operating machinery in these areas greatly increases the risk of accidents and injury.

MENTAL ALERTNESS REQUIRED. Full mental alertness is required for safe operation of machinery. Never operate under the influence of drugs or alcohol, when tired, or when distracted.

ELECTRICAL EQUIPMENT INJURY RISKS. You can be shocked, burned, or killed by touching live electrical components or improperly grounded machinery. To reduce this risk, only allow qualified service personnel to do electrical installation or repair work, and always disconnect power before accessing or exposing electrical equipment.

DISCONNECT POWER FIRST. Always disconnect machine from power supply BEFORE making adjustments, changing tooling, or servicing machine. This prevents an injury risk from unintended startup or contact with live electrical components.

EYE PROTECTION. Always wear ANSI-approved safety glasses or a face shield when operating or observing machinery to reduce the risk of eye injury or blindness from flying particles. Everyday eyeglasses are NOT approved safety glasses.

⚠WARNING

WEARING PROPER APPAREL. Do not wear loose clothing, gloves, neckties, or jewelry that can become entangled in moving parts. Always tie back or cover long hair. Wear non-slip footwear to reduce risk of slipping and losing control or accidentally contacting cutting tool or moving parts.

HAZARDOUS DUST. Dust created by machinery operations may cause cancer, birth defects, or long-term respiratory damage. Be aware of dust hazards associated with each workpiece material. Always wear a NIOSH-approved respirator to reduce your risk.

HEARING PROTECTION. Always wear hearing protection when operating or observing loud machinery. Extended exposure to this noise without hearing protection can cause permanent hearing loss.

REMOVE ADJUSTING TOOLS. Tools left on machinery can become dangerous projectiles upon startup. Never leave chuck keys, wrenches, or any other tools on machine. Always verify removal before starting!

USE CORRECT TOOL FOR THE JOB. Only use this tool for its intended purpose—do not force it or an attachment to do a job for which it was not designed. Never make unapproved modifications—modifying tool or using it differently than intended may result in malfunction or mechanical failure that can lead to personal injury or death!

AWKWARD POSITIONS. Keep proper footing and balance at all times when operating machine. Do not overreach! Avoid awkward hand positions that make workpiece control difficult or increase the risk of accidental injury.

CHILDREN & BYSTANDERS. Keep children and bystanders at a safe distance from the work area. Stop using machine if they become a distraction.

GUARDS & COVERS. Guards and covers reduce accidental contact with moving parts or flying debris. Make sure they are properly installed, undamaged, and working correctly BEFORE operating machine.

FORCING MACHINERY. Do not force machine. It will do the job safer and better at the rate for which it was designed.

NEVER STAND ON MACHINE. Serious injury may occur if machine is tipped or if the cutting tool is unintentionally contacted.

STABLE MACHINE. Unexpected movement during operation greatly increases risk of injury or loss of control. Before starting, verify machine is stable and mobile base (if used) is locked.

USE RECOMMENDED ACCESSORIES. Consult this owner's manual or the manufacturer for recommended accessories. Using improper accessories will increase the risk of serious injury.

UNATTENDED OPERATION. To reduce the risk of accidental injury, turn machine ***OFF*** and ensure all moving parts completely stop before walking away. Never leave machine running while unattended.

MAINTAIN WITH CARE. Follow all maintenance instructions and lubrication schedules to keep machine in good working condition. A machine that is improperly maintained could malfunction, leading to serious personal injury or death.

DAMAGED PARTS. Regularly inspect machine for damaged, loose, or mis-adjusted parts—or any condition that could affect safe operation. Immediately repair/replace BEFORE operating machine. For your own safety, DO NOT operate machine with damaged parts!

MAINTAIN POWER CORDS. When disconnecting cord-connected machines from power, grab and pull the plug—NOT the cord. Pulling the cord may damage the wires inside. Do not handle cord/plug with wet hands. Avoid cord damage by keeping it away from heated surfaces, high traffic areas, harsh chemicals, and wet/damp locations.

EXPERIENCING DIFFICULTIES. If at any time you experience difficulties performing the intended operation, stop using the machine! Contact our Technical Support at (570) 546-9663.

Additional Safety for Table Saws

⚠WARNING

Serious cuts, amputation, or death can occur from contact with rotating saw blade during operation. Workpieces, broken blades, or flying particles thrown by blade can blind or strike operators or bystanders with deadly force. To reduce the risk of these hazards, operator and bystanders MUST completely heed the hazards and warnings below.

HAND & BODY POSITIONING. Keep hands away from saw blade and out of blade path during operation, so they cannot accidentally slip into blade. Only operate at front of machine and always stand to side of blade path. Never reach behind or over blade, or under blade guard when blade is spinning.

BLADE GUARD. The blade guard protects operator from rotating saw blade. Make sure blade guard is installed, adjusted correctly, and used for all possible "through cuts." Promptly repair or replace if damaged. Re-install immediately after operations that require its removal.

RIVING KNIFE. Use riving knife for all "non-through cuts", except for dadoes. Make sure it is aligned and positioned correctly. Promptly repair or replace it if damaged.

KICKBACK. Kickback occurs when saw blade ejects workpiece back toward operator. Know how to reduce risk of kickback, and learn how to protect yourself if it does occur.

FEEDING WORKPIECE. Feeding workpiece incorrectly increases risk of kickback. Always allow blade to reach full speed before cutting, feed workpiece from front of saw, making sure workpiece is flat against table and a fence, miter gauge, or other guide is used to feed workpiece in a straight line. Feed cuts through to completion. Never start saw with workpiece touching blade or pull workpiece from behind blade. Never back workpiece out of cut, move it sideways, or perform a “freehand” operation. Never plunge cut.

DADO AND RABBET OPERATIONS. Dado and rabbeting operations require special attention since they must be performed with blade guard removed, which increases risk of blade contact. DO NOT attempt dado or rabbeting operations without first reading these sections in this manual.

PUSH STICKS/PUSH BLOCKS. To reduce risk of accidental blade contact, use push sticks/push blocks whenever possible. In event of an accident, these will often take damage that would have occurred to hands/fingers.

FENCE. To reduce risk of kickback, make sure fence remains properly adjusted and parallel with blade. Always lock fence before using. Do not use fence while using miter gauge. Make sure fence is not touching the blade when the saw is started.

CUT-OFF PIECES. To avoid risk of injury due to blade contact, turn saw ***OFF*** and allow blade to completely stop before removing cut-off pieces near blade or trapped between blade and table insert. Never use your hands to move cut-off pieces away from blade while saw is running.

BLADE ADJUSTMENTS. Adjusting blade height or tilt during operation increases risk of crashing blade and sending metal fragments flying with deadly force at operator or bystanders. Only adjust blade height and tilt when blade is completely stopped and saw is ***OFF***. Make sure blade is not touching the guard, riving knife, or workpiece before the saw is started.

CHANGING BLADES. Accidental startup while changing saw blade can result in serious injury. To reduce risk of accidental blade contact, always disconnect power before changing blades.

DAMAGED SAW BLADES. Damaged saw blade teeth can become deadly projectiles. Never use blades that have been dropped or damaged.

CUTTING CORRECT MATERIAL. Cutting metal, glass, stone, tile, etc., increases risk of operator injury due to kickback or flying particles. Only cut natural and man-made wood products, laminate-covered wood products, and some plastics. Never cut materials not intended for this saw.

Preventing Kickback

Below are ways to avoid the most common causes of kickback:

- Only cut workpieces with at least one smooth and straight edge. DO NOT cut warped, cupped or twisted wood.
- Keep the blade guard installed and working correctly for all through cuts.
- Never attempt freehand cuts. If the workpiece is not fed parallel with the blade, kickback will likely occur. Always use the rip fence or miter gauge to guide the workpiece.
- Make sure the spreader or riving knife is aligned with the blade and secured tightly. A misaligned spreader or riving knife can cause the workpiece to catch or bind, increasing the chance of kickback.
- Take the time to check and adjust the rip fence parallel with the blade; otherwise, the chances of kickback are extreme.
- The spreader or riving knife maintains the kerf in the workpiece, reducing the chance of kickback. Always use the riving knife for all non-through operations, unless a dado blade is installed. Always use the spreader with the blade guard for all through cuts.
- Feed cuts through to completion. Anytime you stop feeding a workpiece in the middle of a cut, the chance of kickback is greatly increased.
- Keep the blade guard installed and in good working order. Only remove it when performing non-through cuts and immediately re-install the blade guard when finished. Remember, always use the riving knife for all non-through operations, unless a dado blade is installed.
- Make multiple, shallow passes when performing a non-through cut. Making a deep non-through cut will greatly increase the chance of kickback.
- Never move the workpiece backwards or try to back it out of a cut while the blade is moving. If you cannot complete a cut for some reason, stop the saw motor and allow the blade to completely stop before backing the workpiece out. Promptly fix the condition that prevented you from completing the cut before starting the saw again.

Protecting Yourself From Kickback

Even if you know how to prevent kickback, it may still happen. Here are some ways to protect yourself if kickback DOES occur:

- Stand to the side of the blade during every cut. If kickback does occur, the thrown workpiece usually travels directly in front of the blade.
- Wear safety glasses or a face shield. In the event of kickback, your eyes and face are the most vulnerable part of your body.
- Never, for any reason, place your hand behind the blade or under blade guard. Should kickback occur, your hand could be pulled into the blade, which could cause amputation.
- Use a push stick to keep your hands farther away from the moving blade. If kickback occurs, the push stick will most likely take the damage your hand would have received.
- Use featherboards or anti-kickback devices to assist with feeding and prevent or slow down kickback.

⚠CAUTION

Statistics show that most common accidents among table saw users can be linked to kickback. Kickback is typically defined as the high-speed expulsion of stock from the table saw toward its operator. In addition to the danger of the operator or others in the area being struck by the flying stock, it is often the case that the operator's hands are pulled into the blade during kickback.

SECTION 2: POWER SUPPLY

Availability

Before installing the machine, consider the availability and proximity of the required power supply circuit. If an existing circuit does not meet the requirements for this machine, a new circuit must be installed. To minimize the risk of electrocution, fire, or equipment damage, installation work and electrical wiring must be done by an electrician or qualified service personnel in accordance with all applicable codes and standards.



⚠WARNING

Electrocution, fire, shock, or equipment damage may occur if machine is not properly grounded and connected to power supply.

Full-Load Current Rating

The full-load current rating is the amperage a machine draws at 100% of the rated output power. On machines with multiple motors, this is the amperage drawn by the largest motor or sum of all motors and electrical devices that might operate at one time during normal operations.

Full-Load Current Rating at 115V ..... 16 Amps
Full-Load Current Rating at 230V ..... 8 Amps

The full-load current is not the maximum amount of amps that the machine will draw. If the machine is overloaded, it will draw additional amps beyond the full-load rating.

If the machine is overloaded for a sufficient length of time, damage, overheating, or fire may result—especially if connected to an undersized circuit. To reduce the risk of these hazards, avoid overloading the machine during operation and make sure it is connected to a power supply circuit that meets the specified circuit requirements.

Circuit Information

A power supply circuit includes all electrical equipment between the breaker box or fuse panel in the building and the machine. The power supply circuit used for this machine must be sized to safely handle the full-load current drawn from the machine for an extended period of time. (If this machine is connected to a circuit protected by fuses, use a time delay fuse marked D.)

⚠CAUTION

For your own safety and protection of property, consult an electrician if you are unsure about wiring practices or electrical codes in your area.

Note: *Circuit requirements in this manual apply to a dedicated circuit—where only one machine will be running on the circuit at a time. If machine will be connected to a shared circuit where multiple machines may be running at the same time, consult an electrician or qualified service personnel to ensure circuit is properly sized for safe operation.*

Circuit Requirements for 115V

This machine is prewired to operate on a power supply circuit that has a verified ground and meets the following requirements:

Nominal Voltage 110V, 115V, 120V
Cycle ..... 60 Hz
Phase ..... Single-Phase
Circuit Rating ..... 20 Amps
Plug/Receptacle ..... NEMA 5-20

Circuit Requirements for 230V

This machine can be converted to operate on a power supply circuit that has a verified ground and meets the requirements listed below. (Refer to **Voltage Conversion** instructions for details.)

Nominal Voltage 208V, 220V, 230V, 240V
Cycle ..... 60 Hz
Phase ..... Single-Phase
Circuit Rating ..... 15 Amps
Plug/Receptacle ..... NEMA 6-15

Grounding Requirements

This machine MUST be grounded. In the event of certain malfunctions or breakdowns, grounding reduces the risk of electric shock by providing a path of least resistance for electric current.

For 115V operation: This machine is equipped with a power cord that has an equipment-grounding wire and a grounding plug (see following figure). The plug must only be inserted into a matching receptacle (outlet) that is properly installed and grounded in accordance with all local codes and ordinances.

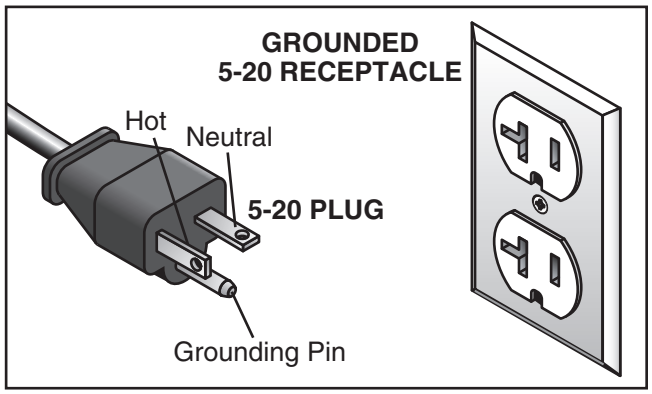

Figure 4. Typical 5-20 plug and receptacle.

For 230V operation: The plug specified under "Circuit Requirements for 230V" on the previous page has a grounding prong that must be attached to the equipment-grounding wire inside the included power cord. The plug must only be inserted into a matching receptacle (see following figure) that is properly installed and grounded in accordance with all local codes and ordinances.

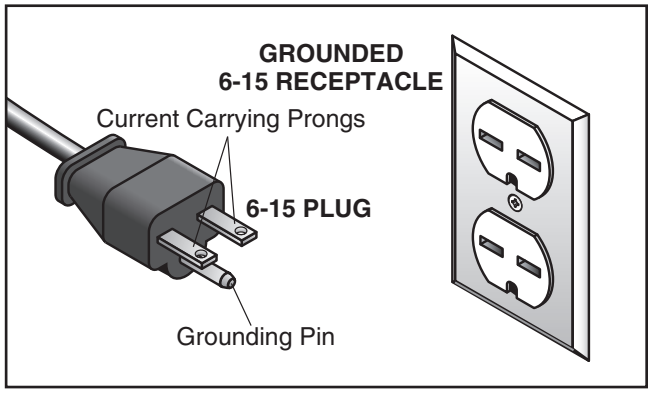

Figure 5. Typical 6-15 plug and receptacle.

⚠WARNING

Serious injury could occur if you connect machine to power before completing setup process. DO NOT connect to power until instructed later in this manual.

Improper connection of the equipment-grounding wire can result in a risk of electric shock. The wire with green insulation (with or without yellow stripes) is the equipment-grounding wire. If repair or replacement of the power cord or plug is necessary, do not connect the equipment-grounding wire to a live (current carrying) terminal.

Check with a qualified electrician or service personnel if you do not understand these grounding requirements, or if you are in doubt about whether the machine is properly grounded. If you ever notice that a cord or plug is damaged or worn, disconnect it from power, and immediately replace it with a new one.

Extension Cords

We do not recommend using an extension cord with this machine. If you must use an extension cord, only use it if absolutely necessary and only on a temporary basis.

Extension cords cause voltage drop, which can damage electrical components and shorten motor life. Voltage drop increases as the extension cord size gets longer and the gauge size gets smaller (higher gauge numbers indicate smaller sizes).

Any extension cord used with this machine must be in good condition and contain a ground wire and matching plug/receptacle. Additionally, it must meet the following size requirements:

Minimum Gauge Size.....12 AWG
Maximum Length (Shorter is Better).....50 ft.

Converting Voltage to 230V

The voltage conversion MUST be performed by an electrician or qualified service personnel.

The voltage conversion procedure consists of rewiring the motor, replacing the circuit breaker, and installing the correct plug. A wiring diagram is provided on **Page 78** for your reference.

Items Needed **Qty**
- Phillips Head Screwdriver #2 1
- Electrical Tape..... As Needed
- Wire Cutters/Stripper..... 1
- NEMA 6-15 Plug..... 1
- Circuit Breaker 10A (P0899224X) 1

To convert Model G0899 to 230V:

1. DISCONNECT MACHINE FROM POWER!

2. Cut off existing 5-20 plug.

3. Open motor junction box, then loosen two wire nuts indicated in **Figure 6**.

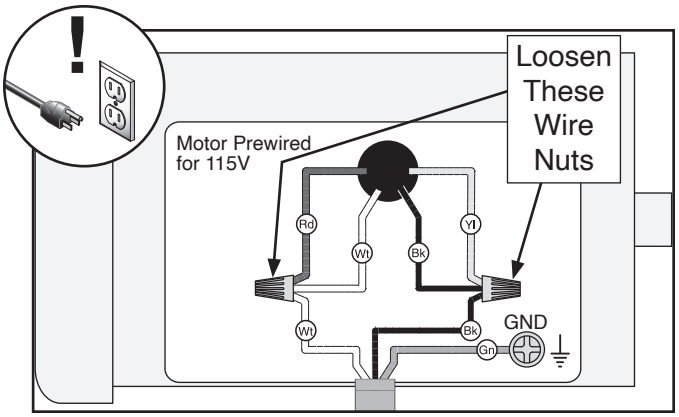

Figure 6. Motor prewired for 115V.

4. Use wire nuts to connect wires as indicated in **Figure 7**. Twist wire nuts onto their respective wires and wrap them with electrical tape so they will not come loose during operation.

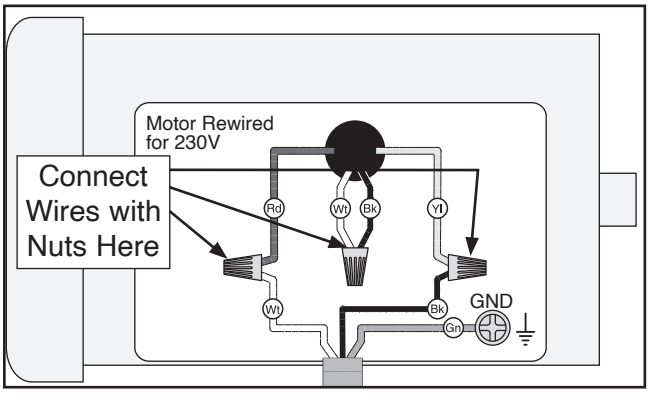

Figure 7. Motor rewired for 230V.

5. Close and secure motor junction box.

6. Remove ON/STOP switch cover from switch box.

7. Replace pre-installed 20A circuit breaker (see **Figure 8**) with 10A circuit breaker (part P0899224X), then re-install switch cover.

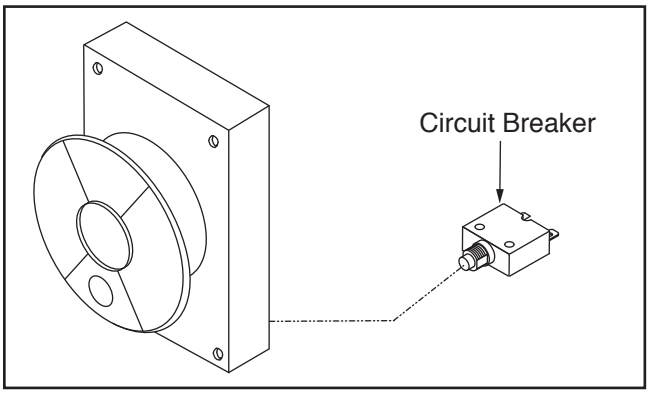

Figure 8. Location of circuit breaker.

8. Install a 6-15 plug on power cord, according to plug manufacturer's instructions.

— If plug manufacturer's instructions are not available, NEMA standard 6-15 plug wiring is provided on **Page 78**.

SECTION 3: SETUP

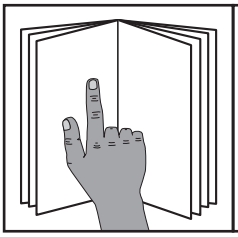

⚠WARNING

To reduce your risk of serious injury, read this entire manual BEFORE using machine.

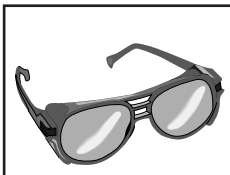

⚠WARNING

Eye injury hazard! Always wear safety glasses when using this machine.

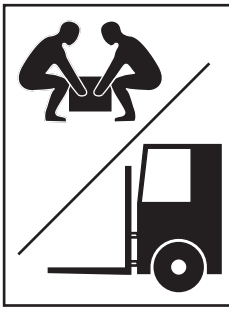

⚠WARNING

Lifting heavy machinery or parts without proper assistance or equipment may result in strains, back injuries, crushing injuries, or property damage.

Needed for Setup

The following are needed to complete the setup process, but are not included with the machine:

Description	Qty
• Additional Person	1
• Safety Glasses for Each Person	1
• Cleaner/Degreaser (**Page 20**)	As Needed
• Disposable Shop Rags	As Needed
• Straightedge 4'	1
• Wrench or Socket 10mm	1
• Wrench or Socket 13mm	1
• Wrench or Socket 14mm	1
• Phillips Head Screwdriver #2	1
• Dust Collection System	1
• Dust Hose 4"	1
• Hose Clamps 4"	2
• Masking Tape	As Needed

Unpacking

This machine was carefully packaged for safe transport. When unpacking, separate all enclosed items from packaging materials and inspect them for shipping damage. ***If items are damaged, please call us immediately at (570) 546-9663.***

IMPORTANT: Save all packaging materials until you are completely satisfied with the machine and have resolved any issues between Grizzly or the shipping agent. *You MUST have the original packaging to file a freight claim. It is also extremely helpful if you need to return your machine later.*

Inventory

The following is a list of items shipped with your machine. Before beginning setup, lay these items out and inventory them.

If any non-proprietary parts are missing (e.g. a nut or a washer), we will gladly replace them; or for the sake of expediency, replacements can be obtained at your local hardware store.

NOTICE

If you cannot find an item on this list, carefully check around/inside the machine and packaging materials. Often, these items get lost in packaging materials while unpacking or they are pre-installed at the factory.

Box Contents (Figure 9–Figure 11)	Qty
A. Table Saw w/Standard Table Insert	1
B. Extension Wings	2
C. Saw Blade 10" x 40T	1
D. Motor Door	1
E. Arbor Wrench 13/27mm	1
F. Dado Table Insert (For 8" Blades Only)	1
G. Blade Guard Dust Port	1
H. Blade Guard Assembly	1
I. Hex Wrench 6-Piece Set 2.5-8mm	1
J. Riving Knife	1
K. Miter Gauge	1
L. Dust Hose Adapters	2
M. Push Stick	1
N. Dado Blade Arbor Flange	1
O. Dust Port 4"	1
P. Handwheels	2
Q. Handwheel Lock Knobs	2
R. Handwheel Handles	2
S. Dust Hose 94" x 1½"	1
T. Hose Support Arm	1
U. Dust Hose 3" x 26"	1
V. Hose Clamp 3¼"	2
W. Cabinet Access Door	1
X. Door Latch	1
—Phillips Head Screws 8/32" x 3/8"	2
—Hex Nuts 8/32"	2
Y. Hinge Pins	2
Z. Push Stick Hangar	1
—Hex Nuts ¼"-20	2
—Flat Washers 5mm	2



Figure 9. Table saw w/standard table insert.

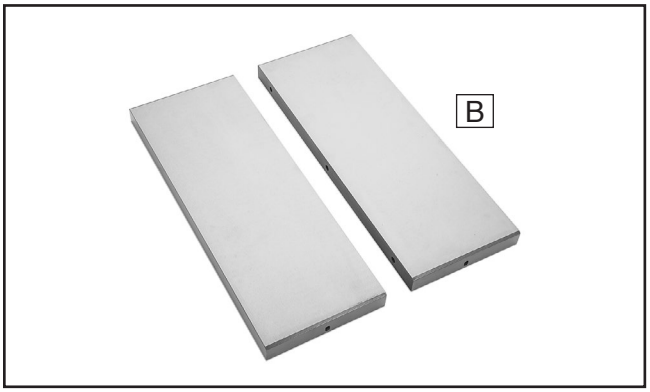

Figure 10. Extension wings.

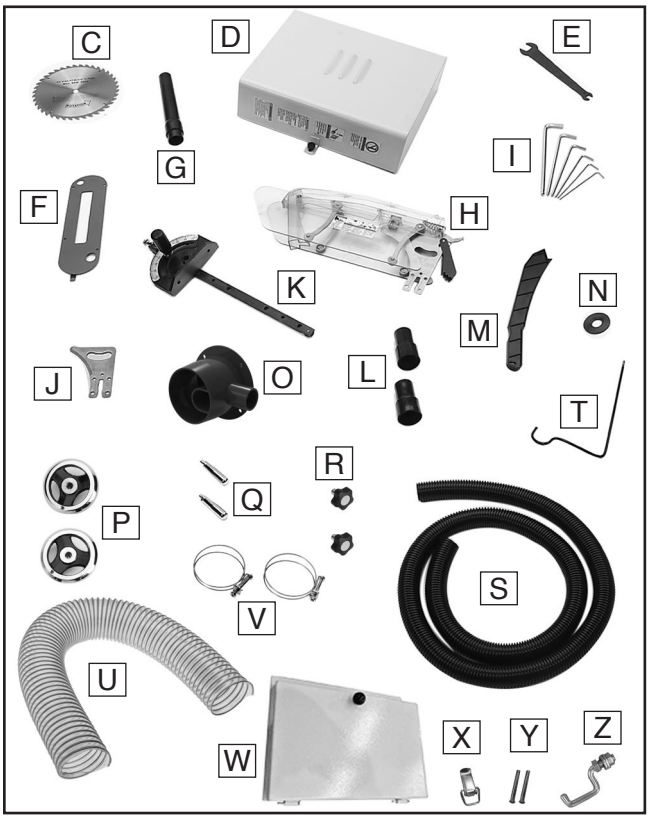

Figure 11. Component inventory.

Box Contents Continued (Figure 12) **Qty**

AA. Front Rail Tube 63" 1
AB. Front Rail Tape Scale 1
AC. Front Rail 55" 1
AD. Rear Rail 57" 1
AE. Fence Assembly 1

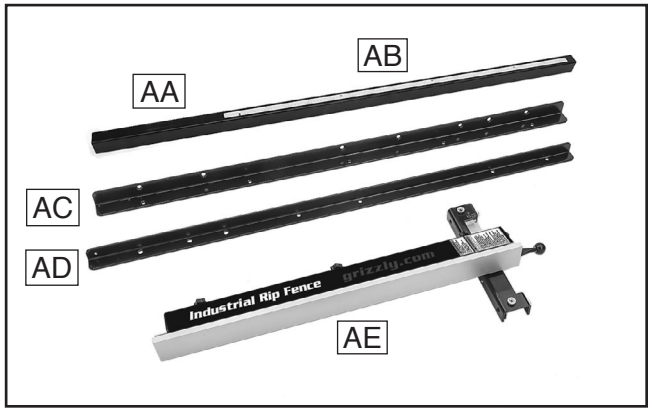

Figure 12. Inventory needed to install fence on Model G0899.

Fasteners (Not Shown) **Qty**

AF. Cap Screws M10-1.5 x 30 (Wing/Table) 6
AG. Lock Washers 10mm (Wing/Table) 6
AH. Flat Washers 10mm (Wing/Table) 6
AI. Hex Bolts M10-1.5 x 25 (Front Rail/Table) 2
AJ. Hex Bolts M10-1.5 x 35 (Front Rail/Wings) 2
AK. Lock Washers 10mm (Front Rail/Table) 4
AL. Flat Washers 10mm (Front Rail/Table/Wings) 6
AM. Hex Nuts M10-1.5 (Front Rail/Table/Wings) 2
AN. Hex Bolts ¼"-20 x ⅝" (Front Rail/Tube) 5
AO. Lock Washers 6mm (Front Rail/Tube) 5
AP. Flat Washers 6mm (Front Rail/Tube) 5
AQ. Hex Bolts M10-1.5 x 25 (Rear Rail/Table) 2
AR. Flat Washers 10mm (Rear Rail/Table) 2
AS. Lock Washers 10mm (Rear Rail/Table) 2
AT. Hex Bolts M10-1.5 x 35 (Rear Rail/Wings) 2
AU. Flat Washers 10mm (Rear Rail/Wings) 4
AV. Lock Washers 10mm (Rear Rail/Wings) 2
AW. Hex Nuts M10-1.5 (Rear Rail/Wings) 2
AX. Flat Head Screws M6-1 x 15 (Switch) 2
AY. Lock Washers 6mm (Switch) 2
AZ. Flat Washers 6mm (Switch) 2
BA. Hex Nut M6-1 (Switch) 2
BB. Wing Nut M6-1 (Dust Hose Support) 1
BC. Flat Washer 6mm (Dust Hose Support) 1
BD. Hex Nut M6-1 (Dust Hose Support) 1
BE. Button Head Cap Screws M5-.8 x 12 (Dust Port) 4
BF. Flat Washers 6mm (Dust Port) 4
BG. Lock Washer 6mm (Dust Hose Support) 1

Measuring Hardware

Use this page to understand how hardware is measured in this manual.

Bolts & Screws

Most bolts and screws are measured by the outside diameter of the threads, thread pitch, and the length from under the head to the opposite end:

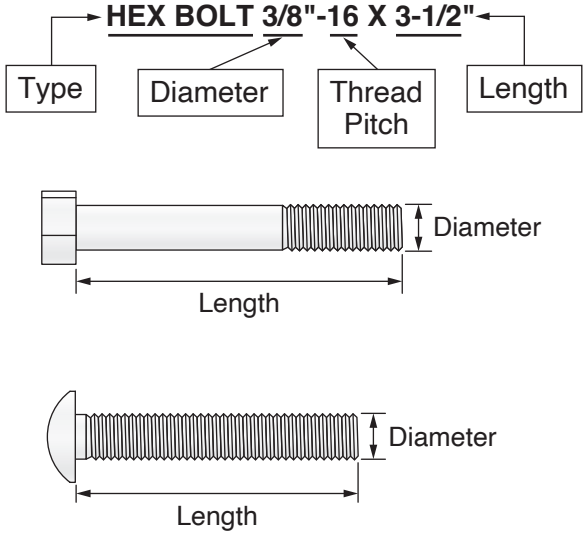

Flat Head & Set Screws

Flat head and set screws are measured by the outside diameter of the threads, thread pitch, and overall length of the fastener. These fasteners are often meant to sit flush with the adjoining surface:

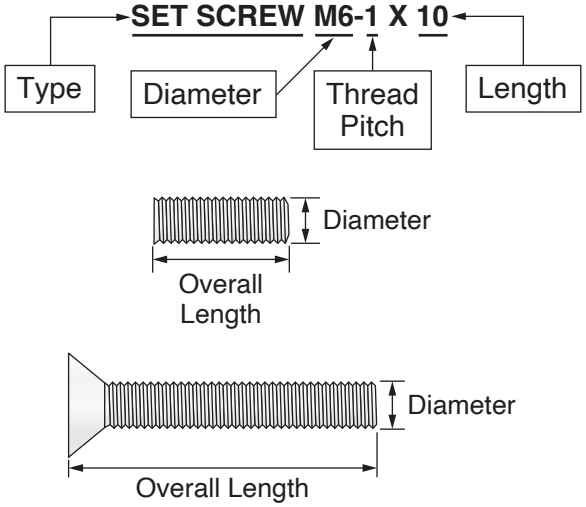

Thread pitch is the distance from the tip of one thread to the tip of the next thread. For US Standard threads, pitch is measured in threads per inch (TPI). Metric thread pitch is the length of one complete thread.

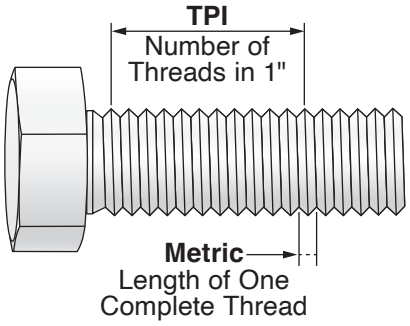

Note: *Grizzly Industrial does not typically list a thread pitch for thread-forming screws and bolts, such as tap screws, wood screws, and lag bolts.*

Washers

Common washers are measured by their inside diameter.

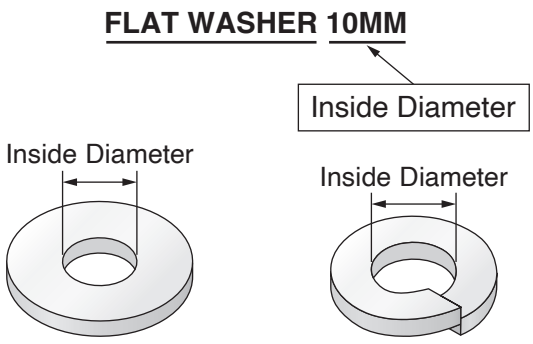

Note: *Specialized washers may list the inside diameter, outside diameter, and the thickness.*

Nuts

Nuts are measured by the inside diameter of the threads and the thread pitch.

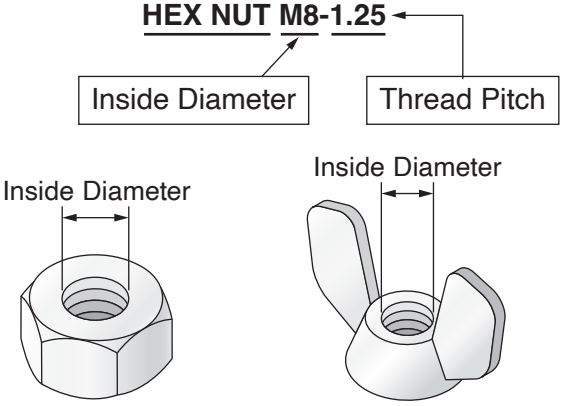

Cleanup

The unpainted surfaces of your machine are coated with a heavy-duty rust preventative that prevents corrosion during shipment and storage. This rust preventative works extremely well, but it will take a little time to clean.

Be patient and do a thorough job cleaning your machine. The time you spend doing this now will give you a better appreciation for the proper care of your machine's unpainted surfaces.

There are many ways to remove this rust preventative, but the following steps work well in a wide variety of situations. Always follow the manufacturer's instructions with any cleaning product you use and make sure you work in a well-ventilated area to minimize exposure to toxic fumes.

Before cleaning, gather the following:
- Disposable rags
- Cleaner/degreaser (WD•40 works well)
- Safety glasses & disposable gloves
- Plastic paint scraper (optional)

Basic steps for removing rust preventative:

1. Put on safety glasses.

2. Coat the rust preventative with a liberal amount of cleaner/degreaser, then let it soak for 5–10 minutes.

3. Wipe off the surfaces. If your cleaner/degreaser is effective, the rust preventative will wipe off easily. If you have a plastic paint scraper, scrape off as much as you can first, then wipe off the rest with the rag.

4. Repeat **Steps 2–3** as necessary until clean, then coat all unpainted surfaces with a quality metal protectant to prevent rust.



⚠WARNING

Gasoline and petroleum products have low flash points and can explode or cause fire if used to clean machinery. Avoid using these products to clean machinery.

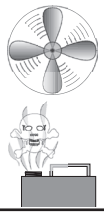

⚠CAUTION

Many cleaning solvents are toxic if inhaled. Only work in a well-ventilated area.

NOTICE

Avoid harsh solvents like acetone or brake parts cleaner that may damage painted surfaces. Always test on a small, inconspicuous location first.

T23692—Orange Power Degreaser
A great product for removing the waxy shipping grease from the ***non-painted*** parts of the machine during clean up.

Order online at
www.grizzly.com
OR
Call 1-800-523-4777



Figure 13. T23692 Orange Power Degreaser.

Site Considerations

Weight Load

Refer to the **Machine Data Sheet** for the weight of your machine. Make sure that the surface upon which the machine is placed will bear the weight of the machine, additional equipment that may be installed on the machine, and the heaviest workpiece that will be used. Additionally, consider the weight of the operator and any dynamic loading that may occur when operating the machine.

Space Allocation

Consider the largest size of workpiece that will be processed through this machine and provide enough space around the machine for adequate operator material handling or the installation of auxiliary equipment. With permanent installations, leave enough space around the machine to open or remove doors/covers as required by the maintenance and service described in this manual. **See below for required space allocation.**

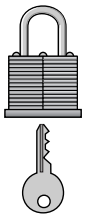

⚠CAUTION

Children or untrained people may be seriously injured by this machine. Only install in an access restricted location.

Physical Environment

The physical environment where the machine is operated is important for safe operation and longevity of machine components. For best results, operate this machine in a dry environment that is free from excessive moisture, hazardous chemicals, airborne abrasives, or extreme conditions. Extreme conditions for this type of machinery are generally those where the ambient temperature range exceeds 41°–104°F; the relative humidity range exceeds 20%–95% (non-condensing); or the environment is subject to vibration, shocks, or bumps.

Electrical Installation

Place this machine near an existing power source. Make sure all power cords are protected from traffic, material handling, moisture, chemicals, or other hazards. Make sure to leave enough space around machine to disconnect power supply or apply a lockout/tagout device, if required.

Lighting

Lighting around the machine must be adequate enough that operations can be performed safely. Shadows, glare, or strobe effects that may distract or impede the operator must be eliminated.

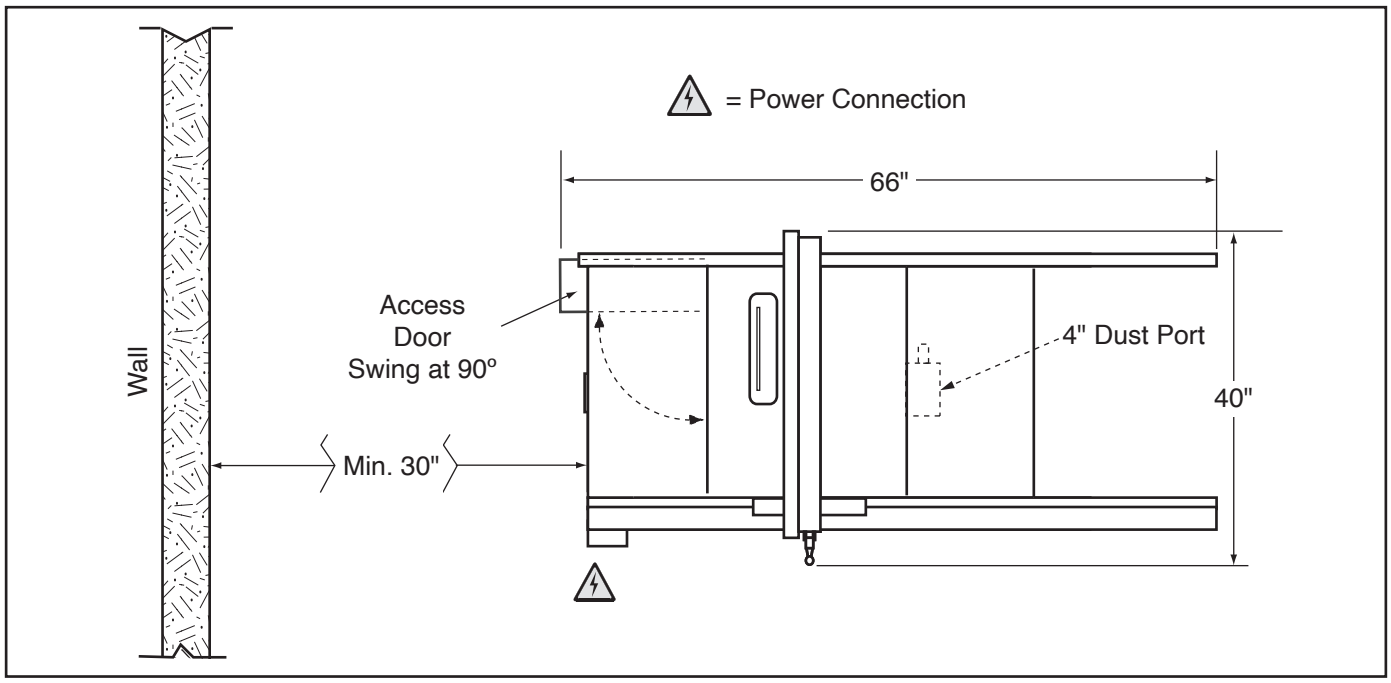

Figure 14. Minimum working clearances.

Assembly

The machine must be fully assembled before it can be operated. Before beginning the assembly process, refer to **Needed for Setup** and gather all listed items. To ensure the assembly process goes smoothly, first clean any parts that are covered or coated in heavy-duty rust preventative (if applicable).

To assemble table saw:

1. Thoroughly clean heavy-duty rust preventative off of gearing inside the saw and coat these with appropriate metal protectant (refer to **Lubrication** on **Page 61** for location of gears).

2. Slide groove on back of each handwheel over handwheel shaft pin, as shown in **Figure 15**.

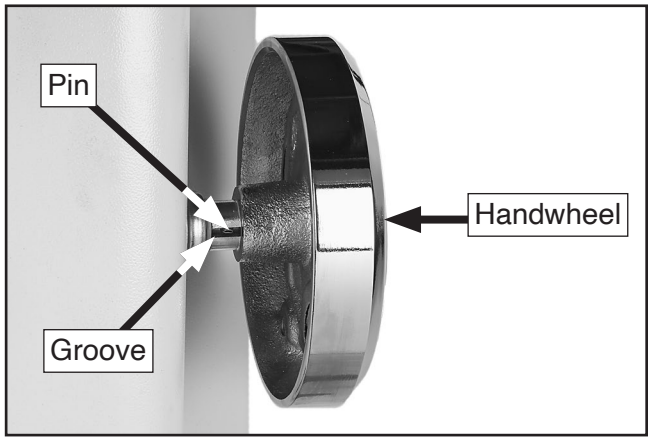

Figure 15. Handwheel installed on shaft pin.

3. Thread handwheel lock knob into center of each handwheel and tighten, then thread handle onto each handwheel and tighten (see **Figure 16**).

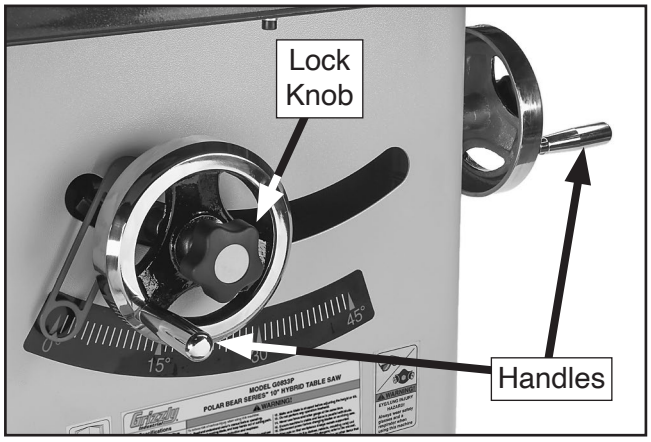

Figure 16. Handwheel installed.

4. Raise motor with blade height handwheel and remove foam shipping block (see **Figure 17**). Save block for later machine transport (if necessary).

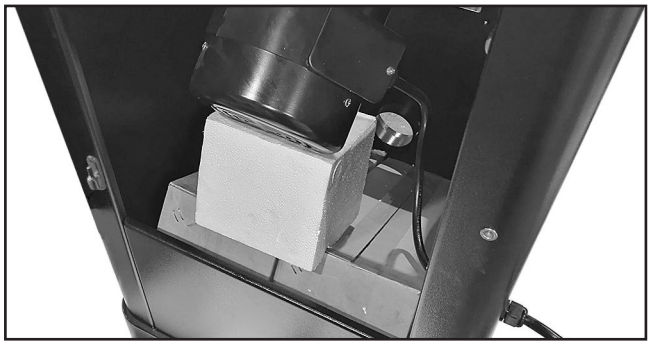

Figure 17. Foam shipping block location.

5. Remove switch from inside saw cabinet, and install motor door by inserting door pins into hinge sockets on cabinet (see **Figure 18**).



Figure 18. Motor door installed.

6. Inspect extension wings and main table mating surfaces for burrs or foreign materials that may inhibit assembly.

   For a correct fit, mating edges of table and wings must be clean, smooth, and flat. If necessary, use a wire brush or file to remove any flashing, dings, or high spots.

7. While an assistant holds wings in place, attach each extension wing to main table with (3) M10-1.5 x 30 cap screws, 10mm lock washers, and 10mm flat washers, as shown in **Figure 19**.

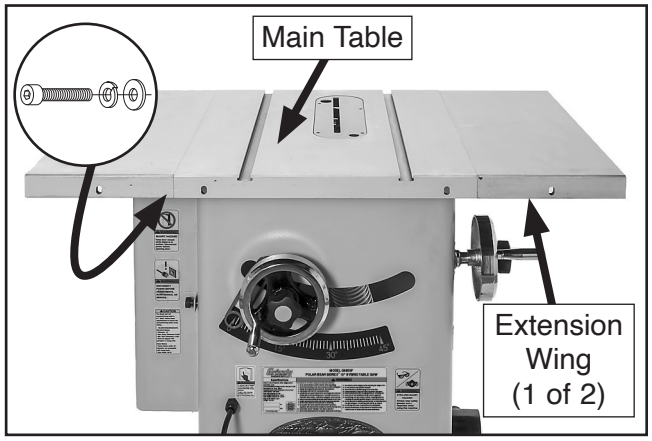

Figure 19. Extension wings installed.

8. Place straightedge across extension wings and main table to make sure that combined table surface is flat.

   — If combined table surface is flat, skip to next step.

   — If outside end of extension wing tilts down, place a strip of masking tape along bottom edge of main table to shim end of extension wing up (see **Figure 20**).

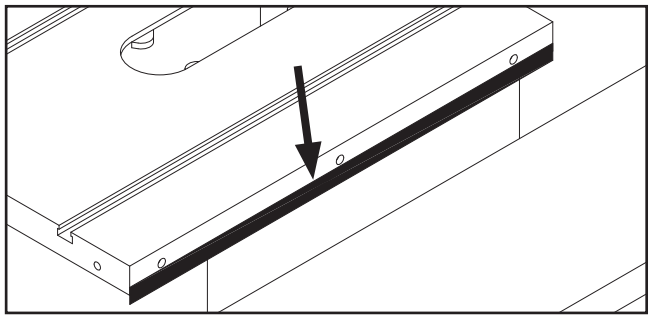

Figure 20. Masking tape location for tilting extension wing up.

   — If outside end of extension wing tilts up, place strip of masking tape along top edge of main table to shim end of extension wing down (see **Figure 21**).

Note: *After re-installing wings, remove all excess masking tape with a razor blade.*

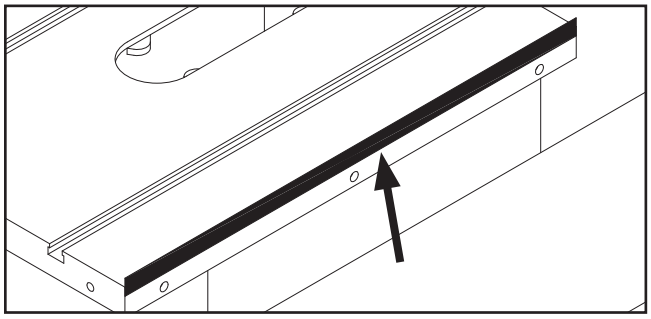

Figure 21. Masking tape location for adjusting the extension wing down.

9. Attach front rail to table with (2) M10-1.5 x 25 hex bolts, (2) 10mm lock washers, and (2) 10mm flat washers, as shown in **Figure 22**. Finger tighten fasteners for now.

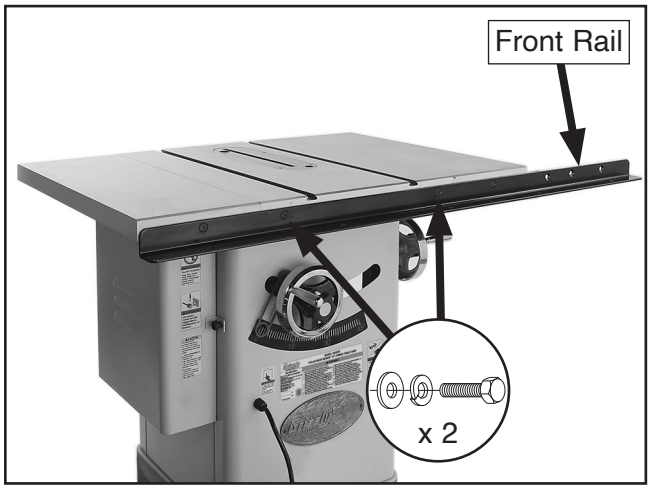

Figure 22. Front rail attached to table.

10. Attach front rail to extension wings with (2) M10-1.5 x 35 hex bolts, (4) 10mm flat washers, (2) 10mm lock washers, and (2) M10-1.5 hex nuts as shown in **Figure 23**. Finger tighten fasteners.

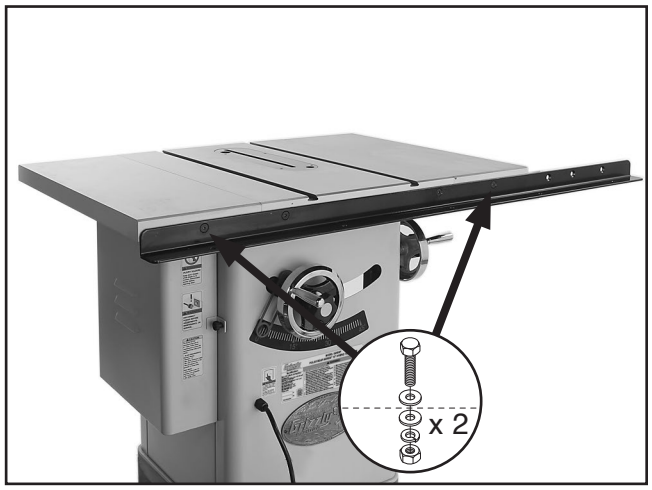

Figure 23. Front rail attached to extension wings.

11. Make sure top of rail is parallel with table top, then tighten fasteners installed in **Steps 9 & 10.**

12. Install front rail tube onto front rail with (5) ¼-20 x ⅝ hex bolts, 6mm flat washers, and 6mm lock washers (see **Figure 24**). Finger-tighten fasteners.

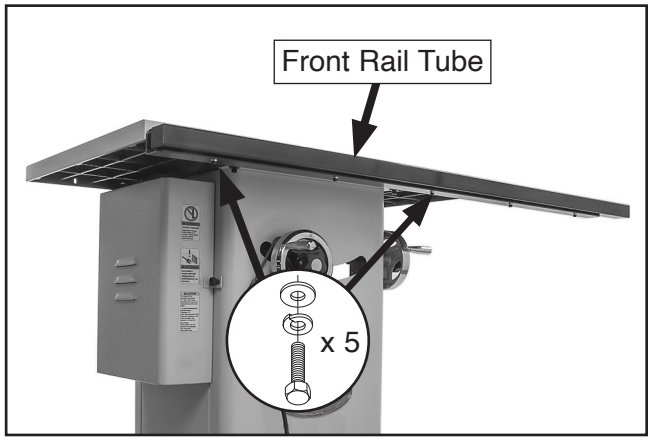

Figure 24. Front rail tube attached to front rail.

13. While standing at front of table, pull rail tube toward you as far as possible, then tighten fasteners installed in **Step 12**. This will help make sure there is enough room for fence to slide.

14. Attach rear rail to main table using (2) M10-1.5 x 25 hex bolts, 10mm lock washers, and 10mm flat washers, as shown in **Figure 25**. Check to make sure rear rail is parallel to table and below miter slots before completely tightening hex bolts.

15. Secure rear rail to extension wings with (2) M10-1.5 x 35 hex bolts, (4) 10mm flat washers, (2) 10mm lock washers, and (2) M10-1.5 hex nuts (see **Figure 25**).

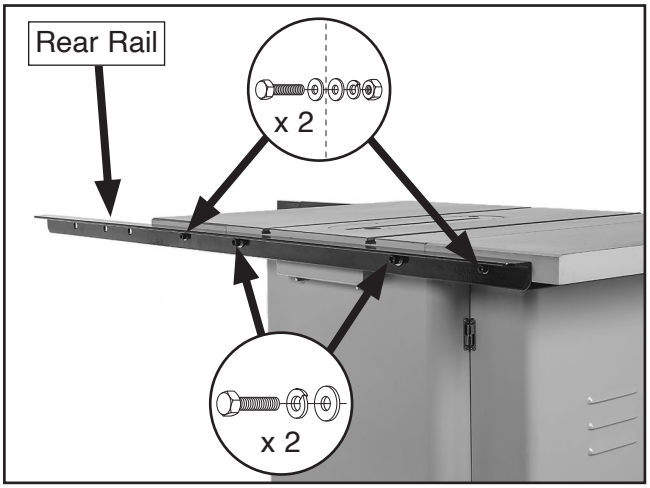

Figure 25. Rear rail installed.

16. Attach switch to bottom left-hand side of front rail using (2) M6-1 x 15 flat head screws, 6mm lock washers, 6mm flat washers, and M6-1 hex nuts, as shown in **Figure 26**.

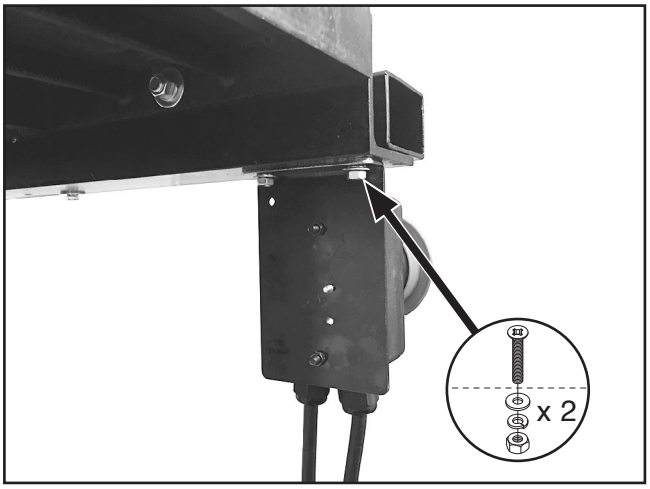

Figure 26. Switch installed.

17. Attach dust hose support arm to rear rail with M6-1 hex nut, 6mm flat washer, 6mm lock washer, and M6-1 wing nut. Orient arm so open end of hook faces outward, as shown in **Figure 27**.

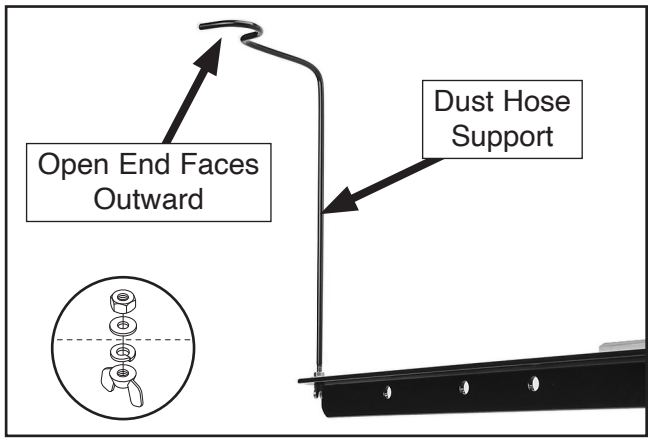

Figure 27. Dust hose support installed.

18. Install saw blade as outlined in **Blade Installation** on **Page 33**.

19. Place fence on rails on right hand side of blade.

Note: *Make sure cam foot contacts cam on fence lock handle before you place fence on rail; otherwise, fence will not lock onto rail tube (see **Figure 28**).*

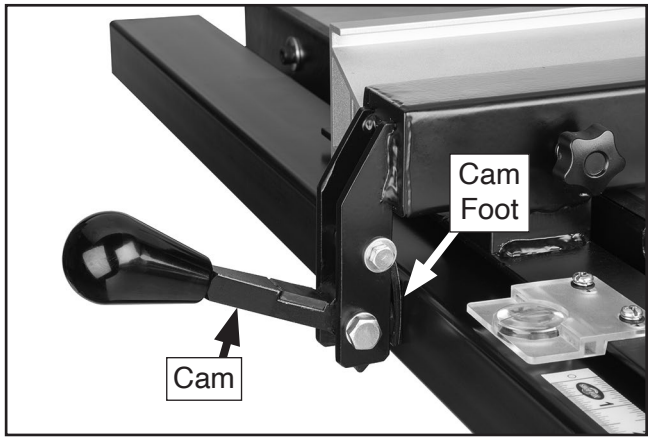

Figure 28. Fence installed on rails.

20. Adjust foot at rear of fence so that gap between fence and table top is even from front to back.

21. Slide fence up against right-hand edge of miter slot, and lock it in place. Examine how fence lines up with miter slot.

Note: *It is permissible for back of fence to pivot outward not more than 1/64" from being parallel with miter slot. This creates a slightly larger opening between fence and blade, at rear of blade, to reduce risk of workpiece binding or burning as it is fed through cut. Many woodworkers intentionally set up their fence in this manner. Keep this in mind before adjusting your fence. For more details, see **Figure 127** on **Page 72**.*

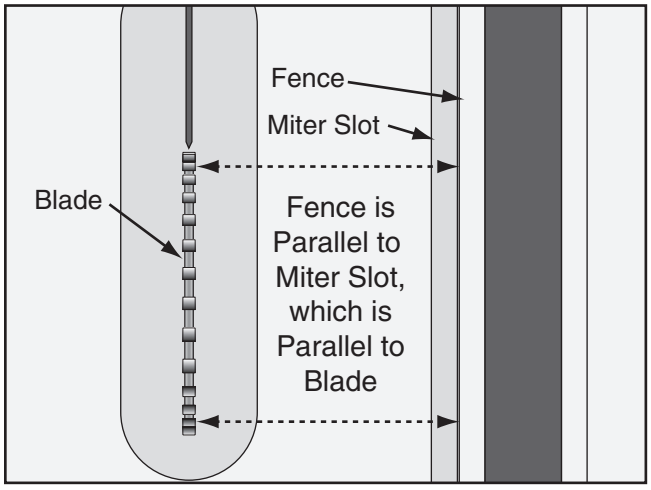

Figure 29. Checking fence parallelism with blade.

— If fence *is* still parallel with miter slot, proceed to **Step 22**.

— If fence *is not* parallel with miter slot, then you MUST adjust fence, as described in **Fence Adjustments** on **Page 70**, so that it is parallel.

— If miter slot *is not* parallel with blade, you must follow procedures described in **Miter Slot to Blade Parallelism** on **Page 66**.

22. Carefully slide fence so it barely touches saw blade and lock it in place.

23. Lightly mark "0" location on fence tube (under indicator line on pointer window) with a pencil, then remove fence.

24. Peel tape from fence scale label and carefully align "0" mark on scale with pencil mark on fence tube, then make sure tape is parallel to fence tube along its length before placing label.

25. Re-install fence, move it over to just touch blade, and verify that indicator line is directly over "0" mark.

—If you need to correct position of indicator line, loosen Phillips head screws on pointer window, adjust pointer window so line is over "0" mark on tape (see **Figure 30**), then tighten screws.

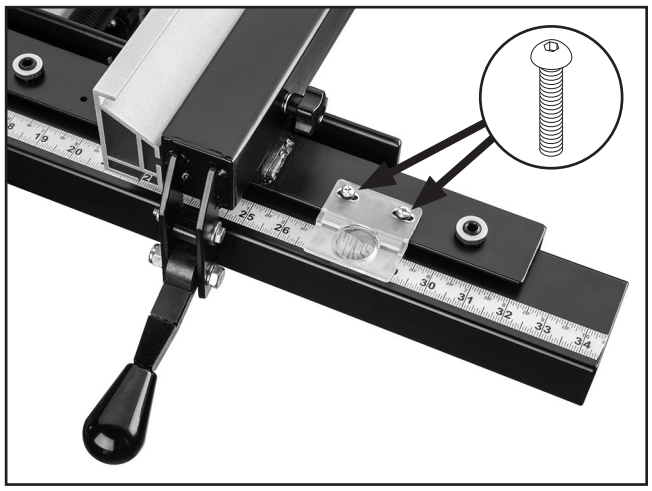

Figure 30. Rail tape aligned with scale pointer.

26. Attach dust port to cabinet using (4) M5-.8 x 12 button head cap screws and (4) 6mm flat washers, as shown in **Figure 31**.

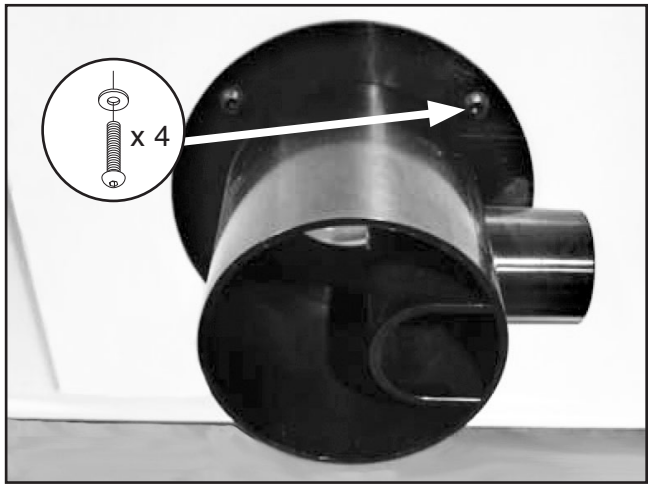

Figure 31. Dust port installed.

27. Place 3¼" hose clamps over each end of 3" dust hose, then attach 3" dust hose to dust chute and dust port inside cabinet (see **Figure 32**).

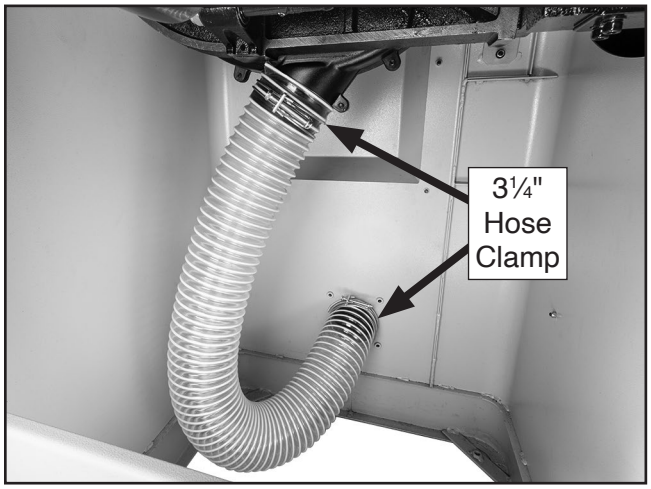

Figure 32. Dust hose connected inside cabinet.

28. Attach cabinet access door to hinges (see **Figure 33**) and secure with hinge pins.

29. Remove (2) hex bolts and flat washers (see **Figure 33**) from right-hand side of cabinet. Close access door and secure with hex bolts and flat washers.

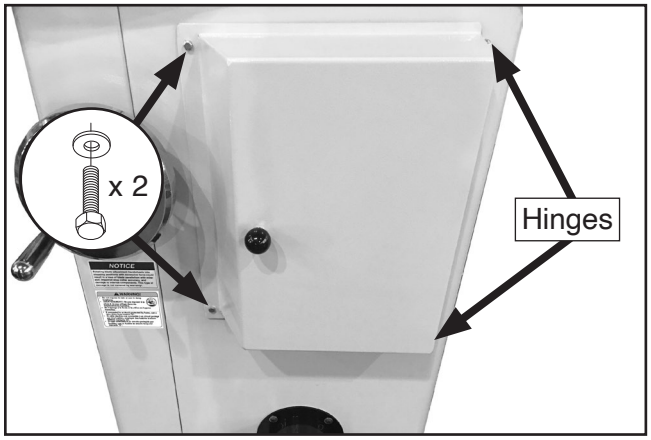

Figure 33. Cabinet access door installed.

30. Install blade guard as outlined on **Page 34.**

31. Attach a dust hose adapter to each end of 1½" dust hose (see **Figure 34**).

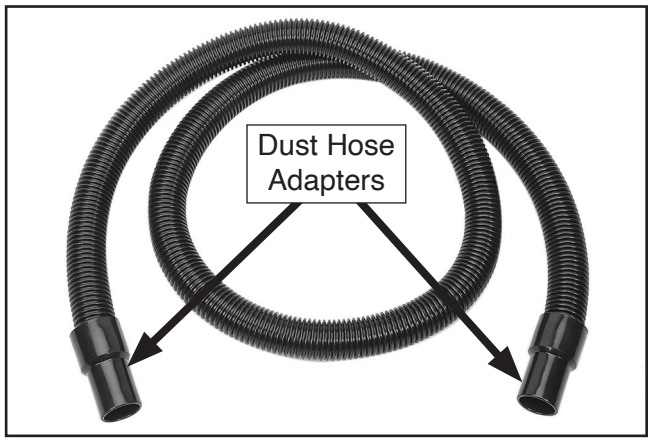

Figure 34. Adapters attached to dust hose.

32. Slide one dust hose adapter onto 1½" dust port (see **Figure 35**), until it fits snugly.

33. Attach 1½" dust hose to dust hose support (see **Figure 35**), then insert dust hose adapter into 1½" dust port at rear of blade guard assembly.

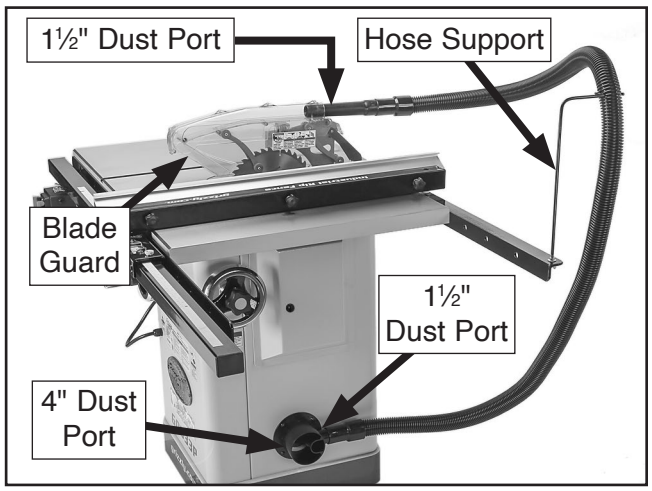

Figure 35. Dust hose attached to saw, hose support, and blade guard dust port.

34. Locate hole in cabinet near bottom left corner of cabinet access door, then open door (see **Figure 36**).

35. Remove (1) ¼"-20 hex nut and (1) 5mm flat washer from push stick hangar (see **Figure 36**), then insert hangar into hole.

36. Thread (1) ¼"-20 hex nut with (1) 5mm flat washer onto end of push stick hangar (see **Figure 36**), then close door.

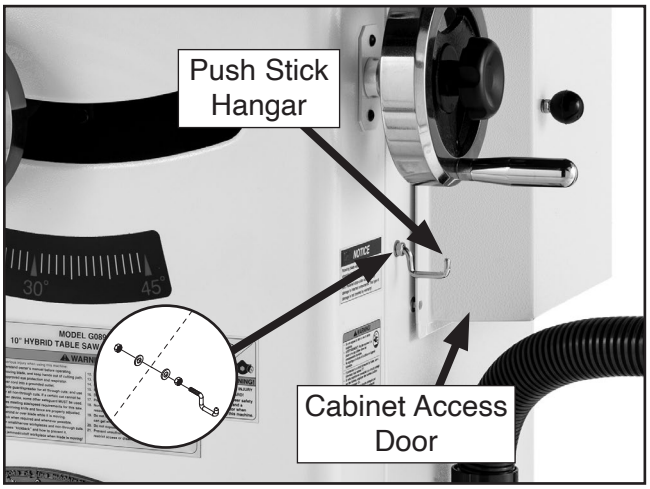

Figure 36. Push stick hangar installed.

Dust Collection

⚠CAUTION

This machine creates a lot of wood chips/dust during operation. Breathing airborne dust on a regular basis can result in permanent respiratory illness. Reduce your risk by wearing a respirator and capturing the dust with a dust-collection system.

Minimum CFM at Dust Port: 400 CFM

Do not confuse this CFM recommendation with the rating of the dust collector. To determine the CFM at the dust port, you must consider these variables: (1) CFM rating of the dust collector, (2) hose type and length between the dust collector and the machine, (3) number of branches or wyes, and (4) amount of other open lines throughout the system. Explaining how to calculate these variables is beyond the scope of this manual. Consult an expert or purchase a good dust collection "how-to" book.

Components Needed:	**Qty**
Dust Hose Adapters 1½"	2
Dust Hose 94" x 1½"	1
Dust Hose 4" (not included)	1
Hose Clamps 4" (not included)	2
Dust Collection System (not included)	1

To connect dust collection system:

1. Fit 4" dust hose over dust port, as shown in **Figure 37**, and tightly secure it in place with a hose clamp.

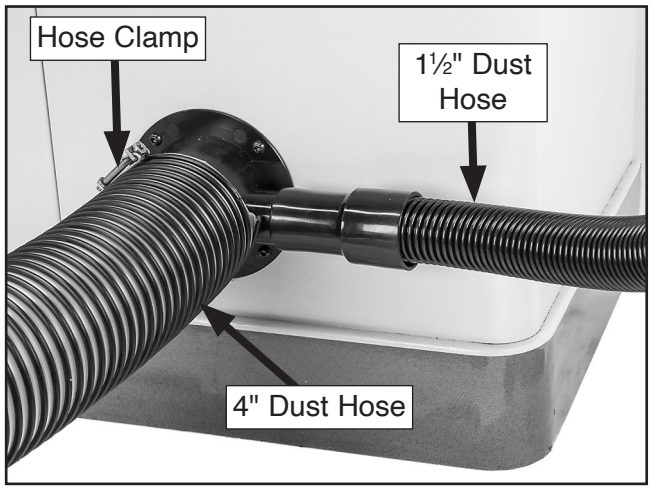

Figure 37. Dust hoses attached to port.

2. Tug hose to make sure it does not come off.

   Note: *A tight fit is necessary for proper performance.*

Test Run

Once assembly is complete, test run the machine to ensure it is properly connected to power and safety components are functioning correctly.

If you find an unusual problem during the test run, immediately stop the machine, disconnect it from power, and fix the problem BEFORE operating the machine again. The **Troubleshooting** table in the **SERVICE** section of this manual can help.

The test run consists of verifying the following: 1) The motor powers up and runs correctly, and 2) the safety disabling mechanism on the switch works correctly.

⚠WARNING

Serious injury or death can result from using this machine BEFORE understanding its controls and related safety information. DO NOT operate, or allow others to operate, machine until the information is understood.

⚠WARNING

DO NOT start machine until all preceding setup instructions have been performed. Operating an improperly set up machine may result in malfunction or unexpected results that can lead to serious injury, death, or machine/property damage.

To test run machine:

1. Lower blade all the way down with handwheel, and make sure all tools and objects used during setup are cleared away from machine.

2. Connect machine to power source.

3. Turn machine ***ON*** by pulling paddle switch out. Verify motor operation, then turn machine ***OFF*** by pressing paddle switch in.

   The motor should run smoothly and without unusual problems or noises.

4. Remove switch disabling key, as shown in **Figure 38**.

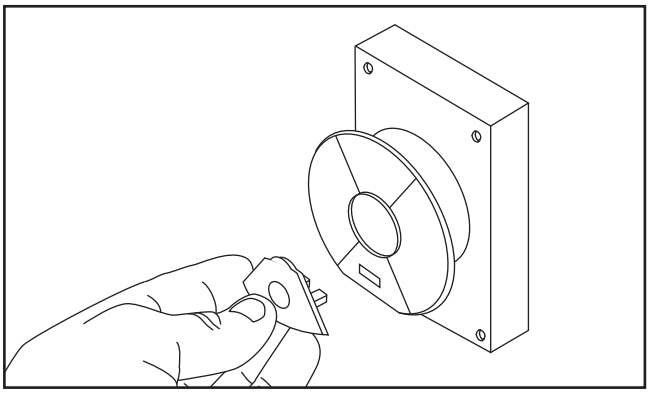

Figure 38. Example of removing disabling key from paddle switch.

5. Try to start machine

   — If machine *does not* start, switch disabling feature is working as designed.

   — If machine *does start*, immediately stop machine. The switch disabling feature is not working correctly. This safety feature must work properly before proceeding with regular operations. Call Tech Support.

SECTION 4: OPERATIONS

Operation Overview

The purpose of this overview is to provide the novice machine operator with a basic understanding of how the machine is used during operation, so the machine controls/components discussed later in this manual are easier to understand.

Due to the generic nature of this overview, it is **not** intended to be an instructional guide. To learn more about specific operations, read this entire manual, seek additional training from experienced machine operators, and do additional research outside of this manual by reading "how-to" books, trade magazines, or websites.

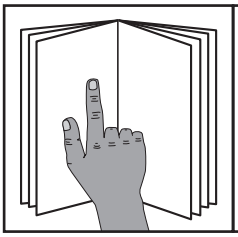

⚠WARNING

To reduce your risk of serious injury, read this entire manual BEFORE using machine.

⚠WARNING

Eye injuries, respiratory problems, or hearing loss can occur while operating this tool. Wear personal protective equipment to reduce your risk from these hazards.



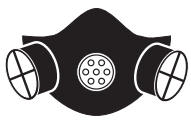



NOTICE

If you are not experienced with this type of machine, WE STRONGLY RECOMMEND that you seek additional training outside of this manual. Read books/magazines or get formal training before beginning any projects. Regardless of the content in this section, Grizzly Industrial will not be held liable for accidents caused by lack of training.

To complete a typical operation, the operator does the following:

1. Examines workpiece to make sure it is suitable for cutting.
2. Adjusts blade tilt, if necessary, to correct angle for desired cut.
3. Adjusts blade height no more than ¼" higher than thickness of workpiece.
4. Adjusts fence to desired width of cut, then locks it in place.
5. Checks outfeed side of machine for proper support and to make sure workpiece can safely pass all the way through blade without interference.
6. Puts on safety glasses, respirator, and hearing protection, and locates push sticks/blocks if needed.
7. Starts saw.
8. Feeds workpiece all the way through blade while maintaining firm pressure on workpiece against table and fence, and keeping hands and fingers out of blade path and away from blade.
9. Stops machine immediately after cut is complete.

Workpiece Inspection

Some workpieces are not safe to cut on this machine or may need to be modified before they can be safely cut. **Before cutting, insepct all workpieces for the following:**

- ***Material Type:*** This machine is intended for cutting natural and man-made wood products, laminate-covered wood products, and some plastics. Cutting drywall or cementitious backer board creates extremely fine dust and may reduce the life of the motor bearings. This machine is NOT designed to cut metal, glass, stone, tile, etc.; cutting these materials with a table saw greatly increases the risk of injury and damage to the saw or blade.

- ***Foreign Objects:*** Nails, staples, dirt, rocks and other foreign objects are often embedded in wood. While cutting, these objects can become dislodged and hit the operator, cause kickback, or break the blade, which might then fly apart. Always visually inspect your workpiece for these items. If they cannot be removed, DO NOT cut the workpiece.

- ***Large/Loose Knots:*** Loose knots can become dislodged during the cutting operation. Large knots can cause kickback and machine damage. Choose workpieces that do not have large/loose knots or plan ahead to avoid cutting through them.

- ***Wet or "Green" Stock:*** Cutting wood with a moisture content over 20% causes unnecessary wear on the blades, increases the risk of kickback, and yields poor results.

- ***Excessive Warping:*** Workpieces with excessive cupping, bowing, or twisting are dangerous to cut because they are unstable and may move unpredictably when being cut.

- ***Minor Warping:*** Slightly cupped workpieces can be safely supported with cupped side facing the table or fence; however, workpieces supported on the bowed side will rock during the cut, which could cause kickback.

Non-Through & Through Cuts

Non-Through Cuts

A non-through cut is a sawing operation where the blade does not protrude above the top face of the wood stock, as shown in the **Figure** below.

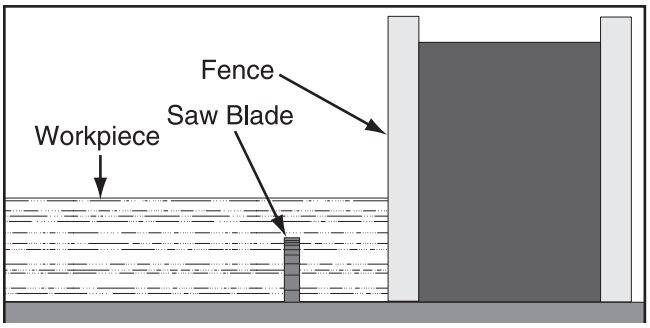

Figure 39. Example of a non-through cut.

Examples of non-through cuts include dadoes and rabbets. Non-through cuts have a higher risk of injury from kickback because the blade guard must be removed. However, when making these cuts with a standard blade, the riving knife MUST be installed because it still provides some protection.

IMPORTANT: When making non-through cuts with a dado blade, the riving knife MUST be removed. Do not attempt to cut the full depth in one pass. Instead, take multiple light passes to reduce the load on the blade.

Through Cuts

A through cut is a sawing operation in which the workpiece is completely sawn through, as shown in the **Figure** below. Examples of through cuts are rip cuts, cross cuts, miter cuts, and beveled cuts. The blade guard assembly MUST be used when performing through cuts.

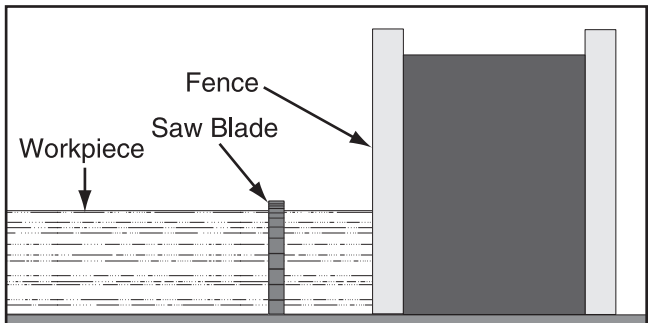

Figure 40. Example of a through cut (blade guard not shown for illustrative clarity).

Blade Requirements

When choosing a main blade, make sure the blade size meets the requirements listed below. The thickness of the blade body and teeth can be measured with calipers or any precision measuring device.

Blade Size Requirements:

- Body Thickness: 0.063"–0.094" (1.8-2.4mm)
- Kerf (Tooth) Thickness: 0.102"–0.126" (2.6-3.2mm)
- Riving Knife Thickness: 0.1" (2.5mm)
- Blade Size Required for Riving Knife: 10"

Blade Selection

This section on blade selection is by no means comprehensive. Always follow the saw blade manufacturer's recommendations to ensure safe and efficient operation of your table saw.

Ripping Blade Features:

- Best for cutting with the grain
- 20-40 teeth
- Flat-top ground tooth profile
- Large gullets for large chip removal

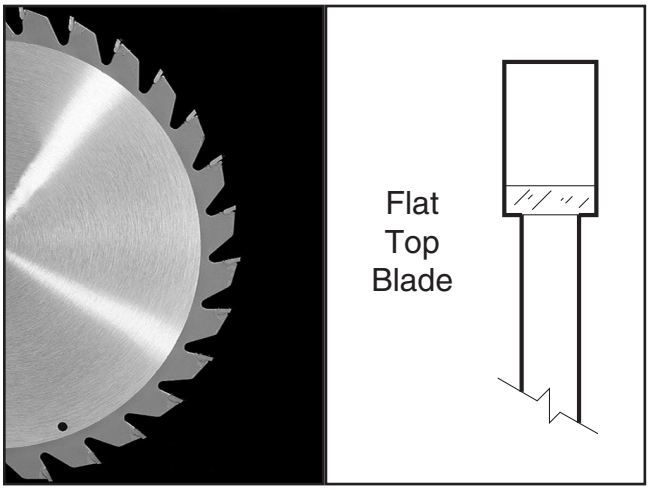

Figure 41. Ripping blade.

Crosscut Blade Features:

- Best for cutting across the grain
- 60-80 teeth
- Alternate top bevel tooth profile
- Small hook angle and a shallow gullet

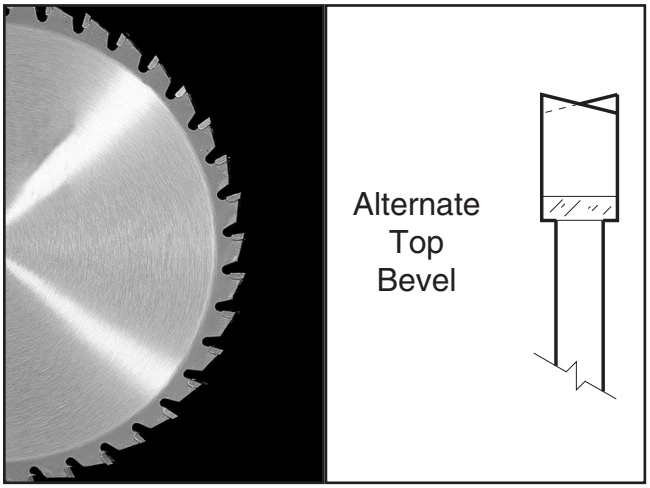

Figure 42. Crosscutting blade.

Combination Blade Features:

- Designed to cut both with and across grain
- 40-50 teeth
- Alternate top bevel and flat, or alternate top bevel and raker tooth profile
- Teeth are arranged in groups
- Gullets are small and shallow (similar to a cross-cut blade), then large and deep (similar to a ripping blade

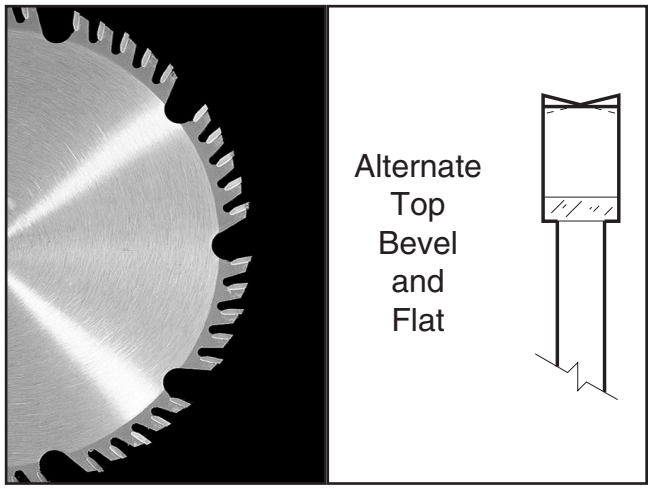

Figure 43. Combination blade.

Laminate Blade Features:

- Best for cutting plywood or veneer
- 40-80 teeth
- Triple chvip tooth profile
- Very shallow gullet

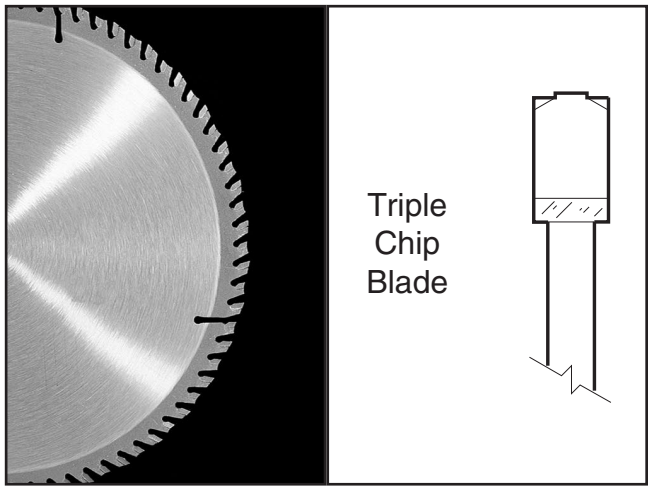

Figure 44. Laminate blade.

Thin Kerf Blade: A blade with thinner kerf than a standard blade. Since the spreader/riving knife included with this table saw is sized for standard blades, thin kerf blades cannot be used on this saw unless they meet the **Blade Requirements** specified in this manual, or unless a thin-kerf riving knife is installed in place of a standard riving knife; otherwise, they will increase the risk of kickback.

Dado Blades

Wobble Dado Blade: A single blade mounted at a slight angle on an arbor hub. The blade angle is adjustable on the hub, and the width of the dado cut is controlled by the angle setting of the blade.

Stacked Dado Blade (see below): Multiple blades are stacked together to control the cutting width. Stacked dado blades are more expensive than wobble blades, but typically produce higher quality results.

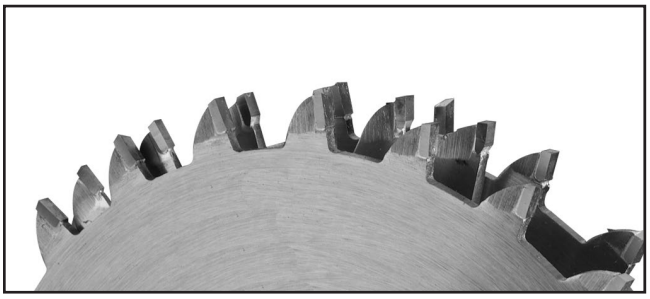

Figure 45. Stacked dado blade.

Blade Installation

Review this section, even if your saw blade came pre-installed.

To install blade:

1. DISCONNECT MACHINE FROM POWER!

2. Raise arbor all the way up with handwheel, then remove blade guard, spreader/riving knife, and table insert if they are installed on machine.

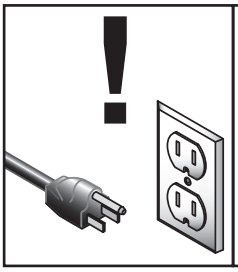

⚠WARNING

To reduce risk of shock or accidental startup, always disconnect machine from power before adjustments, maintenance, or service.

⚠CAUTION

Before proceeding with the next step, wear gloves to protect your hands while handling and installing the blade.

3. Push arbor lock (see **Figure 46**) in and turn blade until it locks in place.

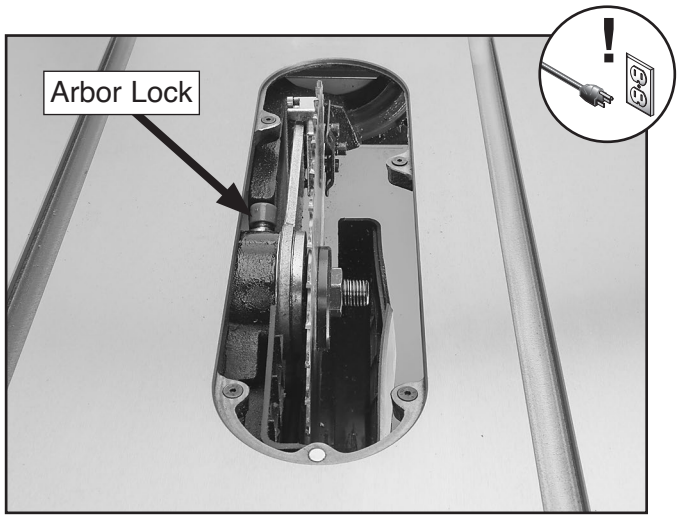

Figure 46. Location of arbor lock.

4. While pressing arbor lock, use included arbor wrench to loosen and remove arbor nut, flange, and blade (see **Figure 47**). Arbor nut has right-hand threads; rotate counterclockwise to loosen.



Figure 47. Example of removing table saw blade.

5. Install new blade, flange, and arbor nut on arbor, as shown in **Figure 48**, with upper teeth facing front of saw. Ensure the tapered edge of the flange faces the arbor nut and the recess faces away from the arbor nut (see **Figure 49**). The arbor nut should be flush with the outer surface of the flange.

   IMPORTANT: Make sure you install the components in the correct orientation or the saw blade will not be properly secured!

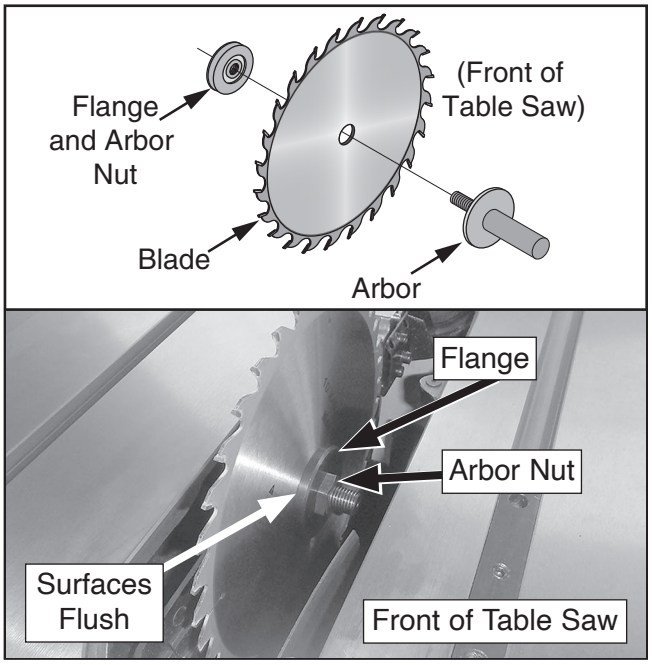

Figure 48. Blade order of installation and teeth facing correct direction.

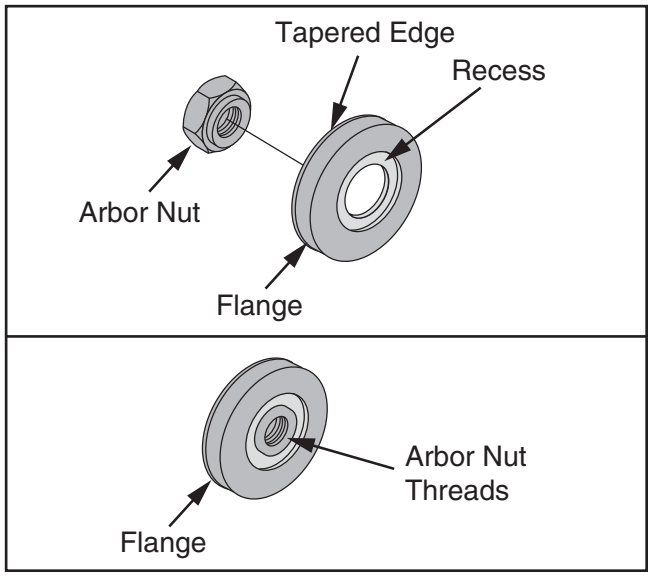

Figure 49. Flange and arbor nut joined.

6. Secure blade with arbor lock, then tighten flange and arbor nut against blade with arbor wrench. DO NOT overtighten.

7. Re-install table insert (see **Page 74**) and blade guard (see **Figure 50**) or riving knife (see **Page 38**).

Blade Guard Assembly

The term "blade guard" refers to the assembly that consists of the clear polycarbonate shield and dust enclosure, the spreader, and the anti-kickback pawls on each side of the spreader (see **Figure 50**). Each of these components have important safety functions during the operation of the saw.

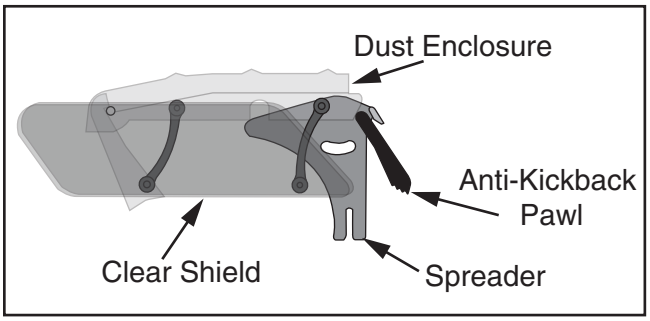

Figure 50. Blade guard assembly components.

Guard

The clear polycarbonate guard allows the operator to see the blade cut the workpiece during operation. This guard is designed to lift as the workpiece is pushed into the blade and remain in contact with the workpiece throughout the entire cut.

The guard reduces injury risk by providing a barrier around the blade that prevents accidental contact and contains flying wood chips.

To ensure that the guard does its job effectively, the guard must always be in the downward position against the table during idle operation, and the hinge mechanism must be maintained in good working condition so the guard can freely pivot up and down to accommodate the height of the workpiece and return to the table surface.

Spreader

The spreader is a metal plate that prevents the newly cut kerf of the workpiece from pinching the backside of the blade and causing kickback.

The spreader also acts as a barrier behind the blade to shield hands from being pulled into the blade if a kickback occurs.

⚠CAUTION

In order to work properly, the spreader cannot be bent or misaligned with the blade. If the spreader gets accidentally bent, take the time to straighten it or just replace it. Using a bent or misaligned spreader will increase the risk of kickback! See Page 68 to check or adjust alignment if necessary.

Installing Blade Guard Assembly

Tools Needed	Qty
Hex Wrench 3mm	1
Straightedge	1

To install blade guard assembly:

1. DISCONNECT MACHINE FROM POWER!

2. Slide end of spreader between adjustment block and clamping plate. Press firmly until spreader snaps into place (see **Figure 51**).

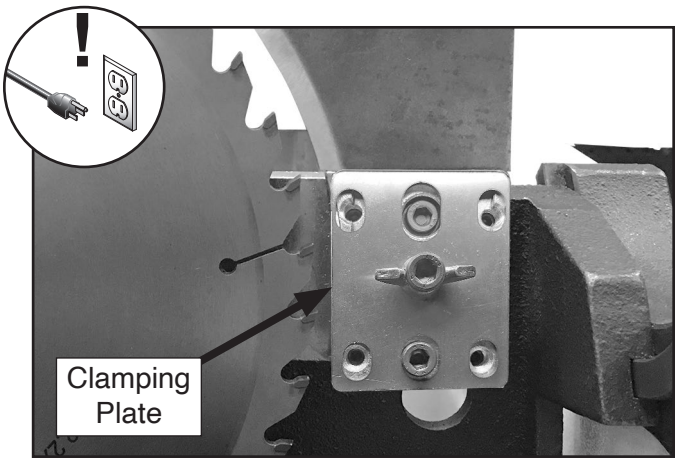

Figure 51. Spreader held between clamping plate and adjustment block.

3. Adjust flat head cap screws (see **Figure 52**) to make sure table insert is flush with table (use a straightedge as a guide).

Note: *The blade guard, when properly installed, should be set up similarly to* ***Figure 52****. It should pivot freely up and down and return to the table in the resting position. It should also swing up high enough to accommodate the workpiece.*

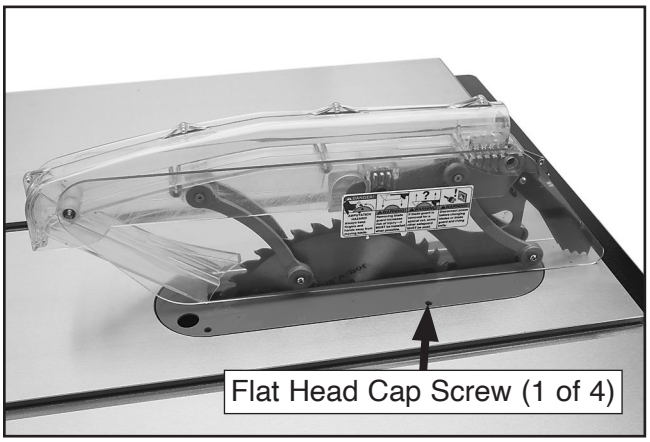

Figure 52. Blade guard installed.

4. While lifting up on one side of blade guard and right spreader pawl, place straightedge against blade and spreader, making sure straightedge *does not* touch a blade tooth.

   When properly aligned, spreader/riving knife will be in "Alignment Zone," shown in **Figure 53**, and will be parallel with blade.

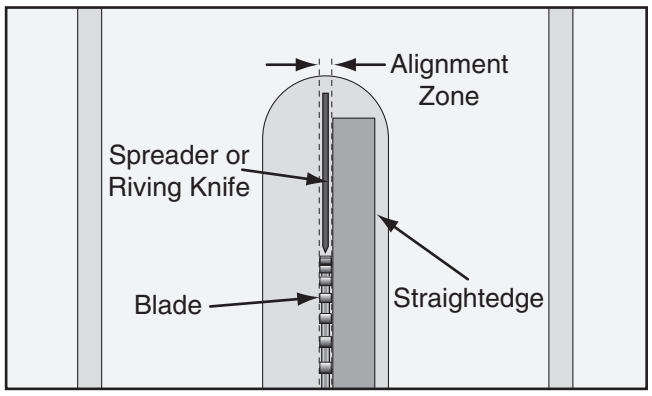

Figure 53. Spreader/riving knife alignment zone.

   — If spreader/riving knife is not inside alignment zone and not parallel with blade, then it needs to be adjusted. Proceed to **Adjusting Alignment** on **Page 69**.

5 . Connect dust collection hose to blade guard as shown in **Figure 54.** For more information, see **Dust Collection** on **Page 27**.

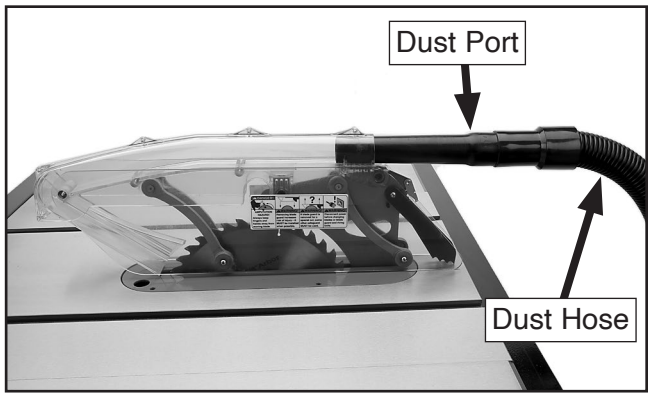

Figure 54. Dust port and dust collection hose installed on blade guard.

Anti-Kickback Pawls

The anti-kickback pawls allow the workpiece to travel in only one direction. If the workpiece moves backwards, such as during a kickback, the pawls will dig into the workpiece to slow or stop it.

To work properly, the pawls must return to their resting position after pivoting, as shown in **Figure 55**, and they must NOT be engaged in the arresting hooks.

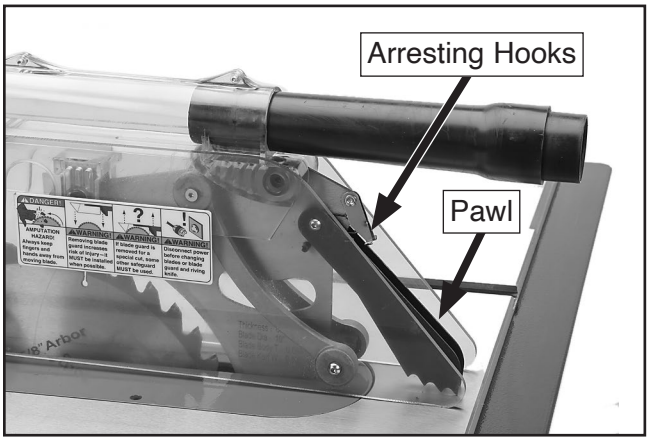

Figure 55. Pawls in resting position.

If the pawls fail to return to the resting position, the pivot area may need to be cleaned or the spring may have been dislodged or broken and will need to be fixed/replaced.

Disabling Pawls

You might disable the pawls if you are concerned about them scratching a delicate workpiece, or if you believe that they will obstruct a narrow workpiece and cause feeding difficulty or loss of control. Use your best judgment before retracting the pawls, as they are provided for your safety.

⚠CAUTION

We do not recommend disabling pawls during normal operations unless absolutely necessary. In most situations, disabling pawls will increase your risk of serious personal injury in event of a kickback. Do not remove pawls from spreader.

⚠CAUTION

The pawls are sharp and can lacerate fingers or hands. Use caution, and wear leather gloves when handling the pawls to reduce risk of injury.

To disable pawls:

1. DISCONNECT MACHINE FROM POWER!

2. Rotate one or both arresting hooks downward, then place pawls on each of the hooks, as shown in **Figure 56**.

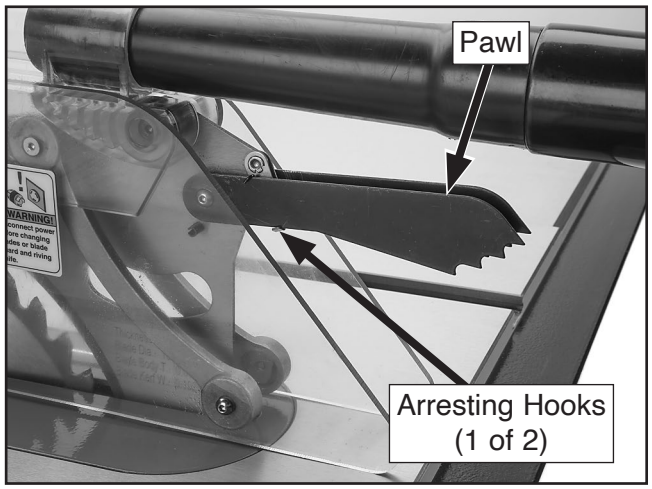

Figure 56. Pawls disabled.

Enabling Pawls

To enable the pawls, lift up on each pawl and move them outward and down until they both touch the table surface, as shown in **Figure 55** on **Page 36**.

When to Use the Blade Guard

The blade guard assembly MUST always be installed on the saw for all normal through cuts (those where the blade cuts all the way through the thickness of the workpiece). If the blade guard is removed for specific operations, always immediately replace it after those operations are complete.

When Not to Use the Blade Guard

The blade guard cannot be used on any non-through cuts (those in which the blade does not cut all the way through the thickness of the workpiece).

IMPORTANT: Whenever the blade guard cannot be used, the riving knife must be installed.

Sometimes the blade guard or its components can get in the way when cutting very narrow workpieces or other specialized cuts. Because the blade guard is provided to decrease your risk of injury, it should not be used if it gets in the way of making a safe cut. Use good judgment!

Riving Knife

The riving knife works in the same manner as the spreader on the blade guard assembly. It is a metal plate that prevents the newly cut workpiece from pinching the backside of the blade and causing kickback.

The key difference between the spreader and the riving knife is that the riving knife mounts below the blade's highest point of rotation, as shown in **Figure 57**.

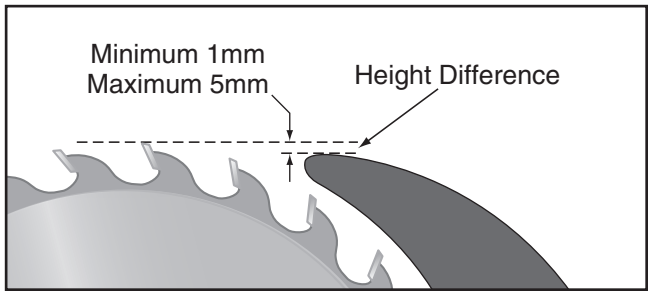

Figure 57. Height difference between riving knife and blade.

The height difference between the riving knife and the blade allows the workpiece to pass over the blade during non-through cuts (those in which the blade does not cut all the way through the thickness of the workpiece).

The riving knife acts as a barrier behind the blade to reduce the risk of hands being pulled into the blade if a kickback occurs.

The riving knife must be kept within the range shown in **Figure 58**. For that reason, we only recommend using a 10" blade for operations that require use of the riving knife.

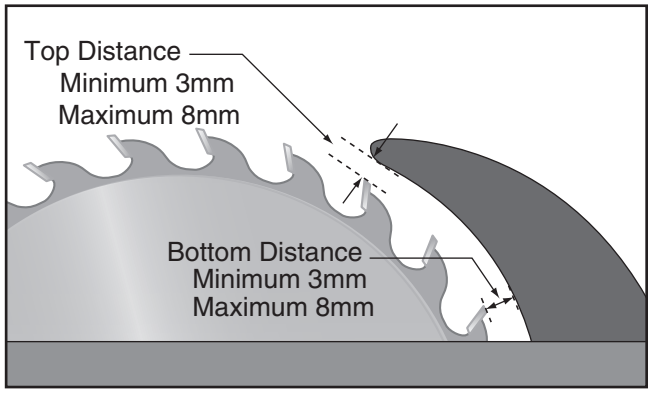

Figure 58. Allowable riving knife clearance.

⚠CAUTION

To ensure that riving knife works safely, it MUST be aligned with and correctly adjusted to blade. Refer to Page 68 to check or adjust riving knife alignment.

How to Install the Riving Knife

The riving knife is installed in a similar manner to the blade guard and spreader. Refer to **Blade Guard Assembly** on **Page 34** for installation instructions.

When to Use the Riving Knife

Use the riving knife for all non-through cuts made with a standard table saw blade (i.e., dadoes or rabbet cuts, and when using a tenoning jig).

Also, use the riving knife for those special operations where the blade guard or its components get in the way of safe operation, such as with very narrow cuts.

When Not to Use the Riving Knife

Do not use the riving knife with a dado blade. In addition, although it is possible to use the riving knife for through cutting operations, the blade guard assembly offers far more injury protection and risk reduction than the riving knife. Therefore, **we strongly recommend** that you use the blade guard assembly for through cuts.

Ripping

"Ripping" means cutting with the grain of a natural wood workpiece. In man-made materials such as MDF or plywood, ripping means cutting lengthwise.

⚠CAUTION

Serious injury can be caused by kickback. Kickback is a high-speed ejection of stock from table saw toward an operator. The operator or bystanders may be struck by flying stock, or operator's hands can be pulled into blade during kickback.

To make a rip cut:

1. Review **Preventing Kickback** on **Page 12** and take necessary precautions to reduce likelihood of kickback.

2. If using natural wood, joint one long edge of workpiece on a jointer.

3. DISCONNECT MACHINE FROM POWER!

4. Ensure that blade guard/spreader is installed.

5. Loosen fence knobs (see **Figure 59**), remove rip fence, then re-install in vertical position for normal cutting operations, or in horizontal position for cutting narrow workpieces. Lift fence up and tighten each fence knob.

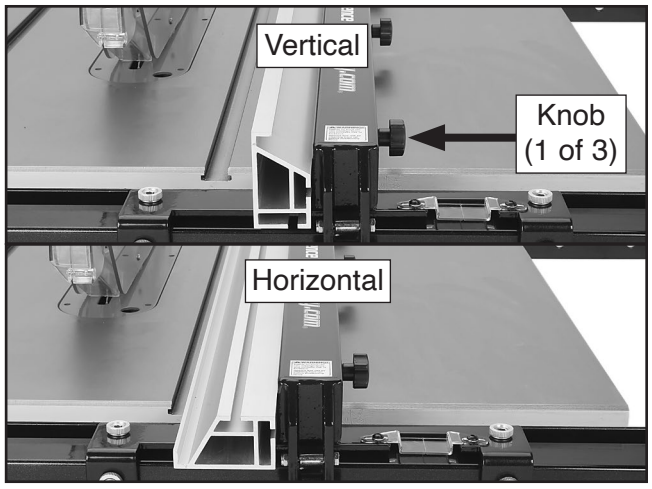

Figure 59. Example rip fence positions.

6. Set fence to desired width of cut on scale.

7. Adjust blade height so highest saw tooth protrudes no more than ¼" above workpiece.

8. Set up safety devices such as featherboards or other anti-kickback devices, making sure no safety devices are contacting blade.

9. Plug saw into power source, turn it ***ON***, and allow it to reach full speed.

   Note: *Jointed edge of workpiece must slide against fence during cutting operation.*

10. Use push stick to feed workpiece through saw blade, as shown in **Figure 60**, until workpiece is completely beyond saw blade.

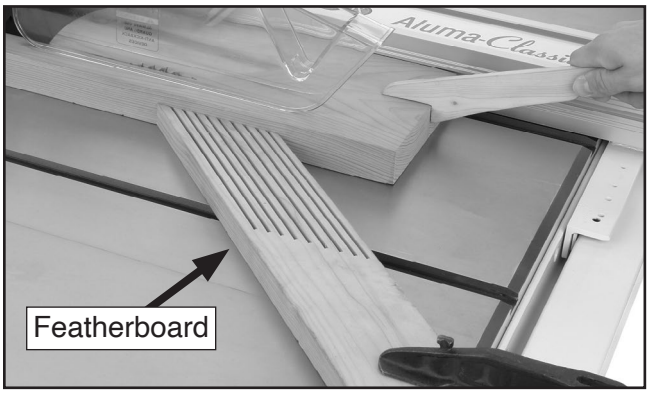

Figure 60. Typical ripping operation.

⚠WARNING

Turn saw *OFF* and allow blade to come to a complete stop before removing cutoff piece. Failure to follow this warning could result in severe lacerations or amputation.

⚠WARNING

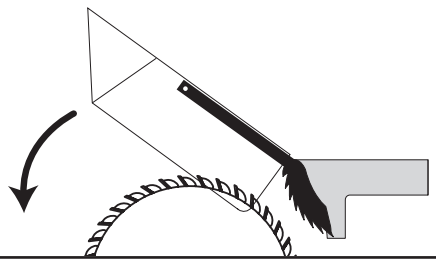

Keep blade guard installed and in down position. Failure to do this could result in serious personal injury or death.

Crosscutting

"Crosscutting" means cutting across the grain of a natural wood workpiece, usually with a miter saw. In other man-made materials, such as MDF or plywood, crosscutting means cutting across the width of the workpiece.

To make a crosscut using miter gauge:

1. DISCONNECT MACHINE FROM POWER!
2. Ensure that blade guard/spreader is installed.
3. To avoid kickback, move rip fence aside and position miter gauge, adjusted to 90°, in a miter slot.
4. Adjust blade height so teeth protrude no more than ¼" above workpiece.
5. Slide miter gauge near blade and adjust workpiece so blade will cut on waste side of line.
6. Plug in table saw, turn it ***ON,*** and allow it to reach full speed.
7. Hold workpiece firmly against face of miter gauge (see **Figure 61**), and ease it through blade until workpiece is completely past saw blade.

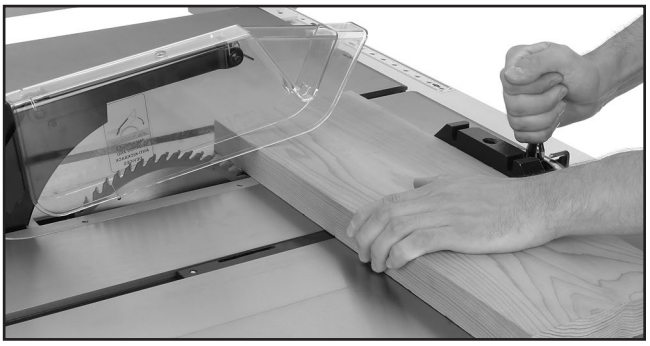

Figure 61. Typical crosscutting operation.

⚠WARNING

Turn saw *OFF* and allow blade to come to a complete stop before removing cutoff piece. Failure to follow this warning could result in severe lacerations or amputation.

Miter Cuts

A miter is an angled crosscut. Miters are usually cut in the same manner as crosscuts, using the miter gauge and a predetermined mark on the workpiece.

To perform a miter cut:

1. DISCONNECT MACHINE FROM POWER!
2. Ensure that blade guard/spreader is installed.
3. Determine angle of cut. If angle needs to be very precise, use a protractor to set miter gauge to blade.
4. Place face of miter gauge against edge of workpiece and place bar across face of workpiece. Use bar as a guide to mark your cut, as shown in **Figure 62**.

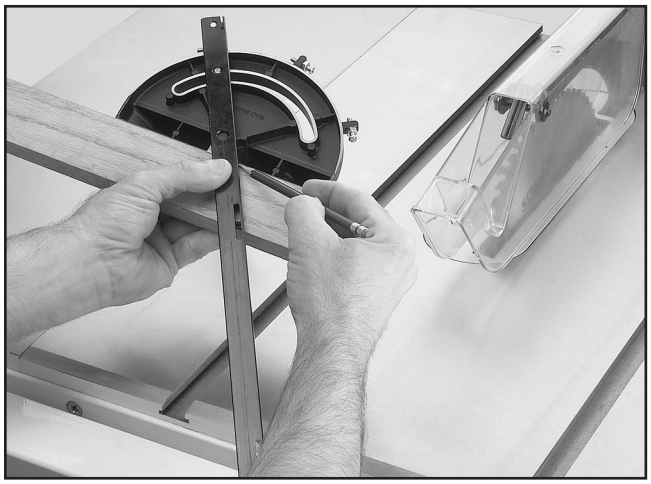

Figure 62. Example of marking miter line.

5. Place miter gauge back into slot and hold workpiece firmly against miter gauge body. Slide miter gauge near blade and adjust workpiece so blade will cut on waste side of line.
6. Proceed to make cut in same manner as described in **Crosscutting** instructions.

Blade Tilt/Bevel Cuts

When the blade tilt collar bolts are properly adjusted (as described starting on **Page 64**), the blade tilt handwheel allows the operator to tilt the blade to the left, between 0° and 45°. This is used most often when cutting bevels, compound miters, or chamfers. **Figure 63** shows an example of the blade when tilted to 45°.

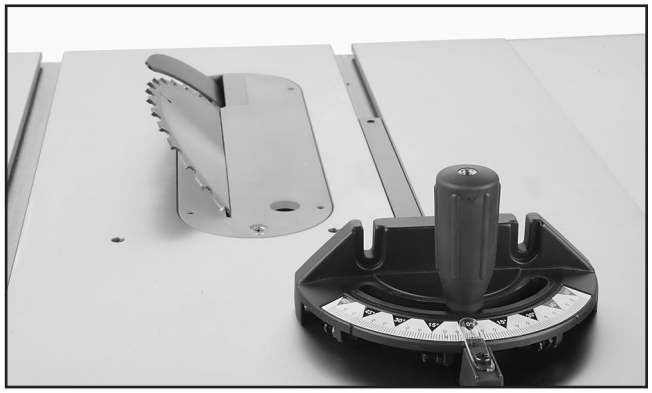

Figure 63. Example of blade tilted to 45° for bevel cutting (blade guard only removed for clarity.

Dado Cutting

Commonly used in furniture joinery, a dado is a straight channel cut in the face of the workpiece. Dadoes are "non-through" cuts that can be made with a dado blade or a standard saw blade. The **Figure** below shows a cutaway view of a dado cut being made with a dado blade.

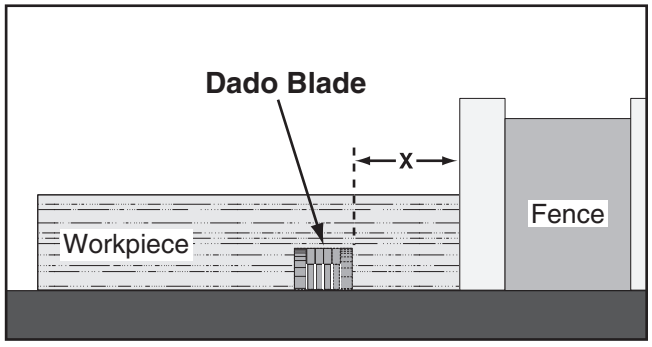

Figure 64. Example of a dado being cut with a dado blade.

The Model G0899 uses dado blades up to 8" in diameter. When using a dado blade, DO NOT install the riving knife.

Installing a Dado Blade

1. DISCONNECT MACHINE FROM POWER!
2. Remove table insert, blade guard assembly or riving knife, arbor nut, flange, and saw blade.
3. Attach and adjust 8" dado blade according to dado blade manufacturer's instructions, and secure with included dado blade flange and arbor nut.
4. Install dado table insert.

⚠WARNING

DO NOT make through cuts with a dado blade. The extra width of a dado blade will increase the risk of kickback during a through cut. Dado blades are only intended for non-through cuts. Failure to heed this warning could result in serious injury.

⚠WARNING

Never try to cut a warped board by holding it down against the table. If kickback occurs, your hand could be pulled into the blade, resulting in accidental contact with the rotating blade, causing severe lacerations or amputation.

Cutting Dadoes with a Dado Blade

Because dado blades are much wider than standard blades, they place a greater amount of force against the workpiece when cutting. This additional force increases the risk of kickback, requiring the operator to take additional steps when cutting to keep their injury risk at an acceptable level.

⚠WARNING

Dado blades have a higher risk of kickback than normal blades because their larger size applies stronger forces to the workpiece. This risk increases relative to the depth and width of the cut. To minimize your risk of serious personal injury, ensure that stock is flat and straight, and make multiple light cuts (rather than one deep cut) to achieve the desired cutting depth.

The **Figure** below demonstrates the sequential process of making multiple, light cuts that get progressively deeper. The actual number of cuts used should be determined by workpiece hardness, total dado depth, and feed rate. In general, if you hear the motor slow down during the cut, you are cutting too deep or feeding too fast. Slow down!

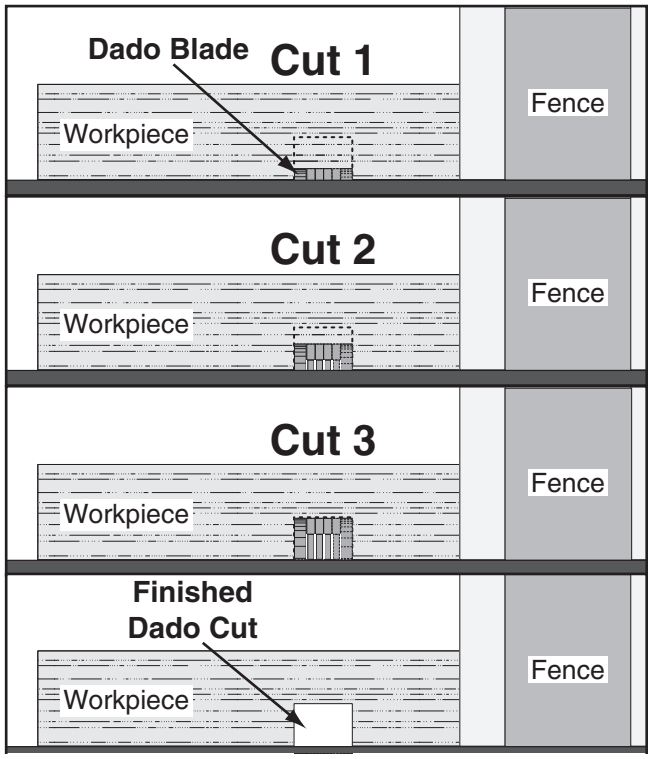

Figure 65. Example of dado being cut with multiple light cuts, instead of one deep cut.

To cut a dado with a dado blade:

1. DISCONNECT MACHINE FROM POWER!
2. Install 8" dado blade and dado insert.
3. Adjust dado blade to desired depth of cut.
4. Adjust distance between fence and inside edge of blade, as shown in **Figure 64** on **Page 41,** to dado length of a workpiece.
   - If dadoing across workpiece, use miter gauge and carefully line up desired cut with dado blade. To reduce kickback, DO NOT use fence in combination with miter gauge.
5. Connect saw to power source.
6. Turn saw ***ON***. Blade should run smoothly, with no vibrations.
7. When blade has reached full speed, perform test cut with scrap piece of wood.
8. If cut is satisfactory, repeat cut with actual workpiece.

Cutting Dadoes with a Standard Blade

A ripping blade (described on **Page 39**) is typically the best blade to use when cutting dadoes with a standard blade because it removes sawdust very efficiently.

To use a standard saw blade to cut dadoes:

1. DISCONNECT MACHINE FROM POWER!
2. Install 10" standard blade, riving knife (see **Riving Knife** on **Page 38**), and table insert.
3. Mark width of dado cut on workpiece. Include marks on edge of workpiece so cut path can be aligned when workpiece is lying on table.
4. Raise blade up to desired depth of cut (depth of dado channel desired).
5. Set saw up for type of cut you need to make, depending on whether it is a rip cut (see **Page 39**) or crosscut (see **Page 40**).

6. Align blade to cut one side of dado, as shown in **Figure 66**.

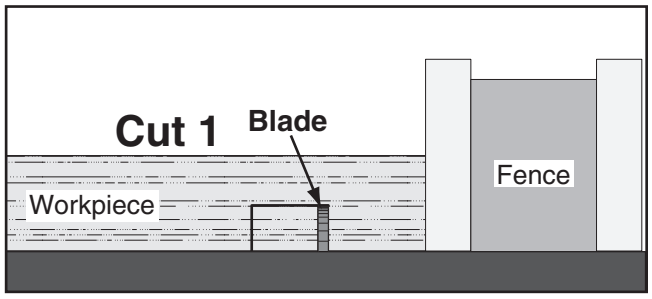

Figure 66. First cut for a single-blade dado.

7. Reconnect saw to power source and turn saw ***ON***. Allow blade to reach full speed, then perform cutting operation.

8. Repeat cutting operation on other side of dado, as shown in **Figure 67**.

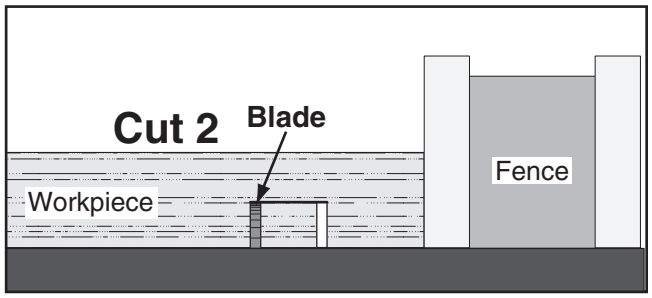

Figure 67. Second cut for a single-blade dado.

9. Make additional cuts (see **Figure 68**) in center of dado to clear out necessary material. Dado is complete when channel is completely cleared out.

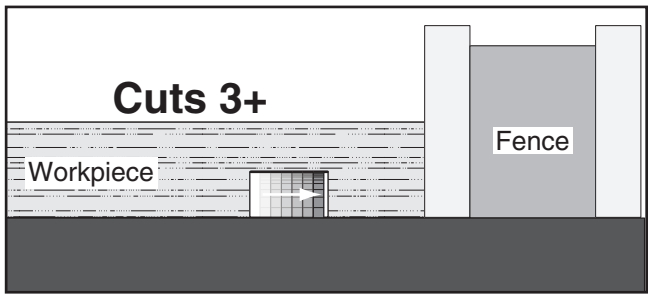

Figure 68. Additional single-blade dado cuts.

Rabbet Cutting

Commonly used in furniture joinery, a rabbet is an L-shaped groove cut in the edge of the workpiece. Rabbets can be cut with either a dado blade or a standard saw blade.

Rabbet cutting on the edge of the workpiece with a dado blade requires a sacrificial fence (see **Figure 69**). Make the sacrificial fence the same length as the fence and ¾" thick. Attach it to the fence with screws or clamps, making sure they are all secure and tight. Raise the blade into the sacrificial fence to the height needed.

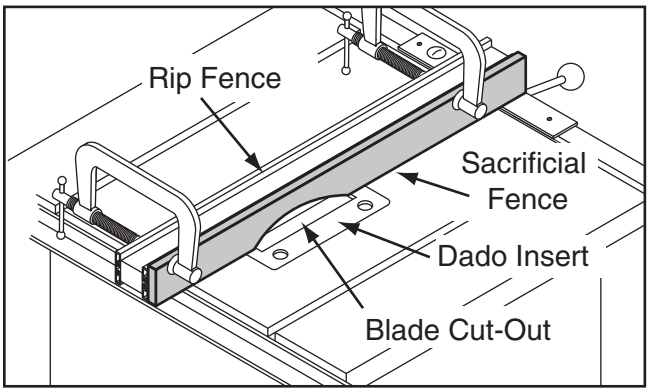

Figure 69. Example of sacrificial fence.

When using a dado blade, the included dado table insert must be installed and used during rabbeting operations.

⚠WARNING

Dado blades have a higher risk of kickback than normal blades because their larger size applies stronger forces to the workpiece. This risk increases relative to the depth and width of the cut. To minimize your risk of serious personal injury, ensure that stock is flat and straight, and make multiple light cuts (rather than one deep cut) to achieve the desired cutting depth.

⚠CAUTION

Always use push sticks, featherboards, push paddles and other safety accessories whenever possible to increase safety and control during operations which require that blade guard be removed from saw. ALWAYS replace blade guard after dadoing is complete.

Cutting Rabbets with a Dado Blade

1. DISCONNECT MACHINE FROM POWER!

2. Adjust dado blade to height needed for rabbeting operation. When cutting deep rabbets, take more than one pass to reduce risk of kickback.

3. Adjust fence and align workpiece to perform cutting operation, as shown in **Figure 70**.

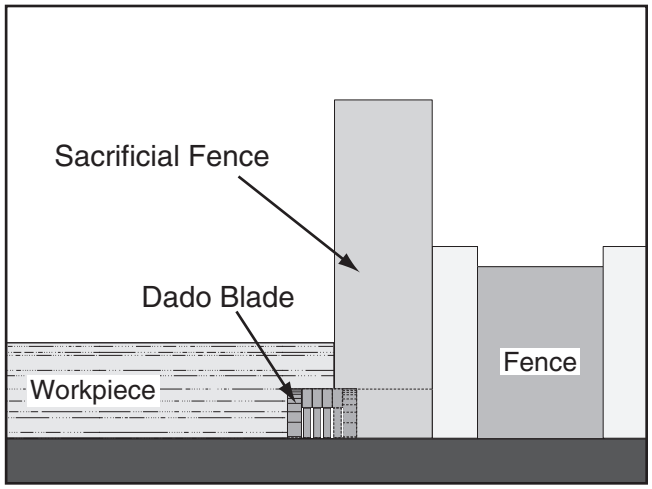

Figure 70. Rabbet cutting.

4. Reconnect saw to power source and turn saw ***ON***. When blade has reached full speed, perform a test cut with a scrap piece of wood.

   — If cut is satisfactory, repeat cut with workpiece.

Cutting Rabbets with a Standard Blade

A ripping blade is typically the best blade to use for cutting rabbets when using a standard blade because it removes sawdust very efficiently. (See **Page 31** for blade details.) Also, a sacrificial fence is not required when cutting rabbets with a standard blade.

To cut rabbets with a standard blade:

1. DISCONNECT MACHINE FROM POWER!

2. Ensure that riving knife and standard table insert are installed.

3. Mark width of rabbet cut on edge of workpiece, so you can clearly identify intended cut while it is laying flat on saw table.

4. Raise blade up to desired depth of cut (depth of rabbet channel desired).

5. Stand workpiece on edge, as shown in **Figure 71**, then adjust fence so blade is aligned with inside of your rabbet channel.

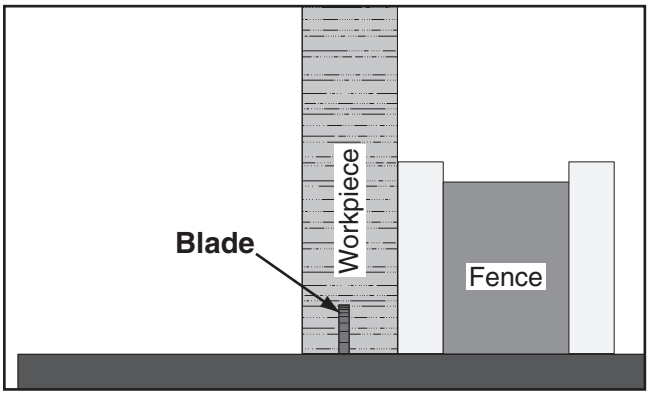

Figure 71. Example of rabbet cutting with a standard blade.

   — If workpiece is very tall, or is unstable when placed against fence, lay it flat on table and use a dado blade to perform rabbet cut.

⚠WARNING

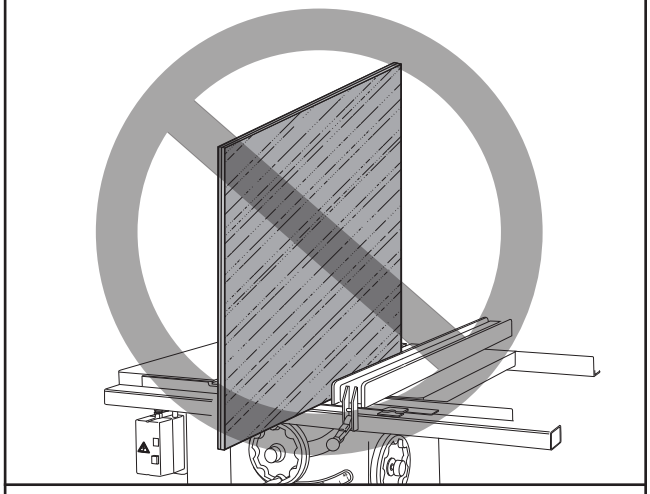

DO NOT place a tall board on edge to perform a rabbet cut with a standard blade. Workpieces that are too tall to properly support with fence can shift during operation and cause kickback. Instead, place stock flat on saw and perform rabbet cut with a dado blade, as instructed on Page 43.

6. Reconnect saw to power source, then perform cut.

7. Lay workpiece flat on table, as shown in **Figure 72**, adjust saw blade height to intersect with first cut, then perform second cut to complete rabbet.

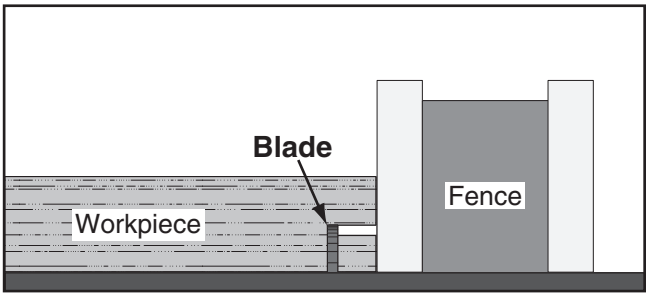

Figure 72. Example of second cut to create a rabbet.

Resawing

⚠CAUTION

Resawing operations require proper procedures to avoid serious injury. Extra care must be taken to prevent kickback when resawing. Any tilting or movement of the workpiece away from the fence will cause kickback. Be certain that stock is flat and straight. Failure to follow these warnings could result in serious personal injury.

Resawing is the process of cutting a thick piece of stock into one or more thinner pieces. Although resawing can be done with a table saw, we strongly recommend that you use a bandsaw instead.

A bandsaw is the ideal machine for resawing, and resawing with one is fairly easy and safe. A table saw is not intended for resawing, and resawing with one is difficult and dangerous due to the increased risk of kickback from binding and deep cuts, and the increased risk of injury from having to remove the guard.

If you insist on resawing with a table saw, DO NOT do so without using a resaw barrier and wearing a full face shield. The following instructions describe how to build a resaw barrier and add an auxiliary fence to your standard fence, to reduce the risk injury from resawing on a table saw.

Note: *To determine the maximum resawing height for this table saw, find the maximum blade height, then double it and subtract ⅛".*

Making Resaw Barrier

When resawing, the resaw barrier acts in tandem with the rip fence to provide tall support for the workpiece. This minimizes the probability of it binding against the blade and causing kickback.

Tools Needed: **Qty**
Table Saw 1
Jointer and Planer ..... Recommended
Clamps ..... 2 Minimum
Drill 1
Drill Bits 1/8", 9/64" ..... 1 Each
Countersink Bit 1

Components Needed for Resaw Barrier:
Wood* 3/4" x 5 1/2" x Length of Fence 1
Wood* 3/4" x 3" x Length of Fence 1
Wood Screws #8 x 2" 4
Wood Glue ..... As Needed

**Only use furniture-grade plywood, kiln-dried hardwood, or HDPE plastic to prevent warping.*

To build a resaw barrier:

1. Cut your wood pieces to size specified above. If you are using hardwood, cut pieces oversize, then joint and plane them to correct size to make sure they are square and flat.

2. Pre-drill and countersink (4) holes approximately 3/8" from bottom of 5 1/2" tall wood piece.

3. Glue end of 3" board, clamp boards at a 90° angle with larger board in vertical position, as shown in **Figure 73**, then fasten together with wood screws.

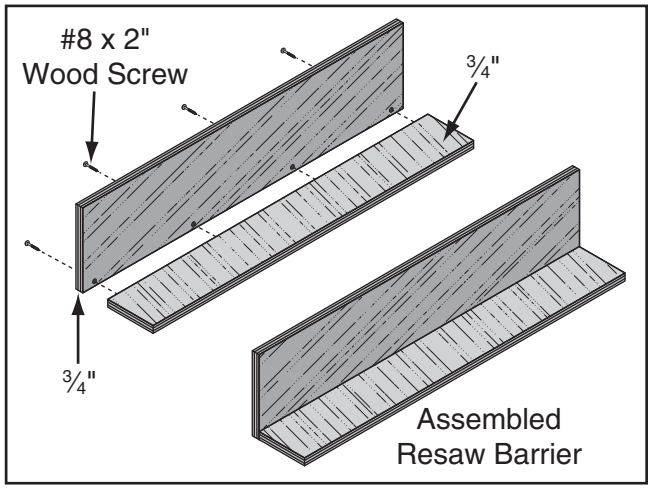

Figure 73. Resaw barrier.

Making Auxiliary Fence

An auxiliary fence is necessary if you are resawing a workpiece that is taller than it is wide. The fence should be no less than 1/2" shorter than the board to be resawn.

The fence should be similar to the one in **Figure 74** when installed.

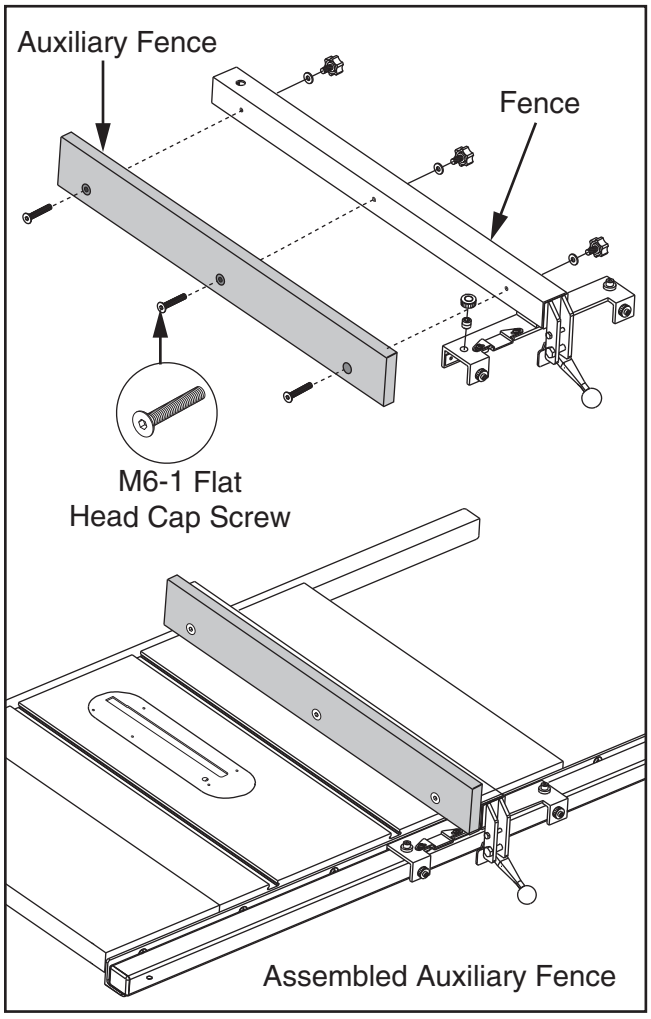

Figure 74. Example of auxiliary fence attached to Model G0899 fence face.

Tools Needed: **Qty**
Clamps 2
Drill 1
Drill Bit 7/32" 1
Countersink Drill Bit 1
Hex Wrench 5mm 1
Ruler 1

Components Needed:

Flat Head Cap Screws M6-1 x (Auxiliary Fence Width + Fence Tube Width)..... 3
Wood* ¾" x 4" x Length of Fence..... 1

**Only use furniture-grade plywood, kiln-dried hardwood, or HDPE plastic to prevent warping.*

To build an auxiliary fence:

1. Cut auxiliary fence board to size. If you are using hardwood, cut board oversize, then joint and plane board to correct size to make sure board is square and flat.

2. Unthread (3) knobs and (3) flat washers securing fence face to fence tube shown in **Figure 75**, then remove fence.

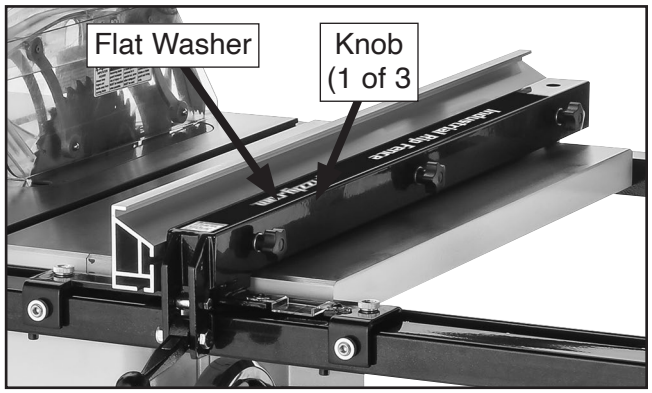

Figure 75. Location of knobs and flat washers securing fence to fence tube.

3. Place auxiliary fence board against fence tube. Place a thin metal shim (such as a ruler) between table and bottom of auxiliary fence board to ensure adequate clearance between fence board and table. Clamp in position.

4. Mark location of three mounting holes on auxiliary fence and remove auxiliary fence board from fence tube.

5. Using 7/32" drill bit, drill mounting holes in auxiliary fence board. Countersink holes 1/16" deep so head of flat head cap screws sits slightly beneath face of auxiliary fence board.

6. Insert (3) flat head cap screws through holes in auxiliary fence board (see **Figure 74**) and secure with knobs and flat washers removed earlier. The end result should be similar to **Figure 76**.

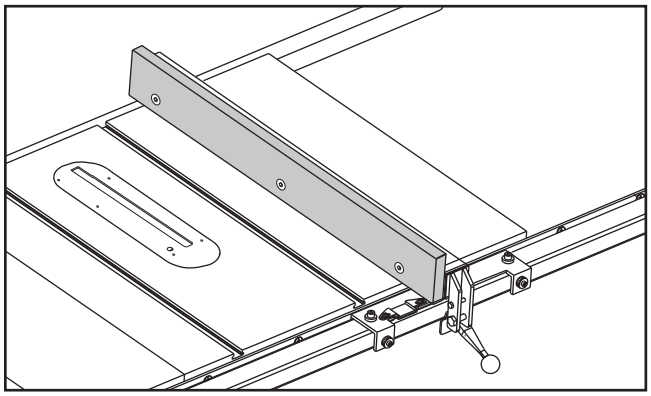

Figure 76. Example auxiliary fence attached to included fence.

Resawing Operations

The table saw motor is pushed to its limits when resawing. If the motor starts to bog down, slow down your feed rate. Motor overloading and blade wear can be reduced by using a ripping blade. Ripping blades are designed to clear the sawdust quickly.

Components Needed for Resawing:

Zero-Clearance Insert 1
Ripping Blade 10".....1
Clamps 2
Shop-Made Auxiliary Fence 1
Shop-Made Resaw Barrier.....1

⚠WARNING

You may experience kickback during this procedure. Stand to the side of the blade and wear safety glasses and a full face shield to prevent injury when resawing.

To perform resawing operations:

1. DISCONNECT MACHINE FROM POWER!

2. Remove standard table insert and blade guard assembly.

3. Install a ripping blade, install riving knife, lower blade below table surface, then install zero-clearance table insert.

4. Attach auxiliary fence and set it to desired width.

Note: *When determining correct width, do not forget to account for blade kerf and inaccuracy of fence scale while auxiliary fence is installed.*

5. Place workpiece against auxiliary fence and slide resaw barrier against workpiece, as shown in **Figure 77**. Now clamp resaw barrier to top of table saw at both ends.

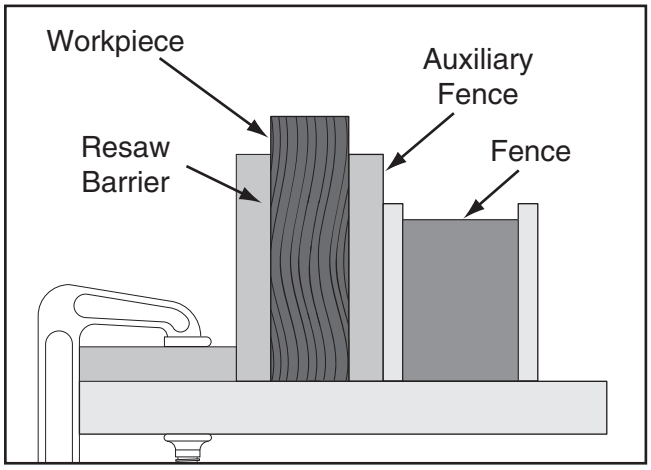

Figure 77. Ideal resaw workpiece setup.

6. Lower blade completely below table-top, and slide workpiece over blade to make sure it moves smoothly and fits between resaw barrier and fence.

7. Raise blade approximately 1 inch, or close to half the height of workpiece (see **Figure 78**), whichever is less.

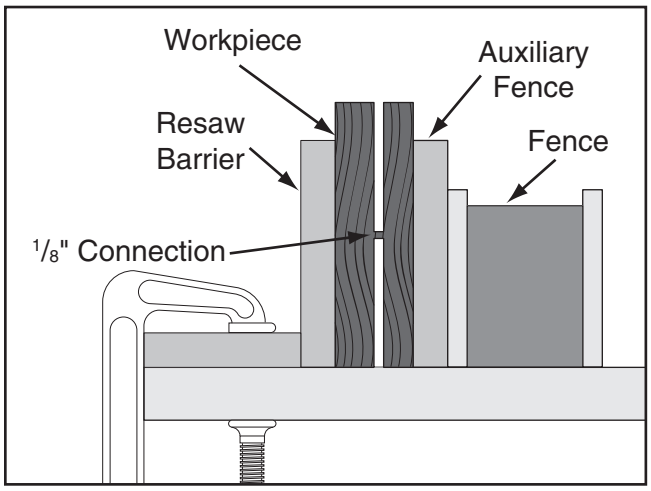

Figure 78. Ideal completed resaw cut.

8. Plug in table saw, turn it ***ON***, and use a push stick or push block to feed workpiece through blade, using a slow and steady feed rate.

   Note: *We recommend making a series of light cuts that get progressively deeper, to reduce the chance of stalling the motor.*

9. Flip workpiece end-for-end, keeping same side against fence, and run workpiece through blade.

10. Repeat **Steps 7–9** until blade is close to half the height of board to be resawn. The ideal completed resaw cut will leave a ⅛" connection when resawing is complete as shown in **Figure 78** on **Page 48**. Leaving a ⅛" connection will reduce risk of kickback.

11. Turn ***OFF*** table saw, then separate parts of workpiece and hand plane remaining ridge to remove it.

12. When finished resawing, remove resaw barrier and auxiliary fence, then re-install blade guard/spreader or riving knife and standard table insert.

⚠WARNING

The danger of kickback increases relative to the depth of a cut. Reduce the risk of kickback by making multiple passes to achieve the desired depth of cut. Failure to follow these warnings could result in serious personal injury.

⚠WARNING

Always use push sticks or push paddles to increase safety and control during operations which require that the blade guard and spreader must be removed from the saw. ALWAYS replace blade guard after resawing is complete.

SECTION 5: SAFETY ACCESSORIES

Featherboards

Easily made from scrap stock, featherboards provide an added degree of protection against kickback, especially when used together with push sticks. They also maintain pressure on the workpiece to keep it against the fence or table while cutting, which makes the operation easier and safer because the cut can be completed without the operator's hands getting near the blade. The angled ends and flexibility of the fingers allow the workpiece to move in only one direction.

Making a Featherboard

This sub-section covers the two basic types of featherboards: 1) Those secured by clamps, or 2) those secured with the miter slot.

Material Needed for Featherboard

Hardwood ¾" x 3" x 10" (Minimum)
Hardwood ¾" x 6" x 28" (Maximum) 1

Additional Material Needed for Mounting Featherboard in Miter Slot

Hardwood ⅜" x (Miter Slot Width) x 5"L 1
Wing Nut ¼"-20.....1
Flat Head Screw ¼"-20 x 2".....1
Flat Washer ¼"-20.....1

To make a featherboard:

1. Cut a hardwood board approximately ¾" thick to size. The length and width of the board can vary according to your design. Most featherboards are 10"–28" long and 3"–6" wide. Make sure the wood grain runs parallel with the length of the featherboard, so the fingers you will create in **Step 3** will bend without breaking.

2. Cut a 30° angle at one end of the board.

⚠CAUTION

We recommend using a bandsaw for making fingers in the next step because it tends to be safer. A table saw can be used, but it will over-cut the underside of the ends, produce a thicker kerf, and require you to stop the blade half-way through the cut, which can be dangerous.

3. Make a series of end cuts with the grain ⅜"–¼" apart and 2"–3" long, as shown in **Figure 79** (A). Alternatively, start cuts at 2"-3" deep, then make them progressively deeper, as shown in **Figure 79** (B).

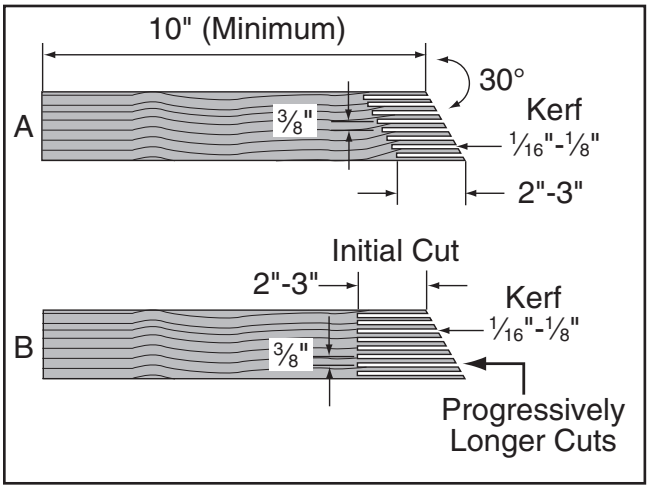

Figure 79. Patterns for featherboards (top view).

IMPORTANT: Cuts made across the grain result in weak fingers that easily break when flexed. When made correctly, the fingers should withstand flexing from moderate pressure. To test the finger flexibility, push firmly on the ends with your thumb. If the fingers do not flex, they are likely too thick (the cuts are too far apart).

NOTICE

Only Steps 1–3 are required to make a clamp-mounted featherboard. Refer to Page 52 for instructions on clamping.

4. Rout a ¼"–⅜" wide slot 4"–5" long in workpiece and 1"–2" from short end of featherboard (see **Figure 80**).

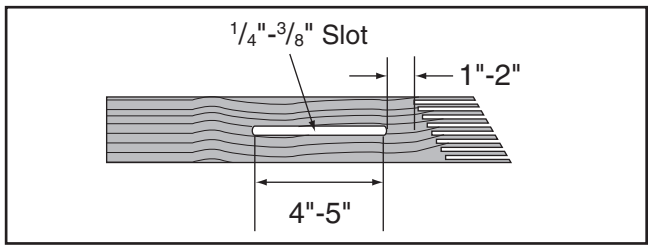

Figure 80. Slot routed in featherboard.

5. Cut a miter bar approximately 5" long that will fit in table miter slot, as shown in **Figure 81**.

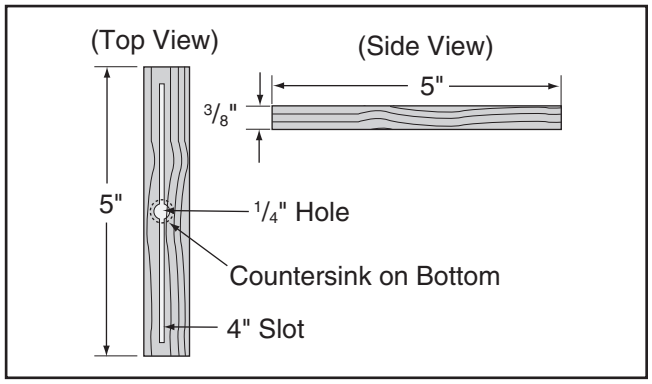

Figure 81. Miter bar pattern.

Tip: *Consider making miter bar longer for larger featherboards—approximately half the length of total featherboard—to support force applied to the featherboard during use.*

6. Drill a ¼" hole in center of bar, then countersink bottom to fit a ¼"-20 flat head screw.

7. Mark a 4" line through center of countersunk hole in center, then use a jig saw with a narrow blade to cut it out.

8. Assemble miter bar and featherboard with a ¼"-20 x flat head screw, flat washer, and a wing nut or a star knob (see **Figure 82**). Congratulations! Your featherboard is complete and can now be safely used.

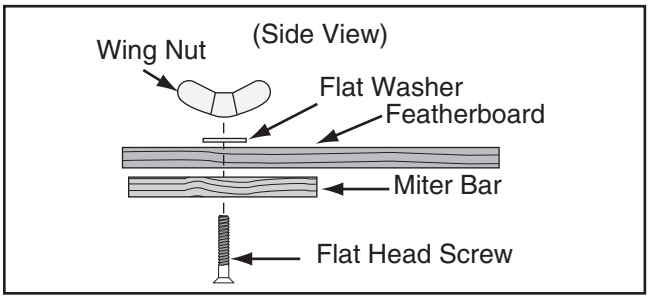

Figure 82. Assembling miter slot featherboard components.

Note: *The routed slot, countersink hole, and flat head screw are essential for miter bar to clamp into miter slot. When wing nut is tightened, it will draw flat head screw upward into countersunk hole. This will spread sides of miter bar and force them into walls of miter slot, locking featherboard in place.*

Tip: *The length of the flat head screw depends on thickness of featherboard—though 1½" to 2" lengths usually work.*

Now, proceed to **Mounting Featherboard in Miter Slot** on **Page 52**.

Mounting Featherboards w/Clamps

1. Lower saw blade, then adjust fence to desired width and secure it.

2. Place workpiece against fence, making sure it is 1" in front of the blade.

3. Place a featherboard on table away from blade so all fingers point forward and contact workpiece (see **Figure 83**).

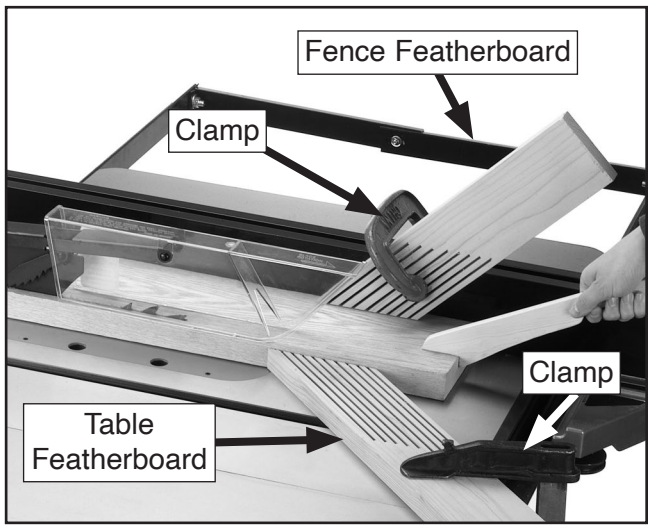

Figure 83. Example of featherboards secured with clamps.

4. Secure featherboard to table with a clamp.

5. Check featherboard by pushing it with your thumb to ensure it is secure.

   — If featherboard moves, tighten clamp more.

6. Optional: If cutting long workpieces, it may be beneficial to use a second featherboard attached to fence to keep board firmly against table while feeding.

Mounting Featherboard in Miter Slot

1. Lower saw blade, then adjust fence to desired width and secure it.

2. Place workpiece evenly against fence, making sure it is 1" in front of blade.

3. Slide featherboard miter bar into miter slot, making sure fingers slant toward blade, as shown in **Figure 84**.

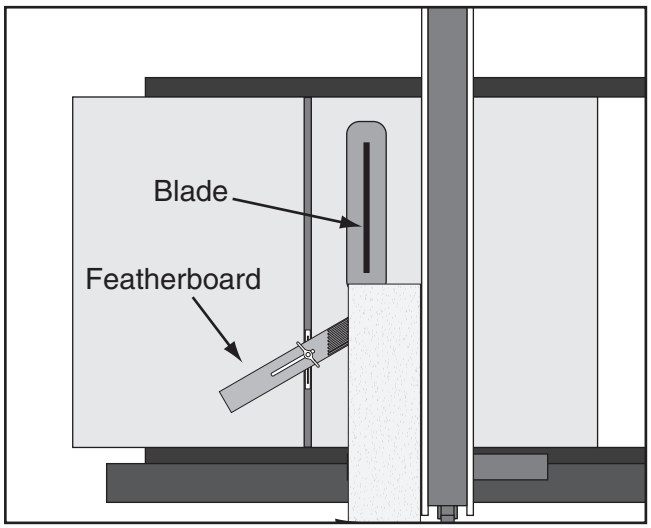

Figure 84. Featherboard installed in miter slot and supporting workpiece for ripping cut.

4. Position fingered edge of featherboard against edge of workpiece, so that all fingers contact workpiece. Slide featherboard toward blade until first finger is nearly even with end of workpiece, which should be 1" away from blade.

5. Double-check workpiece and featherboard to ensure they are properly positioned, as described in **Step 4**. Then secure featherboard to table. Check featherboard by hand to make sure it is tight.

   Note: *The featherboard should be placed firmly enough against workpiece to keep it against fence but not so tight that it is difficult to feed workpiece.*

Push Sticks

When used correctly, push sticks reduce the risk of injury by keeping hands away from the blade while cutting. In the event of an accident, a push stick can also absorb damage that would have otherwise happened to hands or fingers.

Using a Push Stick

Use push sticks whenever your hands will get within 12" of the blade. To maintain control when cutting large workpieces, start the cut by feeding with your hands then use push sticks to finish the cut, so your hands are not on the end of the workpiece as it passes through the blade.

Feeding: Place the notched end of the push stick against the end of the workpiece (see **Figure 86** below), and move the workpiece into the blade with steady downward and forward pressure.

Supporting: A second push stick can be used to keep the workpiece firmly against the fence while cutting. When using a push stick in this manner, only apply pressure before the blade; otherwise, pushing the workpiece against or behind the blade will increase the risk of kickback (see **Push Stick Prohibition Zone** in **Figure 85** below).

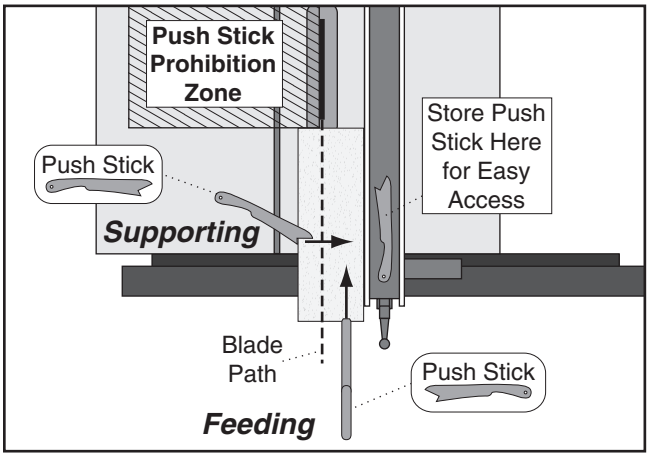

Figure 85. Using push sticks to rip narrow stock.

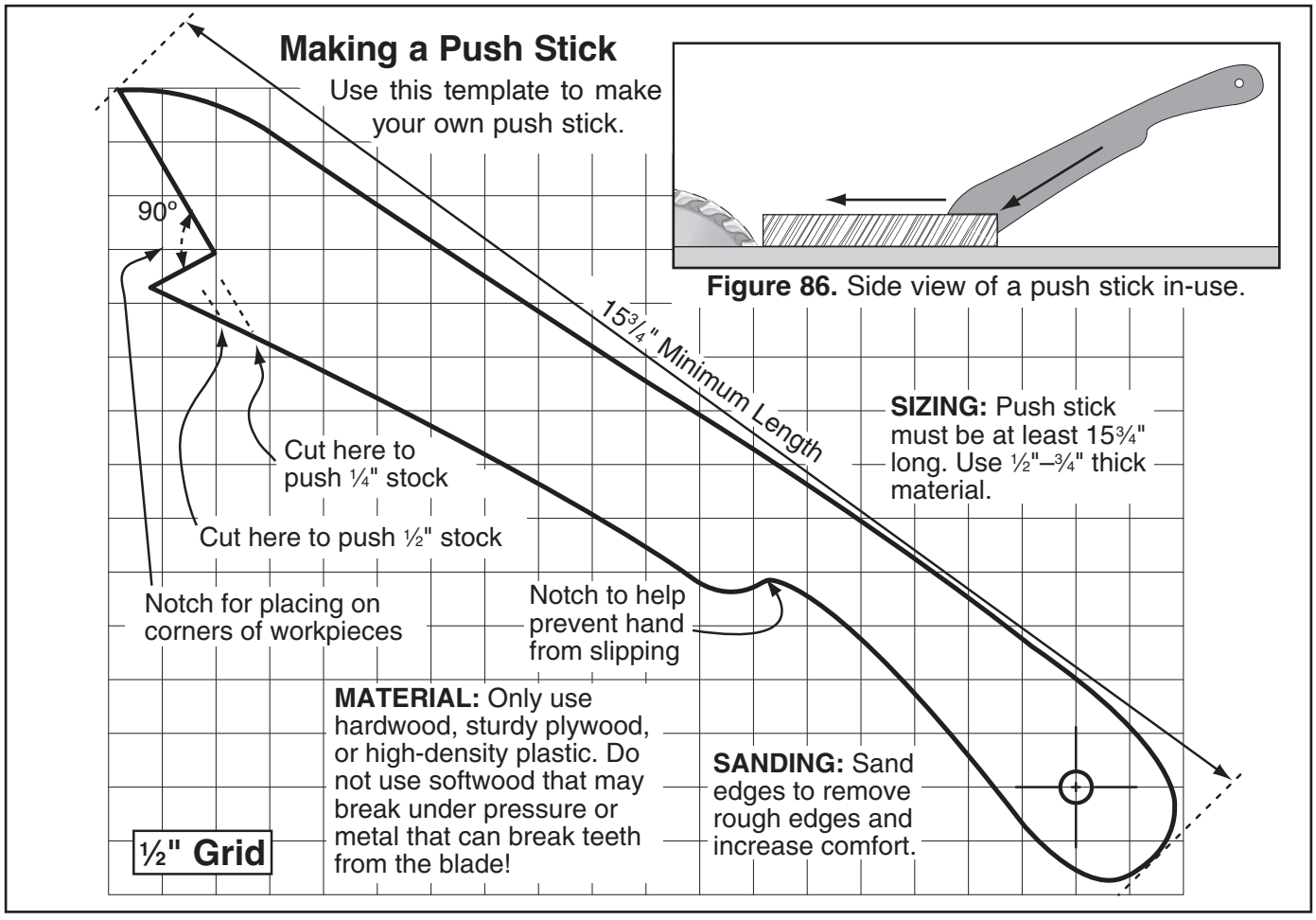

Figure 86. Side view of a push stick in-use.

Figure 87. Template for a basic shop-made push stick (not shown at actual size).

Push Blocks

When used correctly, a push block reduces the risk of injury by keeping hands away from the blade while cutting. In the event of an accident, a push block often takes the damage that would have otherwise happened to hands or fingers.

Using a Push Block

A push block can be used in place of or in addition to a push stick for feeding workpieces into the blade. Due to their design, push blocks allow the operator to apply firm downward pressure on the workpiece that could not otherwise be achieved with a push stick.

The push block design on this page can be used in two different ways (see **Figure 88** below). Typically, the bottom of the push block is used until the end of the workpiece reaches the blade.

The notched end of the push block is then used to push the workpiece the rest of the way through the cut, keeping the operator's hands at a safe distance from the blade. A push stick is often used at the same time in the other hand to support the workpiece during the cut (see **Using a Push Stick** on previous page).

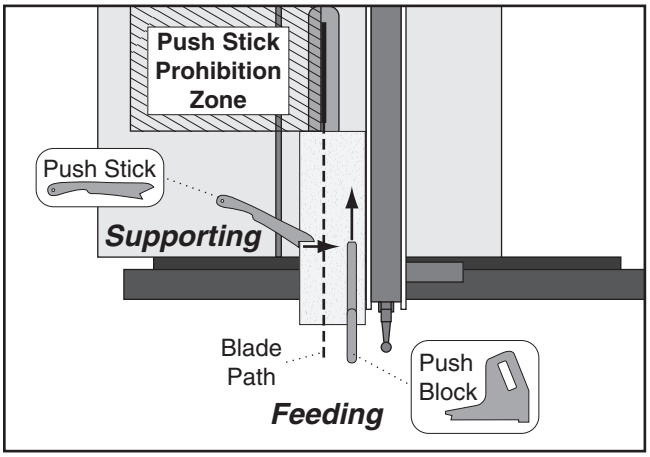

Figure 89. Using a push block and push stick to make a rip cut.

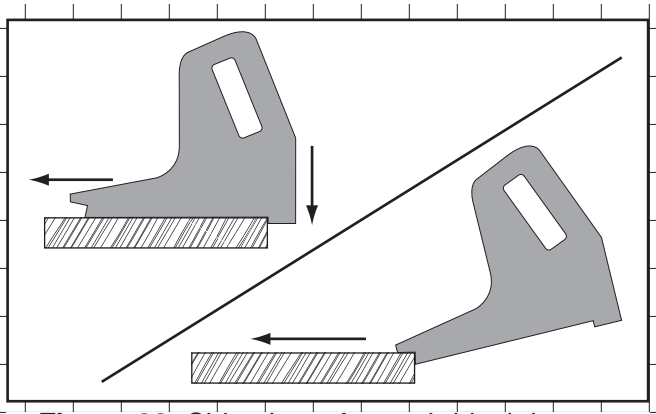

Figure 88. Side view of a push block in use.

Figure 90. Template for a shop-made push block (shown at 50% of full size).

Narrow-Rip Auxiliary Fence & Push Block

There are designs for hundreds of specialty jigs that can be found in books, trade magazines, and on the internet. These types of jigs can greatly improve the safety and consistency of cuts. They are particularly useful during production runs when dozens or hundreds of the same type of cut need to be made.

The narrow-rip auxiliary fence and push block system shown in this section is an example of a specialty jig that can be made to increase the safety of very narrow rip cuts.

Material Needed for Narrow Rip Auxiliary Fence & Push Block

Hardwood ¾" x 3" x Length of Fence 1
Plywood ¾" x 5¼" x Length of Fence 1
Wood Screws #8 x 1½" 8

Material Needed for Push Block

Hardwood or Plywood ¾" x 15" x 5⅝" 1
Hardwood or Plywood ¾" x 10" x 5"–9" 1
Cyanoacrylate Wood Glue .....Varies
Wood Screws #8 x 1½" .....As Needed

Making a Narrow-Rip Push Block for an Auxiliary Fence

1. Cut a piece of ¾" thick plywood 5¼" wide and as long as your table saw fence; cut a piece of ¾" thick hardwood 3" wide and as long as your table saw fence, as shown in **Figure 91**.

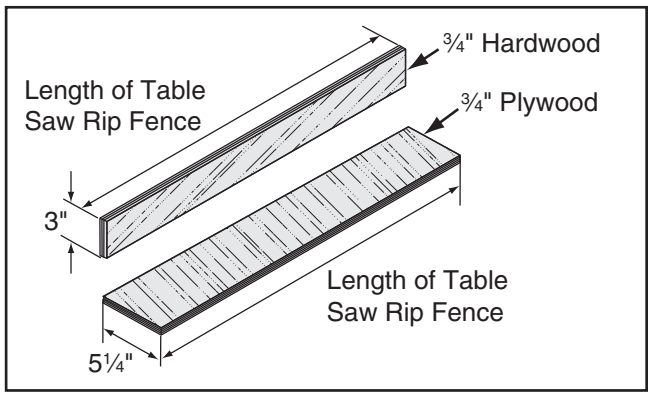

Figure 91. Auxiliary fence dimensions.

Note: *We recommend cutting hardwood board oversize, then jointing and planing it to correct size to make sure board is square and flat. Only use furniture-grade plywood or kiln-dried hardwood to prevent warping.*

2. Pre-drill and countersink eight pilot holes ⅜" from bottom of 3" wide board, then secure boards together with eight #8 x 1½" wood screws, as shown in **Figure 92**.

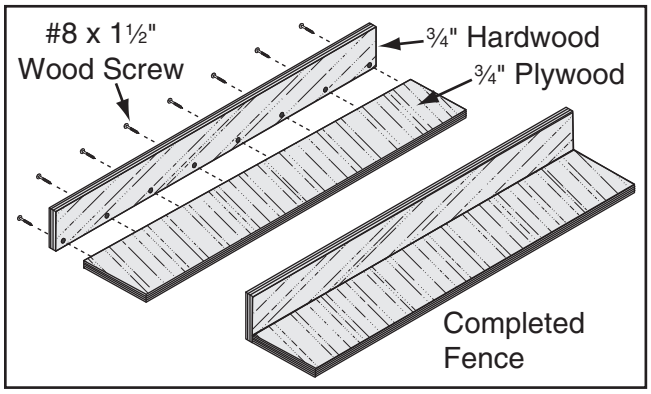

Figure 92. Location of pilot holes.

3. Using ¾" material you used in previous steps, cut out pieces for push block per dimensions shown in **Figure 93**; for handle, cut a piece 10" long by 5"–9" high and shape it as desired to fit your hand.

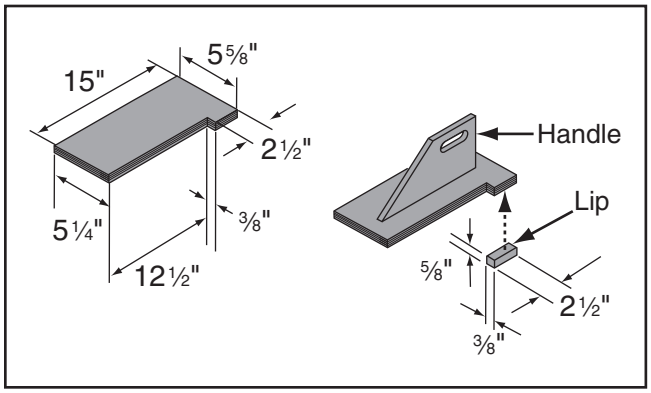

Figure 93. Push block dimensions and construction.

4. Attach handle to base with #8 x 1½" wood screws, and attach lip to base with cyanoacrylate-type wood glue.

Using Auxiliary Fence & Push Block

1. Place auxiliary fence on table and clamp it to fence at both ends, then adjust distance between auxiliary fence and blade—this determines how wide workpiece will be ripped (see **Figure 94**).

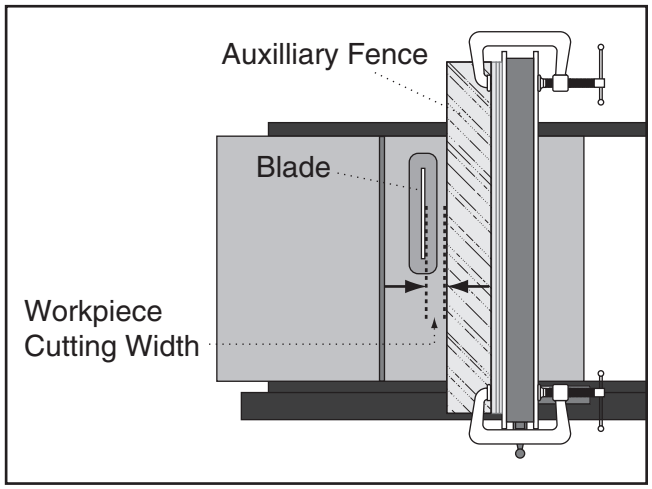

Figure 94. Adjusting ripping distance between blade and auxiliary fence.

2. Install blade guard, then secure spreader pawls in upright position, as shown in **Figure 56** on **Page 36**, so they do not interfere with push block lip.

⚠CAUTION

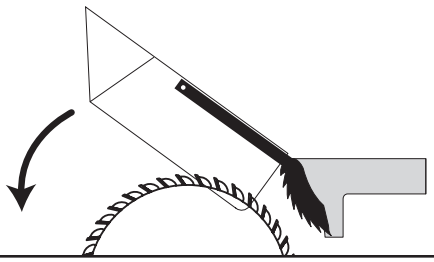

Keep the blade guard installed and in the down position. Failure to do this could result in serious personal injury or death.

3. Place workpiece 1" behind blade and evenly against table and auxiliary fence.

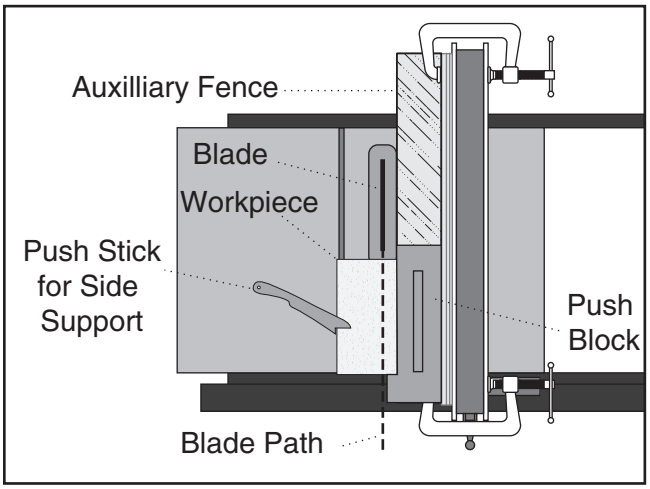

Figure 95. Push block in position to push workpiece through blade.

4. Turn saw ***ON***, then begin ripping workpiece using a push stick for side support.

5. As workpiece nears end of cut, place push block on auxiliary fence with lip directly behind workpiece, then release push stick just before blade.

6. Guide workpiece rest of way through cut with push block, as shown in **Figure 96**.

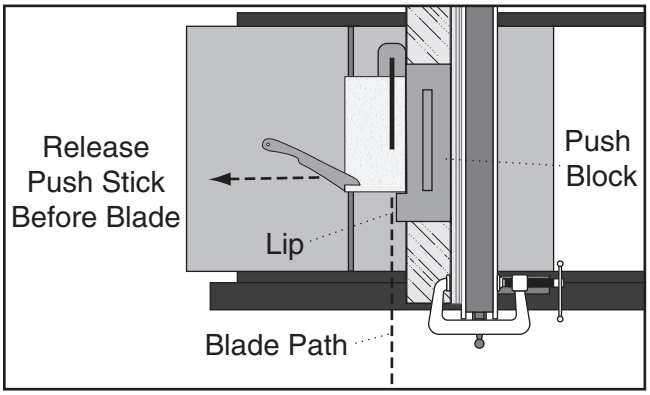

Figure 96. Ripping with push block.

⚠WARNING

Turn *OFF* the saw and allow blade to come to a complete stop before removing cut-off piece. Failure to follow this warning could result in serious personal injury.

Outfeed & Support Tables

One of the best accessories for improving the safety and ease of using a table saw is simply placing a large table (outfeed table) behind the saw to catch the workpiece (see **Figure 97**). Additionally, another table to the left of the saw (support table) can also help support large workpieces so they can be cut safely and accurately.



Figure 97. Example of outfeed & support tables.

Crosscut Sled

A crosscut sled (see **Figure 98**) is a fantastic way to improve the safety and accuracy of crosscutting on the table saw. Most expert table saw operators use a crosscut sled when they have to crosscut a large volume of work, because the sled offers substantial protection against kickback when crosscutting.



Figure 98. Example of crosscut sled.

SECTION 6: ACCESSORIES

⚠WARNING

Installing unapproved accessories may cause machine to malfunction, resulting in serious personal injury or machine damage. To reduce this risk, only install accessories recommended for this machine by Grizzly.

NOTICE

Refer to our website or latest catalog for additional recommended accessories.

FORREST WOODWORKER II 10" BLADES
T20778—10", 20 TEETH
T20779—10", 40 TEETH
T23527—10" 48 TEETH
Hailed as the Cadillac of all blades, Forrest saw blades have become legendary for their ability to leave highly polished, finish ready surfaces on nearly everything they cut. Made in USA.

With these all purpose blades for table saws you can rip and crosscut 1" – 2" rockhards and soft-woods resulting in a smooth as sanded surface. With 20° face hook, ply veneers will crosscut with no bottom splinter at moderate feed rates. Double hard and 40% stronger C4 carbide will give up to 300% longer life between sharpenings. Ends blade changing (one blade does rip, combo and crosscut), second-step finishing and cutting 1/16" oversize to allow for resurfacing. Buy and sharpen one blade instead of three! 5/8" arbor, 1/8" kerf.



Figure 99. T20779 Forrest Woodworker II Blade.

Forrest Dado Blade Sets
H4756— 8" x 5/8", 24 Teeth, 1/4"–29/32" Groove
T23267—8" x 5/8", 24 Teeth, 3/16"–1/4" Groove
The world's finest dado head clean cuts all your grooves! No splintering when cross-cutting oak, ply veneers and melamine. Perfect for flat-bottomed grooves. No staggered steps or round bottoms like a wobble-dado leaves! Cuts in all directions - rip, cross-cut, miter, any depth. Cuts all sized grooves 1/4" through 29/32" increments.



Figure 100. Forrest Dado Blades.

G1163P—1HP Floor Model Dust Collector
G0710—1HP Wall-Mount Dust Collector
Excellent point-of-use dust collectors that can be used next to the machine with only a small amount of ducting. Specifications: 450 CFM, 7.2" static pressure, 2 cubic foot bag, and 30 micron filter. Motor is 1HP, 110V/220V, 14A/7A.

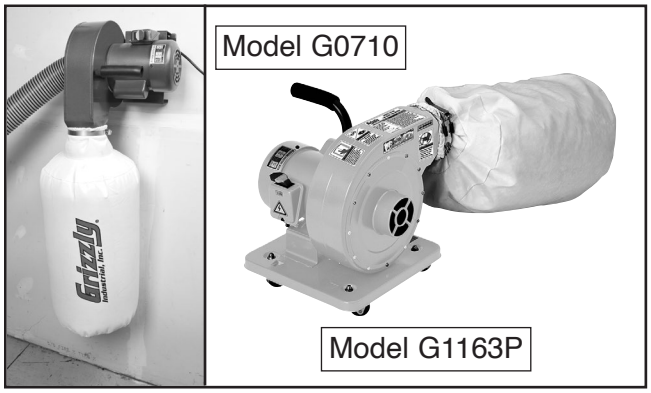

Figure 101. Point-of-use dust collectors.

D4206—Clear Flexible Hose 4" x 10'
D4256—45° Elbow 4"
W1034—Heavy-Duty Clear Flex Hose 4" x 10'
D2107—Hose Hanger 4 ¼"
W1015—Y-Fitting 4" x 4" x 4"
W1017—90° Elbow 4"
W1019—Hose Coupler (Splice) 4"
W1317—Wire Hose Clamp 4"
W1007—Plastic Blast Gate 4"
W1053—Anti-Static Grounding Kit
We have hand picked a selection of commonly used dust collection components for machines with 4" dust ports.



Figure 102. Dust collection accessories.

G4181—1 HP Power Feeder 240V
G0826—⅔ HP 3-Roller Power Feeder
T33926—⅔ HP 4-Roller Power Feeder
G1095—Power Feeder 4 Roller/4 Speed
Installing a power feeder on your table saw will make repetitive cuts much easier and safer. Can be installed on nearly any table saw. Easy to adjust wherever needed, including out of the way when not needed! A must for any shop.

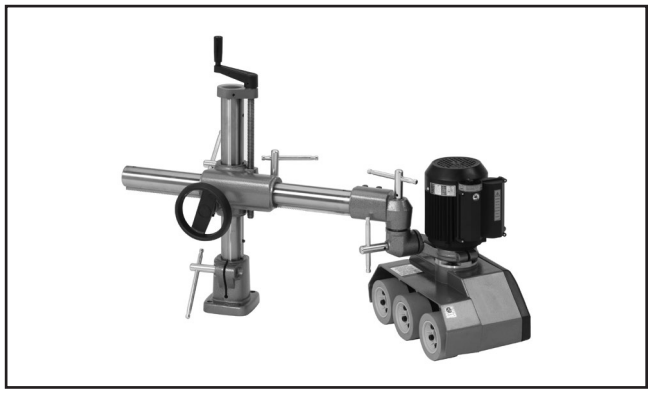

Figure 103. G4181 Power Feeder.

T28922—Bear Crawl "Cub" Mobile Base
The Cub version of the Bear Crawl was designed for small-footprint machines weighing up to 900 lbs. It features wide inline fixed casters and outrigger swivel casters to keep your equipment moving effortlessly on almost any surface. This is a high-quality mobile base that will make your shop more convenient and efficient and will keep your equipment stable and rolling for years to come. Adjusts from 14" x 14" to 22½" x 22½"!

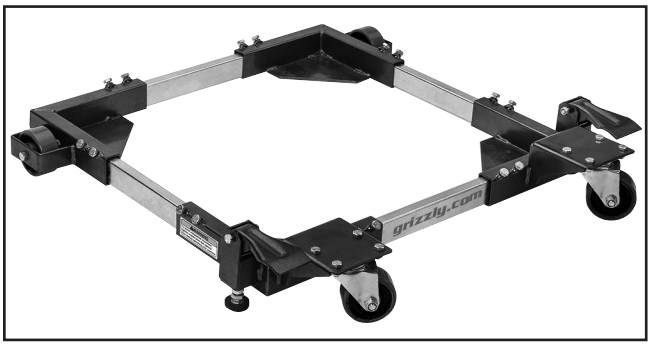

Figure 104. T28922 Bear Crawl Mobile Base.

H8029—5 Piece Safety Kit
This kit has four essential jigs. Includes two push blocks, push stick, featherboard and combination saw and router gauge. Featherboard fits ⅜" x ¾" miter slots. Made of high visibility yellow plastic.

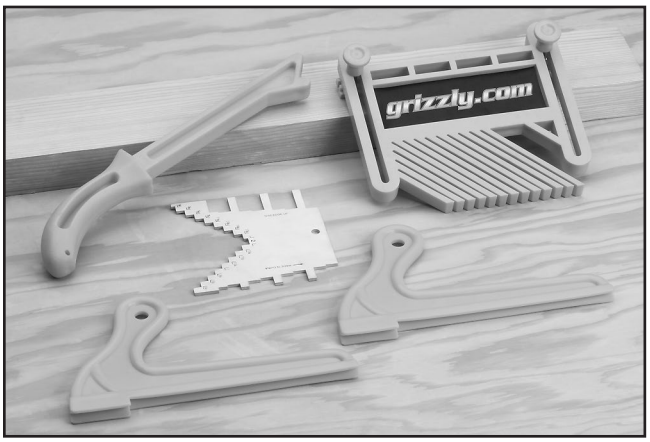

Figure 105. H8029 5-Piece Safety Kit.

SECTION 7: MAINTENANCE

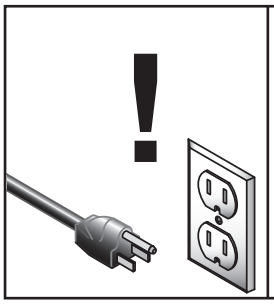

⚠CAUTION

To prevent serious personal injury from shock or accidental startup, always disconnect power from machine before doing any maintenance.

Schedule

For optimum performance from this machine, this maintenance schedule must be strictly followed.

Ongoing
To minimize your risk of injury and maintain proper machine operation, shut down the machine immediately if you ever observe any of the items below, and fix the problem before continuing operations:

- Loose mounting bolts/arbor nut.
- Damaged saw blade.
- Worn or damaged wires.
- Any other unsafe condition.

Weekly Maintenance:
- Clean table surface and miter slot grooves.
- Clean and protect cast-iron table.
- Clean rip fence.

Monthly Maintenance:
- Clean/vacuum dust buildup from inside cabinet and off motors.
- Check/replace belt for proper tension, damage or wear (**Page 76**).

Every 6–12 Months:
- Lubricate trunnion slides, worm gear, bull gear, and leadscrew (**Page 61**).

Cleaning & Protecting

Cleaning the Model G0899 is relatively easy. Vacuum excess wood chips and sawdust, and wipe off the remaining dust with a dry cloth. If any resin has built up, use a resin-dissolving cleaner to remove it.

Protect the unpainted cast-iron table by wiping it clean after every use—this ensures moisture from wood dust does not remain on the bare metal surface. Keep the table rust-free with regular applications of products like SLIPIT®.

Recommended Metal Protectants

G5562—SLIPIT® 1 Qt. Gel
G5563—SLIPIT® 11 Oz. Spray



Figure 106. Recommended products for protecting unpainted cast iron/steel parts on machinery.

Lubrication

It is essential to clean components before lubricating them because dust and chips build up on lubricated components and make them hard to move. Simply adding more grease to them will not yield smooth moving components.

Clean the components in this section with an oil/grease solvent cleaner and shop rags.

If you thoroughly clean the components in this section before lubricating them, the result will be silky smooth movement when turning the handwheels, which will result in much higher enjoyment on your part!

Items Needed	Qty
NLGI#2 Grease or Equivalent	As Needed
Mineral Spirits	As Needed
Clean Shop Rags	As Needed

Trunnion Slides

Lubrication Type ... T26419 or NLGI#2 Equivalent
Amount ..... 1-2 Dabs
Lubrication Frequency ..... 6–12 Months

Clean out the front and rear trunnion slides with mineral spirits and a rag, then apply grease into each groove. Move the blade tilt back-and-forth to spread the grease (see **Figure 107**).

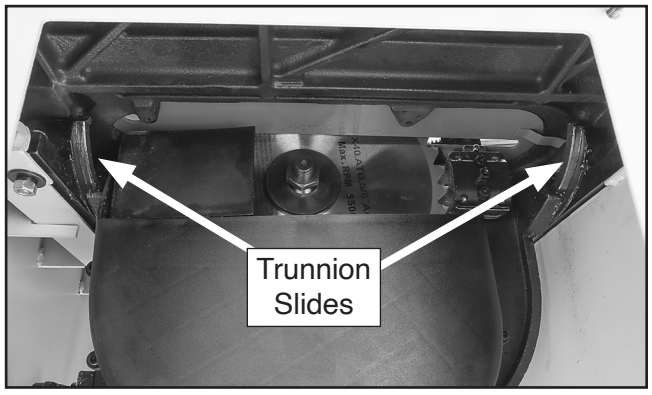

Figure 107. Trunnion slide locations.

Worm Gear, Bull Gear & Leadscrew

Lubrication Type ... T26419 or NLGI#2 Equivalent
Amount ..... Dab
Lubrication Frequency ..... 6–12 Months

Clean away any built up grime and debris from the worm gear, bull gear, and leadscrew (see **Figure 108**–**Figure 109**) with a wire brush, rags, and mineral spirits. Allow the components to dry, then apply a thin coat of grease to them.

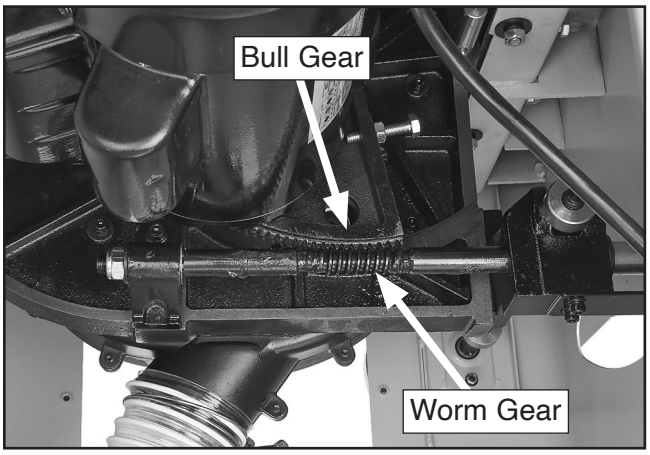

Figure 108. Worm and bull gear location.

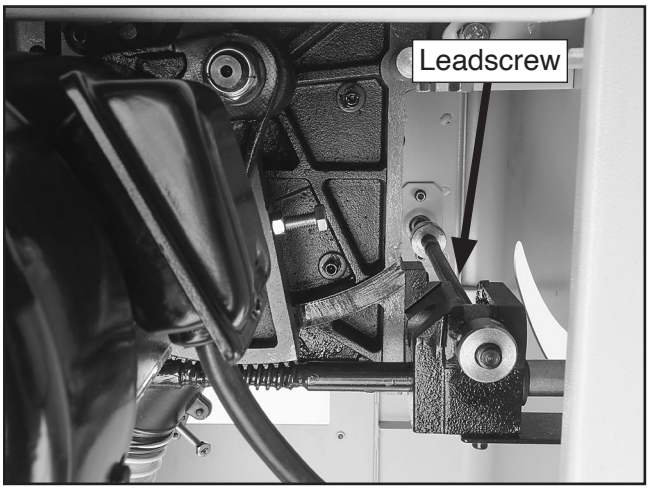

Figure 109. Leadscrew location.

SECTION 8: SERVICE

Review the troubleshooting procedures in this section if a problem develops with your machine. If you need replacement parts or additional help with a procedure, call our Technical Support. **Note:** *Please gather the serial number and manufacture date of your machine before calling.*

Troubleshooting

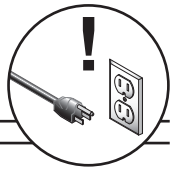

Motor & Electrical

Symptom	Possible Cause	Possible Solution
Machine does not start, or power supply breaker immediately trips after startup.	1. Switch disabling key removed. 2. Machine circuit breaker tripped. 3. Power supply circuit breaker tripped or fuse blown. 4. Plug/receptacle at fault/wired incorrectly. 5. Motor wired incorrectly. 6. Wiring broken, disconnected, or corroded. 7. ON/STOP switch or circuit breaker at fault. 8. Motor or motor bearings at fault.	1. Install switch disabling key. 2. Reset circuit breaker on switch (**Page 78**). 3. Ensure circuit is sized correctly and free of shorts. Reset circuit breaker or replace fuse. 4. Test for good contacts; correct wiring. 5. Correct motor wiring connections (**Page 78**). 6. Fix broken wires or disconnected/corroded connections. 7. Replace switch/circuit breaker. 8. Replace motor.
Machine stalls or is underpowered.	1. Motor wires connected incorrectly. 2. Motor overheated. 3. Centrifugal switch needs adjustment/ contact points dirty. 4. Motor or motor bearings at fault.	1. Correct motor wiring connections (**Page 78**). 2. Clean motor, let cool, and reduce workload. 3. Adjust/replace centrifugal switch/clean contact points. 4. Replace motor.
Machine has vibration or noisy operation.	1. Motor or component loose. 2. Motor mount loose/broken. 3. Motor fan rubbing on fan cover. 4. Centrifugal switch needs adjustment. 5. Motor bearings at fault.	1. Replace damaged or missing bolts/nuts or tighten if loose. 2. Tighten/replace. 3. Fix/replace fan cover; replace loose/damaged fan. 4. Adjust switch. 5. Test by rotating shaft; grinding/loose shaft requires bearing replacement.

Operations

Symptom	Possible Cause	Possible Solution
Machine stalls or is underpowered.	1. Workpiece material unsuitable for machine. 2. Machine undersized for task. 3. Feed rate too aggressive for motor blade. 4. Workpiece crooked; fence not parallel with blade.	1. Only cut wood/ensure moisture is below 20%. 2. Use correct blade/reduce feed rate or depth of cut. 3. Reduce feed pressure and speed. 4. Use jointer to straighten edge of workpiece that slides up against fence; adjust fence parallel with blade (**Page 70**).
Machine has vibration or noisy operation.	1. Mobile base lock knobs loose or stand feet not adjusted properly. 2. Blade at fault. 3. V-belt(s) worn, loose, pulleys misaligned or belt slapping cover.	1. Tighten mobile base lock knobs or adjust stand feet to stabilize machine. 2. Replace warped/bent blade (**Page 33**); sharpen dull blade. 3. Inspect/replace belt (**Page 76**). Realign pulleys if necessary.

Operations (Cont.)

Symptom	Possible Cause	Possible Solution
Rip fence does not move smoothly.	1. Rip fence mounted/adjusted incorrectly. 2. Rails dirty or sticky.	1. Remount rip fence. Adjust fence to ensure adjustment screws are not too tight (**Page 70**). 2. Clean and wax rails.
Material moves away from fence when ripping.	1. Improper feeding technique. 2. Fence not parallel with blade.	1. Review proper feeding technique (**Page 29**). 2. Adjust fence parallel with blade (**Page 70**).
Blade not aligned with miter slot or fence.	1. Blade warped/damaged/dull. 2. Fence not parallel with blade. 3. Miter slot not parallel with blade.	1. Replace blade (**Page 33**). 2. Adjust fence parallel with blade (**Page 70**). 3. Adjust miter slot parallel with blade (**Page 66**).
Blade tilt does not stop at 45°/90°.	1. Sawdust built up in/on trunnions. 2. 45°/90° stops out of adjustment.	1. Remove sawdust from trunnions. Clean and re-lubricate as necessary (**Page 61**). 2. Adjust 45°/90° stops (**Page 64**).
Blade hits table insert when tilting to 45°.	1. Sawdust/debris stuck in trunnion slides. 2. 45° stop out of adjustment. 3. Table/trunnion assembly out of alignment. 4. Miter slot not parallel with blade. 5. Blade incorrectly installed.	1. Clean sawdust/debris out of trunnion slides. 2. Adjust 45° stop (**Page 64**). 3. Adjust table/trunnion mounting position (**Page 66**). 4. Adjust miter slot parallel with blade; shim table (**Page 66**). 5. Re-install blade (**Page 33**).
Board binds or burns when feeding through table saw.	1. Blade warped/damaged/dull. 2. Too many teeth on blade for cutting type. 3. Fence not parallel to blade. 4. Miter slot not parallel with blade. 5. Riving knife or spreader not correctly aligned with blade.	1. Replace blade (**Page 33**). 2. Use correct, sharp blade (**Page 31**). 3. Adjust fence parallel with blade (**Page 70**). 4. Adjust miter slot parallel with blade (**Page 66**). 5. Adjust riving knife or spreader into alignment with blade (**Page 68**).
Handwheel binds or is difficult to move.	1. Lock knob is tightened. 2. Handwheel shaft pins are wedged.	1. Loosen lock knob. 2. Remove handwheel and adjust shaft pins.
Blade too close to insert.	1. Blade or arbor washers incorrectly installed on arbor. 2. Table/trunnion assembly out of alignment.	1. Verify blade and arbor washers are correctly installed in the required positions (**Page 34**). 2. Adjust table/trunnion mounting position (**Page 66**).
Blade will not go beneath table surface.	1. Roll pin/set screw in worm gear contacting geared trunnion.	1. Tighten roll pins and set screws in the worm gear.
Blade will not move up or down.	1. Set screw on worm gear is loose or missing.	1. Tighten or replace set screw.
Too much sawdust blown back toward operator.	1. Blade guard removed. 2. Too many air leaks in cabinet for proper dust collection. 3. Dust collection system clogged. 4. Dust collection system lacks required CFM at machine. 5. Fence not parallel with blade (pressure at blade backside). 6. Miter slot not parallel with blade.	1. Re-install blade guard for maximum safety and dust control (**Page 34**). 2. Seal leaks in cabinet or around blade guard dust port. 3. Remove clog. 4. Revise ducting layout for improved suction; use a different dust collector. 5. Adjust fence parallel with blade (**Page 70**). 6. Adjust miter slot parallel with blade (**Page 66**).
Workpiece catches on table/dado insert or table throat during cutting operation.	1. Table/dado insert out of adjustment.	1. Adjust table/dado insert so it is perfectly flush with table surface (**Page 74**).

Blade Tilt Stops

The table saw features stop collars that stop the blade exactly at 45° and 90° when tilting it with the handwheel. The stops have been set at the factory and should require no adjustments, unless you notice that your cuts are not accurate.

Note: *The tilt scale reads "0" when the blade is 90° to the table.*

Tools Needed	**Qty**
90° Square	1
45° Square	1
Hex Wrench 2.5mm	1
Hex Wrench 3mm	1

Setting 90° Stop Collar

1. DISCONNECT MACHINE FROM POWER!

2. Raise blade as high as it will go, then tilt it toward 0° until it stops and cannot be tilted any more.

3. Place 90° square against table and blade so it contacts blade evenly from bottom to top, as shown in **Figure 110**. Make sure blade tooth does not obstruct placement of square.

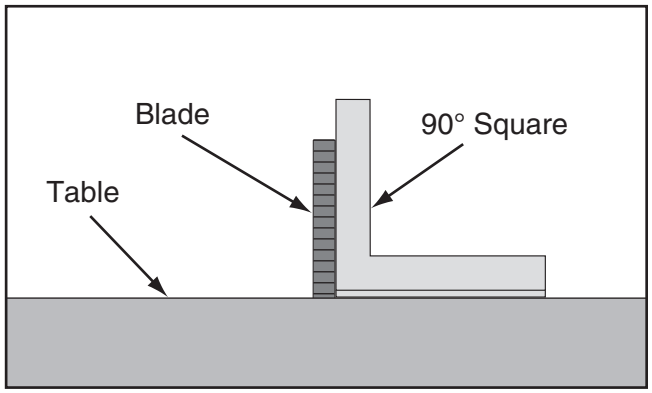

Figure 110. Checking blade at 90°.

— If blade *is* 90° to table, then adjustments do not need to be made. Make sure tilt indicator arrow shown in **Figure 111** points to 0° mark on scale. Adjust position by loosening button head screw, moving indicator with your fingers, then tightening screw.



Figure 111. Tilt indicator arrow.

— If blade is *not* 90° to table, you will need to adjust 90° stop collar. Proceed to next step.

4. Tilt blade away from 0° by about 5°, so there is room for 90° stop collar to move.

5. Open motor door, loosen set screws shown in **Figure 112**, then thread 90° stop collar one turn away from trunnion bracket. This will allow you to square blade in next step.

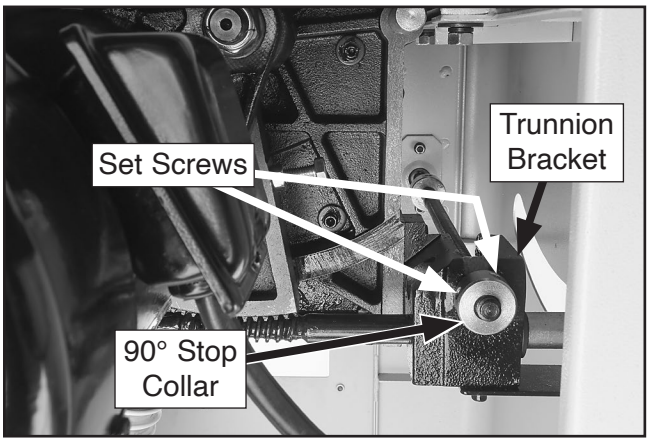

Figure 112. 90° stop collar and set screws.

6. Place square against blade, as shown in **Figure 110**, then adjust blade until it is perfectly square to table.

7. Without turning blade tilt leadscrew, finger-tighten 90° collar against trunnion bracket, then tighten two set screws to secure collar position.

8. Repeat **Steps 2–3** to verify that collar adjustment you made was correct. When adjustment is satisfactory, close motor door.

Setting 45° Stop Collar

1. DISCONNECT MACHINE FROM POWER!

2. Raise blade as high as it will go, then tilt it towards 45° until it stops and cannot be tilted any more.

3. Place a 45° square against table and blade so it contacts blade evenly from bottom to top, as shown in **Figure 113**. Make sure a blade tooth does not obstruct placement of square.

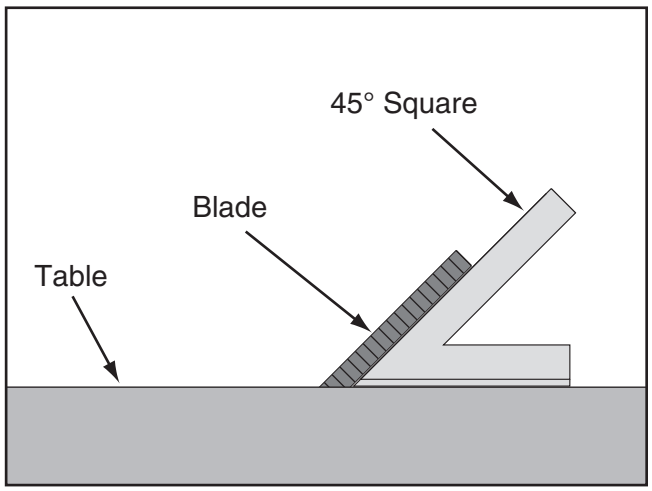

Figure 113. Checking blade at 45°.

   — If blade *is* 45° to table, then adjustments do not need to be made.

   — If blade *is not* 45° to table, you will need to adjust 45° stop collar. Proceed to next step.

4. Tilt blade to 30°, so there is room for stop collar to move.

5. Open right access cover, loosen set screws on 45° stop collar (see **Figure 114**), then turn collar one turn away from trunnion bracket. This will allow you to adjust blade to exactly 45° in next step.

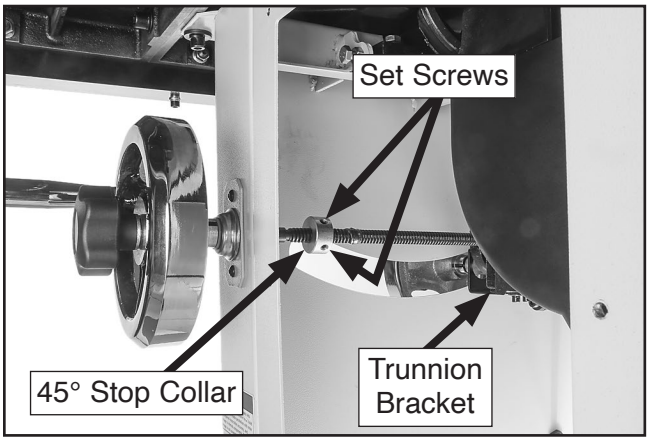

Figure 114. Location of 45° stop collar (right access cover removed).

6. Place a 45° square against blade, as shown in **Figure 113**, then adjust blade until it is exactly 45° to table.

7. Without turning blade tilt leadscrew, finger-tighten 45° stop collar against trunnion bracket, then tighten two set screws to secure collar position.

8. Repeat **Steps 2–3** to verify collar adjustment is correct. When adjustment is satisfactory, close right access cover.

Miter Slot to Blade Parallelism

Your table saw will give the best results if the miter slot and the rip fence are adjusted parallel to the blade. If either of these are not exactly parallel, your cuts and your finished work will be lower in quality, but more importantly, the risk of kickback will be increased.

Tools Needed	Qty
Adjustable Square	1
Marker	1
Metal Shim Stock	As Needed
Hex Wrench 6mm	1

To adjust blade parallel to miter slot:

1. DISCONNECT SAW FROM POWER!

2. Tilt blade to 0°, then use an adjustable square to measure distance from miter slot to a carbide tip on blade, as shown in **Figure 115**. Make sure that face of adjustable square is even along miter slot.

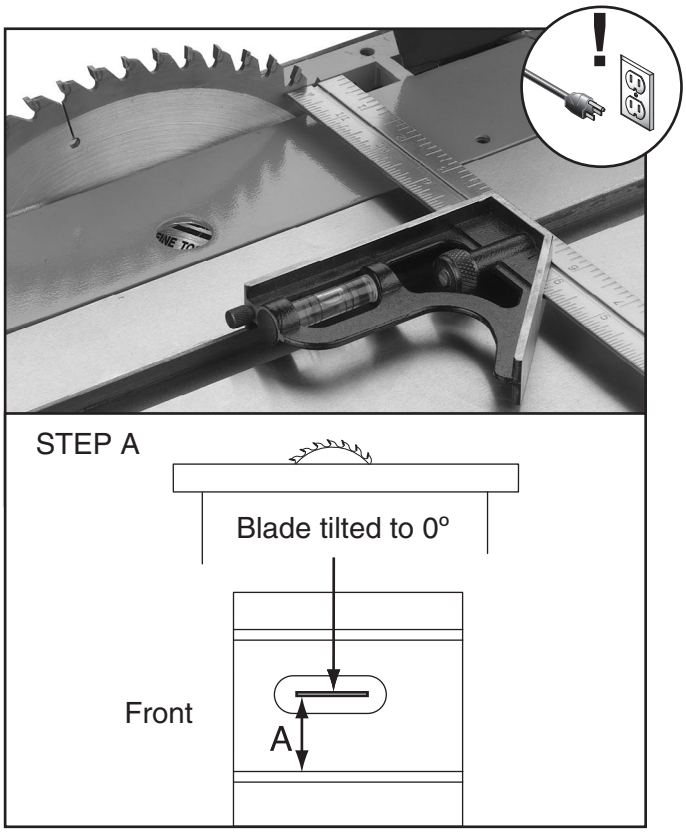

Figure 115. Example of adjusting blade to miter slot.

3. With end of adjustable square just touching tip, lock square in place. Now, mark carbide tip with a marker where you made this measurement.

⚠CAUTION

The saw blade is sharp. Use extra care or wear gloves when handling the blade or working near it.

4. Rotate marked blade tip to other end of table insert.

5. Slide adjustable square down to other end of table insert and compare distance from marked blade tip to end of adjustable square, as shown in **Figure 116**.

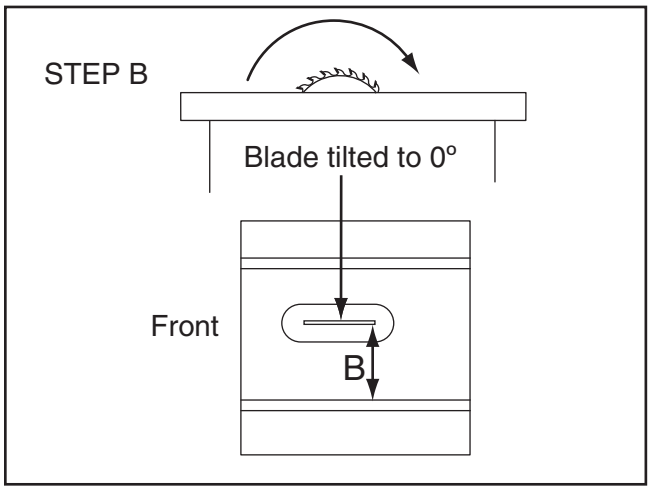

Figure 116. Measuring distance from miter slot to carbide tip on opposite side of table insert.

— If blade tip measurement is *same* on both sides, go to **Step 8**.

— If blade tip *does not* touch end of adjustable square similar to first measurement, table will need to be adjusted. Proceed to **Step 6**.

6. Loosen (4) table mounting bolts securing table top to base (see **Figure 117**), and lightly tap table in direction needed to square table to blade.

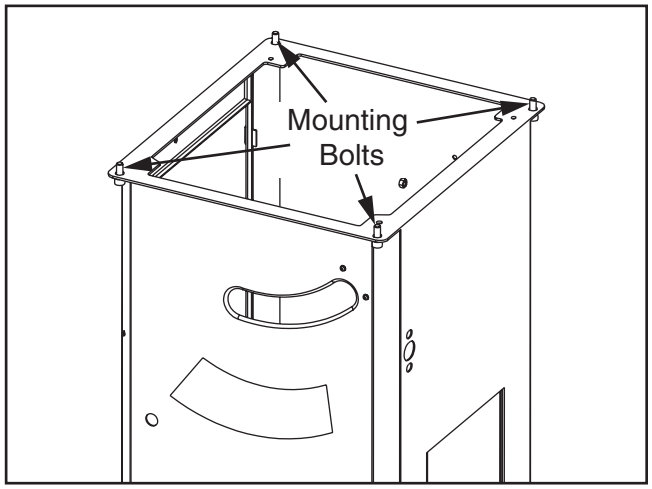

Figure 117. Location of table mounting bolts (table omitted for clarity).

7. Repeat **Steps 2–6** until blade and miter slot are parallel, then retighten table mounting bolts.

8. Tilt blade to 45° and recheck miter slot-to-blade parallelism.

   — If blade is still parallel with miter slot, no additional adjustments need to be made.

   — If blade is parallel with miter slot at 0° but not at 45°, one end of table will need to be shimmed higher with metal shim stock. Continue to **Step 9**.

9. Loosen (4) table mounting bolts from **Step 6**.

10. Refer to **Figure 118**–**Figure 119** for shim placement. If distance A is shorter than B, shim(s) will need to be placed under corners #1 and #2. If distance of B is shorter than A, shim(s) will need to be placed under corners #3 and #4. Very thin shim stock works well.

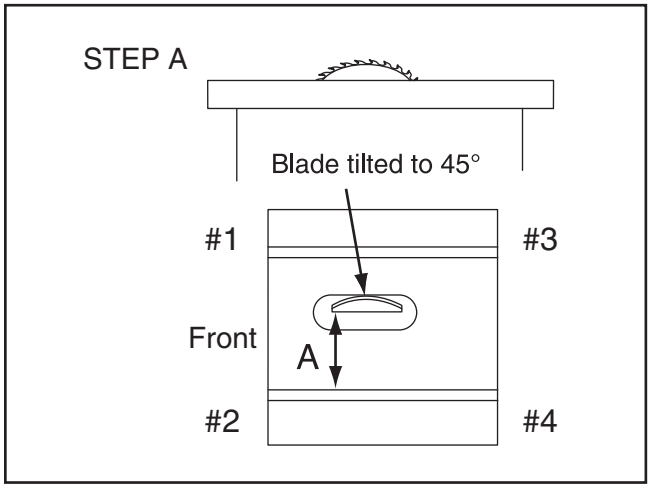

Figure 118. Shim procedure diagram A.

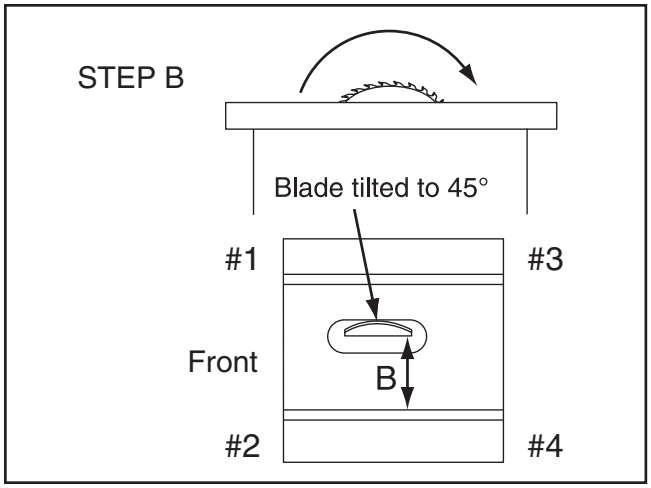

Figure 119. Shim procedure diagram B.

11. Tighten one table mounting bolt a small amount and then repeat with the others, tightening each down the same amount. Continue this process with all the bolts, tightening them a little each time until they are all secure.

12. Now recheck blade to miter slot at 0° and 45° by repeating **Steps 2–5**.

— If distance of A and B *are* equal, continue to **Step 13**.

— If distances *are not* equal, repeat **Steps 9–12**.

13. Once miter slot is adjusted to blade, recheck all measurements and be sure table mounting bolts are secure.

Note: *If you remove the table in the future, note the shim placement and reassemble them exactly how they came apart.*

Spreader or Riving Knife Alignment

Checking Alignment

The blade guard spreader and riving knife must be aligned with the blade when installed. If the spreader/riving knife is not aligned with the blade, then the workpiece will before forced sideways during the cut, which will increase the risk of kickback.

Tools Needed	**Qty**
Straightedge	1

To check spreader/riving knife alignment:

1. DISCONNECT MACHINE FROM POWER!

2. Raise saw blade to maximum height so you have easy working access.

3. Place straightedge against side of blade and spreader/riving knife at top and bottom, as shown in **Figure 120**. Spreader/riving knife should be parallel with blade along its length at both positions, and in "Alignment Zone," as shown in **Figure 121**.

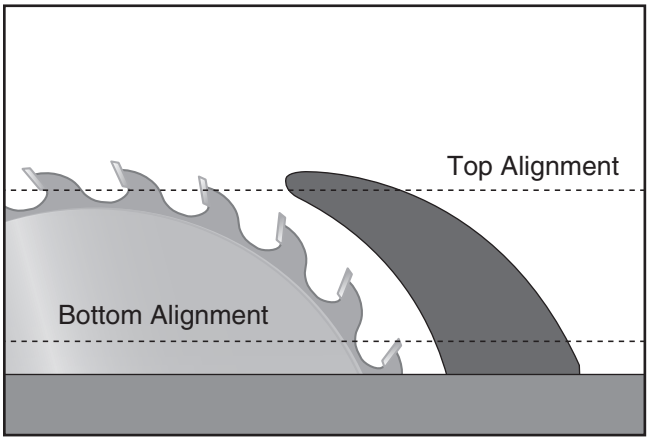

Figure 120. Checking top and bottom riving knife parallelism with blade.

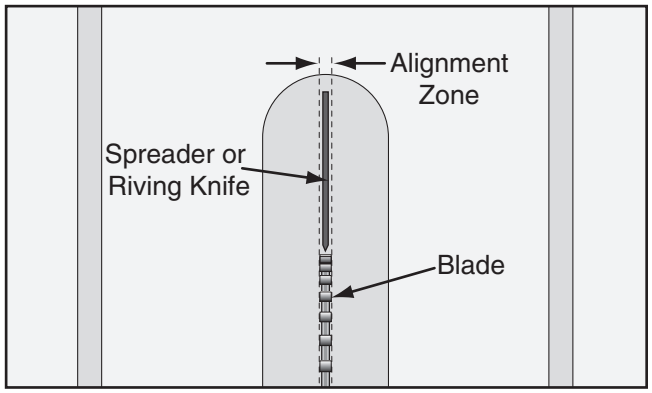

Figure 121. Spreader/riving knife alignment zone.

— If spreader/riving knife *is not* parallel with blade and inside alignment zone, then it needs to be adjusted. Proceed to **Adjusting Alignment** instructions.

— If spreader/riving knife *is not* parallel with the blade at either the top or bottom, it may be bent.

4. Remove spreader/riving knife and place it on flat surface and check to see if spreader/riving knife lays evenly along its length.

— If spreader/riving knife does not lay evenly, proceed to **Adjusting Bent Spreader/ Riving Knife** on **Page 70**.

Adjusting Alignment

The spreader/riving knife mounting position can be adjusted into alignment with the blade using the set screws on the spreader/riving knife adjustment block.

Tool Needed **Qty**
Hex Wrench 3mm..... 1

To adjust spreader/riving knife position:

1. DISCONNECT MACHINE FROM POWER!

2. Loosen cap screws and wing nut on adjustment block, then adjust top or bottom set screws or side control set screws (see **Figure 122**) to move block in needed direction.

Note: *Set screws are accessible through clamping plate. Clamping plate does not need to be removed to make adjustment.*

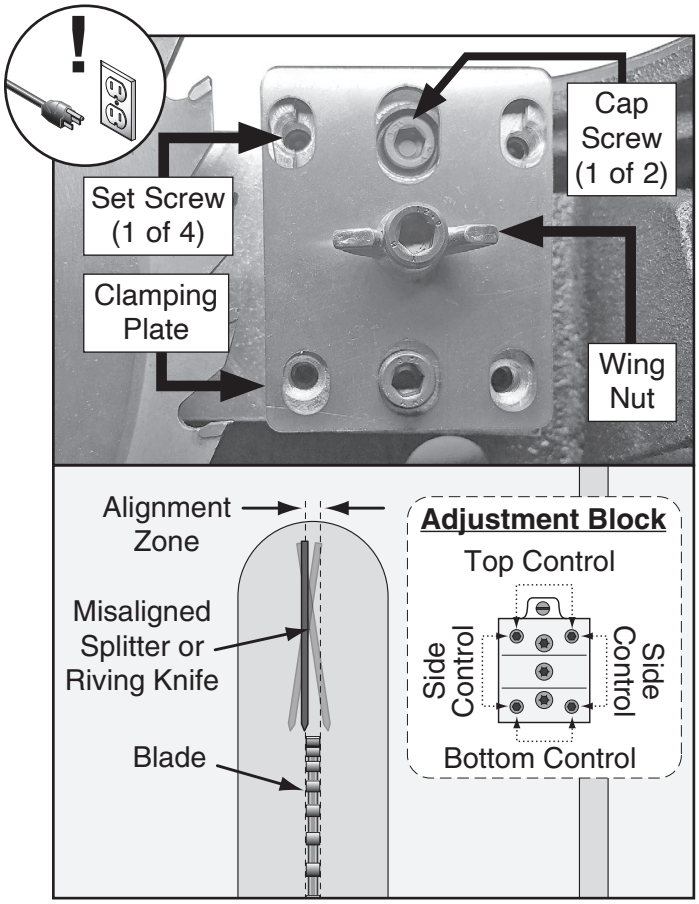

Figure 122. Set screws for adjusting spreader/ riving knife position.

Top and Bottom Control: To move the top of the spreader/riving knife right or left (and the bottom of the spreader/riving knife in the opposite direction), adjust the top and bottom pair of set screws on the adjustment block an equal amount in the opposite direction.

Side Control: To move the front of the spreader/riving knife left or right (and the rear of the spreader/riving knife in the opposite direction), adjust each pair of side control set screws an equal amount in the opposite direction.

Note: *To adjust how tightly mounting block holds spreader/riving knife, adjust center screw.*

3. Follow **Checking Alignment**, **Steps 1–3**.

   — If spreader/riving knife *is* in alignment zone, no additional steps are necessary.

   — If spreader/riving knife is still *not* in alignment zone, continue adjusting set screws on mounting block as necessary to correctly position spreader/riving knife.

4. Tighten (2) cap screws on mounting block to secure spreader/riving knife adjustment.

Adjusting Bent Spreader/Riving Knife

1. DISCONNECT MACHINE FROM POWER!

2. Bend spreader or riving knife by hand while installed, then follow **Steps 1–3** in **Checking Alignment** on **Page 68** to determine if it is parallel with blade and inside "Alignment Zone" (refer to **Figure 120** of **Checking Alignment** on **Page 68**).

   — If this does not work, remove it to straighten.

   — If you cannot straighten it properly, replace it.

Fence Adjustments

There are four main adjustments for the fence: height off the table, squareness, parallelism with the miter slot, and clamping pressure. These adjustments are interconnected and some repetition may be needed when adjusting.

Tools Needed	Qty
Hex Wrench 6mm	1
Square	1
Felt-Tipped Marker	1

Height and Square

The fence should be adjusted high enough off the table so that it does not drag across the surface or allow wood chips to get caught between the fence and table. Also, the fence face must be square to the table in order to produce accurate cuts.

To check/adjust fence height and squareness to table:

1. DISCONNECT MACHINE FROM POWER!

2. Remove fence from saw and place it on a flat surface.

3. Back out rear set screws until they are just threaded into fence flange (see **Figure 123**).

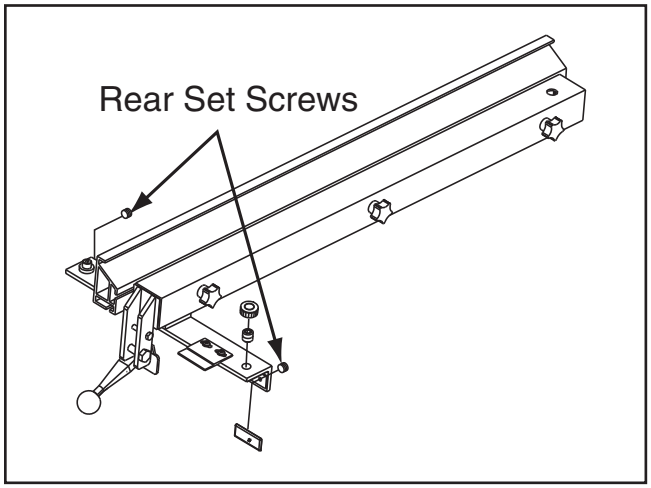

Figure 123. Location of screws used to adjust fence parallelism and clamping pressure.

4. Install fence onto table, then loosen fence knobs (see **Figure 124**), pull fence up from center, and tighten each knob.

5. Loosen top lock nuts on fence flange and lock nut on rear rail foot, shown in **Figure 124**.

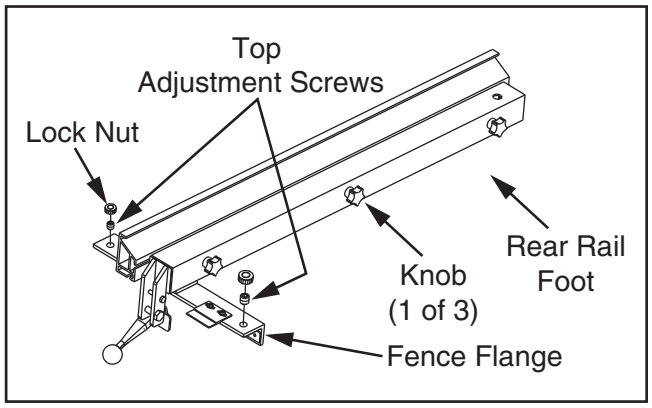

Figure 124. Fence components used to adjust fence height and squareness to table.

6. Turn top adjustment screws and rear foot screw so there is approximately 1/16" clearance between bottom of fence and table, front-to-back and side-to-side, then tighten lock nuts.

7. Place square on table and against face of fence, as shown in **Figure 125**, to check if fence is square to table.

   — If fence *is* square to table, proceed to **Parallelism & Clamping Pressure**.

   — If fence *is not* square to the table, proceed to **Step 8**.

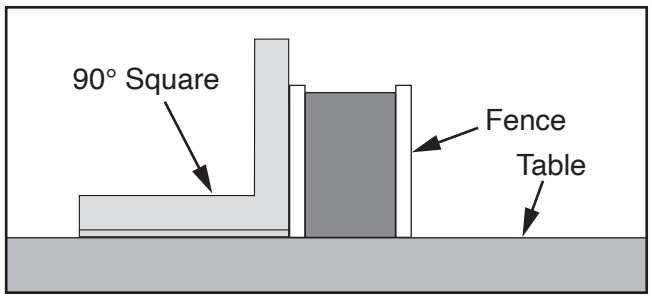

Figure 125. Checking if fence is square to table.

8. Loosen top lock nuts and adjust top screws (see **Figure 124**) to make fence face 90° to table, then tighten lock nuts.

Parallelism & Clamping Pressure

The rear set screws control the position of the fence in relation to the blade and the clamping pressure of the fence. Before starting this procedure, make sure the blade is parallel with the miter slot.

To adjust fence parallelism and clamping pressure:

1. DISCONNECT MACHINE FROM POWER!

2. Lock fence, tap front side with your fist, and check to see if it moved sideways over table.

   — If fence did *not* move, proceed to **Step 5**.

   — If fence moved, remove it from table and proceed to **Step 3**.

3. Turn each rear set screw one-sixth of a turn (see **Figure 123** on **Page 70**). Glide pads on fence flange should just touch fence tube.

4. Re-install fence and repeat **Step 2**.

5. Slide fence against right-hand edge of miter slot and lock it in place (see **Figure 126**).

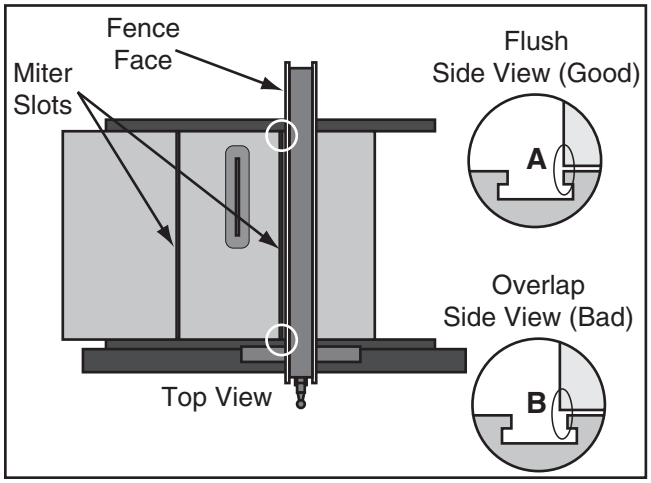

Figure 126. Example of aligning fence to miter slot.

6. Examine how fence lines up with miter slot along its length.

   — If fence and miter slot are flush from front to rear, fence is parallel and no further steps are required.

   — If rear of fence overlaps miter slot, as shown in **Figure 126**, fence is misaligned. Proceed to **Step 7**.

7. Remove fence, then alternately loosen and tighten rear fence set screws in equal amounts until fence is parallel with miter slot.

Optional Offset Fence Adjustment

Some woodworkers prefer to offset the rear of the fence 1/64" from the blade, as shown in **Figure 127**, to help prevent the workpiece from binding and burning.

This offset adjustment can reduce the chance of kickback by alleviating binding that may occur between blade and fence. The trade-off is slightly less accurate cuts.

To offset fence:

1. DISCONNECT MACHINE FROM POWER!

2. With a felt tip pen, mark one saw tooth and rotate blade so this tooth is positioned at back of table insert.

3. Place and clamp fence on table.

4. Measure distance between tooth and fence face, as shown in **Figure 127**.

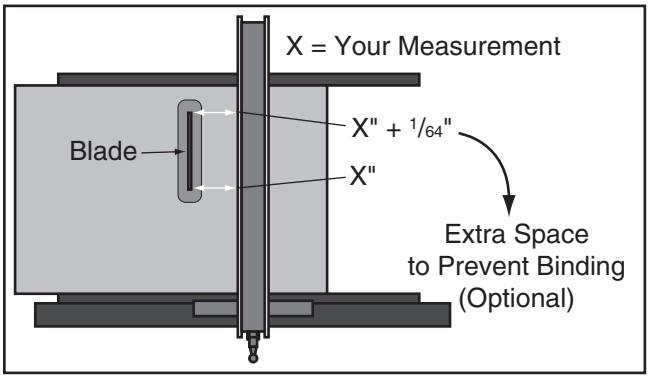

Figure 127. Adjusting fence with a 1/64" offset.

5. Remove fence, and adjust rear set screws to achieve an offset of 1/64" between marked tooth and fence face.

6. Re-install fence and measure distance again between marked tooth and fence face. The rear measurement should be 1/64" greater than previously measured in **Step 4**.

Fence Scale Calibration

The fence scale indicator window, shown in **Figure 128**, can be calibrated with the fence scale if you notice that your cuts do not accurately match what is shown on the fence scale.

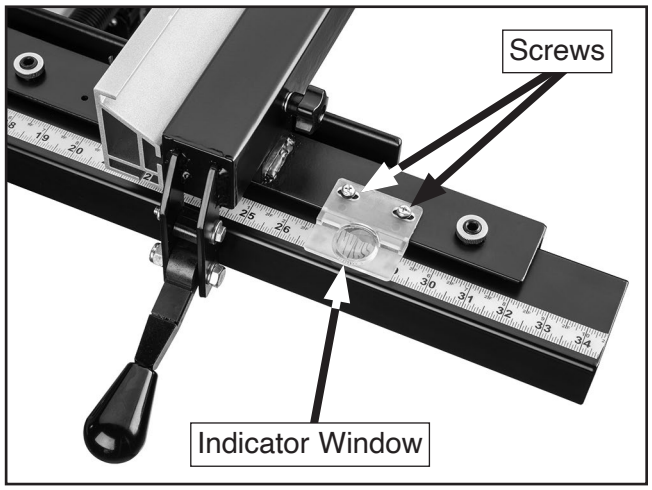

Figure 128. Fence indicator window.

The indicator adjusts by loosening the two mounting screws and sliding it in the desired direction.

Tools Needed	**Qty**
Hex Wrench 3mm	1
Scrap Piece of Wood	1
Tape Measure	1

To calibrate fence scale indicator windows:

1. Position and lock fence at 13", as indicated by scale, then cut your scrap piece of wood.

2. Reposition and lock fence at 12", as indicated by scale.

3. Flip your scrap piece of wood over, placing side that was cut in **Step 2** against fence, and cut your scrap piece of wood.

4. Measure width of freshly cut workpiece with tape measure. Workpiece width should be exactly 12". If it is not, then adjust indicator window to match the width of workpiece.

Table/Dado Insert Adjustment

The table/dado insert must sit perfectly flush with the table to provide a smooth, continuous surface for the workpiece to slide over. The insert is held in place by one mounting screw, and sits on top of four adjustment screws (see **Figure 129**). The insert should be checked and adjusted any time it is removed, after prolonged use, or when the workpiece does not slide smoothly across the table and insert.

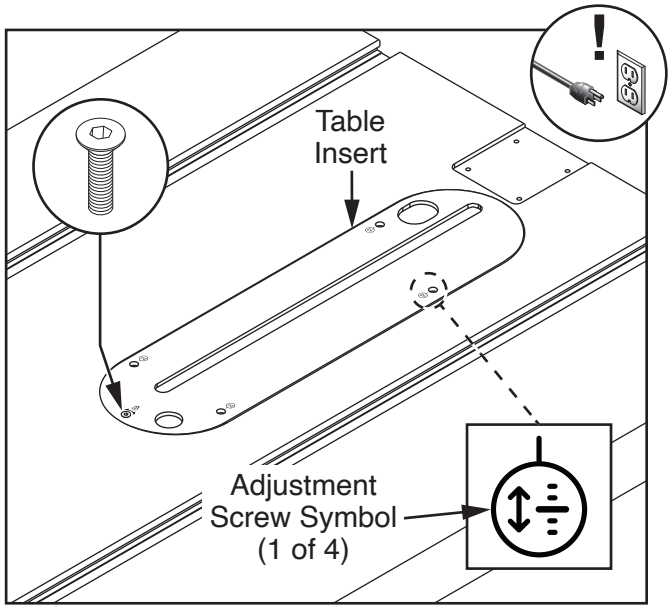

Figure 129. Table insert adjustment components.

Tools Needed	**Qty**
Hex Wrench 3mm	1
Straightedge	1

To adjust table/dado insert:

1. DISCONNECT MACHINE FROM POWER!

2. Place straightedge across insert and verify insert is flush with table.

   — If insert *is* flush with table, no adjustments are necessary.

   — If insert *is not* flush with table, proceed to **Step 3**.

3. Remove (1) mounting screw from location shown in **Figure 129**.

   IMPORTANT: Mounting screw location is marked with a lock symbol (🔒).

4. Insert hex wrench through (4) holes marked with adjustment screw symbol (see **Figure 129**) and either tighten screws to raise insert, or loosen screws to lower insert until it is flush with table.

5. Install mounting screw removed in **Step 3** and gently tighten until snug.

   IMPORTANT: Do not overtighten mounting screw! Overtightening may distort flushness of insert with table.

6. Repeat **Step 2** to verify insert remains flush with table after securing with mounting screw.

Miter Gauge Adjustments

The miter gauge can be adjusted so it is perpendicular to the blade and snug in the T-slot.

Tools Needed	Qty
90° Square	1
45° Square	1
Hex Wrench 2mm	1
Hex Wrench 2.5mm	1
Hex Wrench 4mm	1

Checking/Setting 90° Stops

1. DISCONNECT MACHINE FROM POWER!

2. Slide miter gauge into T-slot on table.

3. Loosen miter gauge lock knob and pivot miter gauge body to 90° position (see **Figure 130**).

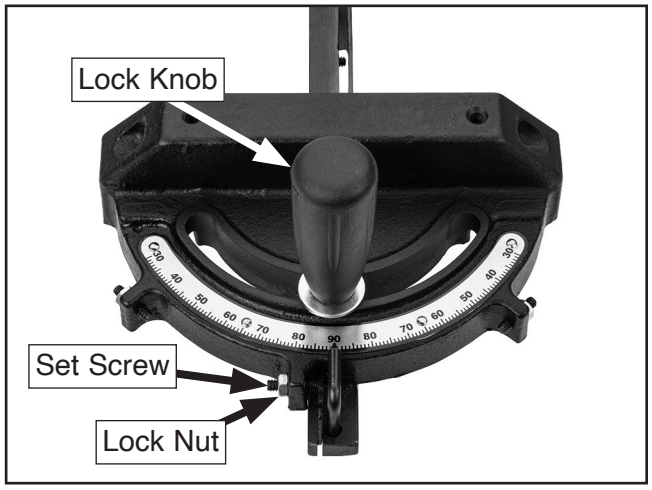

Figure 130. Screws for adjusting miter stops.

4. Place square evenly against face of miter gauge and blade, as shown in **Figure 131**.

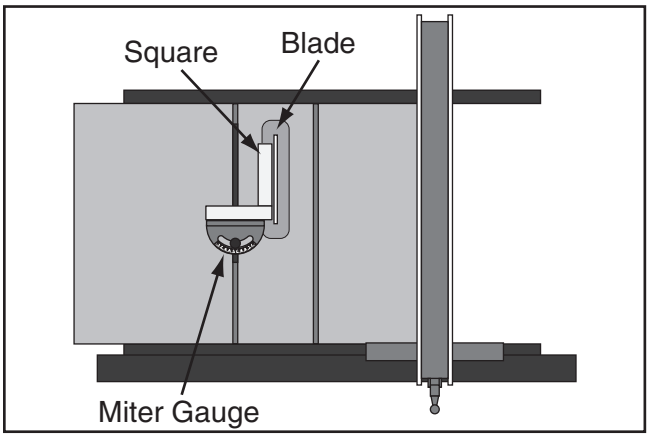

Figure 131. Checking 90° stop on miter gauge.

— If square touches miter body and body of blade (not the teeth) evenly at same time, then it is square to blade and 90° stop is set correctly. No further adjustments are necessary.

— If square *does not* touch miter body and blade body evenly at same time, then proceed to **Step 5**.

5. Loosen lock nut on 90° set screw (see **Figure 130**), then adjust set screw until miter body is flush with square. Tighten lock nut.

6. Adjust pointer by hand to point at 90°.

Adjusting Miter Bar Tightness

The miter bar can be adjusted so it fits more tightly in the miter slot. To adjust the miter bar tightness, adjust the set screws shown in **Figure 132** as needed. Bar should slide with little resistance.

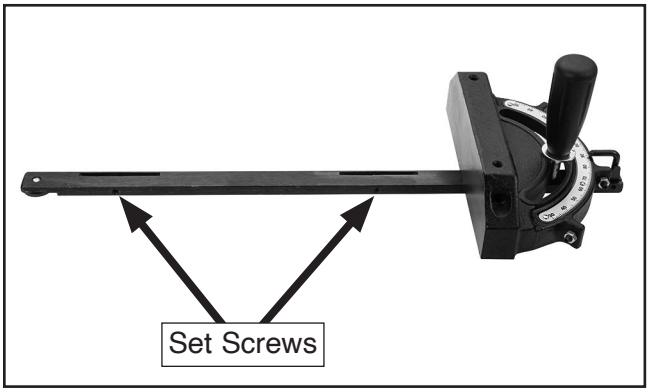

Figure 132. Set screws for adjusting miter bar tightness in miter slot.

Belt Tension & Replacement

The drive belt stretches slightly as the saw is used. Most of the belt stretching will happen during the first 16 hours of use, but it may continue through continued use. If you notice that the belt is slipping, it will need to be tensioned. If the belt is cracked, frayed, or shows other signs of excessive wear, it will need to be replaced.

Tools Needed	Qty
Hex Wrench 6mm	1

Tensioning Belt

1. DISCONNECT MACHINE FROM POWER!

2. Raise blade completely, then open the motor door.

3. Loosen cap screw on motor shown in **Figure 133**, and pivot motor up and down to make sure that it is movable.

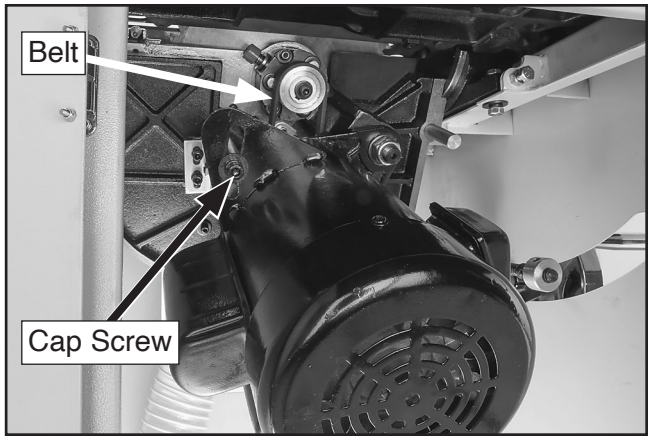

Figure 133. Location of cap screw for adjusting belt tension.

4. Press down on motor with one hand to keep belt tension tight and tighten cap screw.

5. Press belt in center to check belt tension. The belt is correctly tensioned when there is approximately ¼" deflection when it is pushed with moderate pressure, as shown in **Figure 134**.

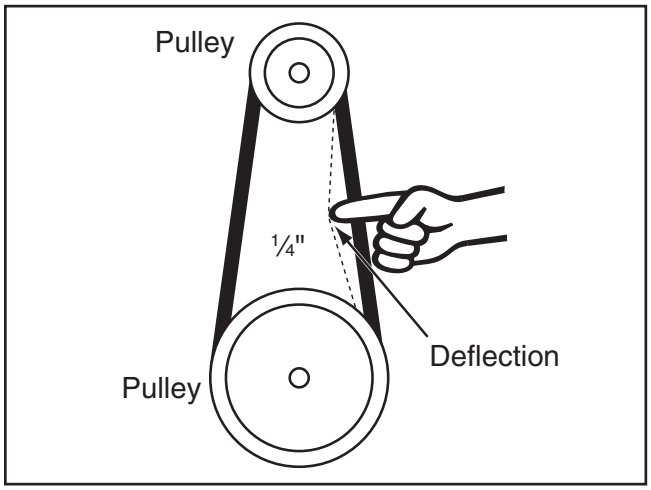

Figure 134. Checking belt tension.

   — If there is more than ¼" deflection when belt is pushed with moderate pressure, loosen cap screw, push motor downward, then tighten cap screw.

6. Close motor door.

Replacing Belt

1. DISCONNECT MACHINE FROM POWER!

2. Raise blade completely, then open motor door.

3. Loosen cap screw that secures motor (see **Figure 133**) and lift motor fully to remove tension on belt. Tighten cap screw to hold motor in this position, then roll belt off of the arbor and motor pulleys.

4. Install new belt onto pulleys, loosen cap screw, then lower motor.

5. Press down on motor with one hand to keep belt tension tight and tighten cap screw.

6. Follow **Step 5** in the **Tensioning Belt** subsection on this page to check V-belt tension.

7. Close motor door.

SECTION 9: WIRING

These pages are current at the time of printing. However, in the spirit of improvement, we may make changes to the electrical systems of future machines. Compare the manufacture date of your machine to the one stated in this manual, and study this section carefully.

If there are differences between your machine and what is shown in this section, call Technical Support at (570) 546-9663 for assistance BEFORE making any changes to the wiring on your machine. An updated wiring diagram may be available. **Note:** *Please gather the serial number and manufacture date of your machine before calling. This information can be found on the main machine label.*

⚠WARNING
Wiring Safety Instructions

SHOCK HAZARD. Working on wiring that is connected to a power source is extremely dangerous. Touching electrified parts will result in personal injury including but not limited to severe burns, electrocution, or death. Disconnect the power from the machine before servicing electrical components!

MODIFICATIONS. Modifying the wiring beyond what is shown in the diagram may lead to unpredictable results, including serious injury or fire. This includes the installation of unapproved aftermarket parts.

WIRE CONNECTIONS. All connections must be tight to prevent wires from loosening during machine operation. Double-check all wires disconnected or connected during any wiring task to ensure tight connections.

CIRCUIT REQUIREMENTS. You MUST follow the requirements at the beginning of this manual when connecting your machine to a power source.

WIRE/COMPONENT DAMAGE. Damaged wires or components increase the risk of serious personal injury, fire, or machine damage. If you notice that any wires or components are damaged while performing a wiring task, replace those wires or components.

MOTOR WIRING. The motor wiring shown in these diagrams is current at the time of printing but may not match your machine. If you find this to be the case, use the wiring diagram inside the motor junction box.

CAPACITORS/INVERTERS. Some capacitors and power inverters store an electrical charge for up to 10 minutes after being disconnected from the power source. To reduce the risk of being shocked, wait at least this long before working on capacitors.

EXPERIENCING DIFFICULTIES. If you are experiencing difficulties understanding the information included in this section, contact our Technical Support at (570) 546-9663.

NOTICE

The photos and diagrams included in this section are best viewed in color. You can view these pages in color at www.grizzly.com.

COLOR KEY

BLACK	Bk	BLUE	Bl	YELLOW	Yl	LIGHT BLUE	Lb
WHITE	Wt	BROWN	Br	YELLOW GREEN	Yg	BLUE WHITE	Bw
GREEN	Gn	GRAY	Gy	PURPLE	Pu		
RED	Rd	ORANGE	Or	PINK	Pk	TURQUOISE	Tu

Wiring Diagram

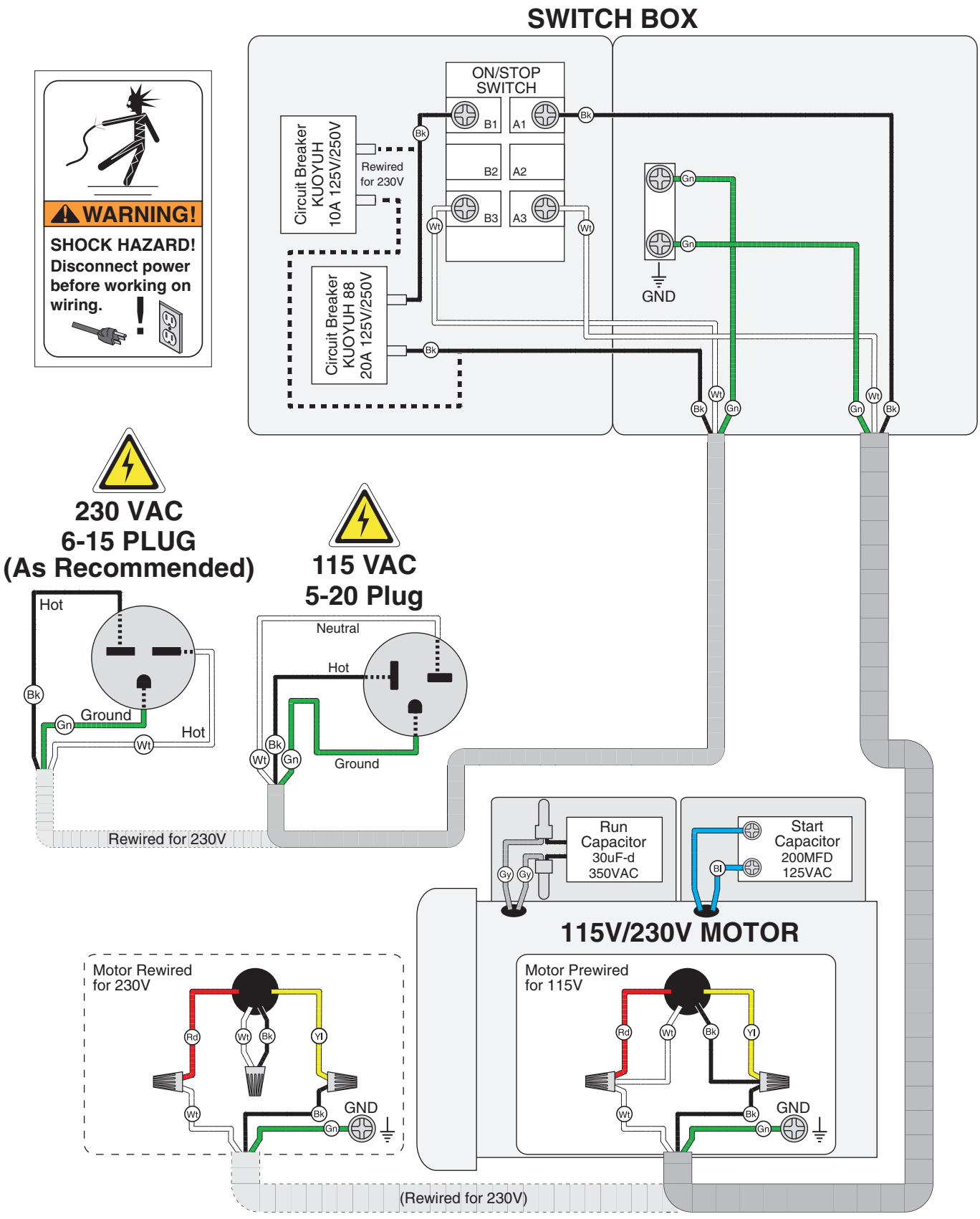

STOP

READ WIRING SAFETY ON PAGE 77!

Electrical Components

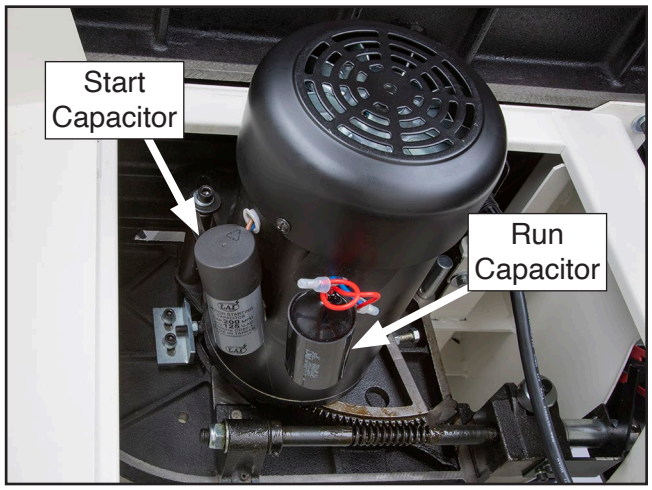

Figure 135. Motor capacitors.

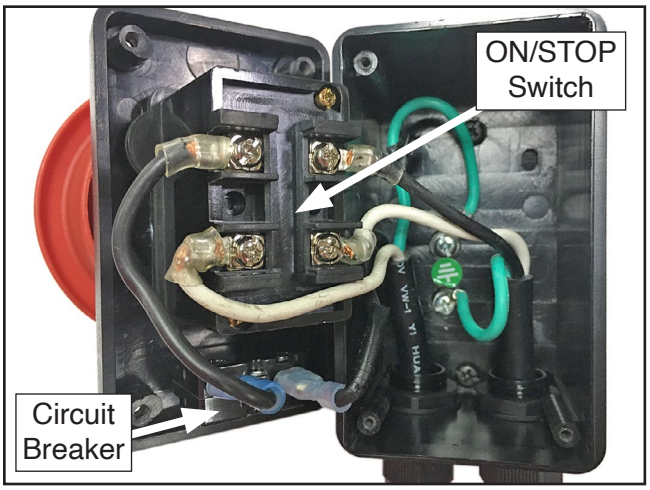

Figure 137. Switch box wiring and components.

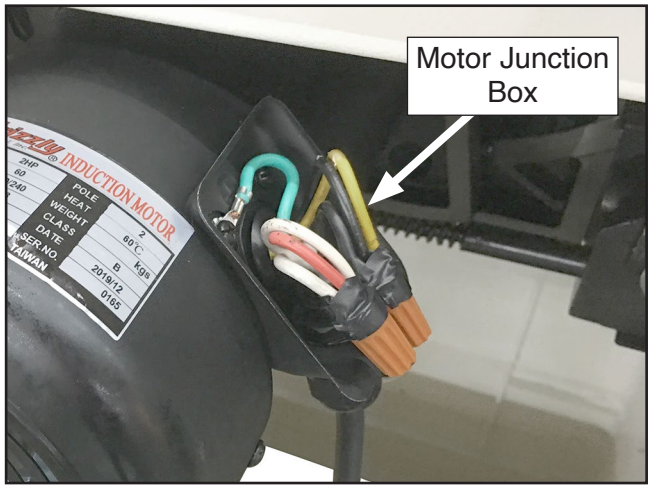

Figure 136. Motor junction box.

SECTION 10: PARTS

We do our best to stock replacement parts when possible, but we cannot guarantee that all parts shown are available for purchase. Call **(800) 523-4777** or visit **www.grizzly.com/parts** to check for availability.

Body

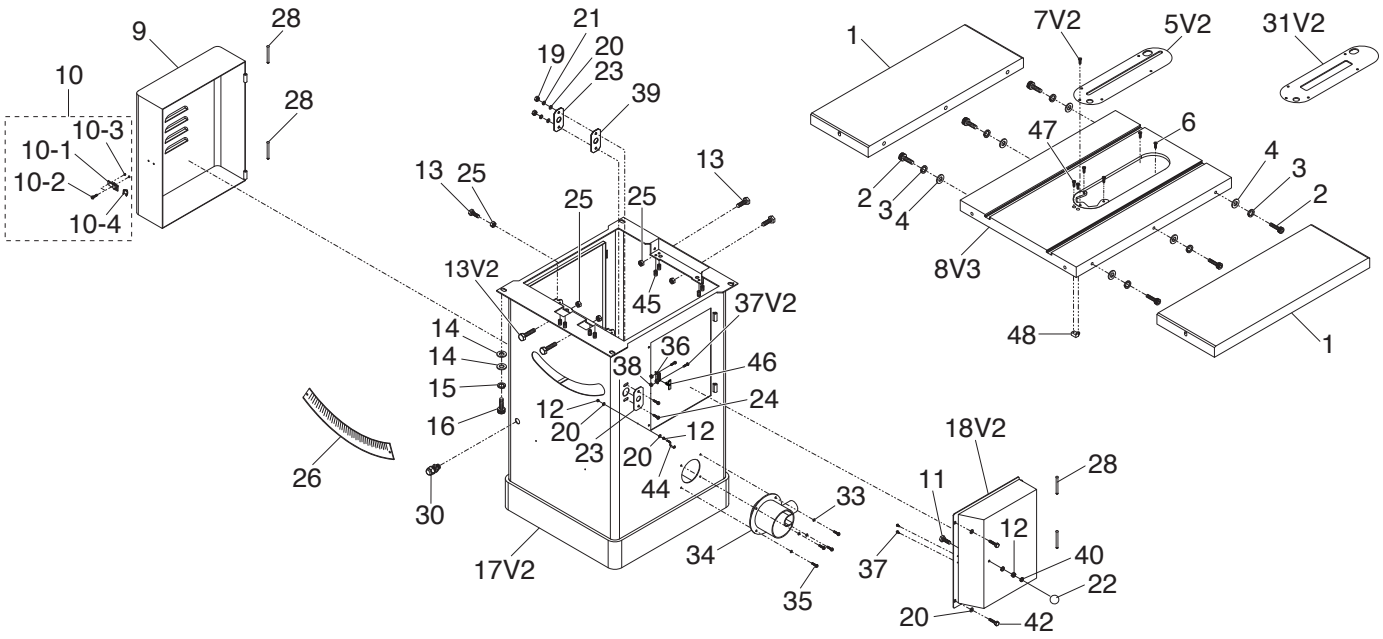

REF	PART #	DESCRIPTION
1	P0899001	EXTENSION WING
2	P0899002	CAP SCREW M10-1.5 X 30
3	P0899003	LOCK WASHER 10MM
4	P0899004	FLAT WASHER 10MM
5V2	P0899005V2	TABLE INSERT (STANDARD) V2.02.26
6	P0899006	FLAT HD CAP SCR M5-.8 X 10
7V2	P0899007V2	FLAT HD CAP SCR M5-.8 X 15 V2.02.26
8V3	P0899008V3	MAIN TABLE V3.02.26
9	P0899009	MOTOR ACCESS DOOR
10-1	P0899010-1	DRAW LATCH STRIKE
10-2	P0899010-2	PHLP HD SCR 8-32 X 3/8
10-3	P0899010-3	HEX NUT 8-32
10-4	P0899010-4	DRAW LATCH HOOK
11	P0899011	HEX BOLT 1/4-20 X 3/4
12	P0899012	HEX NUT 1/4-20
13	P0899013	HEX BOLT M8-1.25 X 25
13V2	P0899013V2	HEX BOLT M8-1.25 X 45 V2.10.20
14	P0899014	FLAT WASHER 8MM
15	P0899015	LOCK WASHER 8MM
16	P0899016	CAP SCREW M8-1.25 X 25
17V2	P0899017V2	CABINET V2.10.20
18V2	P0899018V2	CABINET ACCESS DOOR V2.10.20
19	P0899019	HEX NUT M5-.8
20	P0899020	FLAT WASHER 5MM
21	P0899021	LOCK WASHER 5MM

REF	PART #	DESCRIPTION
22	P0899022	KNOB 1/4-20, D1-1/16, BALL
23	P0899023	LEADSCREW BRACKET 18MM ID
24	P0899024	BUTTON HD CAP SCR M5-.8 X 20
25	P0899025	LOCK NUT M8-1.25
26	P0899026	TILT SCALE
28	P0899028	HINGE PIN
30	P0899030	STRAIN RELIEF TYPE-3 M16-1.5
31V2	P0899031V2	TABLE INSERT (DADO) V2.02.26
33	P0899033	FLAT WASHER 6MM
34	P0899034	DUST PORT 4" X 1-1/2"
35	P0899035	BUTTON HD CAP SCR M5-.8 X 12
36	P0899036	GRAB CATCH
37	P0899037	TAP SCREW #5 X 1/4
37V2	P0899037V2	PHLP HD SCR #5-40 X 1/4 V2.10.20
38	P0899038	HEX NUT 5-40
39	P0899039	LEADSCREW BRACKET 23MM ID
40	P0899040	LOCK WASHER 1/4
41	P0899041	SET SCREW M5-.8 X 10
42	P0899042	HEX BOLT M5-.8 X 10
44	P0899044	PUSH LOCK BRACKET
45	P0899045	SET SCREW M6-1 X 10
46	P0899046	STRIKE LATCH
47	P0899047	FLAT HD SCR 10-24 X 3/4
48	P0899048	INSERT MOUNTING BRACKET

BUY PARTS ONLINE AT GRIZZLY.COM!
Scan QR code to visit our Parts Store.

Trunnion

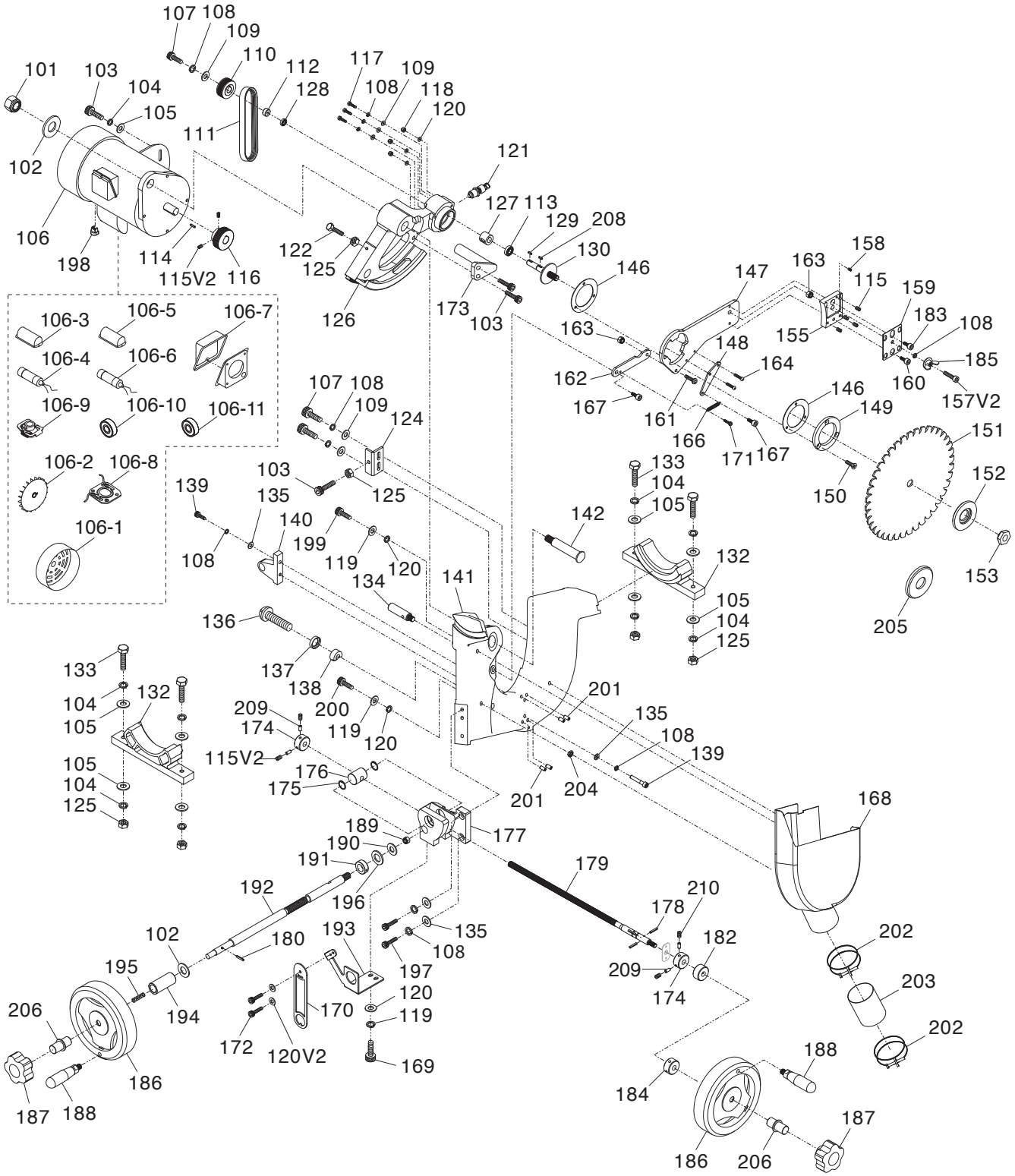

BUY PARTS ONLINE AT GRIZZLY.COM!
Scan QR code to visit our Parts Store.

Trunnion Parts List

REF	PART #	DESCRIPTION
101	P0899101	LOCK NUT M16-2
102	P0899102	FLAT WASHER 5/8
103	P0899103	CAP SCREW M8-1.25 X 20
104	P0899104	LOCK WASHER 8MM
105	P0899105	FLAT WASHER 8MM
106	P0899106	MOTOR 2HP 110/220V 1-PH
106-1	P0899106-1	MOTOR FAN COVER
106-2	P0899106-2	MOTOR FAN
106-3	P0899106-3	START CAPACITOR COVER
106-4	P0899106-4	S CAPACITOR 200M 125V 1-1/2 X 2-3/4
106-5	P0899106-5	RUN CAPACITOR COVER
106-6	P0899106-6	R CAPACITOR 30M 350V 1-1/2 X 2-3/8
106-7	P0899106-7	MOTOR JUNCTION BOX
106-8	P0899106-8	CONTACT PLATE 63 X 63MM
106-9	P0899106-9	CENTRIFUGAL SWITCH M14-2
106-10	P0899106-10	BALL BEARING 6204ZZ (FRONT)
106-11	P0899106-11	BALL BEARING 6202ZZ (REAR)
107	P0899107	CAP SCREW M6-1 X 16
108	P0899108	LOCK WASHER 6MM
109	P0899109	FLAT WASHER 6MM
110	P0899110	ARBOR PULLEY
111	P0899111	POLY V-BELT 150PJ6
112	P0899112	BUSHING
113	P0899113	BALL BEARING 6203-2RS
114	P0899114	KEY 6 X 6 X 20
115	P0899115	SET SCREW M6-1 X 10
115V2	P0899115V2	SET SCREW M6-1 X 6 V2.10.20
116	P0899116	MOTOR PULLEY
117	P0899117	HEX BOLT M6-1 X 12
118	P0899118	LOCK NUT M5-.8
119	P0899119	LOCK WASHER 5MM
120	P0899120	FLAT WASHER 5MM
120V2	P0899120V2	FLAT WASHER 4MM V2.10.20
121	P0899121	ARBOR LOCK
122	P0899122	HEX BOLT M8-1.25 X 40
124	P0899124	BLADE HEIGHT LIMIT BLOCK
125	P0899125	HEX NUT M8-1.25
126	P0899126	MOTOR MOUNT
127	P0899127	ARBOR BUSHING
128	P0899128	BALL BEARING 6202-2RS
129	P0899129	KEY 5 X 5 X 15
130	P0899130	ARBOR
132	P0899132	TRUNNION
133	P0899133	HEX BOLT M8-1.25 X 45
134	P0899134	LIMIT BLOCK
135	P0899135	FLAT WASHER 6MM
136	P0899136	FLAT HD CAP SCR M10-1.5 X 45
137	P0899137	SPACER 16.5 X 24.5 X 5.5MM
138	P0899138	SPACER 10 X 33 X 11MM (NYLON)
139	P0899139	CAP SCREW M6-1 X 35
140	P0899140	SHAFT BRACKET
141	P0899141	MAIN TRUNNION
142	P0899142	MOTOR SHAFT M16-2 X 120
146	P0899146	GASKET
147	P0899147	SPREADER BRACKET
148	P0899148	SPRING BRACKET
149	P0899149	FLANGE RING

REF	PART #	DESCRIPTION
150	P0899150	FLAT HD CAP SCR M5-.8 X 50
151	P0899151	SAW BLADE 10" X 40T
152	P0899152	ARBOR FLANGE
153	P0899153	ARBOR NUT 5/8-12
155	P0899155	SPREADER ADJUSTMENT BLOCK
157V2	P0899157V2	CAP SCREW M6-1 X 30 V2.06.20
158	P0899158	SET SCREW M8-1.25 X 12 BALL-PT
159	P0899159	SPREADER CLAMPING PLATE
160	P0899160	CAP SCREW M6-1 X 25
161	P0899161	BUTTON HD CAP SCR M6-1 X 20
162	P0899162	CONNECTING PLATE
163	P0899163	LOCK NUT M6-1
164	P0899164	BUTTON HD CAP SCR M5-.8 X 16
166	P0899166	EXTENSION SPRING 1 X 7.2 X 68MM
167	P0899167	SHOULDER SCREW M6-1 X 15, 8 X 5
168	P0899168	DUST COLLECTION CASE
169	P0899169	CAP SCREW M5-.8 X 12
170	P0899170	POINTER
171	P0899171	BUTTON HD CAP SCR M5-.8 X 12
172	P0899172	BUTTON HD CAP SCR M4-.7 X 8
173	P0899173	MOTOR LOCATING SHAFT
174	P0899174	STOP COLLAR
175	P0899175	INT RETAINING RING 24MM
176	P0899176	TILT LEADSCREW NUT
177	P0899177	TILT LEADSCREW BASE
178	P0899178	ROLL PIN 4 X 16
179	P0899179	TILT LEADSCREW
180	P0899180	ROLL PIN 4 X 20
182	P0899182	BEARING WASHER 22 X 12 X 10MM
183	P0899183	CAP SCREW M6-1 X 16
184	P0899184	BEVELED BUSHING
185	P0899185	WING NUT M6-1
186	P0899186	HANDWHEEL TYPE-7 160D X 12B-N X M10-1.5
187	P0899187	KNOB M8-1.25, D60, 6-LOBE
188	P0899188	REVOLVING HANDLE 21 X 90, M10-1.5 X 12
189	P0899189	LOCK NUT M12-1.75
190	P0899190	FLAT WASHER 12MM
191	P0899191	COLLAR
192	P0899192	ELEVATION SHAFT
193	P0899193	POINTER BASE
194	P0899194	HANDWHEEL BUSHING
195	P0899195	COMPRESSION SPRING 1.2 X 15 X 36MM
196	P0899196	ELEVATION SHAFT SPACER 17 X 30 X 1MM
197	P0899197	CAP SCREW M6-1 X 20
198	P0899198	STRAIN RELIEF TYPE-3 M16-1.5
199	P0899199	CAP SCREW M5-.8 X 30
200	P0899200	CAP SCREW M5-.8 X 20
201	P0899201	SET SCREW M6-1 X 20
202	P0899202	HOSE CLAMP 3-1/4"
203	P0899203	CLEAR HOSE 3" X 26"
204	P0899204	HEX NUT M10-1.5
205	P0899205	ARBOR FLANGE (DADO)
206	P0899206	KNOB BUSHING
208	P0899208	KEY 5 X 5 X 10
209	P0899209	SPACER 4 X 2MM
210	P0899210	SET SCREW M6-1 X 6

BUY PARTS ONLINE AT GRIZZLY.COM!
Scan QR code to visit our Parts Store.

Power Switch

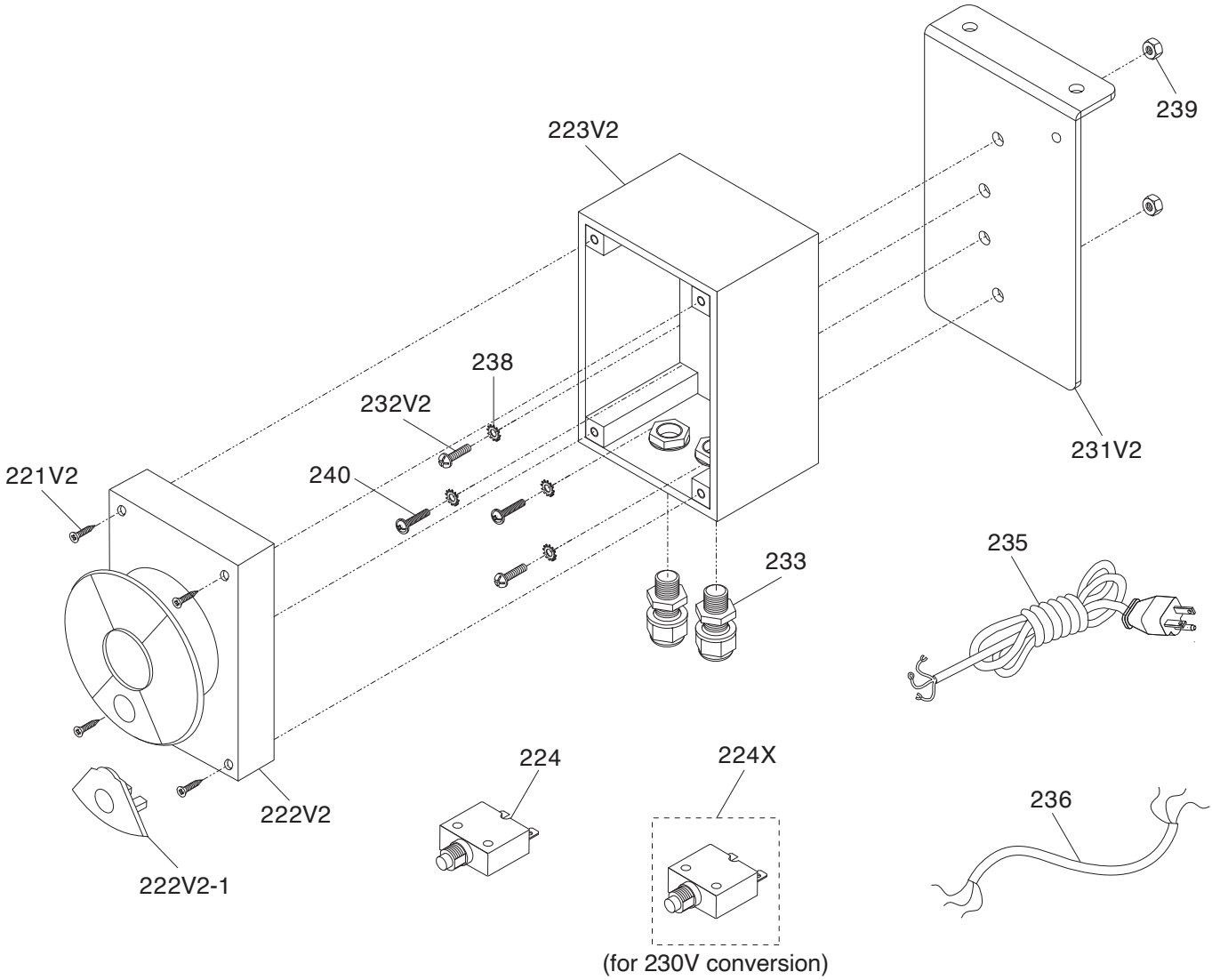

REF	PART #	DESCRIPTION
221V2	P0899221V2	TAP SCREW M3 X 20 V2.06.20
222V2	P0899222V2	PADDLE SWITCH UV03-006 V2.06.20
222V2-1	P0899222V2-1	LOCKOUT PIN (YELLOW)
223V2	P0899223V2	SWITCH BOX AP-9501B-205 JP950B V2.06.20
224	P0899224	CIRCUIT BREAKER 20A
224X	P0899224X	CIRCUIT BREAKER 10A
231V2	P0899231V2	SWITCH BRACKET V2.06.20

REF	PART #	DESCRIPTION
232V2	P0899232V2	PHLP HD SCR M5-.8 X 10 V2.06.20
233	P0899233	STRAIN RELIEF TYPE-3 PG11
235	P0899235	POWER CORD 14G 3W 72" 5-20P
236	P0899236	MOTOR CORD 14G 3W 32"
238	P0899238	EXT TOOTH WASHER 5MM
239	P0899239	HEX NUT M5-.8
240	P0899240	FLANGE SCREW M5-.8 X 10

BUY PARTS ONLINE AT GRIZZLY.COM!
Scan QR code to visit our Parts Store.

Blade Guard

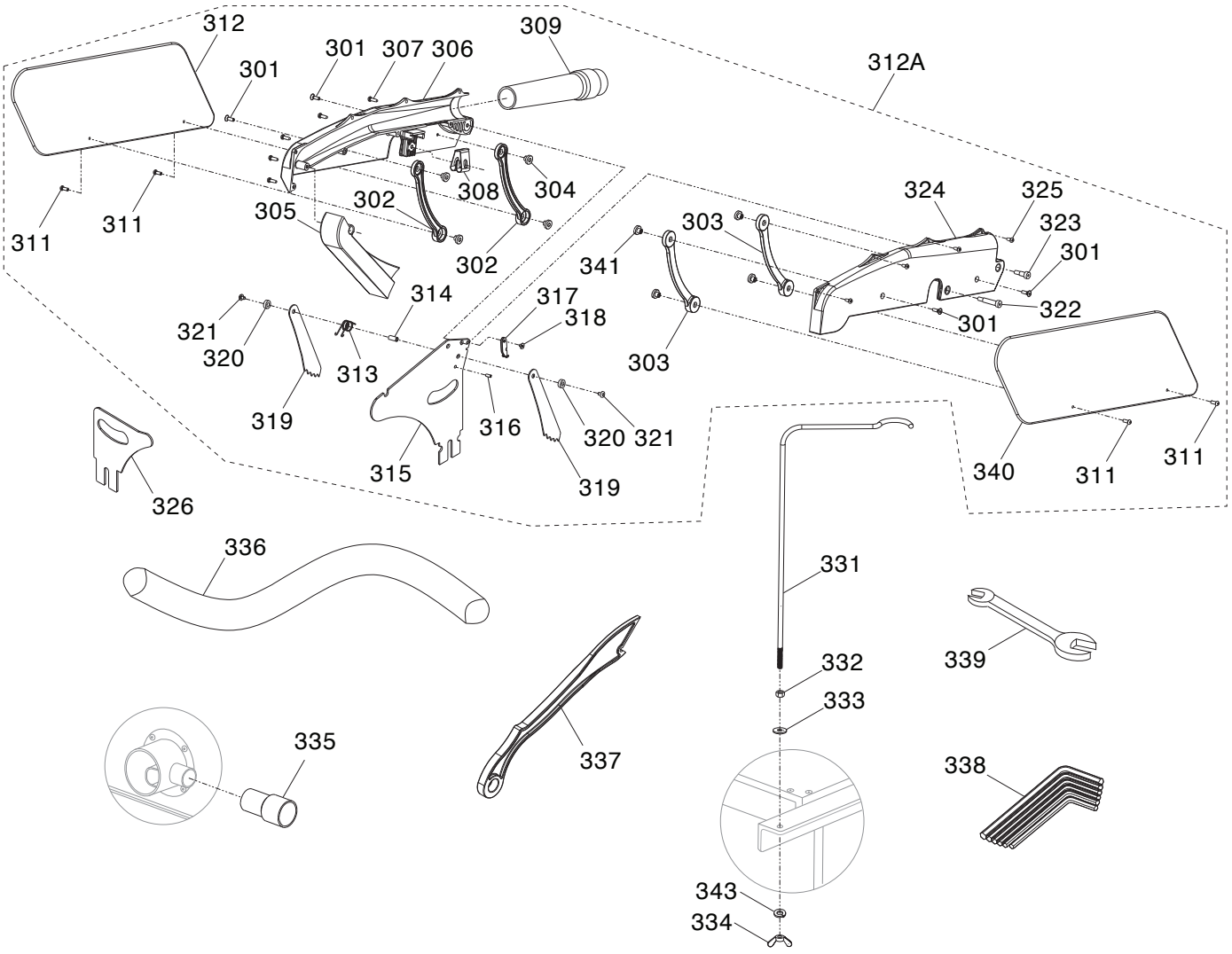

REF	PART #	DESCRIPTION
301	P0899301	FLAT HD CAP SCR M5-.8 X 10
302	P0899302	GUARD SUPPORT (LEFT)
303	P0899303	GUARD SUPPORT (RIGHT)
304	P0899304	FLANGE NUT M5-.8 X 9
305	P0899305	DUST CHUTE
306	P0899306	GUARD (LEFT)
307	P0899307	TAP SCREW M3.5 X 16
308	P0899308	SPRING CLAMP
309	P0899309	BLADE GUARD DUST PORT
311	P0899311	BUTTON HD CAP SCR M5-.8 X 10
312	P0899312	SIDE GUARD (LEFT)
312A	P0899312A	COMPLETE BLADE GUARD ASSY
313	P0899313	TORSION SPRING
314	P0899314	PAWL SHAFT
315	P0899315	SPREADER
316	P0899316	ROLL PIN 4 X 16
317	P0899317	PAWL RELEASE HOOK
318	P0899318	RIVET 4 X 6
319	P0899319	ANTI-KICKBACK PAWL

REF	PART #	DESCRIPTION
320	P0899320	SPACER 6 X 10 X 4MM
321	P0899321	BUTTON HD CAP SCR M4-.7 X 5
322	P0899322	SHOULDER SCREW M5-.8 X 10, 6 X 25
323	P0899323	SHOULDER SCREW M5-.8 X 10, 6 X 10
324	P0899324	GUARD (RIGHT)
325	P0899325	TAP SCREW M3 X 10
326	P0899326	RIVING KNIFE
331	P0899331	HOSE SUPPORT ARM
332	P0899332	HEX NUT M6-1
333	P0899333	FLAT WASHER 6MM
334	P0899334	WING NUT M6-1
335	P0899335	HOSE CONNECTOR 1-1/2"
336	P0899336	DUST HOSE 1-1/2" X 94"
337	P0899337	PUSH STICK
338	P0899338	HEX WRENCH SET 2.5-8MM 6-PC
339	P0899339	WRENCH 13 X 27MM OPEN-ENDS
340	P0899340	SIDE GUARD (RIGHT)
341	P0899341	FLANGE NUT M5-.8 X 6
343	P0899343	LOCK WASHER 6MM

BUY PARTS ONLINE AT GRIZZLY.COM!
Scan QR code to visit our Parts Store.

Miter Gauge

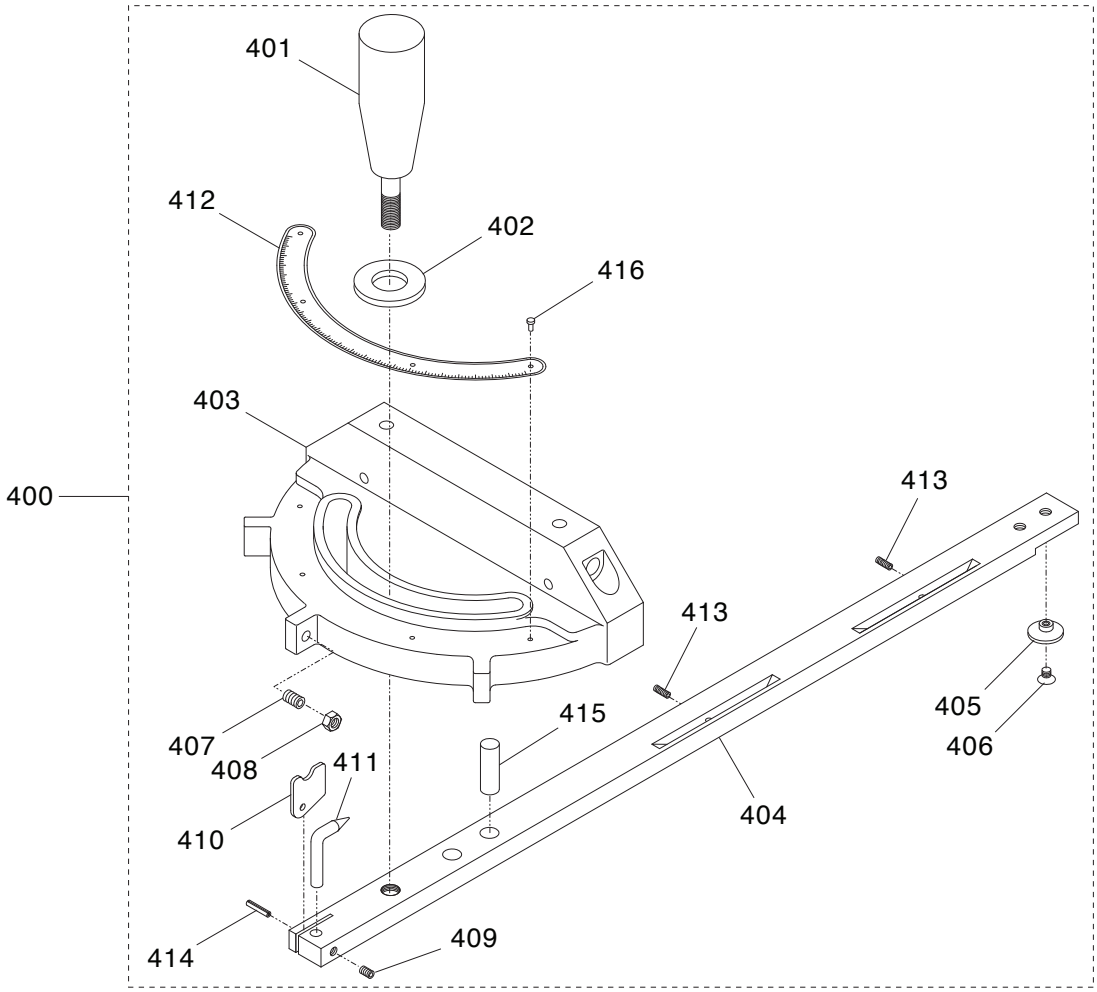

REF	PART #	DESCRIPTION
400	P0899400	MITER GAUGE ASSEMBLY
401	P0899401	MITER HANDLE 5/16-18 X 1
402	P0899402	FLAT WASHER 5/16
403	P0899403	MITER GAUGE BODY
404	P0899404	MITER BAR
405	P0899405	MITER BAR GUIDE WASHER
406	P0899406	FLAT HD SCR 1/4-20 X 5/16
407	P0899407	SET SCREW 10-24 X 3/4
408	P0899408	HEX NUT 10-24

REF	PART #	DESCRIPTION
409	P0899409	SET SCREW 10-24 X 1/4
410	P0899410	STOP LINK
411	P0899411	POINTER
412	P0899412	SCALE
413	P0899413	SET SCREW 10-24 X 3/8
414	P0899414	ROLL PIN 3 X 6
415	P0899415	MITER HINGE PIN
416	P0899416	RIVET 2 X 5

BUY PARTS ONLINE AT GRIZZLY.COM!
Scan QR code to visit our Parts Store.

Fence

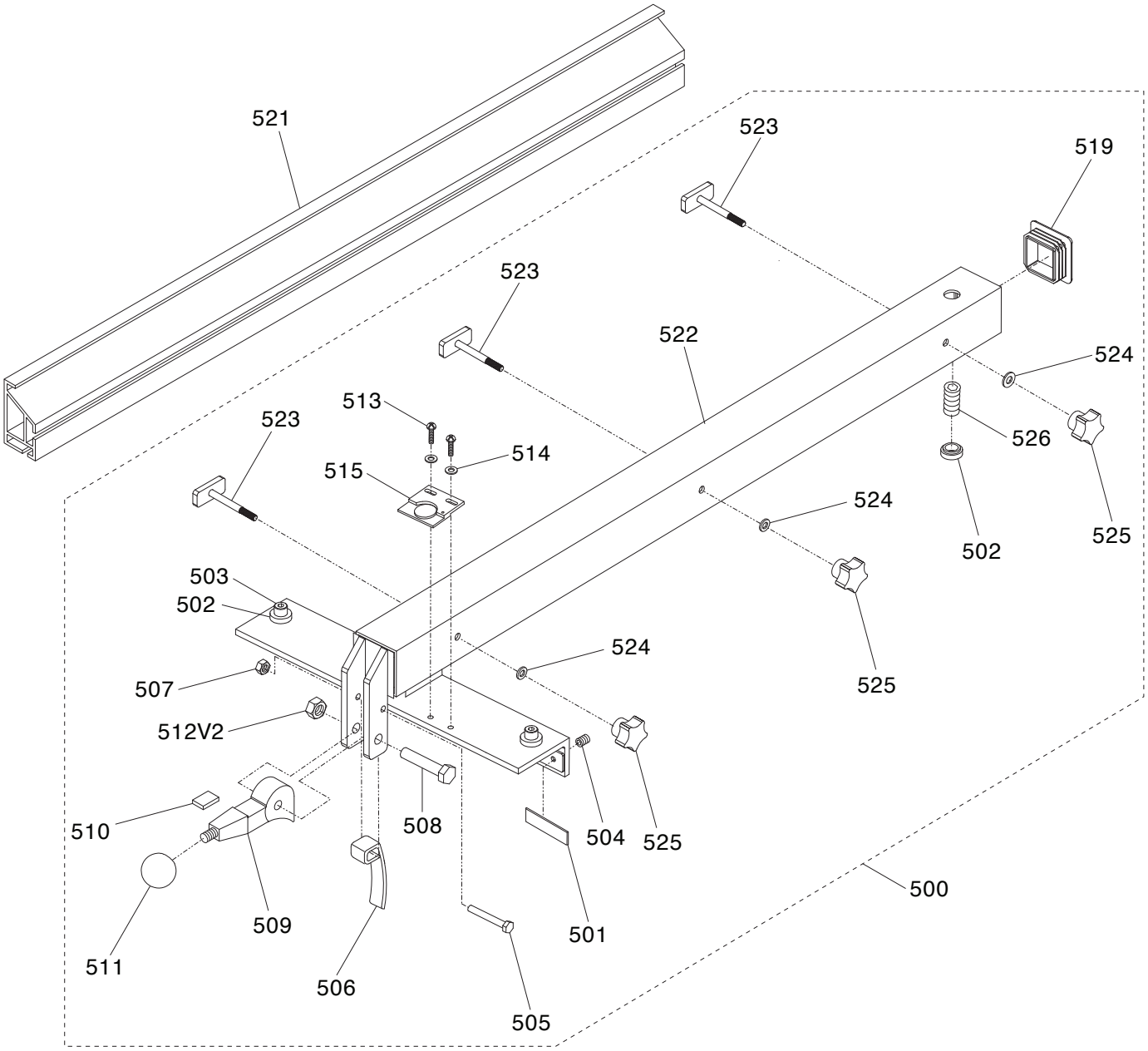

REF	PART #	DESCRIPTION
500	P0899500	FENCE ASSEMBLY
501	P0899501	GLIDE PAD
502	P0899502	KNURLED NUT M12-1.75
503	P0899503	SET SCREW M12-1.75 X 20 NYLON-TIPPED
504	P0899504	SET SCREW 3/8-16 X 5/16
505	P0899505	HEX BOLT 1/4-20 X 1-3/4
506	P0899506	CAM LOCK PLATE
507	P0899507	LOCK NUT 1/4-20
508	P0899508	HEX BOLT 3/8-16 X 1-3/4
509	P0899509	FENCE LOCK CAM LEVER
510	P0899510	MAGNET
511	P0899511	KNOB 3/8-16, D1-9/16, BALL

REF	PART #	DESCRIPTION
512V2	P0899512V2	LOCK NUT 3/8-16 V2.10.20
513	P0899513	PHLP HD SCR 10-24 X 3/8
514	P0899514	FLAT WASHER #10
515	P0899515	MAGNIFIED CURSOR
519	P0899519	FENCE BASE END CAP 50 X 50MM
521	P0899521	FENCE FACE
522	P0899522	FENCE BASE
523	P0899523	T-BOLT M6-1 X 20
524	P0899524	FLAT WASHER 6MM
525	P0899525	KNOB M6-1, D30, 5-LOBE
526	P0899526	SET SCREW M12-1.75 X 32 NYLON-TIPPED

BUY PARTS ONLINE AT GRIZZLY.COM!
Scan QR code to visit our Parts Store.

Fence Rails

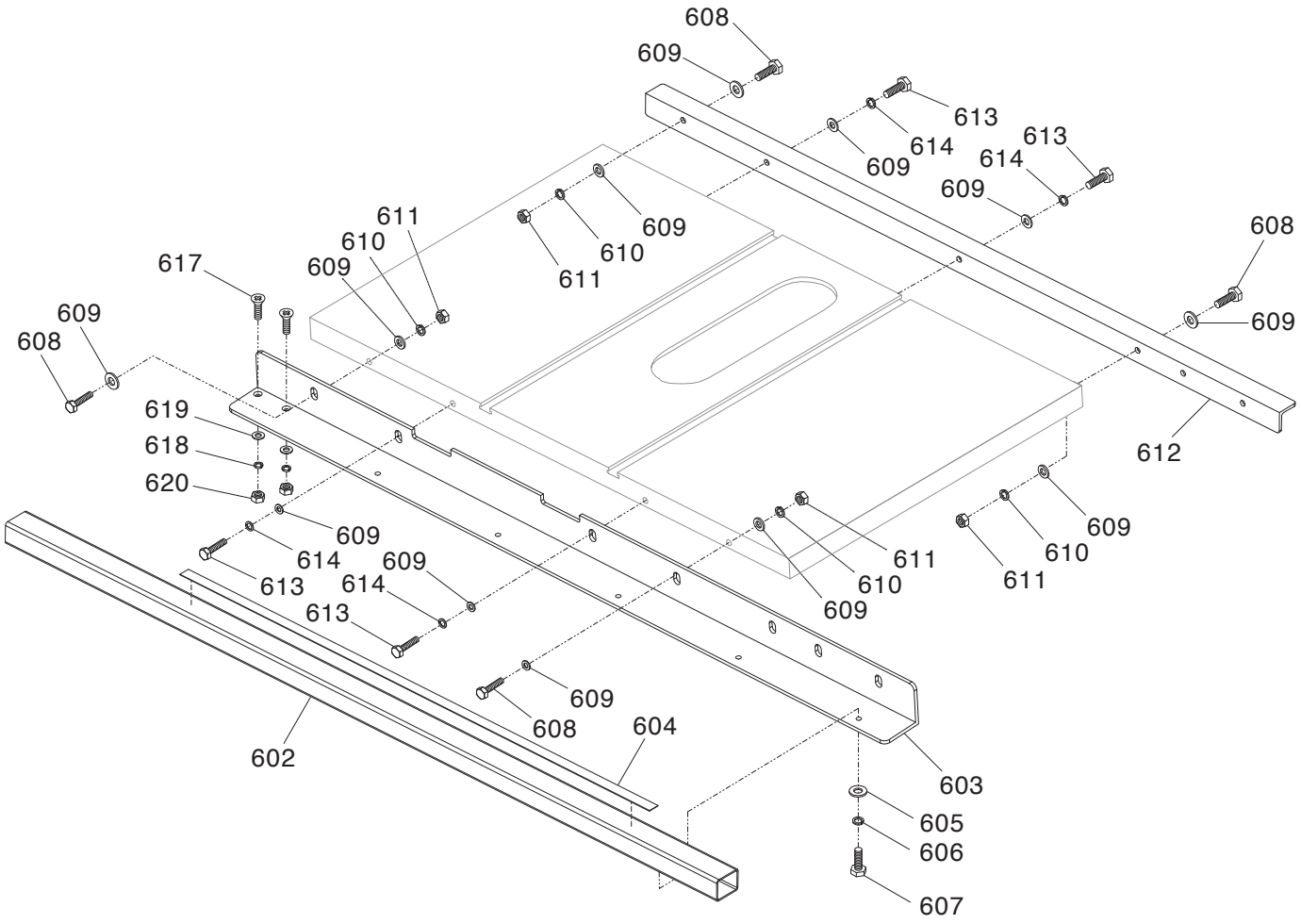

REF	PART #	DESCRIPTION
602	P0899602	FENCE GUIDE TUBE
603	P0899603	FENCE RAIL (FRONT)
604	P0899604	FENCE SCALE LABEL
605	P0899605	FLAT WASHER 6MM
606	P0899606	LOCK WASHER 6MM
607	P0899607	HEX BOLT 1/4-20 X 5/8
608	P0899608	HEX BOLT M10-1.5 X 35
609	P0899609	FLAT WASHER 10MM
610	P0899610	LOCK WASHER 10MM

REF	PART #	DESCRIPTION
611	P0899611	HEX NUT M10-1.5
612	P0899612	FENCE RAIL (REAR)
613	P0899613	HEX BOLT M10-1.5 X 25
614	P0899614	LOCK WASHER 10MM
617	P0899617	FLAT HD SCR M6-1 X 16
618	P0899618	LOCK WASHER 6MM
619	P0899619	FLAT WASHER 6MM
620	P0899620	HEX NUT M6-1

BUY PARTS ONLINE AT GRIZZLY.COM!
Scan QR code to visit our Parts Store.

Labels & Cosmetics

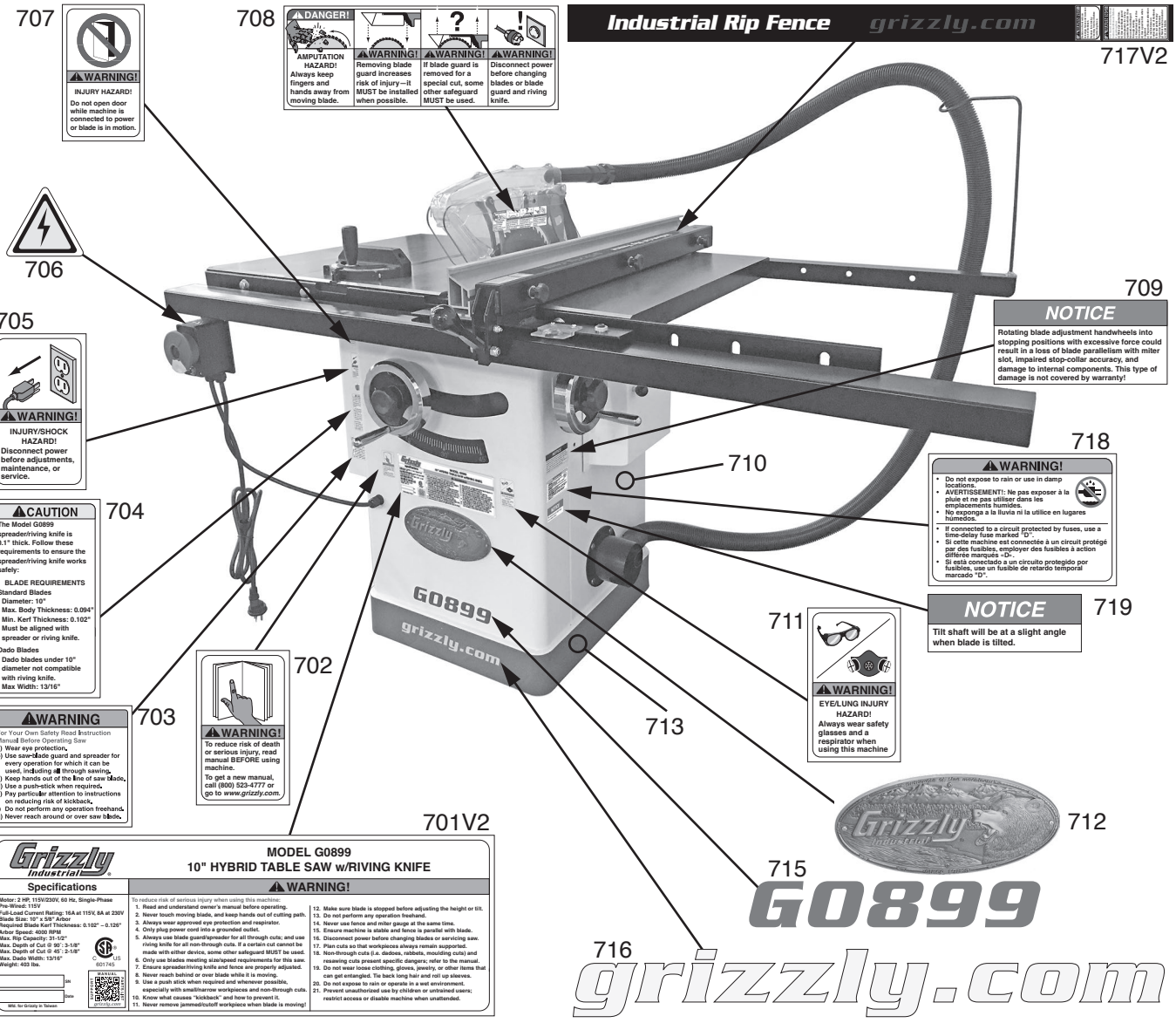

REF	PART #	DESCRIPTION
701V2	P0899701V2	MACHINE ID LABEL V2.10.20
702	P0899702	READ MANUAL LABEL
703	P0899703	TABLE SAW WARNING LABEL
704	P0899704	RIVING KNIFE CAUTION LABEL
705	P0899705	DISCONNECT POWER LABEL
706	P0899706	ELECTRICITY LABEL
707	P0899707	DO NOT OPEN DOOR WARNING LABEL
708	P0899708	BLADE GUARD LABEL
709	P0899709	HANDWHEEL NOTICE LABEL

REF	PART #	DESCRIPTION
710	P0899710	TOUCH-UP PAINT, GRIZZLY BEIGE
711	P0899711	EYE/LUNG HAZARD LABEL - SMALL
712	P0899712	GRIZZLY NAMEPLATE
713	P0899713	GRIZZLY GREEN TAPE
715	P0899715	MODEL NUMBER LABEL
716	P0899716	GRIZZLY.COM LABEL
717V2	P0899717V2	FENCE LABEL V2.01.20
718	P0899718	DO NOT EXPOSE TO RAIN LABEL
719	P0899719	TILT SHAFT NOTICE LABEL

⚠WARNING

Safety labels help reduce the risk of serious injury caused by machine hazards. If any label comes off or becomes unreadable, the owner of this machine MUST replace it in the original location before resuming operations. For replacements, contact (800) 523-4777 or www.grizzly.com.

BUY PARTS ONLINE AT GRIZZLY.COM!
Scan QR code to visit our Parts Store.

WARRANTY & RETURNS

Grizzly Industrial, Inc. warrants every product it sells for a period of **1 year** to the original purchaser from the date of purchase. This warranty does not apply to defects due directly or indirectly to misuse, abuse, negligence, accidents, repairs or alterations or lack of maintenance. This is Grizzly's sole written warranty and any and all warranties that may be implied by law, including any merchantability or fitness, for any particular purpose, are hereby limited to the duration of this written warranty. We do not warrant or represent that the merchandise complies with the provisions of any law or acts unless the manufacturer so warrants. In no event shall Grizzly's liability under this warranty exceed the purchase price paid for the product and any legal actions brought against Grizzly shall be tried in the State of Washington, County of Whatcom.

We shall in no event be liable for death, injuries to persons or property or for incidental, contingent, special, or consequential damages arising from the use of our products.

The manufacturers reserve the right to change specifications at any time because they constantly strive to achieve better quality equipment. We make every effort to ensure that our products meet high quality and durability standards and we hope you never need to use this warranty.

In the event you need to use this warranty, contact us by mail or phone and give us all the details. We will then issue you a "Return Number," which must be clearly posted on the outside as well as the inside of the carton. We will not accept any item back without this number. Proof of purchase must accompany the merchandise.

Please feel free to write or call us if you have any questions about the machine or the manual.

Thank you again for your business and continued support. We hope to serve you again soon.

For further information about the warranty, visit **https://www.grizzly.com/forms/warranty** or scan the QR code below to be automatically directed to our warranty page.



grizzly.com®
TOOL WEBSITE

Buy Direct and Save with Grizzly® – Trusted, Proven and a Great Value!

~Since 1983~

Visit Our Website Today For Current Specials!

ORDER
24 HOURS A DAY!
1-800-523-4777

VISA MasterCard DISCOVER NOVUS AMERICAN EXPRESS