READ THIS FIRST

Model G0869/G0870

******IMPORTANT UPDATE******

For Machines Mfd. Since 01/19 and Owner's Manual Revised 09/20

For questions or help with this product contact Tech Support at (570) 546-9663 or techsupport@grizzly.com

The following change was recently made since the owner's manual was printed:

- Information on using dado blades has been updated.

Aside from this information, all other content in the owner's manual applies and MUST be read and understood for your own safety. **IMPORTANT: Keep this update with the owner's manual for future reference.**

For questions or help, contact our Tech Support at (570) 546-9663 or techsupport@grizzly.com.

Revised Specifications

Main Specifications:

Main Information

Maximum Dado Blade Diameter.....8 in.

Revised Accessories

T30542—8" Dado Insert for G0869/G0870

This 8" dado insert is specifically engineered for the G0869 and G0870 portable table saws. The throat is pre-cut and ready to use. It features a twist lock for tool-free operation, and positioning set screws to ensure a solid and precise fit in the table.

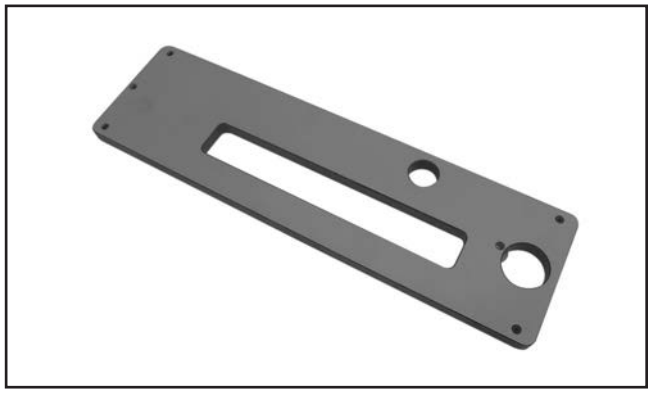

Figure 1. T30542 Dado Insert for G0869/G0870.

Revised Non-Through Cuts

A non-through cut is a sawing operation where the blade does not protrude above the top face of the wood stock, as shown in the **Figure** below.

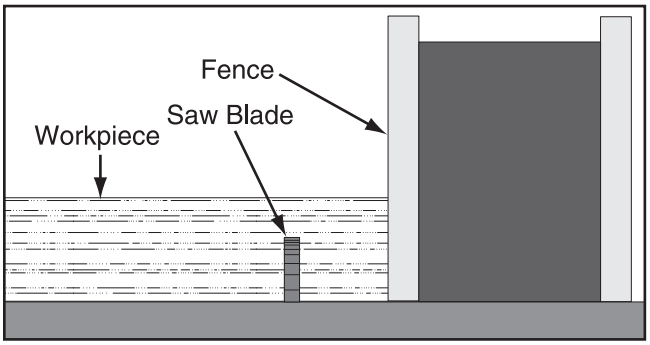

Figure 2. Example of a non-through cut.

Examples of non-through cuts include dadoes and rabbets. Non-through cuts have a higher risk of injury from kickback because the blade guard must be removed. However, when making these cuts with a standard blade, the riving knife MUST be installed because it still provides some protection.

IMPORTANT: When making non-through cuts with a dado blade, the riving knife MUST be removed. Do not attempt to cut the full depth in one pass. Instead, take multiple light passes to reduce the load on the blade.

c UL us LISTED
Table Saw 93K7
E98714

COPYRIGHT © FEBRUARY, 2025 BY GRIZZLY INDUSTRIAL, INC.
WARNING: NO PORTION OF THIS MANUAL MAY BE REPRODUCED IN ANY SHAPE OR FORM WITHOUT THE WRITTEN APPROVAL OF GRIZZLY INDUSTRIAL, INC.
#MN23525 PRINTED IN TAIWAN

Revised When to Use the Riving Knife

Use the riving knife for all non-through cuts made with a standard table saw blade (i.e., dadoes or rabbet cuts, and when using a tenoning jig).

Also, use the riving knife for those special operations where the blade guard or its components get in the way of safe operation, such as with very narrow cuts.

Revised When Not to Use the Riving Knife

Do not use the riving knife with a dado blade. In addition, although it is possible to use the riving knife for through cutting operations, the blade guard assembly offers far more injury protection and risk reduction than the riving knife. Therefore, **we strongly recommend** that you use the blade guard assembly for through cuts.

(Replaces Dado Cutting on Pages 34–36 in Owner's Manual)

Dado Cutting

Commonly used in furniture joinery, a dado is a straight channel cut in the face of the workpiece. Dadoes are "non-through" cuts that can be made with a dado blade or a standard saw blade. The **Figure** below shows a cutaway view of a dado cut being made with a dado blade.

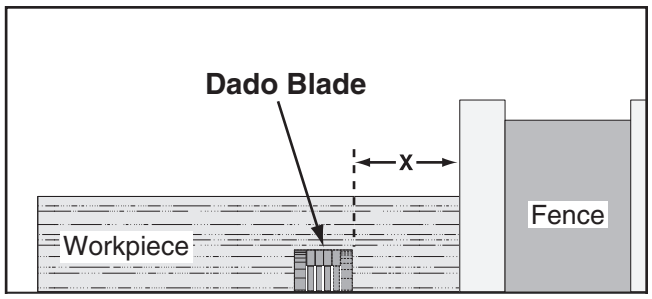

Figure 3. Dado being cut with a dado blade.

Model G0869/G0870 uses 8" diameter dado blades. When using a dado blade, DO NOT install the riving knife.

Note: *You MUST use a dado insert for this operation. This item does not come with model G0869/G0870. However, it can be purchased as an aftermarket accessory (see **Page 1**).*

Installing a Dado Blade

1. DISCONNECT MACHINE FROM POWER!

2. Remove table insert, blade guard assembly, spreader/riving knife, and saw blade.

3. Install and adjust 8" dado blade system according to dado blade manufacturer's instructions.

4. Install dado table insert (sold separately).

⚠WARNING

DO NOT make through cuts with a dado blade. The extra width of a dado blade will increase the risk of kickback during a through cut. Dado blades are only intended for non-through cuts. Failure to heed this warning could result in serious injury.

⚠WARNING

Never try to cut a warped board by holding it down against the table. If kickback occurs, your hand could be pulled into the blade, resulting in accidental contact with the rotating blade, causing severe lacerations or amputation.

Cutting Dadoes with a Dado Blade

Because dado blades are much wider than standard blades, they place a greater amount of force against the workpiece when cutting. This additional force increases the risk of kickback, requiring the operator to take additional steps when cutting to keep their injury risk at an acceptable level.

⚠WARNING

Dado blades have a higher risk of kickback than normal blades because their larger size applies stronger forces to the workpiece. This risk increases relative to the depth and width of the cut. To minimize your risk of serious personal injury, ensure that stock is flat and straight, and make multiple light cuts (rather than one deep cut) to achieve the desired cutting depth.

The **Figure** below demonstrates the sequential process of making multiple, light cuts that get progressively deeper. The actual number of cuts used should be determined by workpiece hardness, total dado depth, and feed rate. In general, if you hear the motor slow down during the cut, you are cutting too deep or feeding too fast.

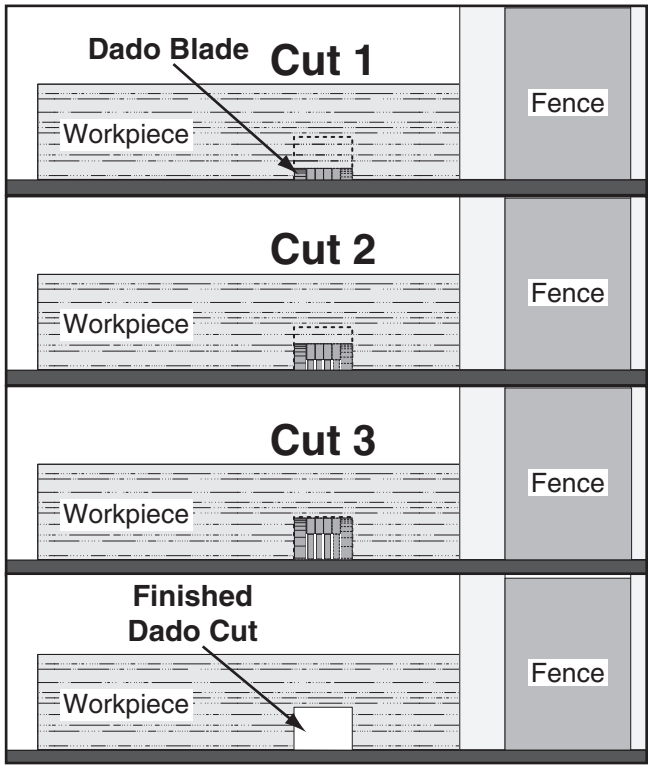

Figure 4. Example of dado being cut with multiple light cuts, instead of one deep cut.

To cut a dado with a dado blade:

1. DISCONNECT MACHINE FROM POWER!
2. Install 8" dado blade and dado insert.
3. Adjust dado blade to desired depth of cut.
4. Adjust distance between fence and inside edge of blade, as shown in **Figure 3** on **Page 2,** to dado length of a workpiece.
   - If dadoing across workpiece, use miter gauge and carefully line up desired cut with dado blade. To reduce kickback, DO NOT use fence in combination with miter gauge.
5. Connect saw to power source.
6. Turn saw ***ON***. Blade should run smoothly, with no vibration.
7. When blade has reached full speed, perform test cut with scrap piece of wood.
8. If cut is satisfactory, repeat cut with actual workpiece.

Cutting Dadoes with a Standard Blade

A ripping blade (described on **Page 25** in owner's manual) is typically the best blade to use when cutting dadoes with a standard blade because it removes sawdust very efficiently.

To cut a dado with a standard blade:

1. DISCONNECT MACHINE FROM POWER!
2. Install 10" standard blade, riving knife, and standard table insert.
3. Mark width of dado cut on workpiece. Include marks on edge of workpiece so cut path can be aligned when workpiece is lying on table.
4. Raise blade up to desired depth of cut (depth of dado channel desired).
5. Set up saw for type of cut you need to make, depending on whether it is a rip cut or crosscut (see **Pages 32–33** in owner's manual).

6. Align blade to cut one side of dado, as shown in **Figure 5**.

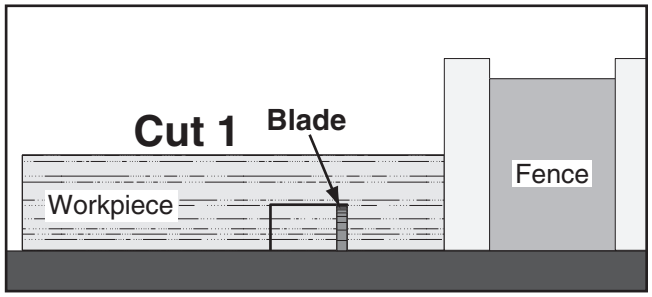

Figure 5. First cut for a single-blade dado.

7. Reconnect saw to power source and turn saw ***ON***. Allow blade to reach full speed, then perform cutting operation.

8. Repeat cutting operation on other side of dado, as shown in **Figure 6**.

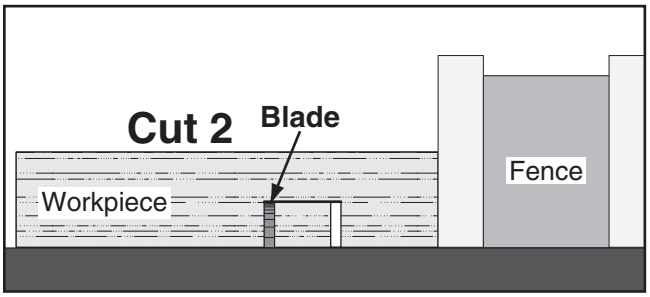

Figure 6. Second cut for a single-blade dado.

9. Make additional cuts (see **Figure 7**) in center of dado to clear out necessary material. Dado is complete when channel is completely cleared out.

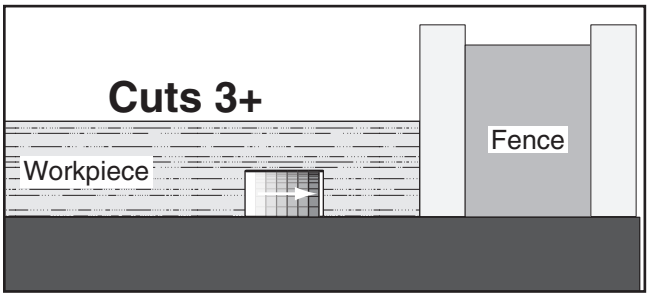

Figure 7. Additional single-blade dado cuts.

READ THIS FIRST

Model G0869/G0870

IMPORTANT UPDATE

For Machines Mfd. Since 04/24
and Owner's Manual Revised 09/20

For questions or help with this product contact Tech Support at (570) 546-9663 or techsupport@grizzly.com

The following changes were recently made since the owner's manual was printed:

- Parts changed.

Aside from this information, all other content in the owner's manual applies and MUST be read and understood for your own safety. **IMPORTANT: Keep this update with the owner's manual for future reference.**

For questions or help, contact our Tech Support at (570) 546-9663 or techsupport@grizzly.com.

Revised Parts

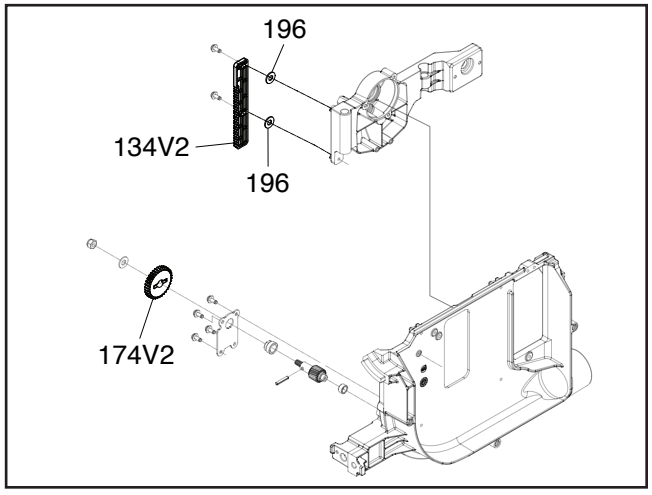

REF	PART #	DESCRIPTION
134V2	P0869134V2	RACK V2.04.24
174V2	P0869174V2	GEAR 34T V2.04.24
196	P0869196	FLAT WASHER 5 X 16 X 3

c UL us LISTED
Table Saw 93K7
E98714

COPYRIGHT © FEBRUARY, 2024 BY GRIZZLY INDUSTRIAL, INC.
WARNING: NO PORTION OF THIS MANUAL MAY BE REPRODUCED IN ANY SHAPE OR FORM WITHOUT THE WRITTEN APPROVAL OF GRIZZLY INDUSTRIAL, INC.
#LW23110 PRINTED IN TAIWAN

READ THIS FIRST

Grizzly Industrial, Inc.®

Models G0869/G0870

IMPORTANT UPDATE

For Machines Mfd. Since 1/19
and Owner's Manual Revised 9/20

For questions or help with this product contact Tech Support at (570) 546-9663 or techsupport@grizzly.com

The following changes were recently made since the owner's manual was printed:

- Checking fence parallelism instructions added to Assembly section.
- Adjusting Fence to Blade Parallelism instructions added.

Aside from this information, all other content in the owner's manual applies and MUST be read and understood for your own safety. **IMPORTANT: Keep this update with the owner's manual for future reference.**

For questions or help, contact our Tech Support at (570) 546-9663 or techsupport@grizzly.com.

Checking Fence Parallelism

Note: *This assembly section follows* ***Installing Fence & Table Extension.***

To check fence parallelism:

1. Slide fence up against right hand edge of miter slot, and lock it in place. Examine how the fence lines up with the miter slot.

Note: *It is permissible for the back of the fence to pivot outward no more than 1/64" from being parallel to the blade. This creates a larger opening between the fence and the blade, at the rear of the blade, to reduce risk of workpiece binding or burning as it is fed through the cut. Many woodworkers intentionally set up their fence in this manner. Keep this in mind before adjusting your fence.*

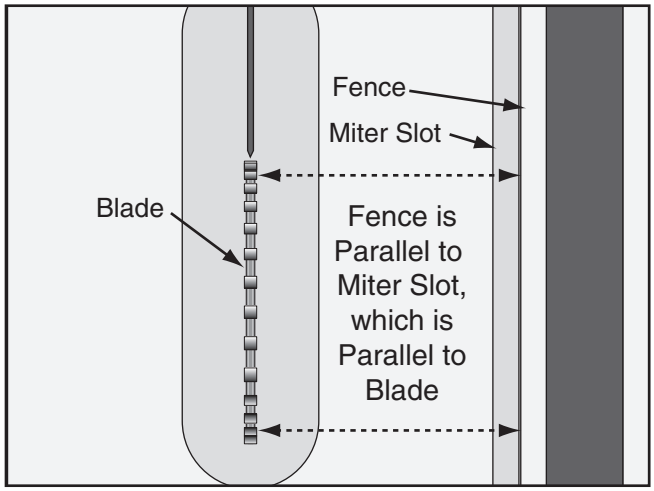

Figure 1. Checking fence parallelism with blade.

—If the fence/miter slot *are* parallel with the blade, no adjustments need to be made.

—If the fence *is not* parallel with the blade, then you must adjust the fence, as described in **Adjusting Fence to Blade Parallelism** in **This Update**, so that it is parallel with the blade.

—If the miter slot *is not* parallel with the blade, you must follow the procedures described in **Miter Slot to Blade Parallelism** on **Page 52** in **Manual**.

COPYRIGHT © MARCH, 2022 BY GRIZZLY INDUSTRIAL, INC.
WARNING: NO PORTION OF THIS MANUAL MAY BE REPRODUCED IN ANY SHAPE OR FORM WITHOUT THE WRITTEN APPROVAL OF GRIZZLY INDUSTRIAL, INC.
#JP21450 PRINTED IN TAIWAN

Adjusting Fence

The G0869/G0870 fence can be adjusted for parallelism. Some trial and error may be needed to achieve satisfactory results.

Adjusting Fence to Blade Parallelism

Tools Needed **Qty**
Hex Wrench 4mm..... 1

To adjust fence to blade parallelism:

1. DISCONNECT SAW FROM POWER!

2. Raise blade all the way up and set tilt to 90°.

3. Adjust fence against right side of blade.

4. Loosen (2) cap screws underneath front of fence that secure bearing block support bracket (see **Figure 2**). DO NOT remove cap screws.

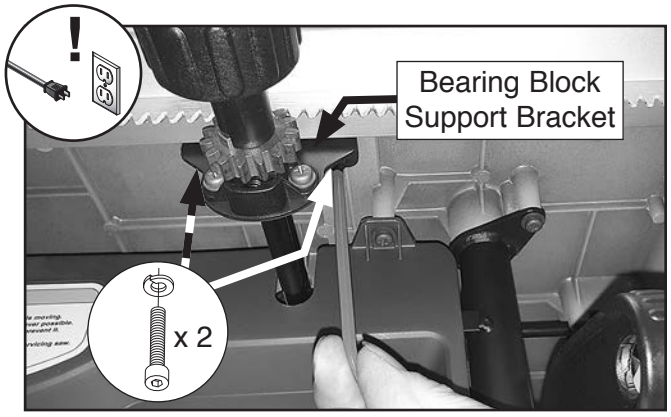

Figure 2. Loosening bearing support bracket.

5. Using a combination of turning fence adjustment knob and moving fence body by hand, adjust fence so that it evenly touches blade along its entire length, as shown in **Figure 3**.

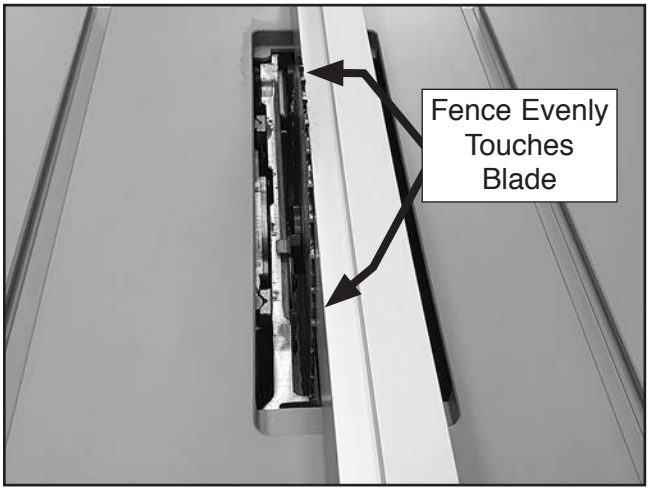

Figure 3. Fence properly aligned with blade.

6. Once fence-to-blade parallelism is properly adjusted, tighten cap screws loosened in **Step 4**.

Note: *If the fence and blade are still not parallel after performing this procedure, follow the same steps to adjust the bearing block support bracket at the rear of the fence.*

MODEL G0869/G0870
PORTABLE TABLE SAWS
OWNER'S MANUAL
(For models manufactured since 06/20)

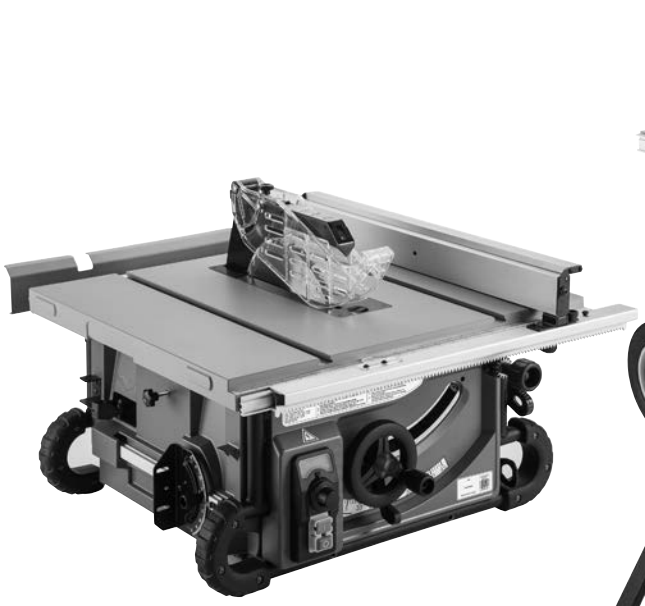

G0869



G0870

c UL us
LISTED
Table Saw 93K7
E98714

COPYRIGHT © JANUARY, 2019 BY GRIZZLY INDUSTRIAL, INC., REVISED SEPTEMBER, 2020 (AI)
WARNING: NO PORTION OF THIS MANUAL MAY BE REPRODUCED IN ANY SHAPE OR FORM WITHOUT THE WRITTEN APPROVAL OF GRIZZLY INDUSTRIAL, INC.
#WK20119 PRINTED IN TAIWAN V3.09.20

⚠ WARNING!

This manual provides critical safety instructions on the proper setup, operation, maintenance, and service of this machine/tool. Save this document, refer to it often, and use it to instruct other operators.

Failure to read, understand and follow the instructions in this manual may result in fire or serious personal injury—including amputation, electrocution, or death.

The owner of this machine/tool is solely responsible for its safe use. This responsibility includes but is not limited to proper installation in a safe environment, personnel training and usage authorization, proper inspection and maintenance, manual availability and comprehension, application of safety devices, cutting/sanding/grinding tool integrity, and the usage of personal protective equipment.

The manufacturer will not be held liable for injury or property damage from negligence, improper training, machine modifications or misuse.

⚠ WARNING!

Some dust created by power sanding, sawing, grinding, drilling, and other construction activities contains chemicals known to the State of California to cause cancer, birth defects or other reproductive harm. Some examples of these chemicals are:

- **Lead from lead-based paints.**
- **Crystalline silica from bricks, cement and other masonry products.**
- **Arsenic and chromium from chemically-treated lumber.**

Your risk from these exposures varies, depending on how often you do this type of work. To reduce your exposure to these chemicals: Work in a well ventilated area, and work with approved safety equipment, such as those dust masks that are specially designed to filter out microscopic particles.

Table of Contents

INTRODUCTION 2
- Contact Info 2
- Manual Accuracy 2
- Identification 3
- Controls & Components 4
- Glossary Of Terms 6
- G0869 Data Sheet 7
- G0870 Data Sheet 9

SECTION 1: SAFETY 11
- Safety Instructions for Machinery 11
- Additional Safety for Table Saws 13
- Preventing Kickback 14
- Protecting Yourself From Kickback 14

SECTION 2: POWER SUPPLY 15

SECTION 3: SETUP 17
- Needed for Setup 17
- Unpacking 17
- Inventory 18
- Site Considerations 19
- Assembly 19
- Dust Collection 22
- Test Run 22

SECTION 4: OPERATIONS 23
- Operation Overview 23
- Workpiece Inspection 24
- Non-Through & Through Cuts 24
- Blade Requirements 25
- Blade Selection 25
- Blade Installation 27
- Blade Guard Assembly 28
- Riving Knife 31
- Ripping 32
- Crosscutting 33
- Miter Cuts 33
- Blade Tilt/Bevel Cuts 34
- Dado Cutting 34
- Rabbet Cutting 36

SECTION 5: SHOP-MADE SAFETY ACCESSORIES 39
- Featherboards 39
- Push Sticks 42
- Push Blocks 43

SECTION 6: GRIZZLY AFTERMARKET ACCESSORIES 44

SECTION 7: MAINTENANCE 46
- Schedule 46
- Cleaning & Protecting 46
- Lubrication 46

SECTION 8: SERVICE 48
- Troubleshooting 48
- Blade Tilt Stops 50
- Miter Slot to Blade Parallelism 52
- Spreader or Riving Knife Alignment 53
- Fence Scale Calibration 55
- Table/Dado Insert Adjustment 55
- Brush Replacement 56

SECTION 9: WIRING 57
- Wiring Safety Instructions 57
- Wiring Diagram 58
- Electrical Components 59

SECTION 10: PARTS 60
- Table & Fence 60
- Motor & Blade 62
- Base 64
- Blade Guard 65
- Stand (G0870) 66
- Labels & Cosmetics 67

WARRANTY & RETURNS 69

INTRODUCTION

Contact Info

We stand behind our machines! If you have questions or need help, contact us with the information below. Before contacting, make sure you get the **serial number** and **manufacture date** from the machine ID label. This will help us help you faster.

Grizzly Technical Support
1815 W. Battlefield
Springfield, MO 65807
Phone: (570) 546-9663
Email: techsupport@grizzly.com

We want your feedback on this manual. What did you like about it? Where could it be improved? Please take a few minutes to give us feedback.

Grizzly Documentation Manager
P.O. Box 2069
Bellingham, WA 98227-2069
Email: manuals@grizzly.com

Manual Accuracy

We are proud to provide a high-quality owner's manual with your new machine!

We made every effort to be exact with the instructions, specifications, drawings, and photographs in this manual. Sometimes we make mistakes, but our policy of continuous improvement also means that **sometimes the machine you receive is slightly different than shown in the manual**.

If you find this to be the case, and the difference between the manual and machine leaves you confused or unsure about something, check our website for an updated version. We post current manuals and manual updates for free on our website at **www.grizzly.com**.

Alternatively, you can call our Technical Support for help. Before calling, make sure you write down the **Manufacture Date** and **Serial Number** from the machine ID label (see below). This information is required for us to provide proper tech support, and it helps us determine if updated documentation is available for your machine.

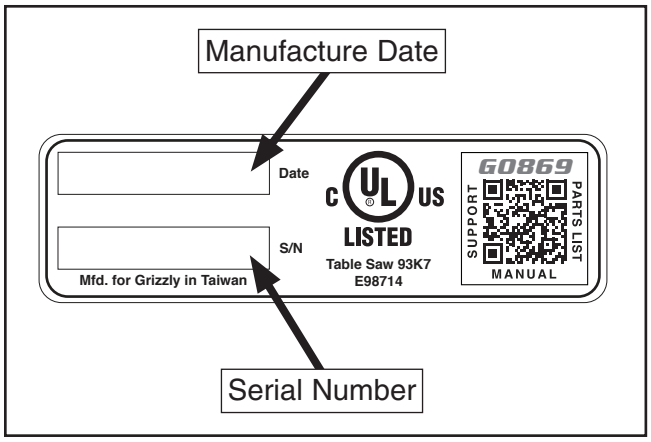

Identification

Become familiar with the names and locations of the controls and features shown below to better understand the instructions in this manual.

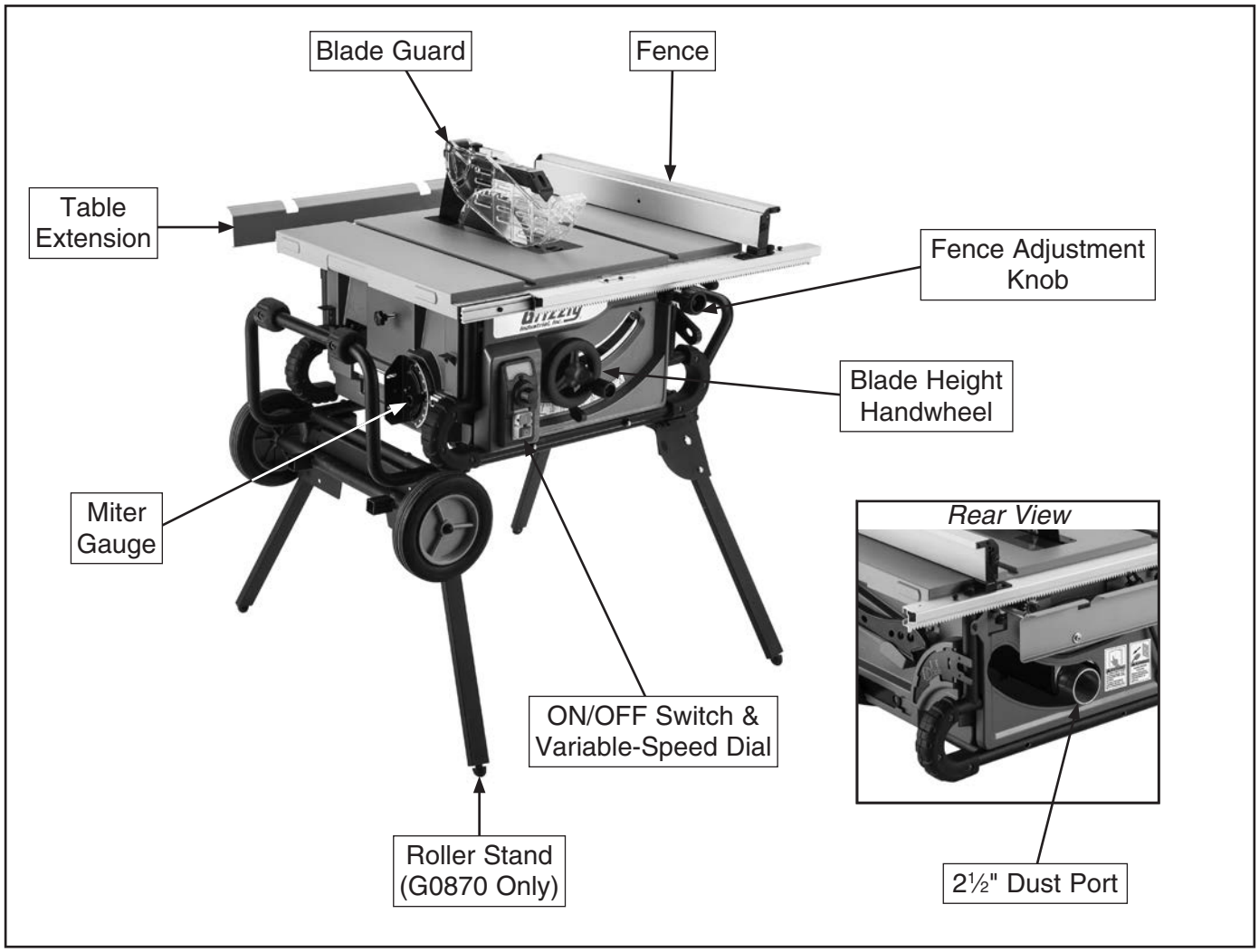

⚠CAUTION

For Your Own Safety Read Instruction Manual Before Operating Saw

a) Wear eye protection.
b) Use saw-blade guard and spreader for every operation for which it can be used, including all through sawing.
c) Keep hands out of the line of saw blade.
d) Use a push-stick when required.
e) Pay particular attention to instructions on reducing risk of kickback.
f) Do not perform any operation freehand.
g) Never reach around or over saw blade.

Controls & Components

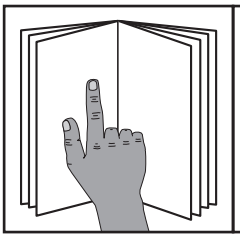

⚠WARNING

To reduce your risk of serious injury, read this entire manual BEFORE using machine.

Refer to the following figures and descriptions to become familiar with the basic controls and components of this machine. Understanding these items and how they work will help you understand the rest of the manual and minimize your risk of injury when operating this machine.

Power Controls & Components

A. LED Power Indicator: Illuminates when motor is turned ***ON***.

B. Variable-Speed Dial: Rotates to adjust arbor speed from 2000–4000 RPM. Rotate clockwise to increase RPM; rotate counterclockwise to decrease RPM.

C. ON Button: Starts motor.

D. OFF Button: Stops motor.

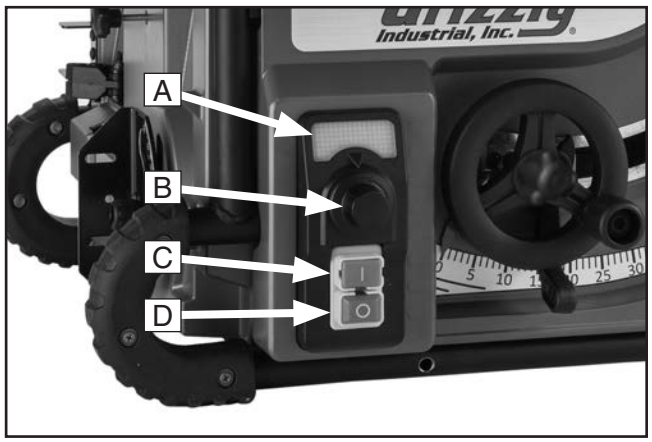

Figure 1. Location of power controls and components.

Blade Adjustment & Safety

E. Bade Guard w/Anti-Kickback Protection: Reduces risk of laceration and kickback-related injuries during cutting operations. Clear guard helps to prevent hands and fingers from contacting rotating blade. Anti-kickback pawls and spreader reduce risk of kickback (for information on kickback and how to prevent it, refer to **Page 14**).

F. Blade Height Handwheel: Rotates to adjust blade height from 0"–3⅛". Rotate clockwise to raise blade; rotate counterclockwise to lower blade.

G. Blade Tilt Scale & Pointer: Indicate angle of blade tilt from 0°–45° left.

H. Blade Tilt Lock Lever: Secures blade tilt setting. Move right to unlock and allow blade tilt adjustment; move left to secure setting.

Note: *Blade tilt is adjusted manually by moving blade height handwheel left or right when lock lever is in unlocked position (see **Page 34** for more information).*

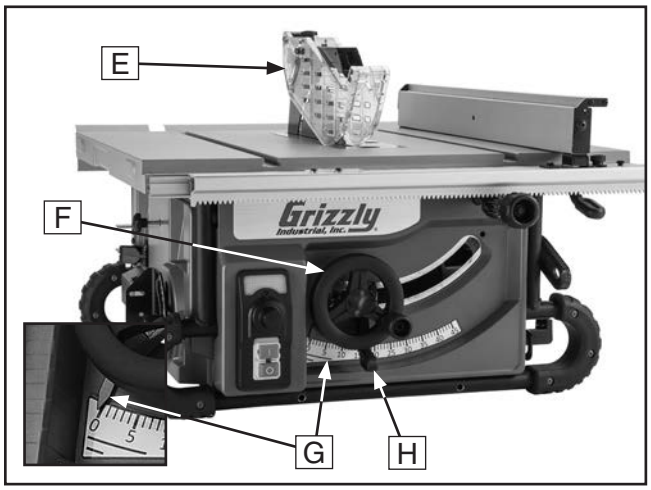

Figure 2. Location of blade guard and blade adjustment controls.

Table and Fence Controls & Components

I. Fence Scale & Pointer: Indicate distance of fence from blade. Set to desired width of finished workpiece.

J. Fence with Narrow-Rip Attachment: Supports long edge of workpiece during rip cuts. Narrow-rip attachment pivots down to allow narrow rip cuts with blade guard installed (refer to **Page 32** for more information).

K. Table Extension: Slides out to provide support for long workpieces.

L. Fence Adjustment Knob: Rotates to adjust distance between fence and blade.

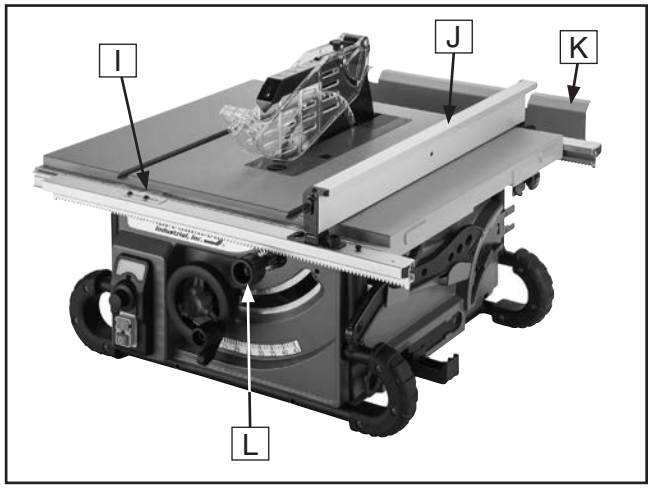

Figure 3. Location of table and fence controls and components.

M. Fence Lock Lever: Locks fence position. Move down to loosen fence; move up to lock fence.

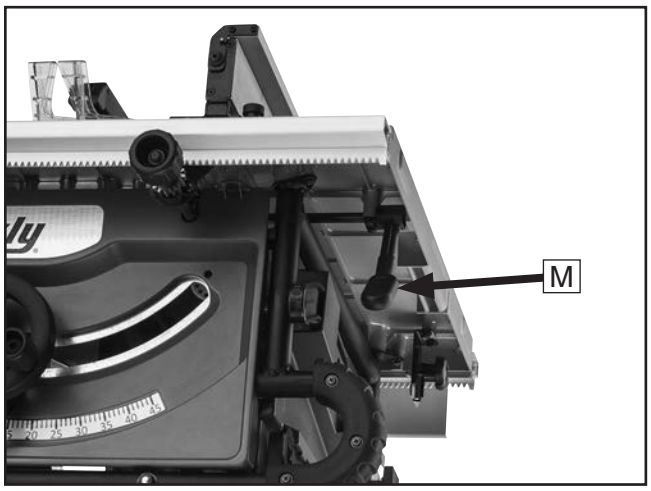

Figure 4. Location of fence lock lever.

Glossary Of Terms

The following is a list of common definitions, terms and phrases used throughout this manual as they relate to this table saw and woodworking in general. Become familiar with these terms for assembling, adjusting or operating this machine. Your safety is **VERY** important to us at Grizzly!

Arbor: A metal shaft extending from the drive mechanism that is the mounting location for the saw blade.

Bevel Edge Cut: A cut made with the blade tilted to an angle between 0˚ and 45˚ to cut a beveled edge onto a workpiece. Refer to **Page 34** for more details.

Blade Guard Assembly: Metal or plastic safety device that mounts over the saw blade. Its function is to prevent the operator from coming into contact with the saw blade. Refer to **Page 28** for more details.

Crosscut: Cutting operation in which the crosscut fence is used to cut across the shortest width of the workpiece. Refer to **Page 33** for more details.

Dado Blade: Blade or set of blades that are used to cut grooves and rabbets. Refer to **Page 34** for more details. The saw and arbor are not intended to safely use a larger dado blade.

Dado Cut: Cutting operation that uses a dado blade to cut a flat bottomed groove into the face of the workpiece. Refer to **Page 34** for more details.

Featherboard: Safety device used to keep the workpiece against the rip fence and against the table surface. Refer to **Page 39** for more details.

Kerf: The resulting cut or gap in the workpiece after the saw blade passes through during a cutting operation.

Kickback: An event in which the workpiece is propelled back towards the operator at a high rate of speed.

Non-Through Cut: A cut in which the blade does not cut through the top of the workpiece. Refer to **Page 24** for more details.

Parallel: Being an equal distance apart at every point along two given lines or planes (i.e. the rip fence face is parallel to the face of the saw blade).

Perpendicular: Lines or planes that intersect and form right angles (i.e. the blade is perpendicular to the table surface).

Push Stick: Safety device used to push the workpiece through a cutting operation. Used most often when rip cutting thin workpieces. Refer to **Page 42** for more details.

Rabbet: Cutting operation that creates an L-shaped channel along the edge of the workpiece. Refer to **Page 36** for more details.

Rip Cut: Cutting operation in which the rip fence is used to cut across the widest width of the workpiece. Refer to **Page 32** for more details.

Riving Knife: Metal plate located behind the blade. It maintains the kerf opening in the wood when performing a cutting operation. Refer to **Page 31** for more details.

Straightedge: A tool used to check the flatness, parallelism, or consistency of a surface(s).

Thin Kerf Blade: Do not use a blade with a kerf or thickness that is thinner than a standard blade on this saw.

Through Cut: A cut in which the blade cuts completely through the workpiece. Refer to **Page 25** for more details.

MACHINE DATA SHEET

Customer Service #: (570) 546-9663 · To Order Call: (800) 523-4777 · Fax #: (800) 438-5901

MODEL G0869 10" 2 HP BENCHTOP TABLE SAW WITH RIVING KNIFE

Product Dimensions:

Weight..... 65 lbs.
Width (side-to-side) x Depth (front-to-back) x Height..... 28 x 37-1/2 x 20-1/2 in.
Footprint (Length x Width)..... 20-1/2 x 27 in.

Shipping Dimensions:

Type..... Cardboard Box
Content..... Machine
Weight..... 72 lbs.
Length x Width x Height..... 31 x 30 x 17 in.
Must Ship Upright..... Yes

Electrical:

Power Requirement..... 120V, Single-Phase, 60 Hz
Full-Load Current Rating..... 15A
Minimum Circuit Size..... 20A
Connection Type..... Cord & Plug
Power Cord Included..... Yes
Power Cord Length..... 6 ft.
Power Cord Gauge..... 14 AWG
Plug Included..... Yes
Included Plug Type..... 1-15
Switch Type..... ON/OFF Push-Button

Motors:

Main

Horsepower..... 2 HP
Phase..... Single-Phase
Amps..... 15A
Speed..... 20,000 RPM
Type..... Universal
Power Transfer ..... Gearbox
Bearings..... Sealed & Permanently Lubricated

Main Specifications:

Main Information

Table Saw Type..... Benchtop
Maximum Blade Diameter..... 10 in.
Arbor Size..... 5/8 in.
Arbor Speed..... 2,000 - 4,000 RPM
Maximum Width of Dado..... 13/16 in.
Blade Tilt Direction..... Left
Max Blade Tilt..... 45 deg.
Maximum Depth of Cut At 90 Degrees..... 3-1/8 in.
Maximum Depth of Cut At 45 Degrees..... 2-1/4 in.
Max Rip Right of Blade w/Included Fence & Rails..... 28 in.

Additional Blade Information

Included Blade Information	10" x 40T
Riving Knife/Spreader Thickness	0.091 in.
Required Blade Body Thickness	0.079 in.
Required Blade Kerf Thickness	0.118 in.
Rim Speed at Max Blade Diameter	10,500 FPM

Table Information

Floor to Table Height	13-3/4 in.
Table Size with Extension Wings Width	26-3/8 in.
Table Size with Extension Wings Depth	32-1/4 in.
Distance Front of Table to Center of Blade	12-1/4 in.
Distance Front of Table to Blade At Maximum Cut	7-1/2 in.
Main Table Size Thickness	1-1/2 in.

Fence Information

Fence Type	Aluminum
Fence Size Length	25-3/4 in.
Fence Size Width	1 in.
Fence Size Height	2-3/8 in.
Fence Rail Type	Aluminum
Fence Rail Length	26-3/8 in.
Fence Rail Width	1-1/2 in.
Fence Rail Height	1-1/4 in.

Miter Gauge Information

Miter Gauge Slot Type	T-Slot
Miter Gauge Slot Size Width	3/4 in.
Miter Gauge Slot Size Height	3/8 in.

Construction

Table	Aluminum
Cabinet	Steel Tube w/Cover
Trunnions	Aluminum
Rails	Aluminum
Miter Gauge Construction	Sheet Metal Body, Aluminum Bar
Guard	Steel and Clear Plastic
Arbor Bearings	Sealed & Permanently Lubricated

Other Related Information

Number of Dust Ports	1
Dust Port Size	2-1/2 in.
Compatible Mobile Base	G0871

Other Specifications:

Country of Origin	Taiwan
Warranty	1 Year
Approximate Assembly & Setup Time	15 Minutes
Serial Number Location	Machine ID Label
Sound Rating	92 dB
ISO 9001 Factory	Yes
Certified by a Nationally Recognized Testing Laboratory (NRTL)	Yes

Features:

Built-In 4" Table Extension
Only 7 Handwheel Turns for Min. to Max. Blade Elevation
Quick-Release Blade Guard & Riving Knife
Die-Cast Aluminum Table Insert
Flip-Down Fence for Small/Thin Workpieces

MACHINE DATA SHEET

Customer Service #: (570) 546-9663 · To Order Call: (800) 523-4777 · Fax #: (800) 438-5901

MODEL G0870 10" 2 HP 115V PORTABLE TABLE SAW WITH ROLLER STAND

Product Dimensions:

Weight	96 lbs.
Width (side-to-side) x Depth (front-to-back) x Height	41-1/2 x 37-1/2 x 41 in.
Footprint (Length x Width)	35 x 33 in.

Shipping Dimensions:

Type	Cardboard Box
Content	Machine
Weight	106 lbs.
Length x Width x Height	31 x 30 x 24 in.
Must Ship Upright	Yes

Electrical:

Power Requirement	120V, Single-Phase, 60 Hz
Full-Load Current Rating	15A
Minimum Circuit Size	20A
Connection Type	Cord & Plug
Power Cord Included	Yes
Power Cord Length	6 ft.
Power Cord Gauge	14 AWG
Plug Included	Yes
Included Plug Type	1-15
Switch Type	ON/OFF Push-Button

Motors:

Main

Horsepower	2 HP
Phase	Single-Phase
Amps	15A
Speed	20,000 RPM
Type	Universal
Power Transfer	Gearbox
Bearings	Sealed & Permanently Lubricated

Main Specifications:

Main Information

Table Saw Type	Portable
Maximum Blade Diameter	10 in.
Arbor Size	5/8 in.
Arbor Speed	2,000 to 4,000 RPM
Maximum Width of Dado	13/16 in.
Blade Tilt Direction	Left
Max Blade Tilt	45 Deg.
Maximum Depth of Cut At 90 Degrees	3-1/8 in.
Maximum Depth of Cut At 45 Degrees	2-1/4 in.
Max Rip Right of Blade w/Included Fence & Rails	28 in. w/4" Table Ext.

Additional Blade Information

Included Blade Information	10" x 40T
Riving Knife/Spreader Thickness	0.091 in.
Required Blade Body Thickness	0.079 in.
Required Blade Kerf Thickness	0.118 in.
Rim Speed at Max Blade Diameter	10,500 FPM

Table Information

Floor to Table Height	34 in.
Table Size with Extension Wings Width	26-3/8 in.
Table Size with Extension Wings Depth	32-1/4 in.
Distance Front of Table to Center of Blade	12-1/4 in.
Distance Front of Table to Blade At Maximum Cut	7-1/2 in.
Main Table Size Thickness	1-1/2 in.

Fence Information

Fence Type	Aluminum
Fence Size Length	25-3/4 in.
Fence Size Width	1 in.
Fence Size Height	2-3/8 in.
Fence Rail Type	Aluminum
Fence Rail Length	26-3/8 in.
Fence Rail Width	1-1/2 in.
Fence Rail Height	1-1/4 in.

Miter Gauge Information

Miter Gauge Slot Type	T-Slot
Miter Gauge Slot Size Width	3/4 in.
Miter Gauge Slot Size Height	3/8 in.

Construction

Table	Aluminum
Cabinet	Steel Tube w/Cover
Trunnions	Aluminum
Rails	Aluminum
Miter Guage Construction	Sheet Metal Body, Aluminum Bar
Guard	Steel and Clear Plastic
Arbor Bearings	Sealed & Permanently Lubricated

Other Related Information

Number of Dust Ports	1
Dust Port Size	2-1/2 in.

Other Specifications:

Country of Origin	Taiwan
Warranty	1 Year
Approximate Assembly & Setup Time	15 Minutes
Serial Number Location	Machine ID Label
Sound Rating	92 dB
ISO 9001 Factory	Yes
Certified by a Nationally Recognized Testing Laboratory (NRTL)	Yes

Features:

Built-In Stand Offers Easy Portability and Quick Setup at Job Sites
Only 7 Handwheel Turns for Min. to Max. Blade Elevation
Built-In 4" Table Extension
Quick-Release Blade Guard and Riving Knife
Die-Cast Aluminum Table Insert
Flip-Down Fence for Small/Thin Workpieces

SECTION 1: SAFETY

For Your Own Safety, Read Instruction Manual Before Operating This Machine

The purpose of safety symbols is to attract your attention to possible hazardous conditions. This manual uses a series of symbols and signal words intended to convey the level of importance of the safety messages. The progression of symbols is described below. Remember that safety messages by themselves do not eliminate danger and are not a substitute for proper accident prevention measures. Always use common sense and good judgment.

⚠DANGER **Indicates an imminently hazardous situation which, if not avoided, WILL result in death or serious injury.**

⚠WARNING **Indicates a potentially hazardous situation which, if not avoided, COULD result in death or serious injury.**

⚠CAUTION **Indicates a potentially hazardous situation which, if not avoided, MAY result in minor or moderate injury. It may also be used to alert against unsafe practices.**

NOTICE **Alerts the user to useful information about proper operation of the machine to avoid machine damage.**

Safety Instructions for Machinery

⚠WARNING

OWNER'S MANUAL. Read and understand this owner's manual BEFORE using machine.

TRAINED OPERATORS ONLY. Untrained operators have a higher risk of being hurt or killed. Only allow trained/supervised people to use this machine. When machine is not being used, disconnect power, remove switch keys, or lock-out machine to prevent unauthorized use—especially around children. Make your workshop kid proof!

DANGEROUS ENVIRONMENTS. Do not use machinery in areas that are wet, cluttered, or have poor lighting. Operating machinery in these areas greatly increases the risk of accidents and injury.

MENTAL ALERTNESS REQUIRED. Full mental alertness is required for safe operation of machinery. Never operate under the influence of drugs or alcohol, when tired, or when distracted.

ELECTRICAL EQUIPMENT INJURY RISKS. You can be shocked, burned, or killed by touching live electrical components or improperly grounded machinery. To reduce this risk, only allow qualified service personnel to do electrical installation or repair work, and always disconnect power before accessing or exposing electrical equipment.

DISCONNECT POWER FIRST. Always disconnect machine from power supply BEFORE making adjustments, changing tooling, or servicing machine. This prevents an injury risk from unintended startup or contact with live electrical components.

EYE PROTECTION. Always wear ANSI-approved safety glasses or a face shield when operating or observing machinery to reduce the risk of eye injury or blindness from flying particles. Everyday eyeglasses are NOT approved safety glasses.

⚠WARNING

WEARING PROPER APPAREL. Do not wear clothing, apparel or jewelry that can become entangled in moving parts. Always tie back or cover long hair. Wear non-slip footwear to reduce risk of slipping and losing control or accidentally contacting cutting tool or moving parts.

HAZARDOUS DUST. Dust created by machinery operations may cause cancer, birth defects, or long-term respiratory damage. Be aware of dust hazards associated with each workpiece material. Always wear a NIOSH-approved respirator to reduce your risk.

HEARING PROTECTION. Always wear hearing protection when operating or observing loud machinery. Extended exposure to this noise without hearing protection can cause permanent hearing loss.

REMOVE ADJUSTING TOOLS. Tools left on machinery can become dangerous projectiles upon startup. Never leave chuck keys, wrenches, or any other tools on machine. Always verify removal before starting!

USE CORRECT TOOL FOR THE JOB. Only use this tool for its intended purpose—do not force it or an attachment to do a job for which it was not designed. Never make unapproved modifications—modifying tool or using it differently than intended may result in malfunction or mechanical failure that can lead to personal injury or death!

AWKWARD POSITIONS. Keep proper footing and balance at all times when operating machine. Do not overreach! Avoid awkward hand positions that make workpiece control difficult or increase the risk of accidental injury.

CHILDREN & BYSTANDERS. Keep children and bystanders at a safe distance from the work area. Stop using machine if they become a distraction.

GUARDS & COVERS. Guards and covers reduce accidental contact with moving parts or flying debris. Make sure they are properly installed, undamaged, and working correctly BEFORE operating machine.

FORCING MACHINERY. Do not force machine. It will do the job safer and better at the rate for which it was designed.

NEVER STAND ON MACHINE. Serious injury may occur if machine is tipped or if the cutting tool is unintentionally contacted.

STABLE MACHINE. Unexpected movement during operation greatly increases risk of injury or loss of control. Before starting, verify machine is stable and mobile base (if used) is locked.

USE RECOMMENDED ACCESSORIES. Consult this owner's manual or the manufacturer for recommended accessories. Using improper accessories will increase the risk of serious injury.

UNATTENDED OPERATION. To reduce the risk of accidental injury, turn machine ***OFF*** and ensure all moving parts completely stop before walking away. Never leave machine running while unattended.

MAINTAIN WITH CARE. Follow all maintenance instructions and lubrication schedules to keep machine in good working condition. A machine that is improperly maintained could malfunction, leading to serious personal injury or death.

DAMAGED PARTS. Regularly inspect machine for damaged, loose, or mis-adjusted parts—or any condition that could affect safe operation. Immediately repair/replace BEFORE operating machine. For your own safety, DO NOT operate machine with damaged parts!

MAINTAIN POWER CORDS. When disconnecting cord-connected machines from power, grab and pull the plug—NOT the cord. Pulling the cord may damage the wires inside. Do not handle cord/plug with wet hands. Avoid cord damage by keeping it away from heated surfaces, high traffic areas, harsh chemicals, and wet/damp locations.

EXPERIENCING DIFFICULTIES. If at any time you experience difficulties performing the intended operation, stop using the machine! Contact our Technical Support at (570) 546-9663.

Additional Safety for Table Saws

⚠WARNING

Serious cuts, amputation, or death can occur from contact with rotating saw blade during operation. Workpieces, broken blades, or flying particles thrown by blade can blind or strike operators or bystanders with deadly force. To reduce the risk of these hazards, operator and bystanders MUST completely heed the hazards and warnings below.

HAND & BODY POSITIONING. Keep hands away from saw blade and out of blade path during operation, so they cannot accidentally slip into blade. Only operate at front of machine and always stand to side of blade path. Never reach behind or over blade, or under blade guard when blade is spinning.

BLADE GUARD. The blade guard protects operator from rotating saw blade. Make sure blade guard is installed, adjusted correctly, and used for all possible "through cuts." Promptly repair or replace if damaged. Re-install immediately after operations that require its removal.

RIVING KNIFE. Use riving knife for all "non-through cuts." Make sure it is aligned and positioned correctly. Promptly repair or replace it if damaged.

KICKBACK. Kickback occurs when saw blade ejects workpiece back toward operator. Know how to reduce risk of kickback, and learn how to protect yourself if it does occur.

FEEDING WORKPIECE. Feeding workpiece incorrectly increases risk of kickback. Always allow blade to reach full speed before cutting, feed workpiece from front of saw, making sure workpiece is flat against table and a fence, miter gauge, or other guide is used to feed workpiece in a straight line. Feed cuts through to completion. Never start saw with workpiece touching blade or pull workpiece from behind blade. Never back workpiece out of cut, move it sideways, or perform a "freehand" operation. Never plunge cut.

PUSH STICKS/PUSH BLOCKS. To reduce risk of accidental blade contact, use push sticks/push blocks whenever possible. In event of an accident, these will often take damage that would have occurred to hands/fingers.

FENCE. To reduce risk of kickback, make sure fence remains properly adjusted and parallel with blade. Always lock fence before using. Do not use fence while using miter gauge.

CUT-OFF PIECES. To avoid risk of injury due to blade contact, turn saw ***OFF*** and allow blade to completely stop before removing cut-off pieces near blade or trapped between blade and table insert. Never use your hands to move cut-off pieces away from blade while saw is running.

BLADE ADJUSTMENTS. Adjusting blade height or tilt during operation increases risk of crashing blade and sending metal fragments flying with deadly force at operator or bystanders. Only adjust blade height and tilt when blade is completely stopped and saw is ***OFF***.

CHANGING BLADES. Accidental startup while changing saw blade can result in serious injury. To reduce risk of accidental blade contact, always disconnect power before changing blades.

DAMAGED SAW BLADES. Damaged saw blade teeth can become deadly projectiles. Never use blades that have been dropped or damaged.

DADO AND RABBET OPERATIONS. Dado and rabbeting operations require special attention since they must be performed with blade guard removed, which increases risk of blade contact. DO NOT attempt dado or rabbeting operations without first reading these sections in this manual.

CUTTING CORRECT MATERIAL. Cutting metal, glass, stone, tile, etc., increases risk of operator injury due to kickback or flying particles. Only cut natural and man-made wood products, laminate-covered wood products, and some plastics. Never cut materials not intended for this saw.

Preventing Kickback

Below are ways to avoid the most common causes of kickback:

- Only cut workpieces with at least one smooth and straight edge. DO NOT cut warped, cupped or twisted wood.
- Keep the blade guard installed and working correctly for all through cuts.
- Never attempt freehand cuts. If the workpiece is not fed parallel with the blade, kickback will likely occur. Always use the rip fence or miter gauge to support the workpiece.
- Make sure the spreader or riving knife is aligned with the blade. A misaligned spreader or riving knife can cause the workpiece to catch or bind, increasing the chance of kickback.
- Take the time to check and adjust the rip fence parallel with the blade; otherwise, the chances of kickback are extreme.
- The spreader or riving knife maintains the kerf in the workpiece, reducing the chance of kickback. Always use the riving knife for all non-through operations, unless a dado blade is installed. Always use the spreader with the blade guard for all through cuts.
- Feed cuts through to completion. Anytime you stop feeding a workpiece in the middle of a cut, the chance of kickback is greatly increased.
- Keep the blade guard installed and in good working order. Only remove it when performing non-through cuts and immediately re-install the blade guard when finished. Remember, always use the riving knife for all non-through operations, unless a dado blade is installed.
- Make multiple, shallow passes when performing a non-through cut. Making a deep non-through cut will greatly increase the chance of kickback.
- Never move the workpiece backwards or try to back it out of a cut while the blade is moving. If you cannot complete a cut for some reason, stop the saw motor and allow the blade to completely stop before backing the workpiece out. Promptly fix the condition that prevented you from completing the cut.

Protecting Yourself From Kickback

Even if you know how to prevent kickback, it may still happen. Here are some ways to protect yourself if kickback DOES occur:

- Stand to the side of the blade during every cut. If kickback does occur, the thrown workpiece usually travels directly in front of the blade.
- Wear safety glasses or a face shield. In the event of kickback, your eyes and face are the most vulnerable part of your body.
- Never, for any reason, place your hand behind the blade. Should kickback occur, your hand will be pulled into the blade, which could cause amputation.
- Use a push stick to keep your hands farther away from the moving blade. If kickback occurs, the push stick will most likely take the damage your hand would have received.
- Use featherboards or anti-kickback devices to assist with feeding and prevent or slow down kickback.

⚠CAUTION

Statistics show that most common accidents among table saw users can be linked to kickback. Kickback is typically defined as the high-speed expulsion of stock from the table saw toward its operator. In addition to the danger of the operator or others in the area being struck by the flying stock, it is often the case that the operator's hands are pulled into the blade during kickback.

SECTION 2: POWER SUPPLY

Availability

Before operating the machine, consider the availability and proximity of the required power supply circuit. If an existing circuit does not meet the requirements for this machine, a new circuit must be installed. To minimize the risk of electrocution, fire, or equipment damage, installation work and electrical wiring must be done by an electrican or qualified service personnel in accordance with all applicable codes and standards.



⚠WARNING

Electrocution, fire, shock, or equipment damage may occur if machine is not properly grounded and connected to power supply.

Full-Load Current Rating

The full-load current rating is the amperage a machine draws at 100% of the rated output power. On machines with multiple motors, this is the amperage drawn by the largest motor or sum of all motors and electrical devices that might operate at one time during normal operations.

Full-Load Current Rating at 120V ..... 15 Amps

The full-load current is not the maximum amount of amps that the machine will draw. If the machine is overloaded, it will draw additional amps beyond the full-load rating.

If the machine is overloaded for a sufficient length of time, damage, overheating, or fire may result—especially if connected to an undersized circuit. To reduce the risk of these hazards, avoid overloading the machine during operation and make sure it is connected to a power supply circuit that meets the specified circuit requirements.

⚠WARNING

Serious injury could occur if you connect machine to power before completing setup process. DO NOT connect to power until instructed later in this manual.

120V Circuit Requirements

This machine is prewired to operate on a power supply circuit that has a verified ground and meets the following requirements:

Voltage.....120V
Cycle.....60 Hz
Phase..... Single-Phase
Power Supply Circuit ..... 20 Amps

A power supply circuit includes all electrical equipment between the breaker box or fuse panel in the building and the machine. The power supply circuit used for this machine must be sized to safely handle the full-load current drawn from the machine for an extended period of time. (If this machine is connected to a circuit protected by fuses, use a time delay fuse marked D.)

⚠CAUTION

For your own safety and protection of property, consult an electrician if you are unsure about wiring practices or electrical codes in your area.

Note: *Circuit requirements in this manual apply to a dedicated circuit—where only one machine will be running on the circuit at a time. If machine will be connected to a shared circuit where multiple machines may be running at the same time, consult an electrician or qualified service personnel to ensure circuit is properly sized for safe operation.*

Polarized Plug

This tool is double-insulated and therefore does not have a grounding wire or plug. The two-pronged, NEMA 1-15 plug has a polarized end; this means that one prong (the neutral connector) is wider than the other (the hot connector). Polarized plugs must be used only with polarized receptacles. Do not attempt to plug this machine into a non-polarized receptacle. If a polarized receptacle is not available, a qualified electrical technician will have to install one before the machine can be plugged in.

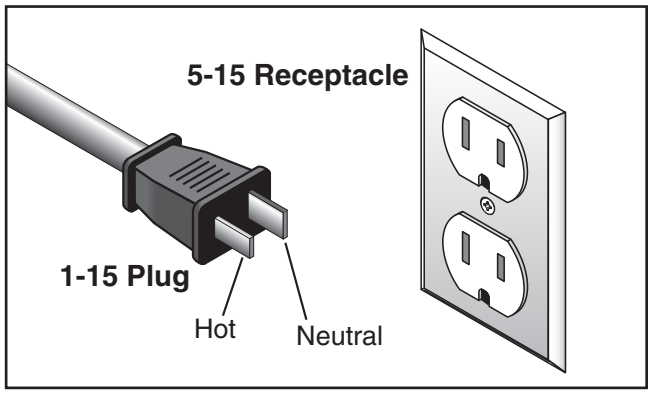

Figure 5. Typical 1-15 plug and receptacle.

Extension Cords

When using extension cords, make sure the cords are rated for outdoor use. Outdoor use cords are marked with a "W-A" or a "W" to signify their rating. Always check to make sure that the extension cords are in good working order and free of any type of damage, such as exposed wires, cuts, creased bends, or missing prongs.

Extension cords cause voltage drop, which may damage electrical components and shorten motor life. Voltage drop increases as the extension cord size gets longer and the gauge size gets smaller (higher gauge numbers indicate smaller sizes. When using extension cords, always choose the shortest cord possible, with the greatest-sized gauge.

Below is a list of minimum gauge sizes needed for running this tool at different lengths:

50 Feet.....12AWG

SECTION 3: SETUP

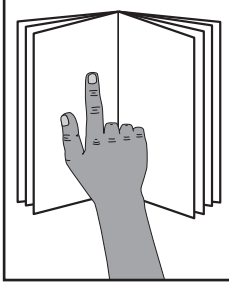

⚠WARNING

This machine presents serious injury hazards to untrained users. Read through this entire manual to become familiar with the controls and operations before starting the machine!



⚠WARNING

Wear safety glasses during the entire setup process!



⚠CAUTION

This machine and its components are heavy. Get lifting help to move heavy items.

Needed for Setup

The following items are needed, but not included, for the setup/assembly of this machine.

Description	Qty
• An Assistant	1
• Wrench or Socket 13mm	1
• Dust Collection System	1
• Dust Hose 2½"	1
• Hose Clamps 2½"	2
• Hex Wrench 3mm	1
• Straightedge	1

Unpacking

This machine was carefully packaged for safe transport. When unpacking, separate all enclosed items from packaging materials and inspect them for shipping damage. ***If items are damaged, please call us immediately at (570) 546-9663.***

IMPORTANT: Save all packaging materials until you are completely satisfied with the machine and have resolved any issues between Grizzly or the shipping agent. *You MUST have the original packaging to file a freight claim. It is also extremely helpful if you need to return your machine later.*

Inventory

The following is a list of items shipped with your machine. Before beginning setup, lay these items out and inventory them.

If any non-proprietary parts are missing (e.g. a nut or a washer), we will gladly replace them; or for the sake of expediency, replacements can be obtained at your local hardware store.

NOTICE

If you cannot find an item on this list, carefully check around/inside the machine and packaging materials. Often, these items get lost in packaging materials while unpacking or they are pre-installed at the factory.

Table Saw Box (Figures 6–8)		Qty
A.	Table Saw Unit (Not Shown)	1
B.	Blade Guard	1
C.	Spreader	1
D.	Pawl Assembly	1
E.	Push Stick	1
F.	Arbor Wrench	1
G.	Miter Gauge	1
H.	Riving Knife	1
I.	Table Extension Rest	1
J.	Flat Washers 6mm	2
K.	Cotter Pins	2
L.	Phillips Head Screws M6-1 x 10	2
M.	Fence Lock Knob	1
N.	Table Extension Shafts	2
O.	Fence	1

Roller Stand Box for G0870 (Figure 9)		Qty
P.	Roller Stand (Not Shown)	1
Q.	Left & Right Handles (Not Shown)	1 Ea.
R.	Carriage Bolts M8-1.25 x 40	4
S.	Button Head Cap Screws M8-1.25 x 16	2
T.	Hex Wrench 5mm	1
U.	Flat Wrench 10mm/13mm	1
V.	Wheels	2
W.	Lock Nuts M8-1.25	10
X.	Button Head Cap Screws M8-1.25 x 40	4
Y.	Flat Washers 8mm	6

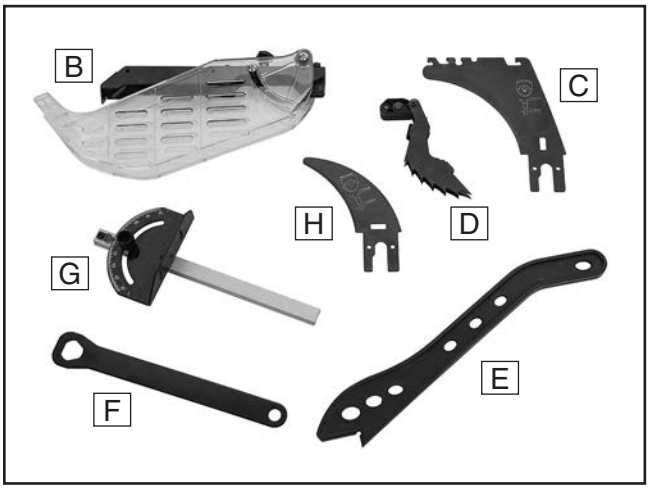

Figure 6. Table saw box inventory 1.

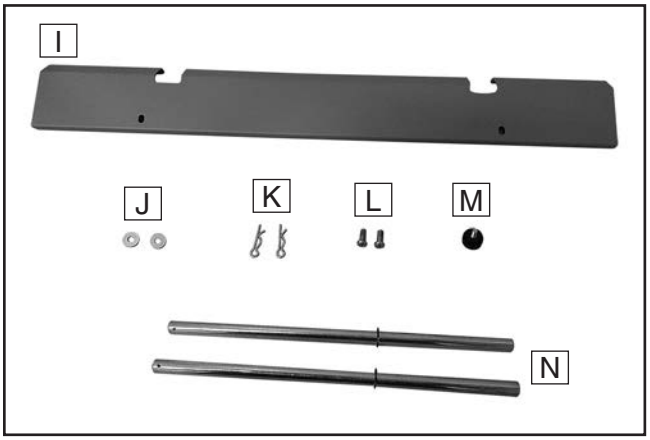

Figure 7. Table saw box inventory 2.

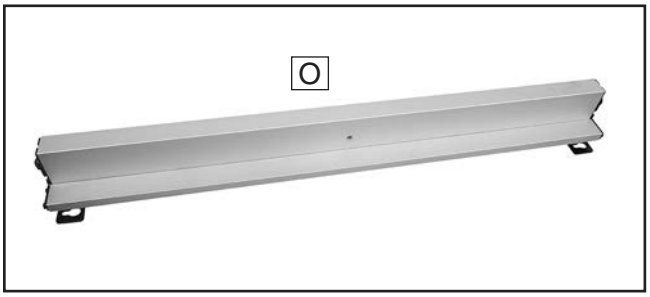

Figure 8. Table saw box inventory 3.

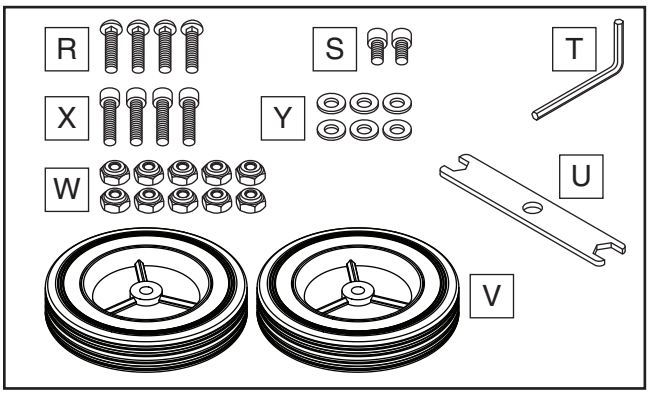

Figure 9. Roller stand box inventory.

Site Considerations

Workbench Load

Refer to the **Machine Data Sheet** for the weight and footprint specifications of your machine. Some workbenches may require additional reinforcement to support the weight of the machine and workpiece materials.

Placement Location

Consider anticipated workpiece sizes and additional space needed for auxiliary stands, work tables, or other machinery when establishing a location for this machine in the shop. Below is the minimum amount of space needed for the machine.

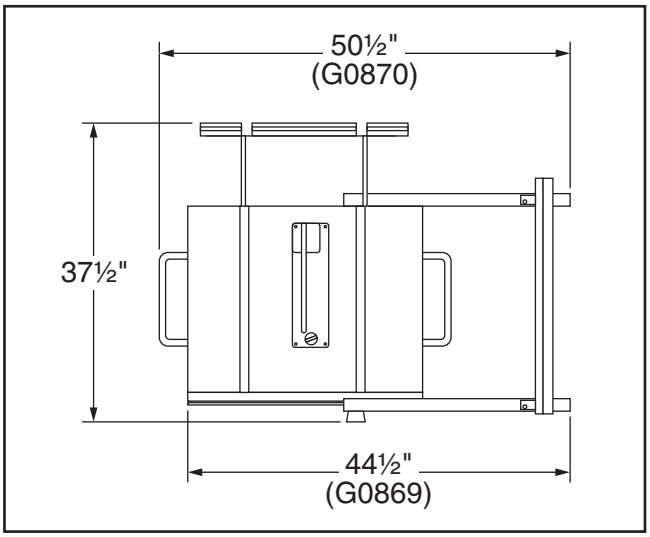

Figure 10. Minimum working clearances.

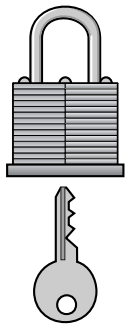

⚠CAUTION

Children and visitors may be seriously injured if unsupervised around this machine. Lock entrances to the shop or disable start switch or power connection to prevent unsupervised use.

Assembly

Assembly of Model G0869/G0870 consists of installing the fence, table extension, and blade guard/spreader with anti-kickback pawls. Additionally, the roller stand that comes with Model G0870 must be assembled and the saw mounted to it.

Installing Fence & Table Extension

1. Place fence on rails with fence mounting holes positioned over (3) pre-installed mounting screws, then tighten fence lock knob to secure (see **Figure 11**).

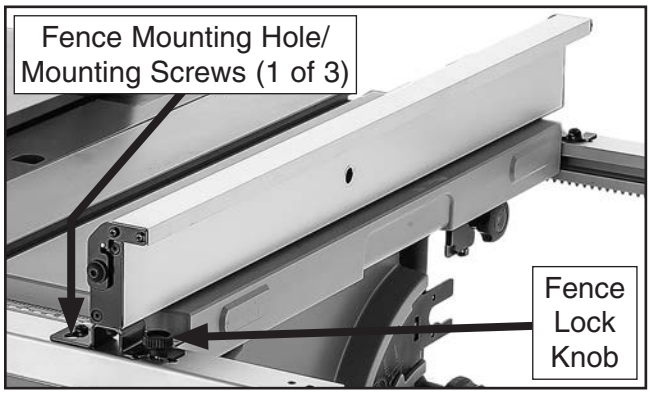

Figure 11. Fence installed.

2. Attach table extension rest to (2) table extension shafts using (2) 6mm flat washers and (2) M6-1 x 10 Phillips head screws (see **Figure 12**).

3. Insert table extension shafts into mounting holes on rear of machine (see **Figure 12**).

4. Thread (2) table extension lock knobs into locations shown in **Figure 12**.

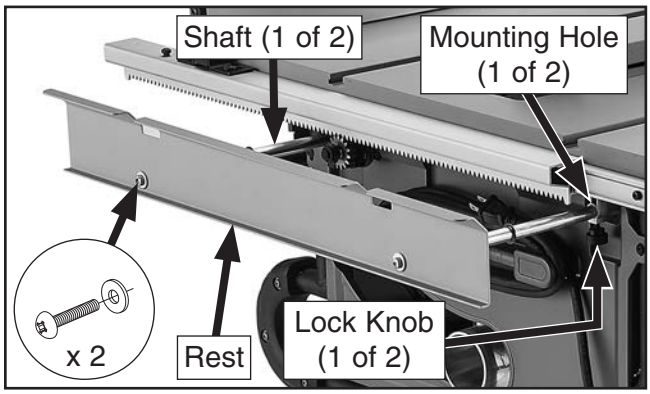

Figure 12. Table extension partially installed.

5. Tip saw on its side, then install (2) cotter pins, one in each table extension shaft, as shown in **Figure 13**.

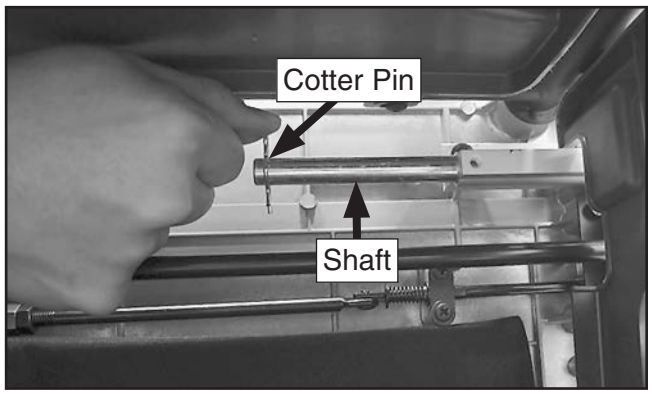

Figure 13. Installing cotter pin on one of two table extension shafts inside saw cabinet.

⚠CAUTION

The blade guard/spreader reduces the risk of laceration and amputation injuries and MUST always be installed on the saw for all normal through cuts. For more information on the blade guard/spreader and how to use it, refer to Page 28.

Installing Blade Guard/Spreader with Anti-Kickback Pawls

1. DISCONNECT MACHINE FROM POWER!

2. Remove table insert, then raise blade all the way up.

3. Move lock lever up to release spreader/riving knife clamp (see **Figure 14**).

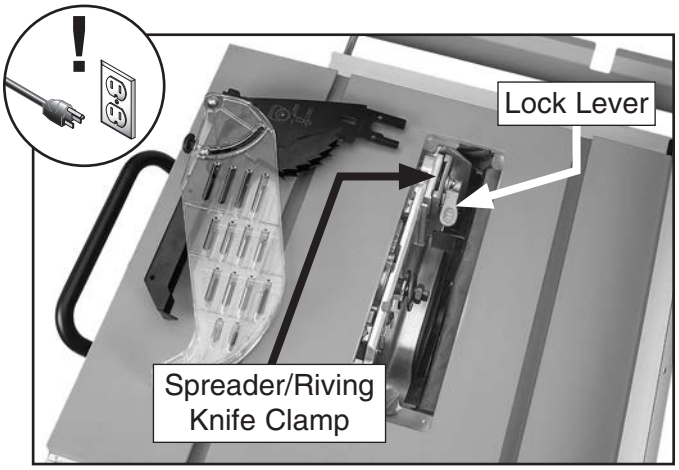

Figure 14. Location of spreader/riving knife clamp and lock lever.

4. Insert blade guard/spreader into spreader/riving knife clamp (see **Figure 15**). Ensure holes in spreader align with bumps inside clamp.

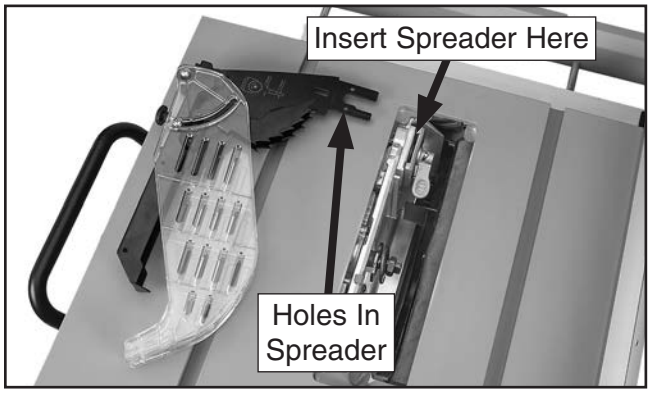

Figure 15. Spreader mounting location.

5. Move lock lever down to secure blade guard/spreader, then tug blade guard/spreader up to make sure it is locked in place.

6. Loosen blade guard knob (see **Figure 16**), slide upper blade guard assembly toward front of saw, and remove it from spreader.

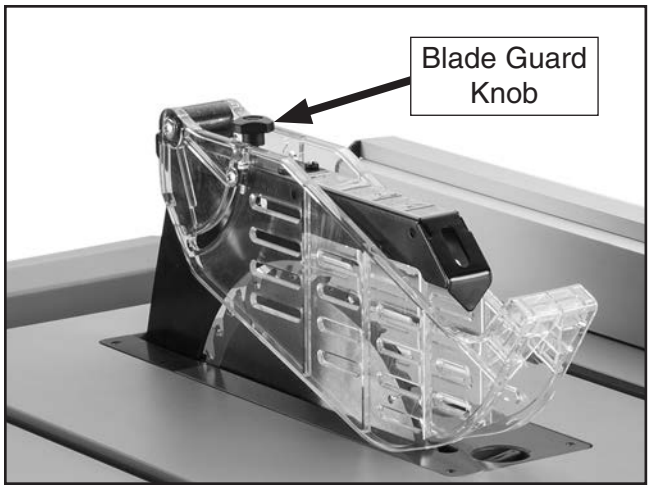

Figure 16. Location of blade guard knob for installing anti-kickback pawls.

7. Insert front of pawl assembly into spreader where shown in **Figure 17**, then pivot back of pawl assembly down and snap in place.

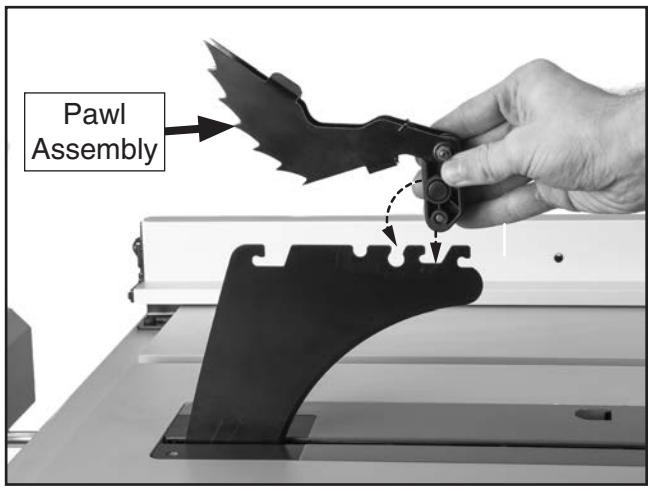

Figure 17. Installing anti-kickback pawls onto spreader.

8. Re-install upper blade guard assembly and tighten blade guard knob (see **Figure 16**).

Assembling Roller Stand (G0870)

1. Attach (2) wheels to axle with (2) 8mm flat washers and (2) M8-1.25 lock nuts (see **Figure 18**).

2. Attach left handle to stand body with (2) M8-1.25 x 16 button head cap screws (see **Figure 18**).

3. Attach right handle to stand body with (4) M8-1.25 x 40 button head cap screws and (4) M8-1.25 lock nuts (see **Figure 18**).

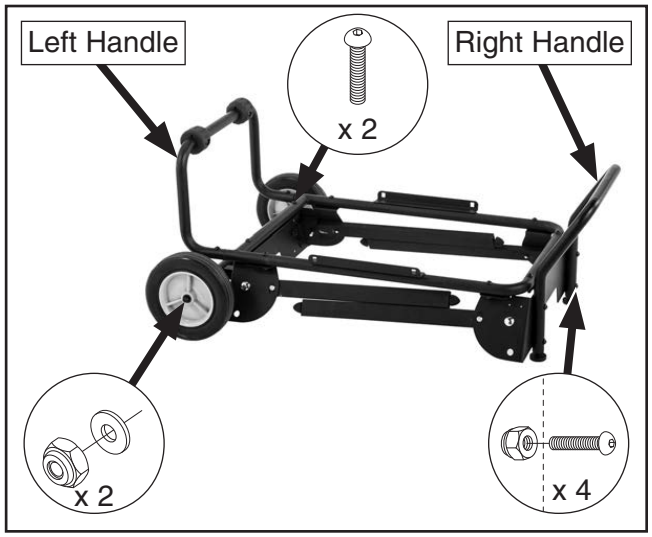

Figure 18. Roller stand assembly.

Mounting Table Saw to Roller Stand (G0870 Only)

1. Push leg lock buttons in and unfold legs until lock buttons click into place in holes shown in **Figure 19**.

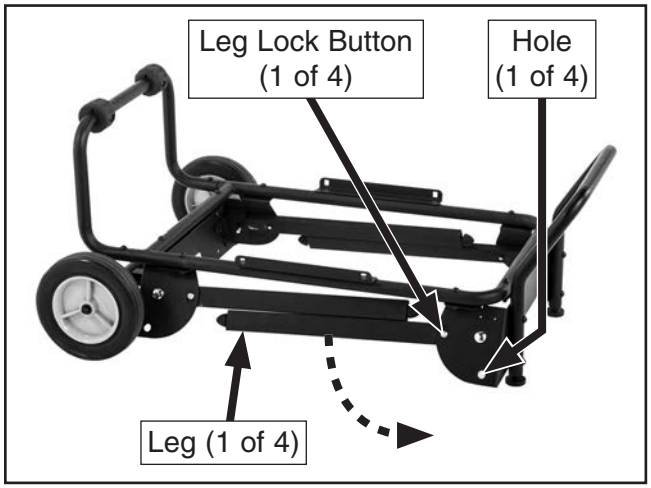

Figure 19. Location of stand legs, leg lock buttons, and leg lock holes.

2. Place table saw unit on stand and secure with (4) M8-1.25 x 40 carriage bolts, (4) 8mm flat washers, and (4) M8-1.25 lock nuts (see **Figure 20**).

Note: *The table saw can mount to the stand facing either direction—with the stand wheels oriented to the left or to the right.*



Figure 20. Model G0869 mounted on Model G0871 Roller Stand.

Dust Collection

⚠CAUTION

This machine creates a lot of wood chips/dust during operation. Breathing airborne dust on a regular basis can result in permanent respiratory illness. Reduce your risk by wearing a respirator and capturing the dust with a dust-collection system.

Minimum CFM at Dust Port: 150 CFM
Do not confuse this CFM recommendation with the rating of the dust collector. To determine the CFM at the dust port, you must consider these variables: (1) CFM rating of the dust collector, (2) hose type and length between the dust collector and the machine, (3) number of branches or wyes, and (4) amount of other open lines throughout the system. Explaining how to calculate these variables is beyond the scope of this manual. Consult an expert or purchase a good dust collection "how-to" book.

To connect dust collection system to machine:

1. Fit the 2½" dust hose over the dust port, as shown in **Figure 21**, and secure in place with a hose clamp.



Figure 21. Dust hose attached to dust port.

2. Tug the hose to make sure it does not come off. **Note:** *A tight fit is necessary for proper performance.*

Test Run

Once assembly is complete, test run the machine to ensure it is properly connected to power and safety components are functioning correctly.

If you find an unusual problem during the test run, immediately stop the machine, disconnect it from power, and fix the problem BEFORE operating the machine again. The **Troubleshooting** table in the **SERVICE** section of this manual can help.

The Test Run consists of verifying that the motor powers up and runs correctly.

⚠WARNING

Serious injury or death can result from using this machine BEFORE understanding its controls and related safety information. DO NOT operate, or allow others to operate, machine until the information is understood.

⚠WARNING

DO NOT start machine until all preceding setup instructions have been performed. Operating an improperly set up machine may result in malfunction or unexpected results that can lead to serious injury, death, or machine/property damage.

To test run machine:

1. Clear all setup tools away from machine.

2. Connect machine to power supply.

3. Turn machine ***ON***, verify motor operation, and then turn machine ***OFF***.

   The motor should run smoothly and without unusual problems or noises. If machine *does not* run smoothly, or you notice unusual problems or noises, immediately disconnect machine from power and call Tech Support for help.

SECTION 4: OPERATIONS

Operation Overview

The purpose of this overview is to provide the novice machine operator with a basic understanding of how the machine is used during operation, so the machine controls/components discussed later in this manual are easier to understand.

Due to the generic nature of this overview, it is **not** intended to be an instructional guide. To learn more about specific operations, read this entire manual, seek additional training from experienced machine operators, and do additional research outside of this manual by reading "how-to" books, trade magazines, or websites.

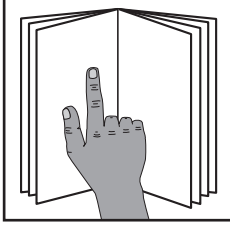

⚠WARNING

To reduce your risk of serious injury, read this entire manual BEFORE using machine.

⚠WARNING

Eye injuries, respiratory problems, or hearing loss can occur while operating this tool. Wear personal protective equipment to reduce your risk from these hazards.







NOTICE

If you are not experienced with this type of machine, WE STRONGLY RECOMMEND that you seek additional training outside of this manual. Read books/magazines or get formal training before beginning any projects. Regardless of the content in this section, Grizzly Industrial will not be held liable for accidents caused by lack of training.

To complete a typical operation, the operator does the following:

1. Examines workpiece to make sure it is suitable for cutting.
2. Adjusts blade tilt, if necessary, to correct angle for desired cut.
3. Adjusts blade height no more than ¼" higher than thickness of workpiece.
4. Adjusts fence to desired width of cut, then locks it in place.
5. Checks outfeed side of machine for proper support and to make sure workpiece can safely pass all the way through blade without interference.
6. Puts on safety glasses, respirator, and hearing protection, and locates push sticks/blocks if needed.
7. Starts saw.
8. Feeds workpiece all the way through blade while maintaining firm pressure on workpiece against table and fence, and keeping hands and fingers out of blade path and away from blade.
9. Stops machine immediately after cut is complete.

Workpiece Inspection

Some workpieces are not safe to cut on this machine or may need to be modified before they can be safely cut. **Before cutting, inspect all workpieces for the following:**

- ***Material Type:*** This machine is intended for cutting natural and man-made wood products, laminate-covered wood products, and some plastics. Cutting drywall or cementitious backer board creates extremely fine dust and may reduce the life of the motor bearings. This machine is NOT designed to cut metal, glass, stone, tile, etc.; cutting these materials with a table saw greatly increases the risk of injury and damage to the saw or blade.

- ***Foreign Objects:*** Nails, staples, dirt, rocks and other foreign objects are often embedded in wood. While cutting, these objects can become dislodged and hit the operator, cause kickback, or break the blade, which might then fly apart. Always visually inspect your workpiece for these items. If they can't be removed, DO NOT cut the workpiece.

- ***Large/Loose Knots:*** Loose knots can become dislodged during the cutting operation. Large knots can cause kickback and machine damage. Choose workpieces that do not have large/loose knots or plan ahead to avoid cutting through them.

- ***Wet or "Green" Stock:*** Cutting wood with a moisture content over 20% causes unnecessary wear on the blades, increases the risk of kickback, and yields poor results.

- ***Excessive Warping:*** Workpieces with excessive cupping, bowing, or twisting are dangerous to cut because they are unstable and may move unpredictably when being cut.

- ***Minor Warping:*** Slightly cupped workpieces can be safely supported with cupped side facing the table or fence; however, workpieces supported on the bowed side will rock during the cut, which could cause kickback.

Non-Through & Through Cuts

Non-Through Cuts

A non-through cut is a sawing operation where the blade does not protrude above the top face of the wood stock, as shown in the **Figure** below.

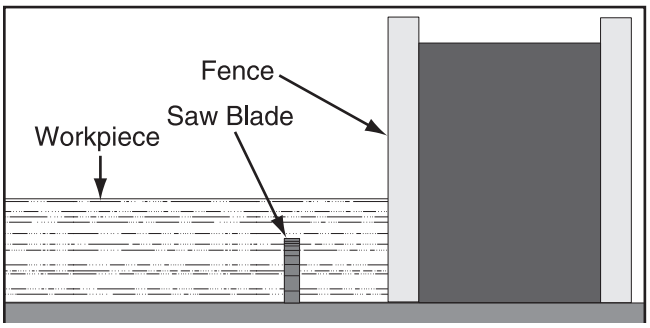

Figure 22. Example of a non-through cut.

Examples of non-through cuts include dadoes and rabbets. Non-through cuts have a higher risk of injury from kickback because the blade guard must be removed. However, the riving knife MUST be installed because it still provides some protection.

IMPORTANT: When making non-through cuts with a dado blade, do not attempt to cut the full depth in one pass. Instead, take multiple light passes to reduce the load on the blade.

A dado blade smaller than 10" will require removal of the riving knife, because the riving knife will be higher than the blade.

Through Cuts

A through cut is a sawing operation in which the workpiece is completely sawn through, as shown in the **Figure** below. Examples of through cuts are rip cuts, cross cuts, miter cuts, and beveled cuts. The blade guard assembly MUST be used when performing through cuts.

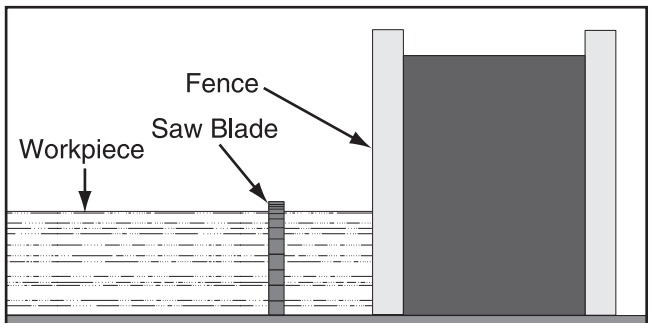

Figure 23. Example of a through cut (blade guard not shown for illustrative clarity).

Blade Requirements

When choosing a main blade, make sure the blade size meets the requirements listed below. The thickness of the blade body and teeth can be measured with calipers or any precision measuring device.

Blade Size Requirements:

- Body Thickness: 0.063"–0.094" (1.8-2.4mm)
- Kerf (Tooth) Thickness: 0.102"–0.126" (2.6-3.2mm)
- Riving Knife Thickness: 0.1" (2.5mm)
- Blade Size Required for Riving Knife: 10"

Blade Selection

This section on blade selection is by no means comprehensive. Always follow the saw blade manufacturer's recommendations to ensure safe and efficient operation of your table saw.

Ripping Blade Features:

- Best for cutting with the grain
- 20-40 teeth
- Flat-top ground tooth profile
- Large gullets for large chip removal

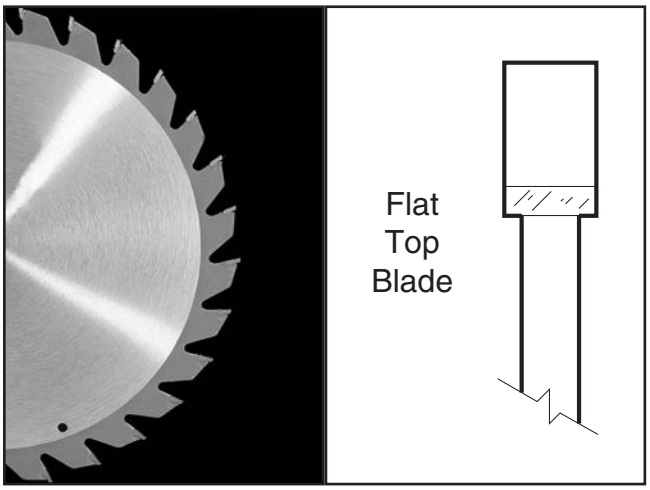

Figure 24. Ripping blade.

Crosscut blade features:

- Best for cutting across the grain
- 60-80 teeth
- Alternate top bevel tooth profile
- Small hook angle and a shallow gullet

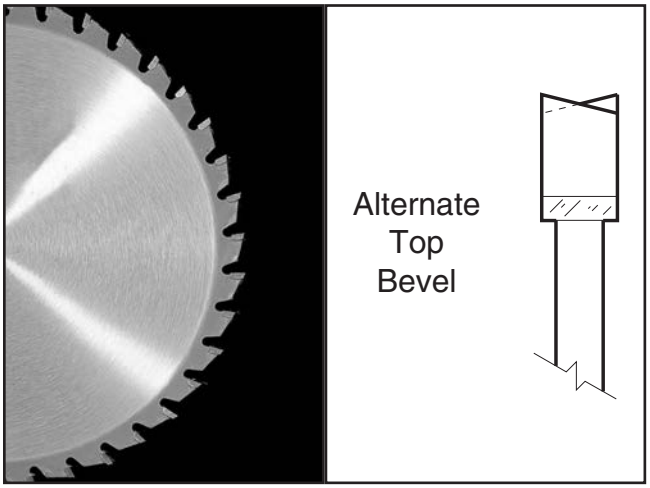

Figure 25. Crosscutting blade.

Combination blade features:

- Designed to cut both with and across grain
- 40-50 teeth
- Alternate top bevel and flat, or alternate top bevel and raker tooth profile
- Teeth are arranged in groups
- Gullets are small and shallow (similar to a cross-cut blade), then large and deep (similar to a ripping blade

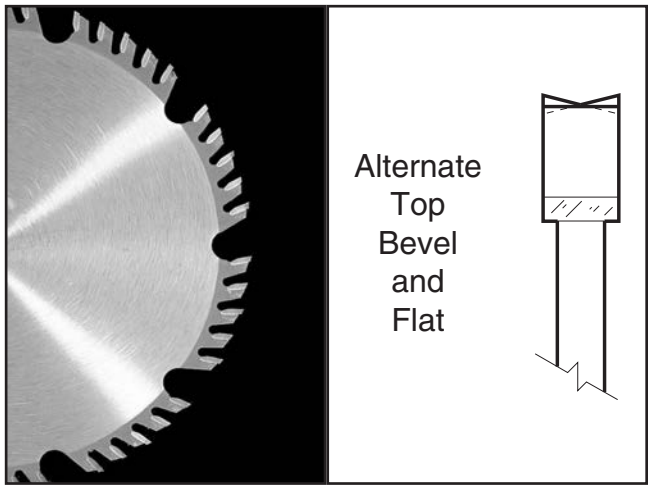

Figure 26. Combination blade.

Laminate blade features:

- Best for cutting plywood or veneer
- 40-80 teeth
- Triple chip tooth profile
- Very shallow gullet

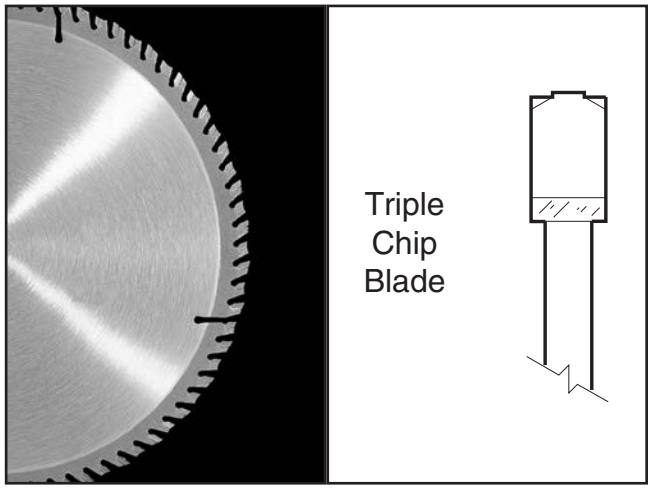

Figure 27. Laminate blade.

Thin Kerf Blade: A blade with thinner kerf than a standard blade. Since the spreader/riving knife included with this table saw is sized for standard blades, thin kerf blades cannot be used on this saw unless they meet the **Blade Requirements** specified in this manual; otherwise, they will increase the risk of kickback.

Dado Blades

Stacked Dado Blade (see below): Multiple blades are stacked together to control the cutting width. Stacked dado blades are more expensive than wobble blades, but typically produce higher quality results.

Wobble Dado Blade: A single blade mounted at a slight angle on an arbor hub. The blade angle is adjustable on the hub, and the width of the dado cut is controlled by the angle setting of the blade.

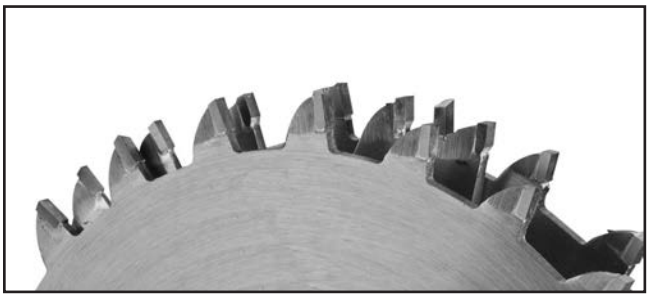

Figure 28. Stacked dado blade.

Blade Installation

Review this section, even if your saw blade came pre-installed.

To remove & install blade:

1. DISCONNECT MACHINE FROM POWER!

2. Raise arbor all the way up, then remove table insert and blade guard/spreader (see **Page 28**) or riving knife (see **Page 31**).

⚠CAUTION

To reduce risk of injury, always disconnect power to saw before changing blades. Since blade is sharp, use extra care and wear gloves when installing it.

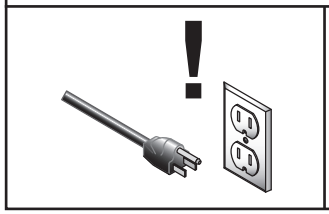



3. Push arbor lock in (see **Figure 29**) and rotate existing blade until it locks in place (or rotate arbor if no blade is installed).

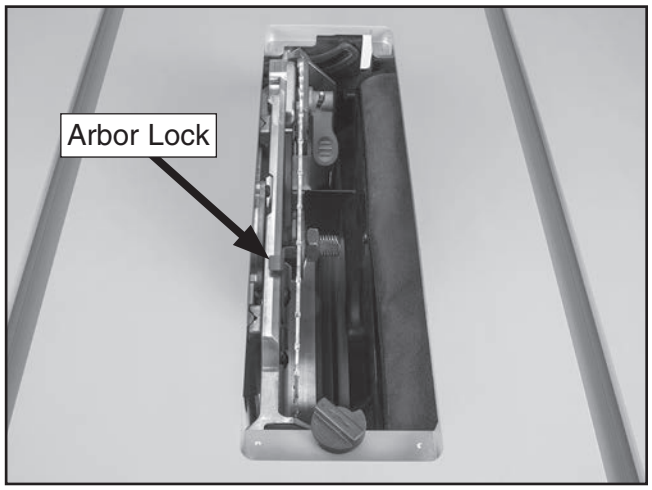

Figure 29. Location of arbor lock.

4. While pressing arbor lock, use included arbor wrench to loosen and remove arbor nut, flange, and blade (see **Figure 30**). Arbor nut has right-hand threads; rotate counterclockwise to loosen.



Figure 30. Example of removing table saw blade.

5. Install new blade, flange and arbor nut on arbor, as shown in **Figure 31**, with teeth facing front of the saw.

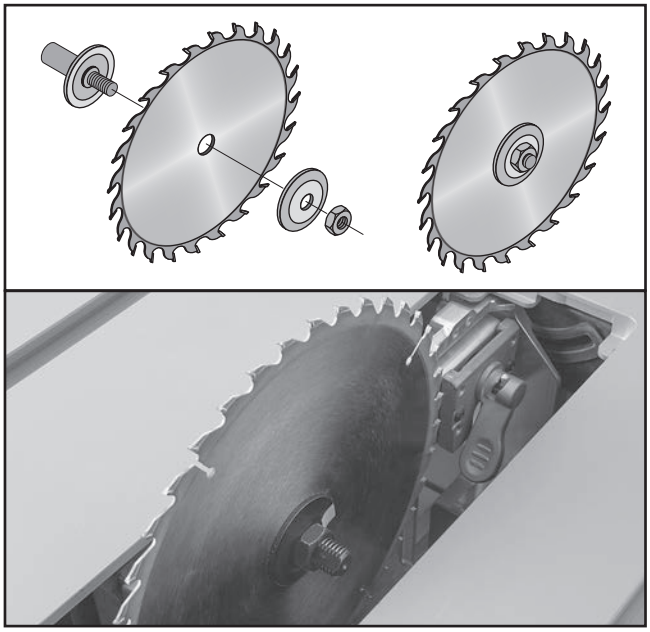

Figure 31. Correct order of installation with teeth facing the correct direction.

6. Re-install blade guard/spreader (see **Page 28**) or riving knife (see **Page 31**), and table insert.

Blade Guard Assembly

The term "blade guard" refers to the assembly that consists of the clear polycarbonate shield, the spreader, and the anti-kickback pawls on each side of the spreader (see **Figure 32**). Each of these components has important safety functions during operation of the saw.

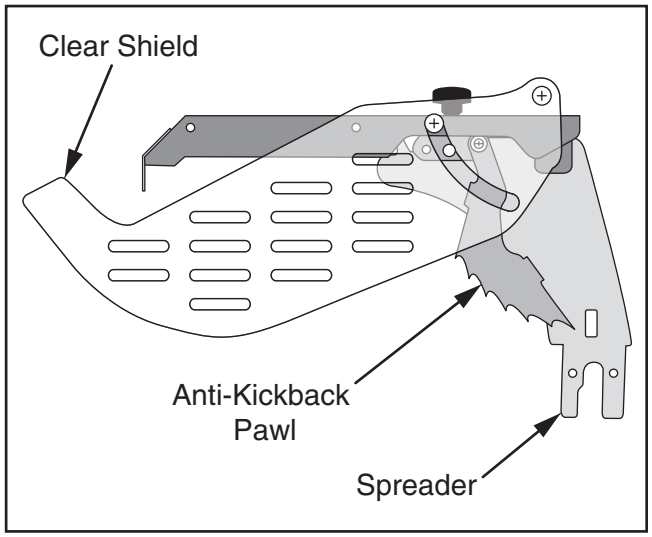

Figure 32. Blade guard assembly components.

Guard

The clear polycarbonate guard allows the operator to watch the blade cut the workpiece during operation. This guard is designed to lift as the workpiece is pushed into the blade and remain in contact with the workpiece throughout the entire cut.

The guard reduces injury risk by providing a barrier around the blade that prevents accidental contact and contains flying wood chips.

To ensure that the guard does its job effectively, the guard must always be in the downward position against the table during idle operation, and the hinge mechanism must be maintained in good working condition so the guard can freely pivot up and down to accommodate the height of the workpiece and return to the table surface.

Spreader

The spreader is a metal plate that prevents the newly cut kerf of the workpiece from pinching the backside of the blade, causing kickback.

The spreader also acts as a barrier behind the blade to shield hands from being pulled into the blade if a kickback occurs.

⚠CAUTION

In order to work properly, the spreader cannot be bent or misaligned with the blade. If the spreader gets accidentally bent, take the time to straighten it or just replace it. Using a bent or misaligned spreader will increase the risk of kickback! Refer to Page 53 to check or adjust spreader alignment if necessary.

Anti-Kickback Pawls

The anti-kickback pawls allow the workpiece to travel in only one direction. If the workpiece moves backwards, such as during a kickback, the pawls will dig into the workpiece to slow or stop it.

To work properly, the pawls must return to their resting position after pivoting, shown in **Figure 33**.

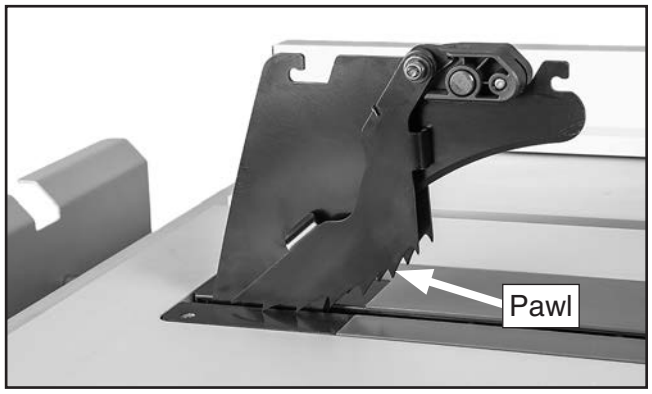

Figure 33. Pawls in resting position.

If the pawls fail to return to the resting position, the pivot area may need to be cleaned or the spring may have been dislodged or broken and will need to be fixed/replaced.

Removing Pawls

You might remove the pawls if you are concerned about them scratching a delicate workpiece, or if you believe that they will obstruct a narrow workpiece and cause feeding difficulty or loss of control. Use your best judgment before removing the pawls, as they are provided for your safety.

⚠CAUTION

We do not recommend removing pawls for normal operations unless absolutely necessary. In most situations, disabling pawls will increase your risk of serious personal injury in event of a kickback.

⚠CAUTION

The pawls are sharp and can lacerate fingers or hands. Use caution, and wear leather gloves when handling the pawls to reduce risk of injury.

To remove pawls:

1. DISCONNECT MACHINE FROM POWER!

2. Loosen blade guard knob (see **Figure 34**), slide upper blade guard assembly toward front of saw, and remove it from spreader.

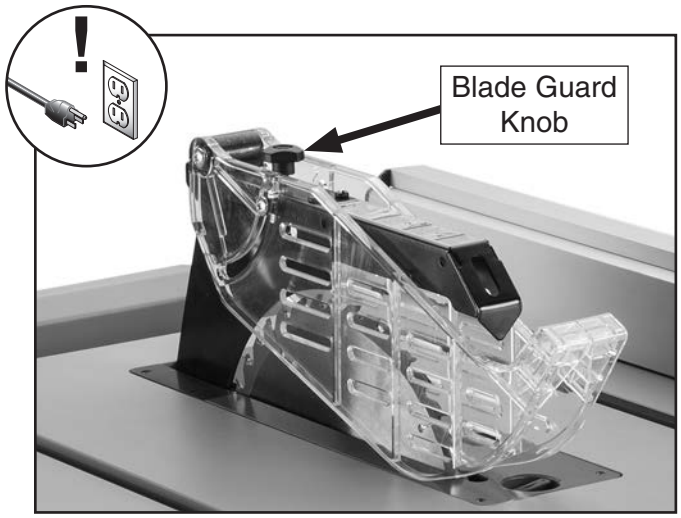

Figure 34. Location of blade guard knob.

3. Push pawl release button, tilt back of pawl assembly up, then lift pawl assembly off of spreader (see **Figure 35**).

4. Re-install upper blade guard assembly and tighten blade guard knob (see **Figure 34** on **Page 29**).

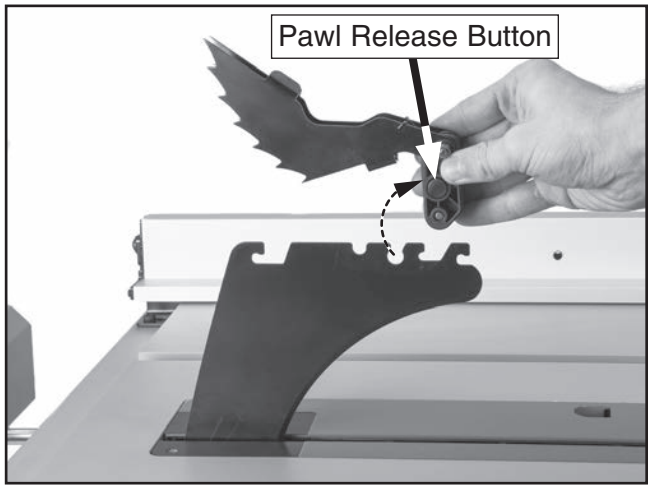

Figure 35. Removing anti-kickback pawls.

Installing Pawls

To install the pawls, insert front of pawl assembly into spreader where shown in **Figure 36**, then pivot back of pawl assembly down and snap in place. Re-install upper blade guard assembly and tighten blade guard knob (see **Figure 34** on **Page 29**).

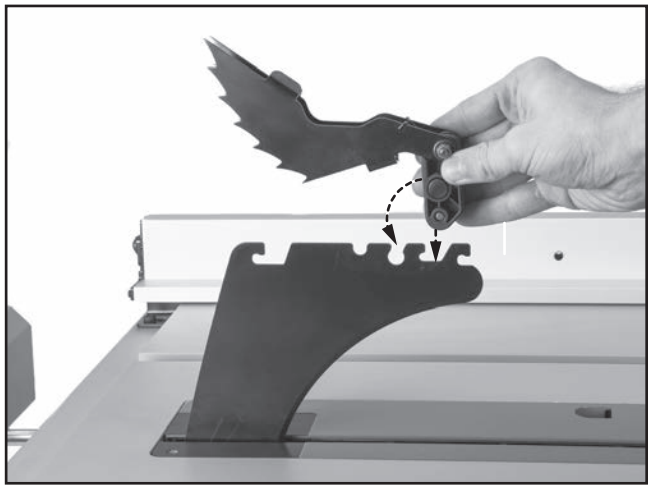

Figure 36. Installing anti-kickback pawls.

When to Use the Blade Guard

The blade guard assembly MUST always be installed on the saw for all normal through cuts (those where the blade cuts all the way through the thickness of the workpiece). If the blade guard is removed for specific operations, always immediately replace it after those operations are complete.

When Not to Use the Blade Guard

The blade guard cannot be used on any non-through cuts (those in which the blade does not cut all the way through the thickness of the workpiece).

IMPORTANT: Whenever the blade guard cannot be used, the riving knife must be installed.

Sometimes the blade guard or its components can get in the way when cutting very narrow workpieces or other specialized cuts. Because the blade guard is provided to decrease your risk of injury, it should not be used if it gets in the way of making a safe cut. Use good judgment!

Riving Knife

The riving knife works in the same manner as the spreader on the blade guard assembly. It is a metal plate that prevents the newly cut workpiece from pinching the backside of the blade and causing kickback.

The key difference between the spreader and the riving knife is that the riving knife mounts below the blade's highest point of rotation, as shown in **Figure 37**.

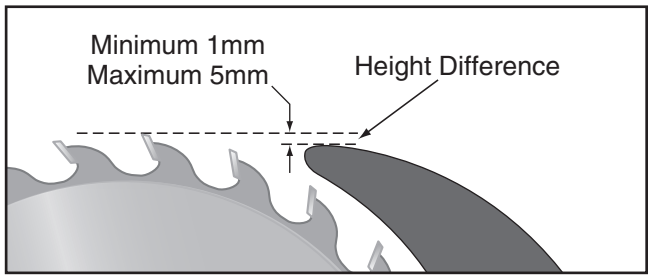

Figure 37. Height difference between riving knife and blade.

The height difference between the riving knife and the blade allows the workpiece to pass over the blade during non-through cuts (those in which the blade does not cut all the way through the thickness of the workpiece).

The riving knife acts as a barrier behind the blade to reduce the risk of hands being pulled into the blade if a kickback occurs.

The riving knife must be kept within the range shown in **Figure 38**. For that reason, we only recommend using a 10" blade for operations that require use of the riving knife.

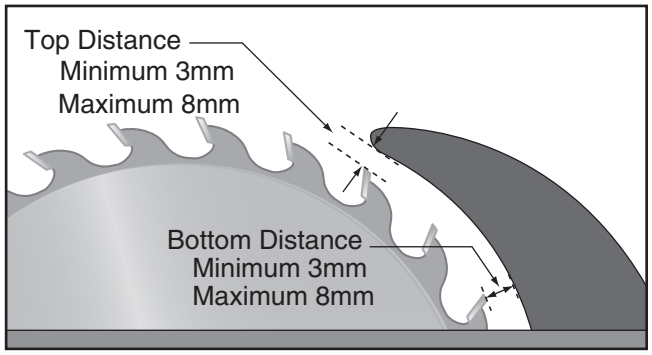

Figure 38. Allowable top and bottom distances between riving knife and blade.

⚠CAUTION

To ensure that riving knife works safely, it MUST be aligned with and correctly adjusted to blade. Refer to Page 53 to check or adjust riving knife alignment.

How to Install the Riving Knife

The riving knife is installed into the spreader/riving knife clamp in the same way as the blade guard/spreader (see **Figure 39**). Refer to **Page 20** for blade guard assembly/installation instructions.

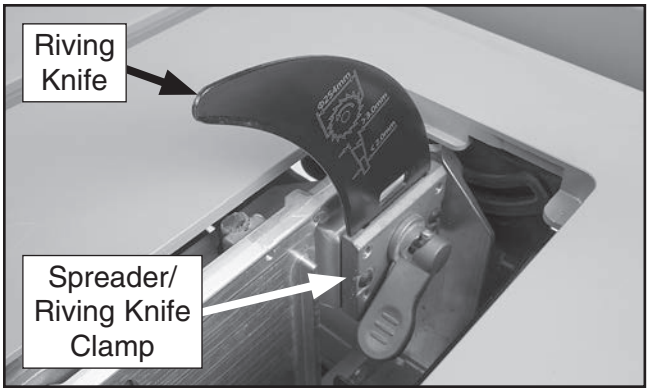

Figure 39. Riving knife installed.

When to Use the Riving Knife

Use the riving knife for all non-through cuts made with a standard table saw blade (i.e., dadoes or rabbet cuts, and when using a tenoning jig), or when using a 10" diameter dado blade.

Also, use the riving knife for operations where the blade guard or its components get in the way of safe operation, such as with very narrow cuts.

When Not to Use the Riving Knife

Do not use the riving knife with a dado blade that has a diameter smaller than 10". Otherwise, the riving knife height will exceed the blade height and the workpiece will hit the riving knife during the cut, forcing the operator into a dangerous situation of trying to turn the saw off with the workpiece stuck halfway through the cut.

In addition, although it is possible to use the riving knife for through-cutting operations, the blade guard offers far more injury protection and risk reduction than the riving knife. Therefore, we **strongly recommend** that you use the blade guard instead of the riving knife for through cuts.

Ripping

"Ripping" means cutting with the grain of a natural wood workpiece. In man-made materials such as MDF or plywood, ripping means cutting lengthwise.

⚠CAUTION

Serious injury can be caused by kickback. Kickback is a high-speed ejection of stock from table saw toward an operator. The operator or bystanders may be struck by flying stock, or operator's hands can be pulled into blade during kickback.

To make a rip cut:

1. Review **Preventing Kickback** on **Page 14** and take necessary precautions to reduce likelihood of kickback.

2. If using natural wood, joint one long edge of workpiece on a jointer.

3. DISCONNECT MACHINE FROM POWER!

4. Ensure that blade guard/spreader is installed.

5. For typical rip cuts, place narrow rip fence attachment in up position; for rip cuts less than 1" wide, place the narrow rip fence in the down position (see **Figure 40**).

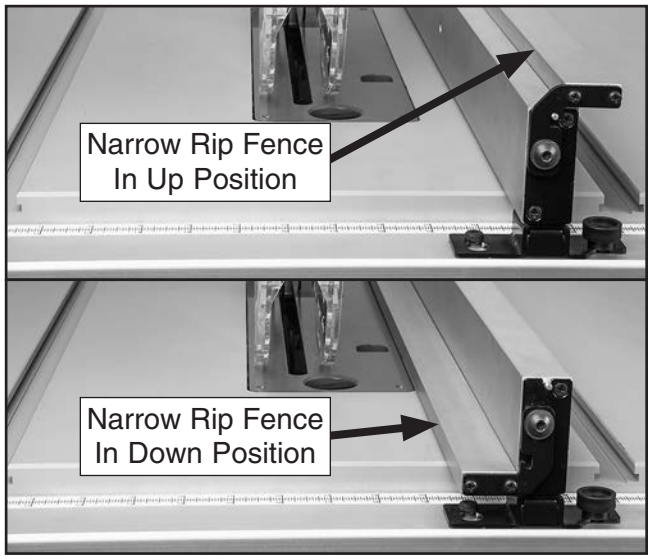

Figure 40. Narrow rip fence positions.

6. Set fence to desired width of cut on scale.

7. Adjust blade height so highest saw tooth protrudes no more than ¼" above workpiece.

8. Set up safety devices such as featherboards or other anti-kickback devices, making sure no safety devices are contacting blade.

9. Plug saw into power source, turn it ***ON***, and allow it to reach full speed.

   Note: *Jointed edge of workpiece must slide against fence during cutting operation.*

10. Use push stick to feed workpiece through saw blade, as shown in **Figure 41**, until workpiece is completely beyond saw blade.

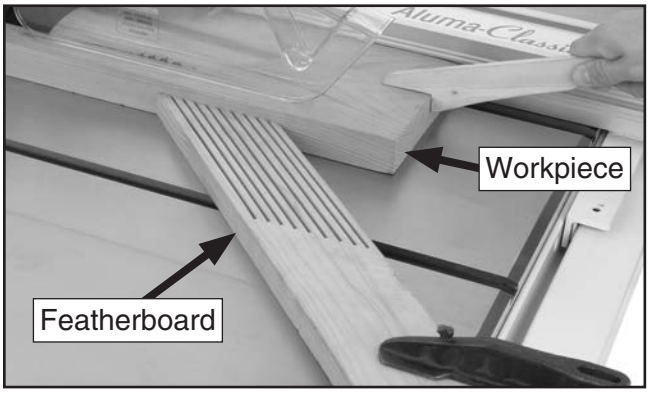

Figure 41. Typical ripping operation.

⚠WARNING

Turn saw *OFF* and allow blade to come to a complete stop before removing cutoff piece. Failure to follow this warning could result in severe lacerations or amputation.

⚠WARNING

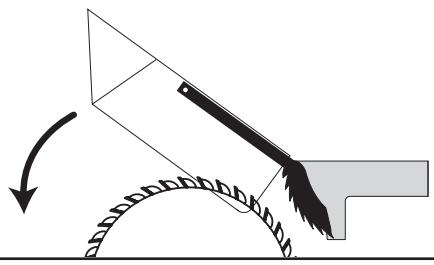

Keep blade guard installed and in down position. Failure to do this could result in serious personal injury or death.

Crosscutting

"Crosscutting" means cutting across the grain of a natural wood workpiece, usually with a miter saw. In other man-made materials, such as MDF or plywood, crosscutting means cutting across the width of the workpiece.

To make a crosscut using a miter gauge:

1. DISCONNECT MACHINE FROM POWER!
2. Ensure that blade guard/spreader is installed.
3. To avoid kickback, move rip fence aside and position miter gauge, adjusted to 90°, in a miter slot.
4. Adjust blade height so teeth protrude no more than ¼" above workpiece.
5. Slide miter gauge near blade and adjust workpiece so blade will cut on waste side of line.
6. Plug in table saw, turn it ***ON***, and allow it to reach full speed.
7. Hold workpiece firmly against face of miter gauge (as shown in **Figure 42**), and ease it through blade until workpiece is completely past saw blade.

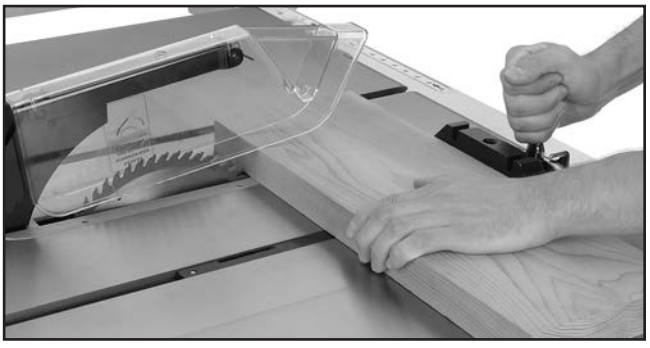

Figure 42. Typical crosscutting operation.

⚠WARNING

Turn saw *OFF* and allow blade to come to a complete stop before removing cutoff piece. Failure to follow this warning could result in severe lacerations or amputation.

Miter Cuts

A miter is an angled crosscut. Miters are usually cut in the same manner as crosscuts, using the miter gauge and a predetermined mark on the workpiece.

To perform a miter cut:

1. DISCONNECT MACHINE FROM POWER!
2. Ensure that blade guard/spreader is installed.
3. Determine angle of cut. If angle needs to be very precise, use a protractor to set miter gauge to blade.
4. Place face of miter gauge against edge of workpiece and place bar across face of workpiece. Use bar as a guide to mark your cut, as shown in **Figure 43**.

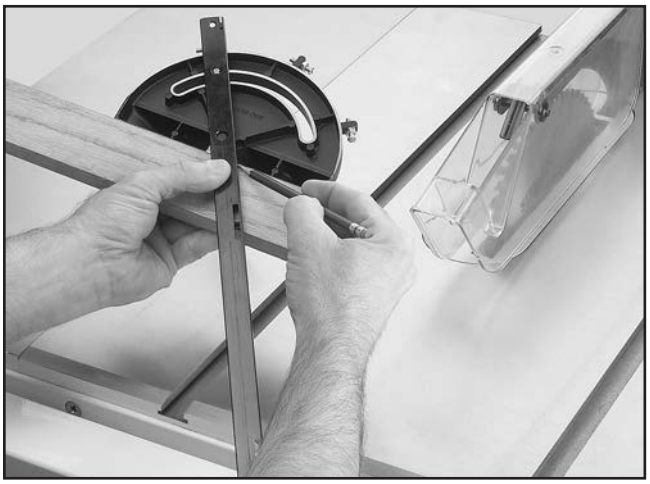

Figure 43. Example of marking miter line.

5. Place miter gauge back into slot and hold workpiece firmly against miter gauge body. Slide miter gauge near blade and adjust workpiece so blade will cut on waste side of line.
6. Proceed to make cut in same manner as described in **Crosscutting** instructions.

Blade Tilt/Bevel Cuts

When the blade tilt collar bolts are properly adjusted (as described starting on **Page 50**), the blade tilt handwheel allows the operator to tilt the blade to the left, between 0° and 45°. This is used most often when cutting bevels, compound miters, or chamfers. **Figure 44** shows an example of the blade when tilted to 45°.

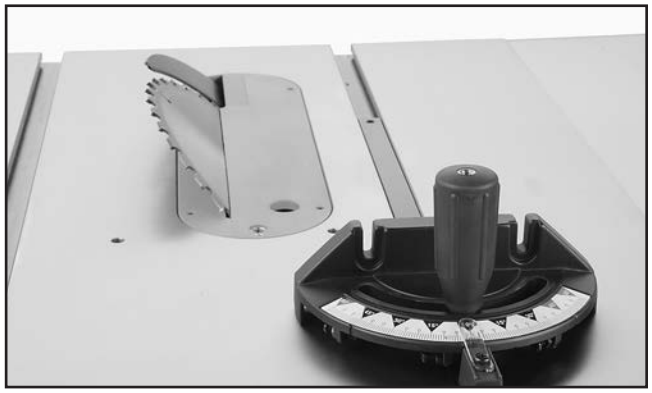

Figure 44. Example of blade tilted to 45° for bevel cutting (blade guard removed for clarity).

Dado Cutting

Commonly used in furniture joinery, a dado is a straight channel cut in the face of the workpiece. Dadoes are "non-through" cuts that can be made with a dado blade or a standard saw blade. The **Figure** below shows a cutaway view of a dado cut being made with a dado blade.

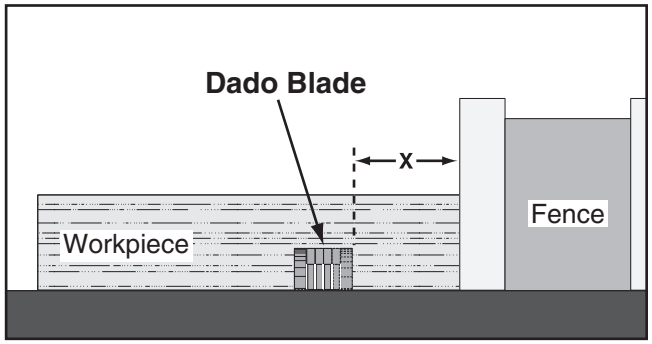

Figure 45. Example of a dado being cut with a dado blade.

The Model G0869/G0870 can accommodate dado blades up to 10" in diameter (see **Accessories** on **Page 44**). However, you MUST install the included riving knife while using a 10" diameter dado blade, as it provides a barrier behind the blade and reduces the risk of hands being pulled into the blade if kickback occurs.

DO NOT use the riving knife if you install a dado blade smaller than 10" in diameter. Otherwise, the riving knife height will exceed the blade height and the workpiece will hit the riving knife during the cut, forcing the operator into a dangerous situation and trying to turn the saw off with the workpiece stuck halfway through the cut.

Note: *You MUST use a dado insert for this operation. This item does not come with model G0869/G0870, however, it can be purchased as an aftermarket accessory (see **Page 44**).*

Installing a Dado Blade

1. DISCONNECT MACHINE FROM POWER!

2. Remove table insert, blade guard assembly or riving knife, arbor nut, flange, and saw blade.

3. Attach and adjust dado blade system according to dado blade manufacturer's instructions, and secure with arbor flange and arbor nut.

4. Install dado table insert.

⚠WARNING

DO NOT make through cuts with a dado blade. The extra width of a dado blade will increase the risk of kickback during a through cut. Dado blades are only intended for non-through cuts. Failure to heed this warning could result in serious injury.

⚠WARNING

Never try to cut a warped board by holding it down against the table. If kickback occurs, your hand could be pulled into the blade, resulting in accidental contact with the rotating blade, causing severe lacerations or amputation.

Cutting Dadoes with a Dado Blade

Because dado blades are much wider than standard blades, they place a greater amount of force against the workpiece when cutting. This additional force increases the risk of kickback, requiring the operator to take additional steps when cutting to keep their injury risk at an acceptable level.

⚠WARNING

Dado blades have a higher risk of kickback than normal blades because their larger size applies stronger forces to the workpiece. This risk increases relative to the depth and width of the cut. To minimize your risk of serious personal injury, ensure that stock is flat and straight, and make multiple light cuts (rather than one deep cut) to achieve the desired cutting depth.

The **Figure** below demonstrates the sequential process of making multiple, light cuts that get progressively deeper. The actual number of cuts used should be determined by workpiece hardness, total dado depth, and feed rate. In general, if you hear the motor slow down during the cut, you are cutting too deep or feeding too fast.

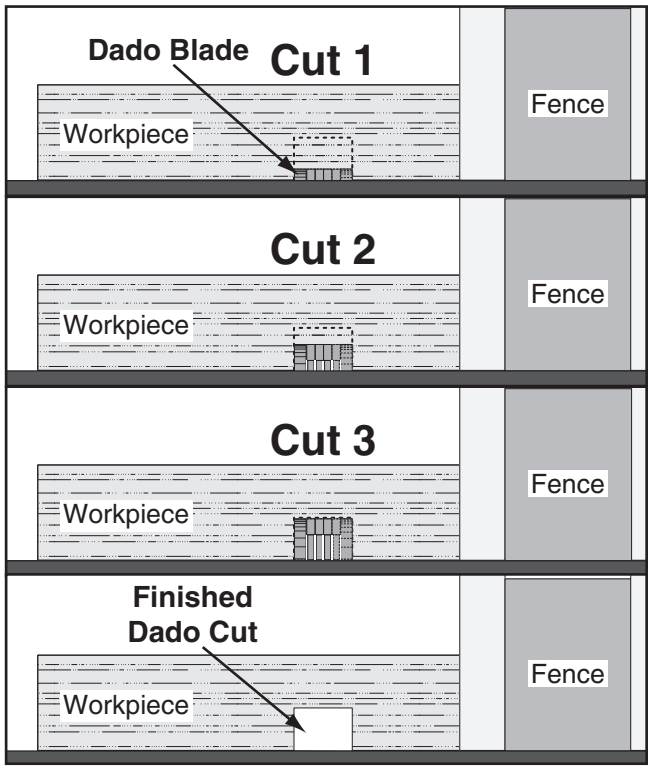

Figure 46. Example of dado being cut with multiple light cuts, instead of one deep cut.

To cut a dado with a dado blade:

1. DISCONNECT MACHINE FROM POWER!
2. Adjust dado blade to desired depth of cut.
3. Adjust distance between fence and inside edge of blade, as shown in **Figure 45** on **Page 34**, to dado length of a workpiece.

   — If dadoing across workpiece, use miter gauge and carefully line up desired cut with dado blade. To reduce kickback, DO NOT use fence in combination with miter gauge.
4. Reconnect saw to power source.
5. Turn saw ***ON***. Blade should run smoothly, with no vibrations.
6. When blade has reached full speed, perform test cut with scrap piece of wood.
7. If cut is satisfactory, repeat cut with actual workpiece.

Cutting Dadoes with a Standard Blade

A ripping blade (described on **Page 25**) is typically the best blade to use when cutting dadoes with a standard blade because it removes sawdust very efficiently.

To use a standard saw blade to cut dadoes:

1. DISCONNECT MACHINE FROM POWER!
2. Mark width of dado cut on workpiece. Include marks on edge of workpiece so cut path can be aligned when workpiece is lying on table.
3. Raise blade up to desired depth of cut (depth of dado channel desired).
4. Set saw up for type of cut you need to make, depending on whether it is a rip cut (**Page 32**) or crosscut (**Page 33**).

5. Align blade to cut one side of dado, as shown in **Figure 47**.

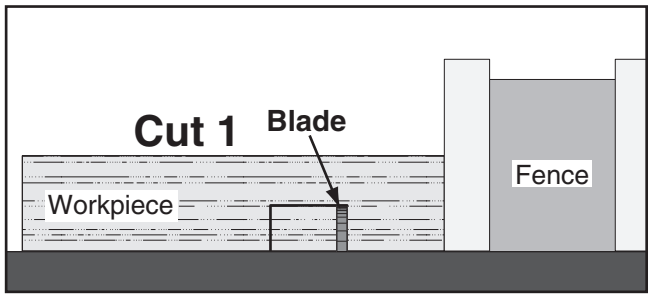

Figure 47. First cut for a single-blade dado.

6. Reconnect saw to power source and turn saw ***ON***. Allow blade to reach full speed, then perform cutting operation.

7. Repeat cutting operation on other side of dado, as shown in **Figure 48**.

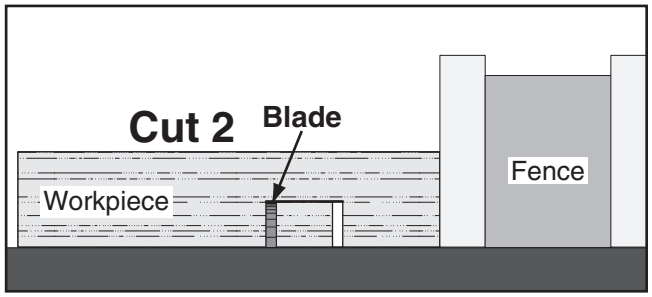

Figure 48. Second cut for a single-blade dado.

8. Make additional cuts (see **Figure 49**) in center of dado to clear out necessary material. Dado is complete when channel is completely cleared out.

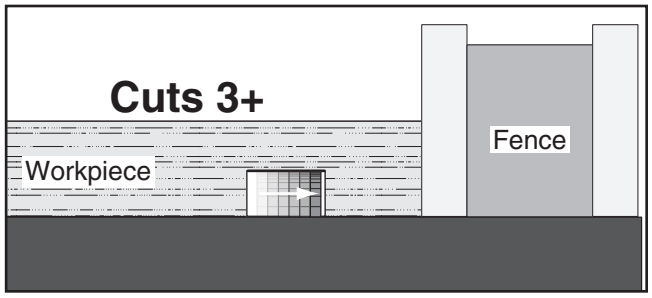

Figure 49. Additional single-blade dado cuts.

Rabbet Cutting

Commonly used in furniture joinery, a rabbet is an L-shaped groove cut in the edge of the workpiece. Rabbets can be cut with either a dado blade or a standard saw blade.

Rabbet cutting on the edge of the workpiece with a dado blade requires a sacrificial fence (see **Figure 50**). Make the sacrificial fence the same length as the fence and ¾" thick. Attach it to the fence with screws or clamps, making sure they are all secure and tight. Raise the blade into the sacrificial fence to the height needed.

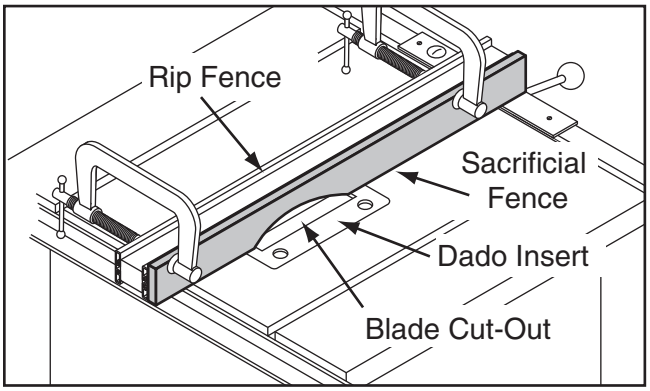

Figure 50. Example of sacrificial fence.

When using a dado blade, the included dado table insert must be installed and used during rabbeting operations.

⚠WARNING

Dado blades have a higher risk of kickback than normal blades because their larger size applies stronger forces to the workpiece. This risk increases relative to the depth and width of the cut. To minimize your risk of serious personal injury, ensure that stock is flat and straight, and make multiple light cuts (rather than one deep cut) to achieve the desired cutting depth.

⚠CAUTION

Always use push sticks, featherboards, push paddles and other safety accessories whenever possible to increase safety and control during operations which require that blade guard be removed from saw. ALWAYS replace blade guard after dadoing is complete.

Cutting Rabbets with a Dado Blade

1. DISCONNECT MACHINE FROM POWER!

2. Adjust dado blade to height needed for rabbeting operation. When cutting deep rabbets, take more than one pass to reduce risk of kickback.

3. Adjust fence and align workpiece to perform cutting operation, as shown in **Figure 51**.

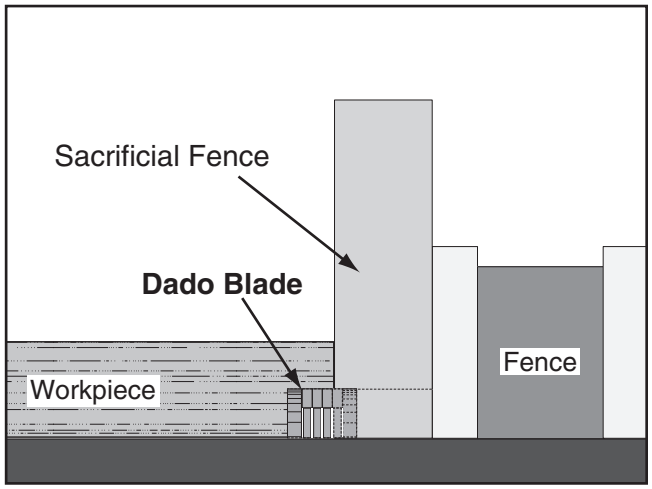

Figure 51. Rabbet cutting.

4. Reconnect saw to power source and turn saw ***ON***. When blade has reached full speed, perform a test cut with a scrap piece of wood.

   — If cut is satisfactory, repeat cut with workpiece.

Cutting Rabbets with a Standard Blade

A ripping blade is typically the best blade to use for cutting rabbets when using a standard blade because it removes sawdust very efficiently. (See **Page 25** for blade details.) Also, a sacrificial fence is not required when cutting rabbets with a standard blade.

To cut rabbets with a standard blade:

1. DISCONNECT MACHINE FROM POWER!

2. Ensure that riving knife and standard table insert are installed.

3. Mark width of rabbet cut on edge of workpiece, so you can clearly identify intended cut while it is laying flat on saw table.

4. Raise blade up to desired depth of cut (depth of rabbet channel desired).

5. Stand workpiece on edge, as shown in **Figure 52**, then adjust fence so blade is aligned with inside of your rabbet channel.

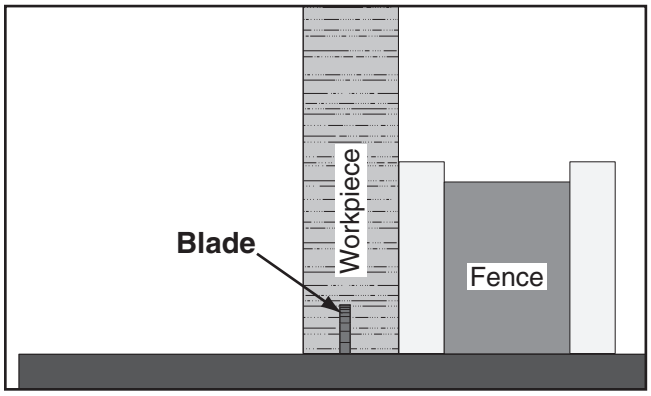

Figure 52. Example of rabbet cutting with a standard blade.

   — If workpiece is very tall, or is unstable when placed against fence, lay it flat on table and use a dado blade to perform rabbet cut.

⚠WARNING

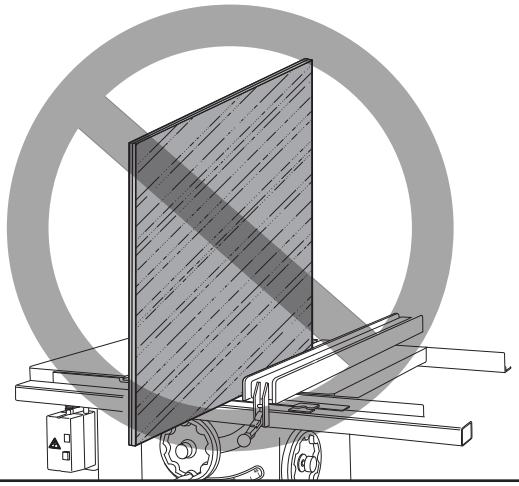

DO NOT place a tall board on edge to perform a rabbet cut with a standard blade. Workpieces that are too tall to properly support with fence can easily shift during operation and cause kickback. Instead, place stock flat on saw and perform rabbet cut with a dado blade, as instructed on Page 37.

6. Reconnect saw to power source, then perform cut.

7. Lay workpiece flat on table, as shown in **Figure 53**, adjust saw blade height to intersect with first cut, then perform second cut to complete rabbet.

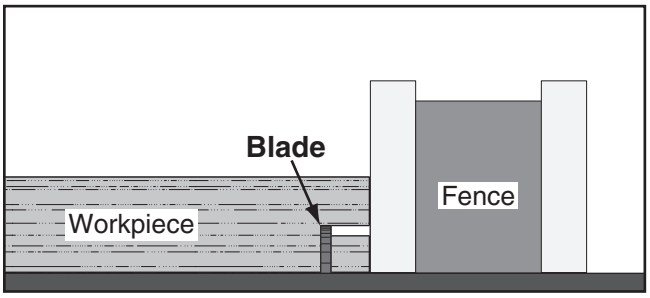

Figure 53. Example of second cut to create a rabbet.

SECTION 5: SHOP-MADE SAFETY ACCESSORIES

Featherboards

Easily made from scrap stock, featherboards provide an added degree of protection against kickback, especially when used together with push sticks. They also maintain pressure on the workpiece to keep it against the fence or table while cutting, which makes the operation easier and safer because the cut can be completed without the operator's hands getting near the blade. The angled ends and flexibility of the fingers allow the workpiece to move in only one direction.

Making a Featherboard

This sub-section covers the two basic types of featherboards: 1) Those secured by clamps, or 2) those secured with the miter slot.

Material Needed for Featherboard

Hardwood ¾" x 3" x 10" (Minimum)
Hardwood ¾" x 6" x 28" (Maximum) 1

Additional Material Needed for Mounting Featherboard in Miter Slot

Hardwood ⅜" x (Miter Slot Width) x 5"L 1
Wing Nut ¼"-20.....1
Flat Head Screw ¼"-20 x 2".....1
Flat Washer ¼"-20.....1

To make a featherboard:

1. Cut a hardwood board approximately ¾" thick to size. The length and width of the board can vary according to your design. Most featherboards are 10"–28" long and 3"–6" wide. Make sure the wood grain runs parallel with the length of the featherboard, so the fingers you will create in **Step 3** will bend without breaking.

2. Cut a 30° angle at one end of the board.

⚠CAUTION

We recommend using a bandsaw for making fingers in the next step because it tends to be safer. A table saw can be used, but it will over-cut the underside of the ends, produce a thicker kerf, and require you to stop the blade half-way through the cut, which can be dangerous.

3. Make a series of end cuts with the grain ⅜"–¼" apart and 2"–3" long, as shown in **Figure 54 (A)**. Alternatively, start cuts at 2"-3" deep, then make them progressively deeper, as shown in **Figure 54 (B)**.

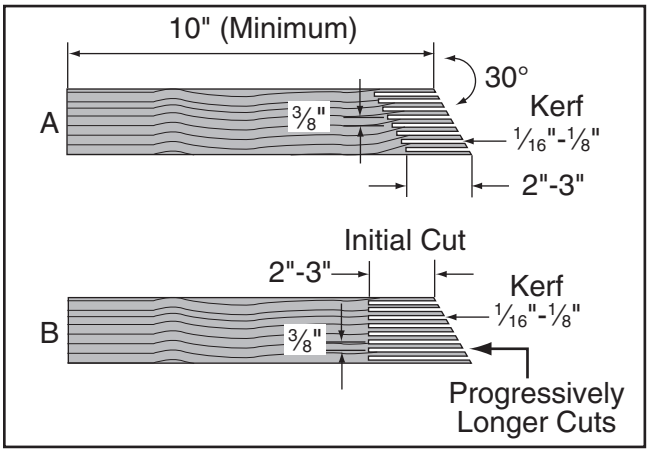

Figure 54. Patterns for featherboards (top view shown).

IMPORTANT: Cuts made across the grain result in weak fingers that easily break when flexed. When made correctly, the fingers should withstand flexing from moderate pressure. To test the finger flexibility, push firmly on the ends with your thumb. If the fingers do not flex, they are likely too thick (the cuts are too far apart).

NOTICE

Only Steps 1–3 are required to make a clamp-mounted featherboard. Refer to Page 41 for instructions on clamping.

4. Rout a ¼"–⅜" wide slot 4"–5" long in workpiece and 1"–2" from short end of featherboard (see **Figure 55**).

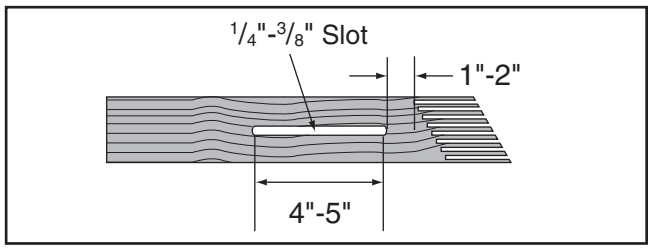

Figure 55. Slot routed in featherboard.

5. Cut a miter bar approximately 5" long that will fit in table miter slot, as shown in **Figure 56**.

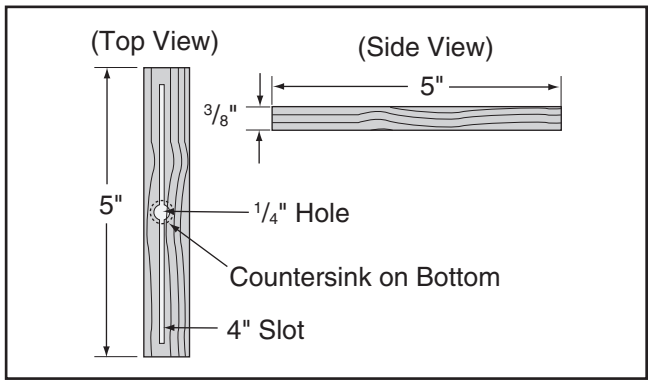

Figure 56. Miter bar pattern.

Tip: *Consider making miter bar longer for larger featherboards—approximately half the length of total featherboard—to support force applied to the featherboard during use.*

6. Drill a ¼" hole in center of bar, then countersink bottom to fit a ¼"-20 flat head screw.

7. Mark a 4" line through center of countersunk hole in center, then use a jig saw with a narrow blade to cut it out.

8. Assemble miter bar and featherboard with a ¼"-20 x 2" flat head screw, flat washer, and a wing nut or a star knob (see **Figure 57**). Congratulations! Your featherboard is complete.

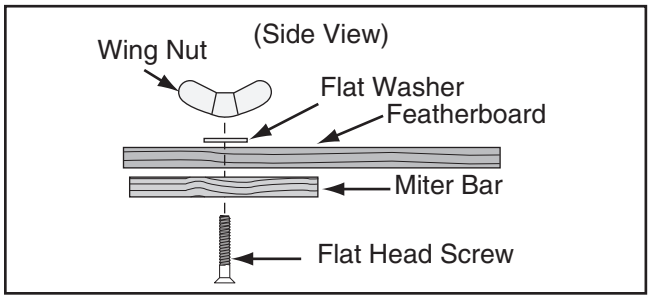

Figure 57. Assembling miter slot featherboard components.

Note: *The routed slot, countersink hole, and flat head screw are essential for miter bar to clamp into miter slot. When wing nut is tightened, it will draw flat head screw upward into countersunk hole. This will spread sides of miter bar and force them into walls of miter slot, locking featherboard in place.*

Tip: *The length of the flat head screw depends on thickness of featherboard—though 1½" to 2" lengths usually work.*

Now, proceed to **Mounting Featherboard in Miter Slot** on **Page 41**.

Mounting Featherboards w/Clamps

1. Lower saw blade, then adjust fence to desired width and secure it.

2. Place workpiece against fence, making sure it is 1" in front of the blade.

3. Place a featherboard on table away from blade so all fingers point forward and contact workpiece (see **Figure 58**).

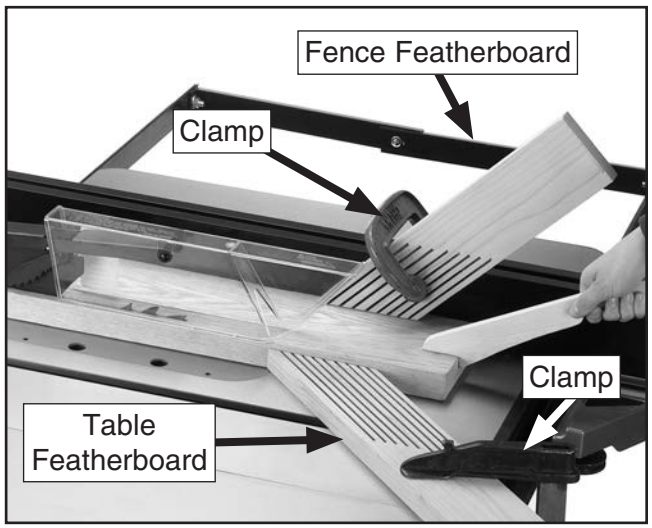

Figure 58. Example of featherboards secured with clamps.

4. Secure featherboard to table with a clamp.

5. Check featherboard by pushing it with your thumb to ensure it is secure.

   — If featherboard moves, tighten clamp more.

6. **Optional:** If cutting long workpieces, it may be beneficial to use a second featherboard attached to fence to keep board firmly against table while feeding.

Mounting Featherboard in Miter Slot

1. Lower saw blade, then adjust fence to desired width and secure it.

2. Place workpiece evenly against fence, making sure it is 1" in front of blade.

3. Slide featherboard miter bar into miter slot, making sure fingers slant toward blade, as shown in **Figure 59**.

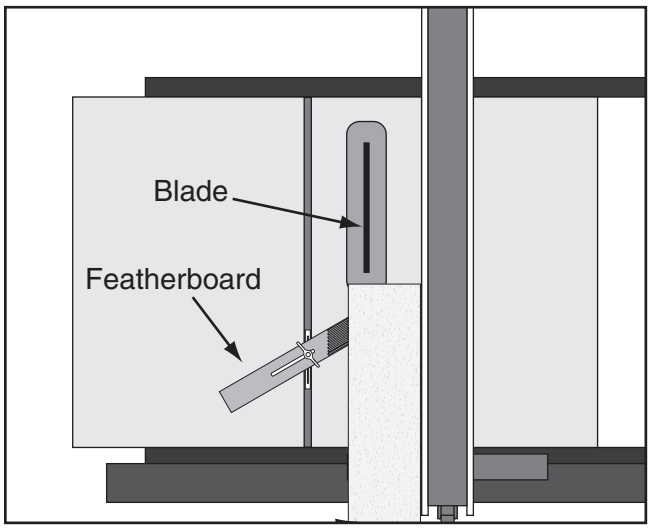

Figure 59. Featherboard installed in miter slot and supporting workpiece for ripping cut.

4. Position fingered edge of featherboard against edge of workpiece, so that all fingers contact workpiece. Slide featherboard toward blade until first finger is nearly even with end of workpiece, which should be 1" away from blade.

5. Double-check workpiece and featherboard to ensure they are properly positioned, as described in **Step 4**. Then secure featherboard to table. Check featherboard by hand to make sure it is tight.

   Note: *The featherboard should be placed firmly enough against workpiece to keep it against fence but not so tight that it is difficult to feed workpiece.*

Push Sticks

When used correctly, push sticks reduce the risk of injury by keeping hands away from the blade while cutting. In the event of an accident, a push stick can also absorb damage that would have otherwise happened to hands or fingers.

Using a Push Stick

Use push sticks whenever your hands will get within 12" of the blade. To maintain control when cutting large workpieces, start the cut by feeding with your hands then use push sticks to finish the cut, so your hands are not on the end of the workpiece as it passes through the blade.

Feeding: Place the notched end of the push stick against the end of the workpiece (see **Figure 61** below), and move the workpiece into the blade with steady downward and forward pressure.

Supporting: A second push stick can be used to keep the workpiece firmly against the fence while cutting. When using a push stick in this manner, only apply pressure before the blade; otherwise, pushing the workpiece against or behind the blade will increase the risk of kickback (see "Push Stick Prohibition Zone" in **Figure 60** below).

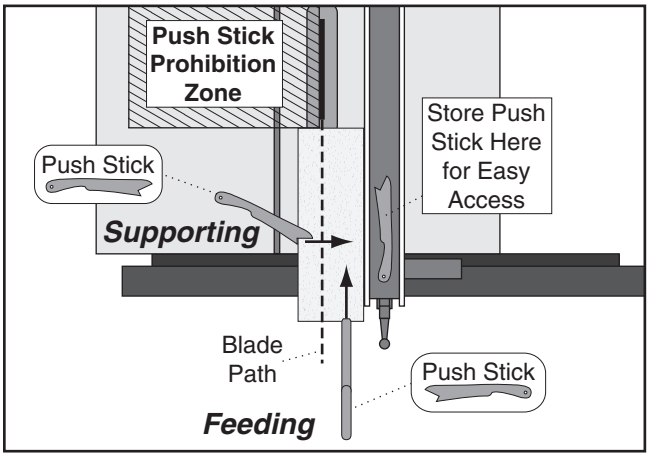

Figure 60. Using push sticks to rip narrow stock.

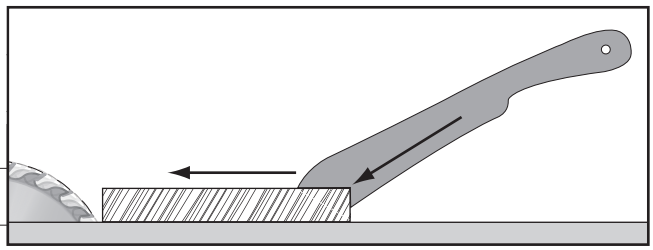

Figure 61. Side view of a push stick in-use.

Figure 62. Template for a basic shop-made push stick (not shown at actual size).

Push Blocks

When used correctly, a push block reduces the risk of injury by keeping hands away from the blade while cutting. In the event of an accident, a push block often takes the damage that would have otherwise happened to hands or fingers.

Using a Push Block

A push block can be used in place of or in addition to a push stick for feeding workpieces into the blade. Due to their design, push blocks allow the operator to apply firm downward pressure on the workpiece that could not otherwise be achieved with a push stick.

The push block design on this page can be used in two different ways (see **Figure 65**). Typically, the bottom of the push block is used until the end of the workpiece reaches the blade.

The notched end of the push block is then used to push the workpiece the rest of the way through the cut, keeping the operator's hands at a safe distance from the blade. A push stick is often used at the same time in the other hand to support the workpiece during the cut (see **Using a Push Stick** on **Page 42**).

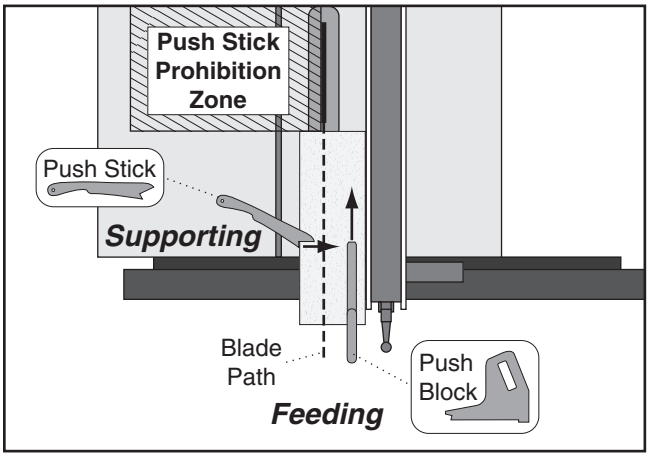

Figure 64. Using a push block and push stick to make a rip cut.

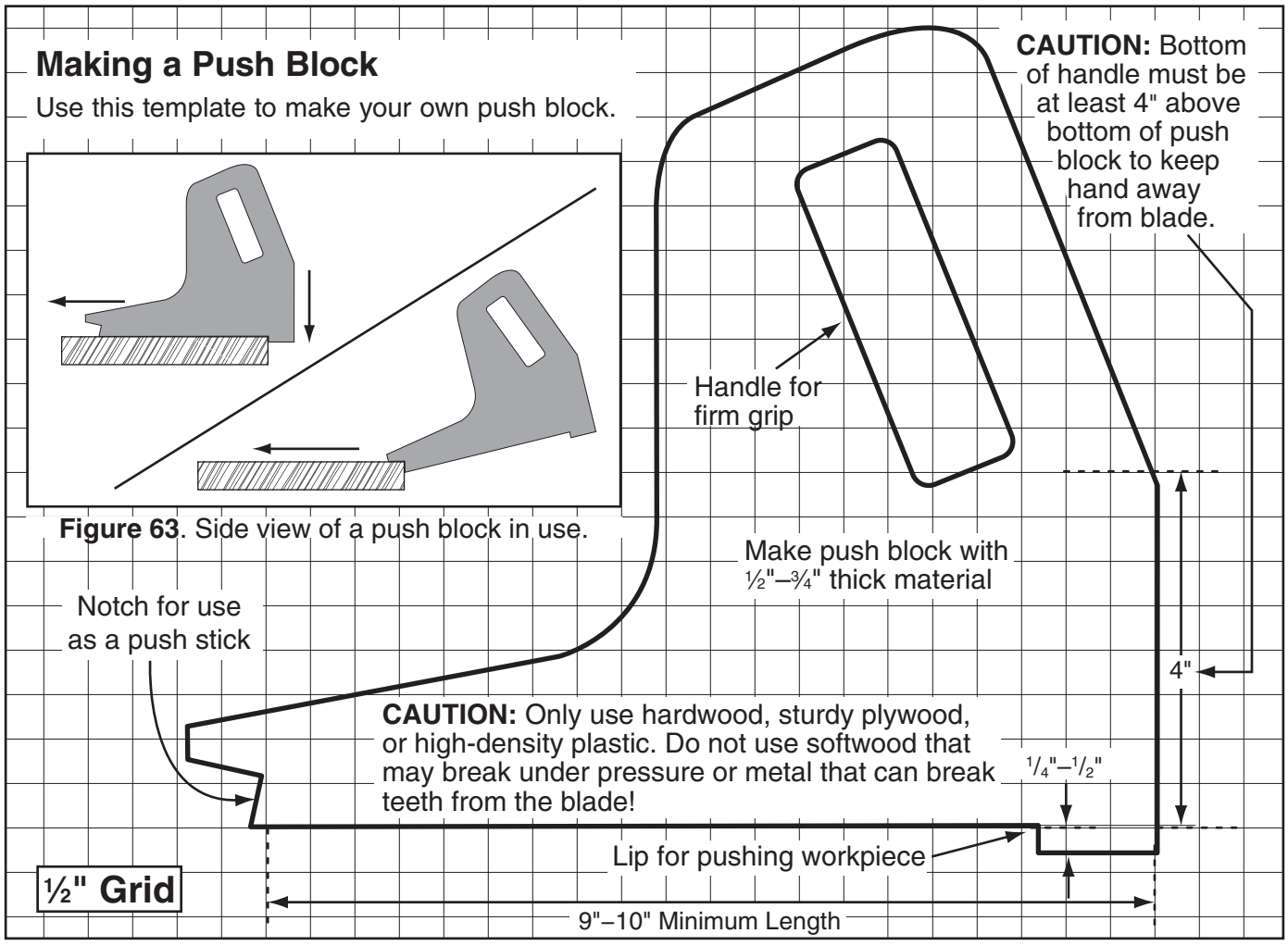

Figure 63. Side view of a push block in use.

Figure 65. Template for a shop-made push block (shown at 50% of full size).

SECTION 6: GRIZZLY AFTERMARKET ACCESSORIES

⚠WARNING

Installing unapproved accessories may cause machine to malfunction, resulting in serious personal injury or machine damage. To reduce this risk, only install accessories recommended for this machine by Grizzly.

NOTICE

Refer to our website or latest catalog for additional recommended accessories.

For G0869:

G0871—Roller Stand

This stand is the perfect complement to the G0869 Portable Table Saw. It quickly and easily folds up, allowing access to the built-in rollers, and features an integrated handle for easy mobility around the jobsite. 24" x 37" footprint.



Figure 66. G0871 Roller Stand for G0869.

D3122—Push Stick

This essential safety item keeps hands a safe distance from the blade while maintaining control of the workpiece against the table and fence. An absolute necessity when running narrow stock. Durable handle is designed for maximum control. Measures 13½" overall.

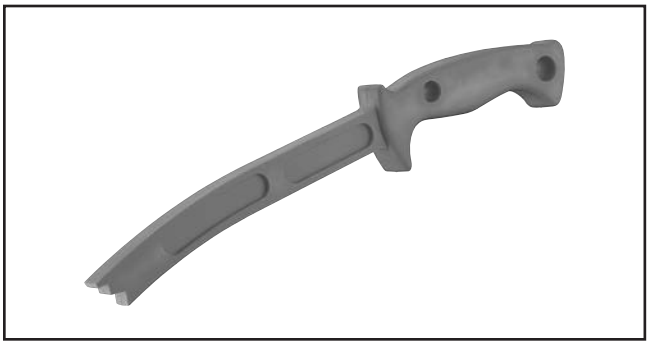

Figure 67. D3122 Push Stick.

T30542—Dado Insert for G0869/G0870

Dado Insert engineered for G0869 and G0870 portable table saws. Pre-cut throat—ready to use. Features twist lock for tool-free operation and positioning set screws to ensure a solid and precise fit in the table.

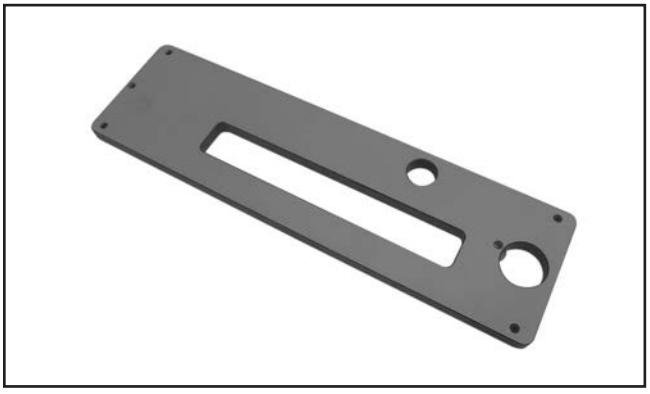

Figure 68. T30542 Dado Insert for G0869/ G0870.

Forrest Woodworker II Saw Blades
T20778—10", 20 Teeth
T20779—10", 40 Teeth
T23527—10", 48 Teeth
Hailed as the Cadillac of all blades, Forrest saw blades have become legendary for their ability to leave highly polished, finish-ready surfaces on nearly everything they cut. Made in USA. With this all-purpose blade for table saws you can rip and crosscut rockhards and softwoods, resulting in a smooth as sanded surface. With 20° face hook, ply veneers will crosscut with no bottom splinter at moderate feed rates. Double hard and 40% stronger C4 carbide will give up to 300% longer life between sharpenings. Ends blade changing (one blade does rip, combo and crosscut), second-step finishing and cutting 1/16" oversize to allow for resurfacing. Buy and sharpen one blade instead of 3 (24T rip, 50T combination and 80T crosscut). 5/8" arbor, 1/8" kerf.



Figure 69. Forrest Woodworker II Saw Blade.

W1400—Push Block
Made of high-impact molded plastic, these safety push blocks have a layer of friction rubber on the bottom that grabs your workpiece as you press down. We strongly recommend these for use with jointers, router tables, shapers and table saws. Measures 3" x 6".



Figure 70. W1400 Push Block.

G2795—10" x 24T Stack Dado Set
These are some of the finest precision dado heads available. Put them to work on wood, prefinished materials, Formica® and other related products. Fits standard 5/8" arbors and width can be varied from 1/8" to 13/16". Set includes (2) 24-tooth blades, (5) chippers, (12) shims: (4) .010" and (8) .020", and blade carrier.

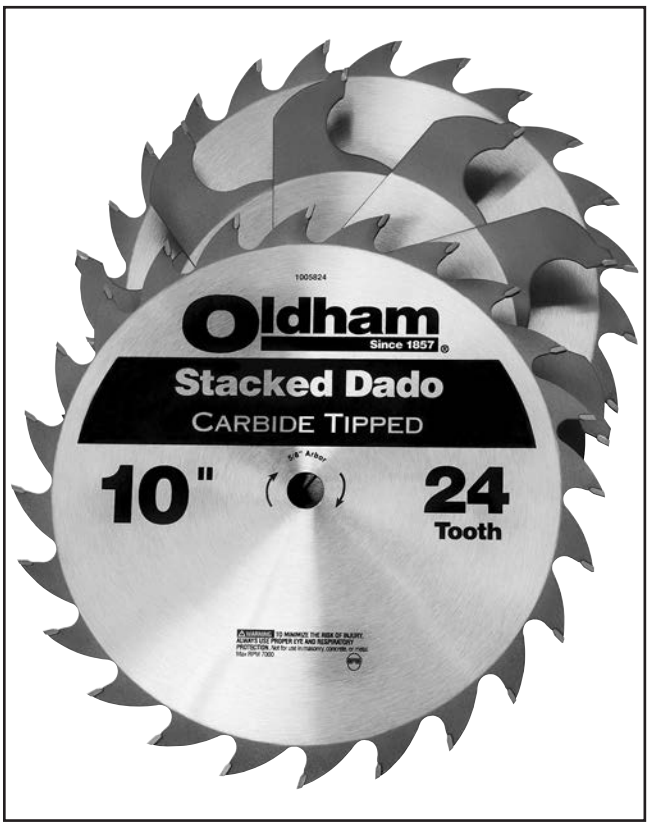

Figure 71. G2795 10" x 24T Stack Dado Set.

D3096—Featherboard
Reduce the risk of kickback without the use of clamps. These featherboards are designed to lock into 3/8" and 3/4" miter gauge slots and are adjustable for various stock widths.

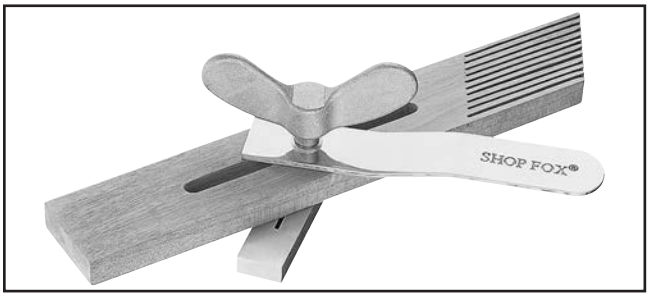

Figure 72. D3096 Featherboard.

SECTION 7: MAINTENANCE

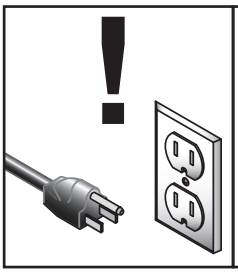

⚠WARNING
To reduce risk of shock or accidental startup, always disconnect machine from power before adjustments, maintenance, or service.

Schedule

For optimum performance from this machine, this maintenance schedule must be strictly followed.

Ongoing
To maintain a low risk of injury and proper machine operation, if you ever observe any of the items below, shut down the machine immediately and fix the problem before continuing operations:

- Loose mounting bolts/arbor nut.
- Damaged saw blade.
- Worn or damaged wires.
- Any other unsafe condition.

Weekly Maintenance
- Clean table surface and miter slot grooves.
- Clean and protect cast-iron table.
- Clean rip fence.

Monthly Check
- Clean/vacuum dust buildup from inside cabinet and off motor.

Every 6–12 Months
- Lubricate trunnion slides (**Page 47**).
- Lubricate blade height and fence rack & pinion (**Page 47**).

Cleaning & Protecting

Cleaning the Model G0869/G0870 is relatively easy. Vacuum excess wood chips and sawdust, and wipe off the remaining dust with a dry cloth. If any resin has built up, use a resin-dissolving cleaner to remove it.

Lubrication

It is essential to clean components before lubricating them because dust and chips build up on lubricated components and make them hard to move. Simply adding more grease to them will not yield smooth-moving components.

Clean the components in this section with an oil/grease solvent cleaner and shop rags.

If you thoroughly clean the components in this section before lubricating them, the result will be silky smooth movement when turning the handwheels, which will result in much higher enjoyment on your part!

The following are the main components that need to be lubricated:

- Trunnion Slides
- Blade Height Rack & Pinion
- Front and Rear Fence Rack & Pinion

Trunnion Slides

Lubrication Type ... T26419 or NLGI#2 Equivalent
Amount .....1-2 Dabs
Lubrication Frequency .....6–12 Months

Clean out the front and rear trunnion slides with mineral spirits and a rag, then apply grease into each groove. Move the blade tilt back and forth to spread the grease (see **Figures 73**–**75**).

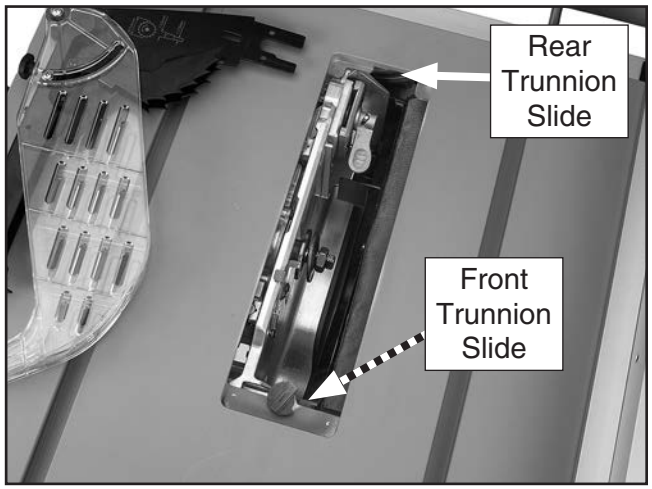

Figure 73. Location of trunnion slides.

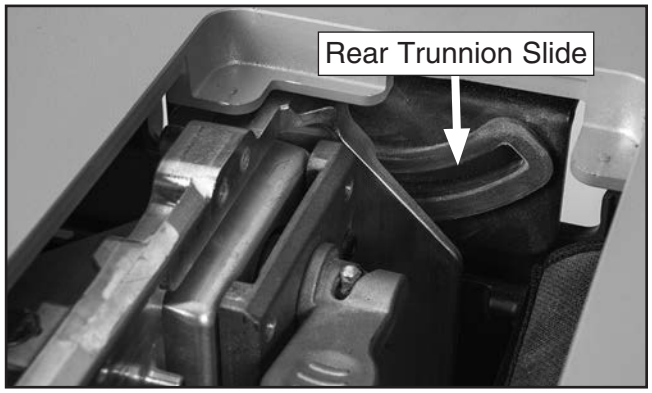

Figure 74. Close-up of rear trunnion slide.

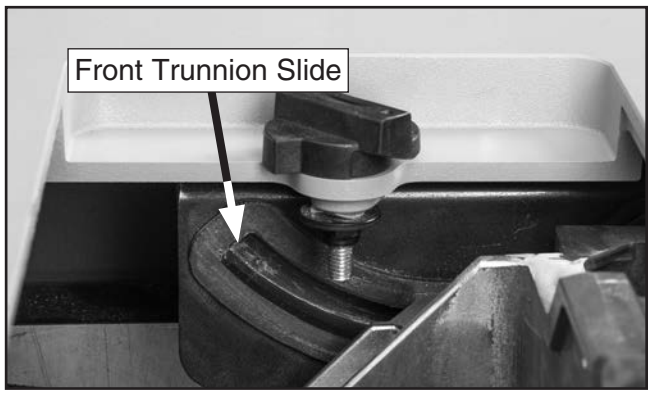

Figure 75. Close-up of front trunnion slide.

Blade Height and Fence Rack & Pinion Assemblies

Lubrication Type ... T26419 or NLGI#2 Equivalent
Amount .....Dab
Lubrication Frequency .....6–12 Months

Clean away any built-up grime and debris from the rack & pinion assemblies (see **Figures 76**–**78**) with a wire brush, rags, and mineral spirits. Allow the components to dry, then apply a thin coat of grease to them. Move components through range of motion to spread grease.

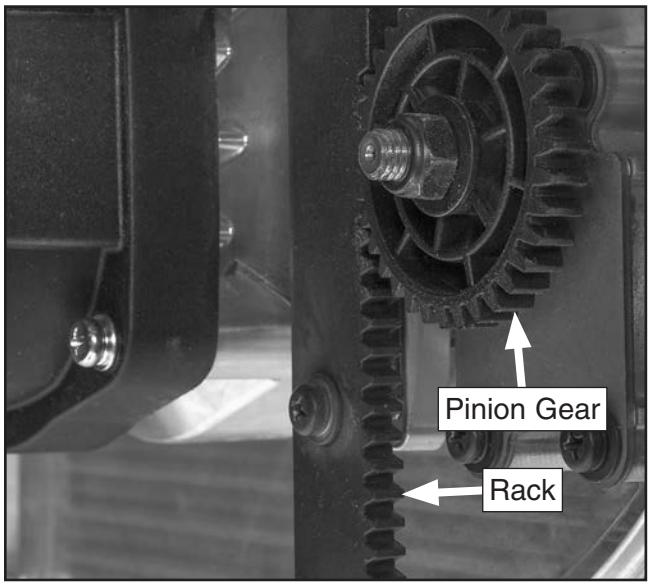

Figure 76. Location of blade height rack & pinion assembly.

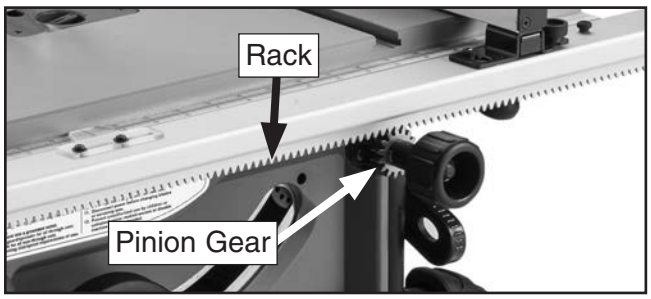

Figure 77. Front fence rack & pinion.

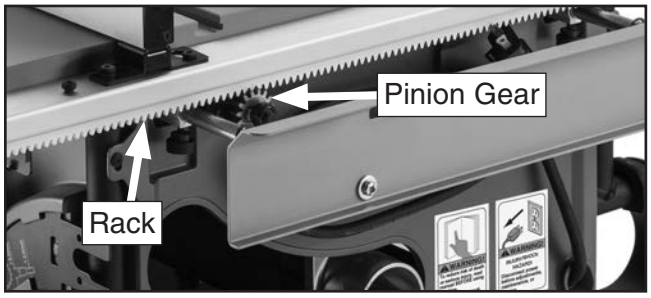

Figure 78. Rear fence rack & pinion.

SECTION 8: SERVICE

Review the troubleshooting procedures in this section if a problem develops with your machine. If you need replacement parts or additional help with a procedure, call our Technical Support. **Note:** *Please gather the serial number and manufacture date of your machine before calling.*

Troubleshooting

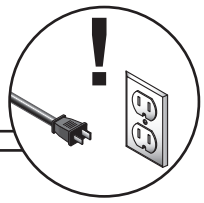

Motor & Electrical

Symptom	Possible Cause	Possible Solution
Machine does not start, or power supply breaker immediately trips after startup.	1. Power supply circuit breaker tripped or fuse blown. 2. Plug/receptacle at fault/wired incorrectly. 3. ON/OFF switch at fault. 4. Motor at fault.	1. Ensure circuit is sized correctly and free of shorts. Reset circuit breaker or replace fuse. 2. Test for good contacts; correct the wiring. 3. Test/replace switch. 4. Test/repair/replace.
Machine stalls or is underpowered.	1. Feed rate/cutting speed too fast. 2. Workpiece material unsuitable for machine. 3. Motor overheated. 4. Blade dull or incorrect for type of cut. 5. Motor brushes worn/at fault. 6. Motor at fault.	1. Decrease feed rate/cutting speed. 2. Only cut wood/ensure moisture is below 20%. 3. Clean motor/let cool, and reduce workload. 4. Use correct, sharp blade; reduce feed rate. 5. Inspect/replace motor brushes (**Page 56**). 6. Test/replace.
Machine has vibration or noisy operation.	1. Motor or component loose. 2. Blade at fault. 3. Machine incorrectly mounted/resting on floor/benchtop. 4. Arbor bearings at fault.	1. Inspect/replace damaged bolts/nuts, and re-tighten with thread-locking fluid. 2. Replace warped/bent blade; resharpen dull blade. 3. Tighten mounting bolts; relocate/shim machine. 4. Replace arbor housing bearings; replace arbor.

Machine Operation

Symptom	Possible Cause	Possible Solution
Rip fence does not move smoothly.	1. Fence lock lever engaged/partially engaged. 2. Rip fence front/rear rack & pinion dirty or sticky. 3. Rails dirty or sticky.	1. Disengage fence lock lever (**Page 5**). 2. Clean rip fence front/rear rack & pinion. 3. Clean and wax rails.
Material moves away from fence when ripping.	1. Improper feeding technique.	1. Learn/use proper feeding technique.
Blade not aligned with miter slot.	1. Blade warped/damaged/dull. 2. Miter slot not parallel with blade.	1. Replace blade (**Page 27**). 2. Adjust miter slot parallel with blade (**Page 52**).
Blade tilt does not stop at 45°/90°.	1. 45°/90° blade tilt stop out of adjustment. Sawdust built up in/on trunnions.	1. Adjust 45°/90° stop (**Page 50**). Remove sawdust from trunnions. Clean and re-lubricate as necessary.
Blade hits table insert when tilting to 45°.	1. Sawdust/debris stuck in trunnion slides. 2. Blade incorrectly installed. 3. Miter slot not parallel with blade.	1. Clean sawdust or debris out of trunnion slides. 2. Correctly install blade (**Page 27**). 3. Adjust miter slot parallel with blade (**Page 52**).
Board binds or burns when feeding through table saw.	1. Blade warped/damaged/dull. 2. Too many teeth on blade for cutting type. 3. Riving knife or spreader not correctly aligned with blade. 4. Miter slot not parallel with blade.	1. Replace blade (**Page 27**). 2. Change blade to one with fewer teeth. 3. Adjust riving knife or spreader into alignment with blade (**Page 53**). 4. Adjust miter slot parallel with blade (**Page 52**).
Blade too close to insert.	1. Blade or arbor washers incorrectly installed on arbor.	1. Verify blade and arbor washers are correctly installed in the required positions.
Blade will not move up or down.	1. Set screw on pinion gear is loose or missing.	1. Tighten or replace set screw.
Too much sawdust blown back toward operator.	1. Blade guard removed. 2. Too many air leaks in cabinet for proper dust collection. 3. Dust collection system clogged or lacks required CFM at machine.	1. Re-install blade guard for maximum safety and dust control (**Page 28**). 2. Seal leaks in cabinet or around blade guard dust port. 3. Remove clog; revise ducting layout for improved suction; use a different dust collector.
Workpiece catches on table/dado insert or table throat during cutting operation.	1. Table/dado insert out of adjustment.	1. Adjust table/dado insert so it is perfectly flush with table surface (**Page 55**).

Blade Tilt Stops

The table saw features stop cams that stop the blade exactly at 45° and 90° when tilting it. The stops have been set at the factory and should require no adjustments, unless you notice that your cuts are not accurate.

Note: *The tilt scale reads "0" when the blade is 90° to the table.*

Tools Needed	**Qty**
90° Square	1
45° Square	1
Phillips Head Screwdriver #2	1

Setting 90° Stop Cam

1. DISCONNECT MACHINE FROM POWER!

2. Raise blade as high as it will go, then tilt it toward 0° until it stops and cannot be tilted any more.

3. Place 90° square against table and blade so it contacts blade evenly from bottom to top, as shown in **Figure 79**. Make sure blade tooth does not obstruct placement of square.

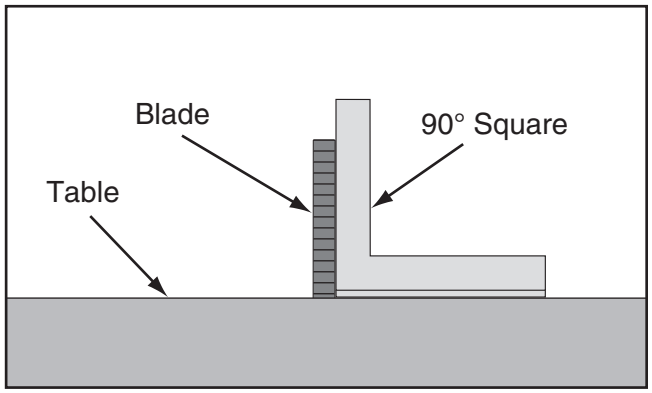

Figure 79. Checking blade at 90°.

— If blade *is* 90° to table, then no adjustment to stop cam is necessary. Make sure tilt scale pointer shown in **Figure 80** points to 0° mark on scale. If necessary, adjust position by loosening adjustment screw, moving pointer with your fingers, then tightening screw.

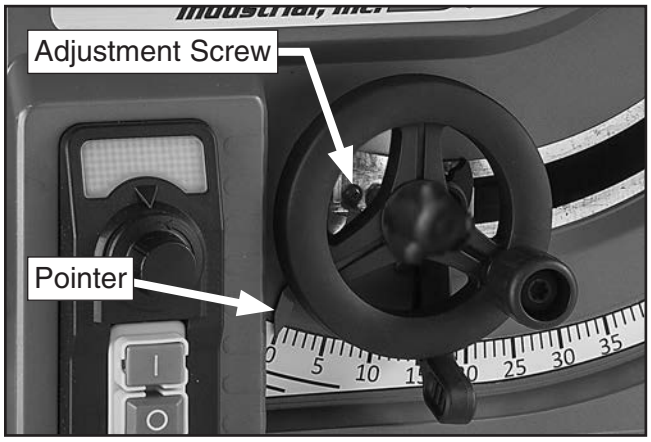

Figure 80. Location of tilt scale pointer and adjustment screw.

— If blade is *not* 90° to table, you will need to adjust 90° stop cam. Proceed to **Step 4**.

4. Tilt blade to approximately 25°, so there is room to adjust 90° stop cam (see **Figure 81**).

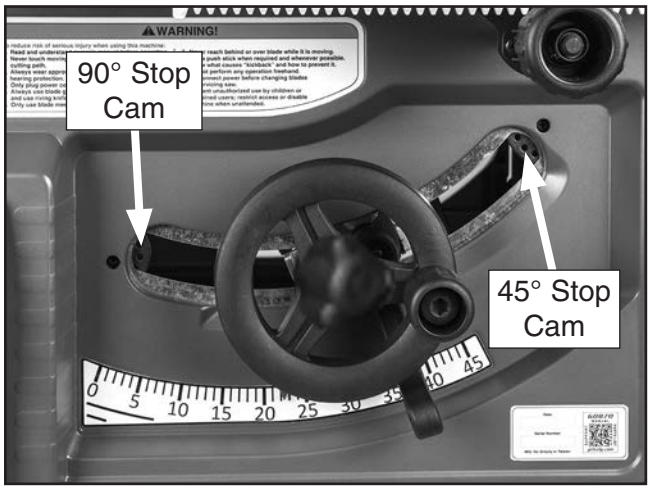

Figure 81. Location of 90° stop cam.

5. Loosen stop cam adjustment screw (see **Figure 82**) just enough so cam can be rotated without it slipping out of position.

6. Insert tip of Phillips head screwdriver into a cam adjustment hole (see **Figure 82**) and move cam slightly up or down as necessary to adjust where blade tilt will stop.

   — Rotate cam adjustment hole *up* to move stop farther to *left*.

   — Rotate cam adjustment hole *down* to move stop farther to *right*.

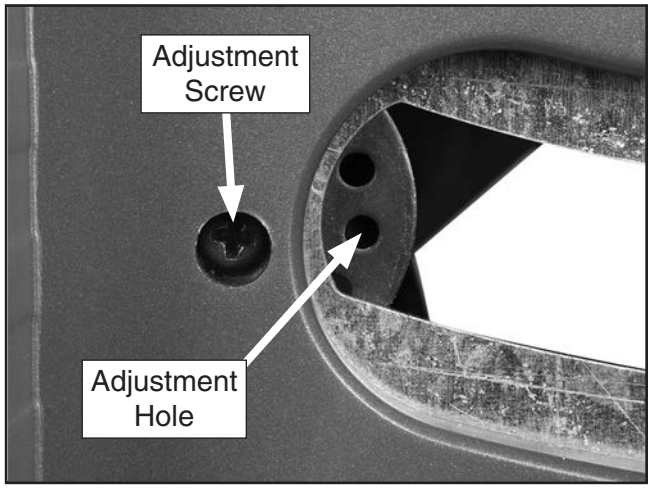

Figure 82. Location of 90° cam adjustment screw and adjustment holes.

7. Tighten stop cam adjustment screw to secure adjustment.

8. Tilt blade toward 90° until handwheel contacts stop cam, lock blade tilt setting, then recheck to see if blade is square to table (see **Step 3** on **Page 50**).

9. If necessary, repeat **Steps 4–8** until blade is perfectly square to table when handwheel is contacting 90° stop cam.

Setting 45° Stop Cam

1. DISCONNECT MACHINE FROM POWER!

2. Raise blade as high as it will go, then tilt it towards 45° until it stops and cannot be tilted any more.

3. Place a 45° square against table and blade so it contacts blade evenly from bottom to top, as shown in **Figure 83**. Make sure a blade tooth does not obstruct placement of square.

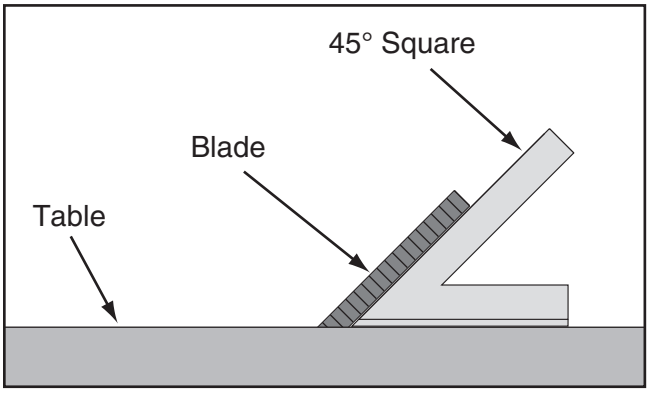

Figure 83. Checking blade at 45°.

   — If blade *is* 45° to table, then no adjustment to stop cam is necessary. Make sure tilt scale pointer shown in **Figure 80** on **Page 50** points to 45° mark on scale. If necessary, adjust position by loosening adjustment screw, moving pointer with your fingers, then tightening screw.

   — If blade is *not* 45° to table, adjust 45° stop cam in similar manner as adjusting 90° stop cam (see **Steps 4–9** of **Setting 90° Stop Cam**, starting on **Page 50**).

Miter Slot to Blade Parallelism

The table saw will provide best results if the miter slot is adjusted parallel to the blade. If it is not exactly parallel, your cuts and your finished work will be lower in quality, but more importantly, the risk of kickback will be increased. Take the time to adjust your table saw properly. A few minutes now will be time well spent.

Tools Needed	Qty
Adjustable Square	1
Marker	1
Hex Wrench 5mm	1

To adjust the blade parallel to the miter slot:

1. DISCONNECT SAW FROM POWER!

2. Use an adjustable square to measure the distance from the miter slot to a carbide tip on the blade, as shown in **Figure 84.** Make sure that the face of the adjustable square is even along the miter slot.

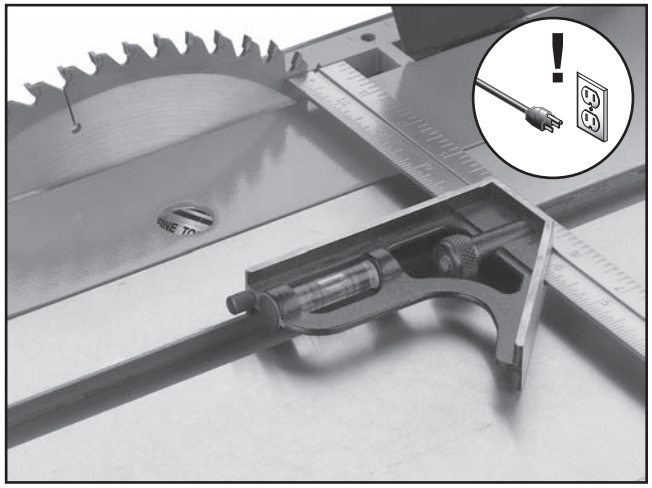

Figure 84. Example of adjusting blade to miter slot.

3. With the end of the adjustable square just touching the tip, lock the square in place. Now, mark the carbide tip with a marker where you made this measurement.

⚠CAUTION

The saw blade is sharp. Use extra care or wear gloves when handling the blade or working near it.

4. Rotate the marked blade tip to the other end of the table insert.

5. Slide the adjustable square down to the other end of the table insert, and compare the distance from the marked blade tip to the end of the adjustable square.

   —If the blade tip measurement *is* the same on both sides, the miter slot is parallel with the table; the procedure is complete.

   — If the blade tip measurement *is not* the same on both sides, the table will need to be adjusted. Proceed to **Step 6**.

6. To adjust the table, slightly loosen the cap screws in the trunnion mounting locations (see **Figure 85**) and slightly tap the trunnions in the needed direction. Repeat **Steps 2–5** until the blade and miter slot are parallel.

7. Tighten the trunnion mounting cap screws.

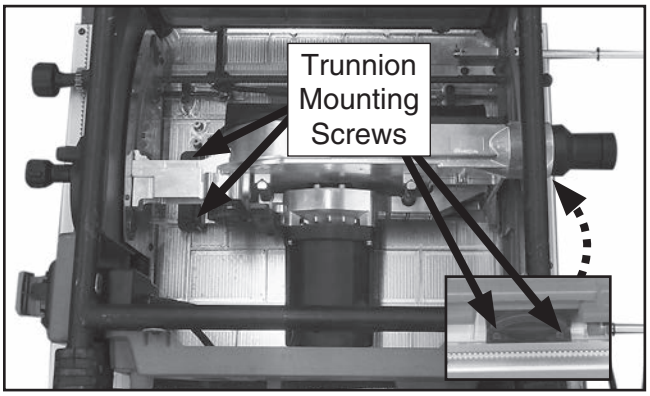

Figure 85. Trunnion mounting screws.

Spreader or Riving Knife Alignment

Checking Alignment

The blade guard spreader and riving knife must be aligned with the blade when installed. If the spreader or riving knife is not aligned with the blade, then the workpiece will before forced sideways during the cut, which will increase the risk of kickback.

Items Needed	Qty
Straightedge	1

To check spreader/riving knife alignment:

1. DISCONNECT MACHINE FROM POWER!

2. Raise saw blade to maximum height so you have easy working access.

3. Place straightedge against side of blade and spreader/riving knife at top and bottom, as shown in **Figure 86**. Spreader/riving knife should be parallel with blade along its length at both positions, and in "Alignment Zone," as shown in **Figure 87**.

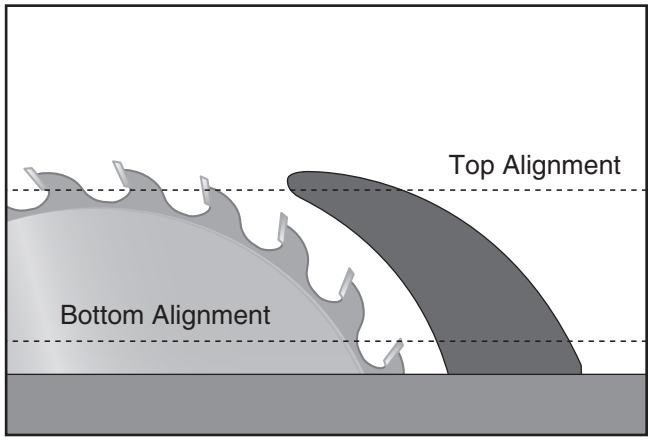

Figure 86. Checking top and bottom riving knife parallelism with blade.

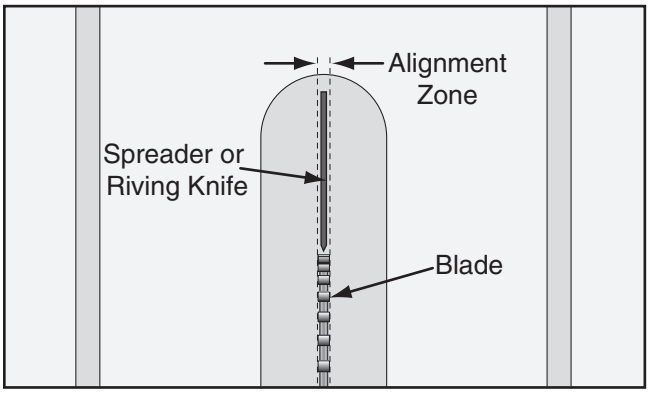

Figure 87. Spreader/riving knife alignment zone.

— If spreader/riving knife is not parallel with blade and inside alignment zone, then it needs to be adjusted. Proceed to **Adjusting Alignment** instructions.

— If spreader/riving knife is not parallel with the blade at either the top or bottom, it may be bent.

4. Remove spreader/riving knife and place it on flat surface and check to see if spreader/riving knife lays evenly along its length.

— If spreader/riving knife does not lay evenly, proceed to **Adjusting Bent Spreader/Riving Knife** on **Page 54**.

Adjusting Alignment

The spreader/riving knife mounting position can be adjusted into alignment with the blade using the set screws on the spreader/riving knife mounting block.

Items Needed	Qty
Hex Wrench 3mm	1

To adjust spreader/riving knife position:

1. DISCONNECT MACHINE FROM POWER!

2. Remove table insert.

3. Loosen (2) cap screws on mounting block, then adjust either top or bottom control set screws or side control set screws (see **Figure 88**) to move it the needed direction.

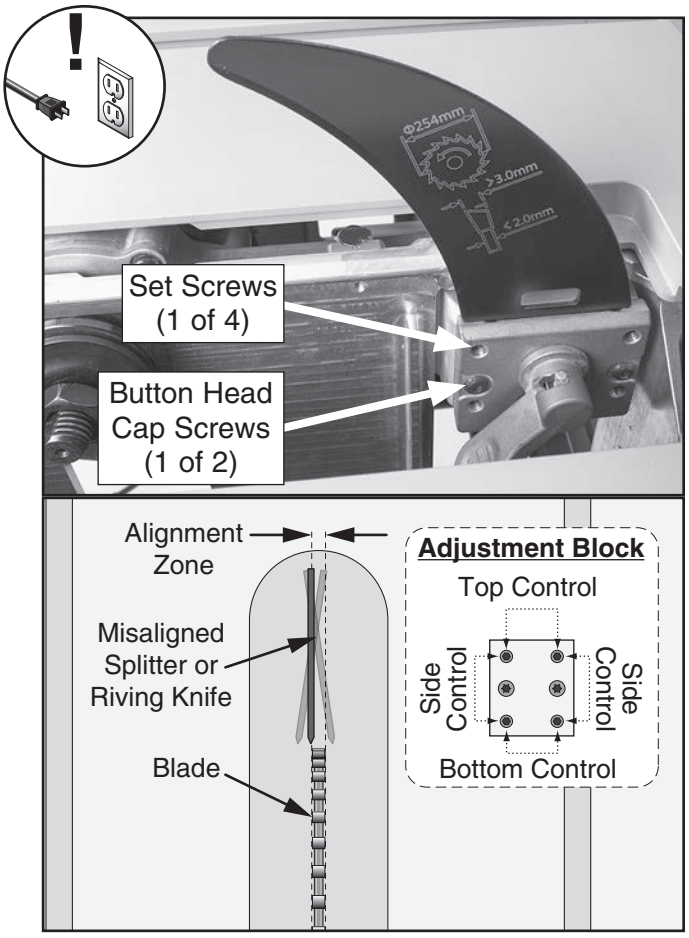

Figure 88. Set screws for adjusting spreader/riving knife position.

Top and Bottom Control: To move the top of the spreader/riving knife right or left (and the bottom of the spreader/riving knife in the opposite direction), adjust the top and bottom pair of set screws on the mounting block an equal amount in the opposite direction.

Side Control: To move the front of the spreader/riving knife left or right (and the rear of the spreader/riving knife in the opposite direction), adjust each pair of side control set screws an equal amount in the opposite direction.

4. Re-install table insert.

5. Follow **Checking Alignment**, **Steps 1–3**.

   — If spreader/riving knife *is* in alignment zone, no additional steps are necessary.

   — If spreader/riving knife is still *not* in alignment zone, continue adjusting set screws on mounting block as necessary to correctly position spreader/riving knife.

6. Tighten (2) cap screws on mounting block to secure spreader/riving knife adjustment.

Adjusting Bent Spreader/Riving Knife

1. DISCONNECT MACHINE FROM POWER!

2. Bend spreader or riving knife by hand while installed, then follow **Steps 1–3** in **Checking Alignment** on **Page 53** to determine if it is parallel with blade and inside "Alignment Zone" (refer to **Figure 87** in **Checking Alignment** on **Page 53**).

   — If this doesn't work, remove it to straighten.

   — If you cannot straighten it properly, replace it.

Fence Scale Calibration

The fence scale indicator window, shown in **Figure 89**, can be calibrated with the fence scale if you notice that your cuts do not accurately match what is shown on the fence scale.

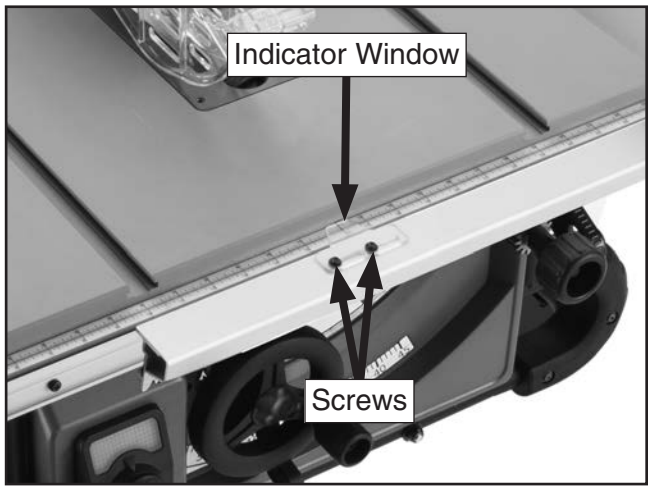

Figure 89. Fence indicator window.

The indicator adjusts by loosening the two mounting screws and sliding it in the desired direction.

Items Needed	Qty
Phillips Head Screwdriver #2	1
Scrap Piece of Wood	1
Tape Measure	1

To calibrate fence scale indicator windows:

1. Position and lock fence at 13", as indicated by scale, then cut your scrap piece of wood.

2. Reposition and lock fence at 12", as indicated by scale.

3. Flip your scrap piece of wood over, placing side that was cut in **Step 2** against fence, and cut your scrap piece of wood.

4. Measure width of freshly cut workpiece with tape measure. Workpiece width should be exactly 12". If it is not, then adjust indicator window to match the width of workpiece.

Table/Dado Insert Adjustment

The table/dado insert must sit perfectly flush with the table to provide a smooth, continuous surface for the workpiece to slide over. The insert is held in place by a magnet and sits on top of four adjustment screws (see **Figure 90**).

The insert should be checked and adjusted any time it is removed and replaced, after prolonged use, or any time you notice the workpiece or fence does not slide smoothly over the insert.

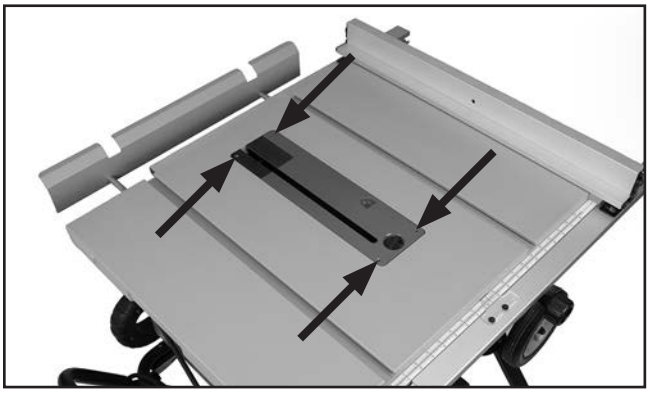

Figure 90. Location of table/dado insert holes with adjustment screws.

Tools Needed	Qty
Hex Wrench 2.5mm	1
Straightedge	1

To check and adjust insert:

1. DISCONNECT MACHINE FROM POWER!

2. Place straightedge across insert and check to make sure insert is flush with table at front and back of throat.

   — If insert is flush with table, no adjustments are necessary.

   — If insert is not flush with table, proceed to **Step 3**.

3. Insert hex wrench through holes shown in **Figure 90** and either loosen screws to raise insert, or tighten screws to lower it. Repeat **Steps 2–3** until insert is perfectly flush with surface of table.

Brush Replacement

This table saw is equipped with a universal motor that uses two carbon brushes to transmit electrical current inside the motor. These brushes are considered to be regular "wear items" or "consumables" that will need to be replaced during the life of the motor. The frequency of required replacement is often related to how much the motor is used and how hard it is pushed.

Replace the carbon brushes (part number: P0869133-14 for G0869, or P0870133-14 for G0870) at the same time when the motor no longer reaches full power, or when the brushes measure less than ¼" long (new brushes are ⅝" long).

Tools Needed:	**Qty**
Standard Screwdriver #2	1

To inspect and replace motor brushes:

1. DISCONNECT MACHINE FROM POWER!

2. Remove brush caps and worn brushes (see **Figure 91**) from motor.

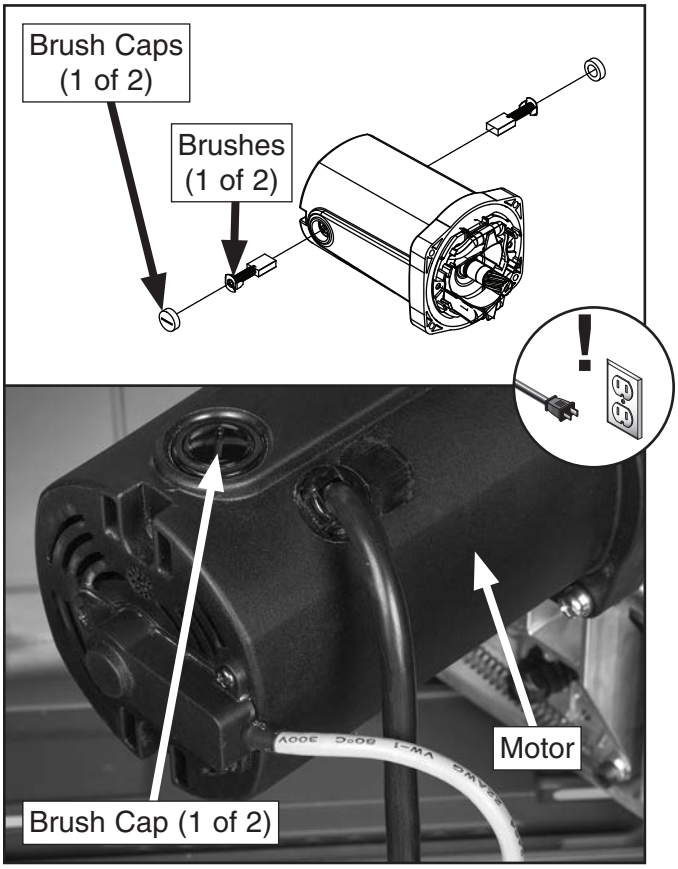

Figure 91. Location of motor brushes and brush caps.

3. Replace both motor brushes and install brush caps.

SECTION 9: WIRING

These pages are current at the time of printing. However, in the spirit of improvement, we may make changes to the electrical systems of future machines. Compare the manufacture date of your machine to the one stated in this manual, and study this section carefully.

If there are differences between your machine and what is shown in this section, call Technical Support at (570) 546-9663 for assistance BEFORE making any changes to the wiring on your machine. An updated wiring diagram may be available. **Note:** *Please gather the serial number and manufacture date of your machine before calling. This information can be found on the main machine label.*

⚠WARNING
Wiring Safety Instructions

SHOCK HAZARD. Working on wiring that is connected to a power source is extremely dangerous. Touching electrified parts will result in personal injury including but not limited to severe burns, electrocution, or death. Disconnect the power from the machine before servicing electrical components!

MODIFICATIONS. Modifying the wiring beyond what is shown in the diagram may lead to unpredictable results, including serious injury or fire. This includes the installation of unapproved aftermarket parts.

WIRE CONNECTIONS. All connections must be tight to prevent wires from loosening during machine operation. Double-check all wires disconnected or connected during any wiring task to ensure tight connections.

CIRCUIT REQUIREMENTS. You MUST follow the requirements at the beginning of this manual when connecting your machine to a power source.

WIRE/COMPONENT DAMAGE. Damaged wires or components increase the risk of serious personal injury, fire, or machine damage. If you notice that any wires or components are damaged while performing a wiring task, replace those wires or components.

MOTOR WIRING. The motor wiring shown in these diagrams is current at the time of printing but may not match your machine. If you find this to be the case, use the wiring diagram inside the motor junction box.

CAPACITORS/INVERTERS. Some capacitors and power inverters store an electrical charge for up to 10 minutes after being disconnected from the power source. To reduce the risk of being shocked, wait at least this long before working on capacitors.

EXPERIENCING DIFFICULTIES. If you are experiencing difficulties understanding the information included in this section, contact our Technical Support at (570) 546-9663.

NOTICE

The photos and diagrams included in this section are best viewed in color. You can view these pages in color at www.grizzly.com.

COLOR KEY

BLACK	Bk	BLUE	Bl	YELLOW	Yl	LIGHT BLUE	Lb
WHITE	Wt	BROWN	Br	YELLOW GREEN	Yg	BLUE WHITE	Bw
GREEN	Gn	GRAY	Gy	PURPLE	Pu	TURQUOISE	Tu
RED	Rd	ORANGE	Or	PINK	Pk		

Wiring Diagram

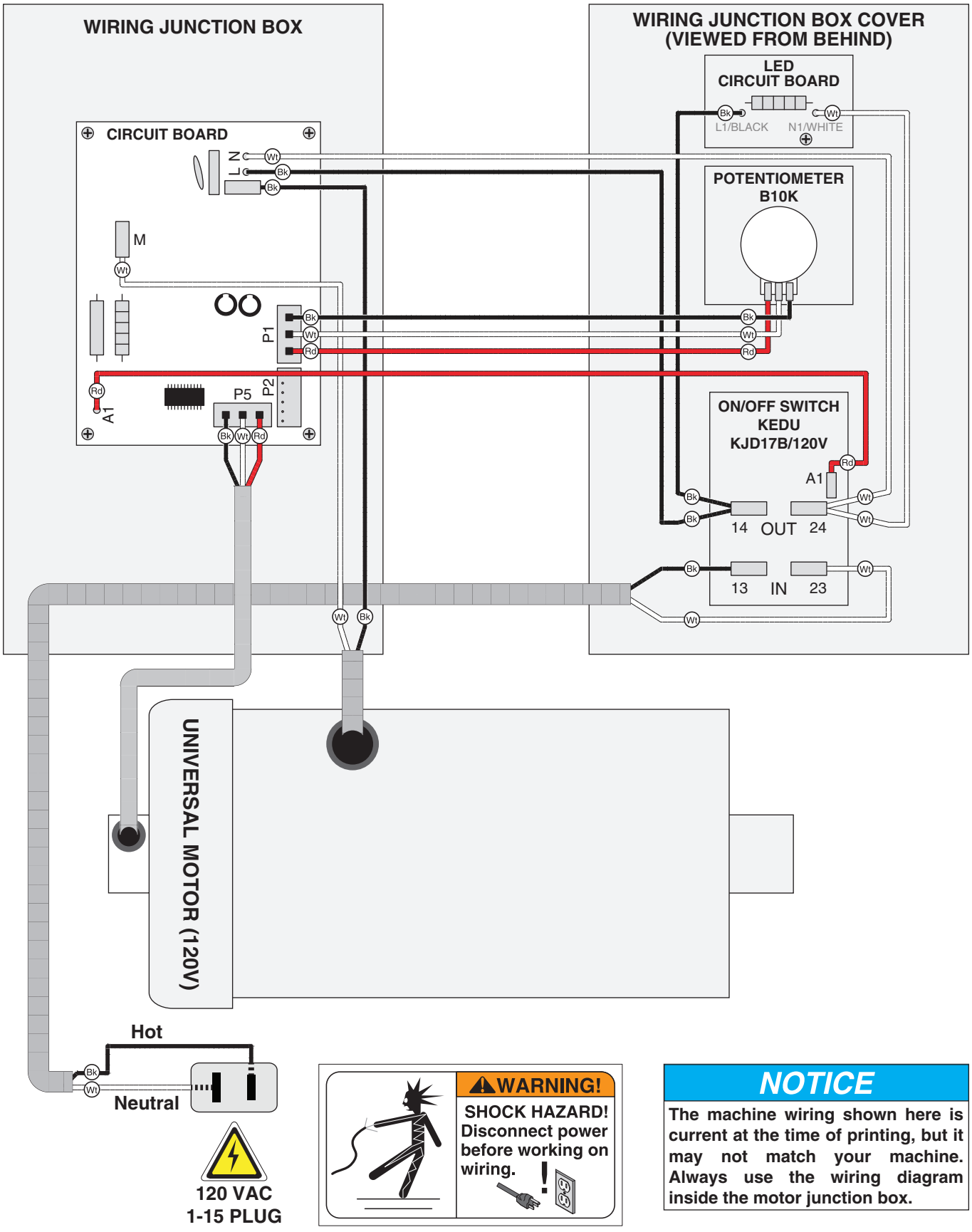

NOTICE

The machine wiring shown here is current at the time of printing, but it may not match your machine. Always use the wiring diagram inside the motor junction box.

Electrical Components

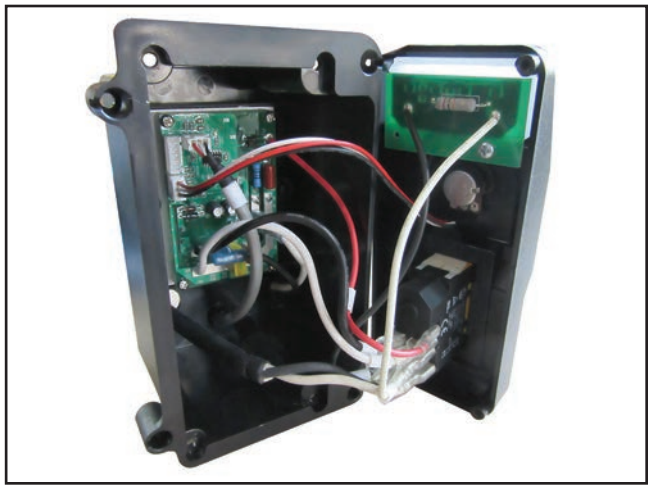

Figure 92. Wiring junction box with cover removed.

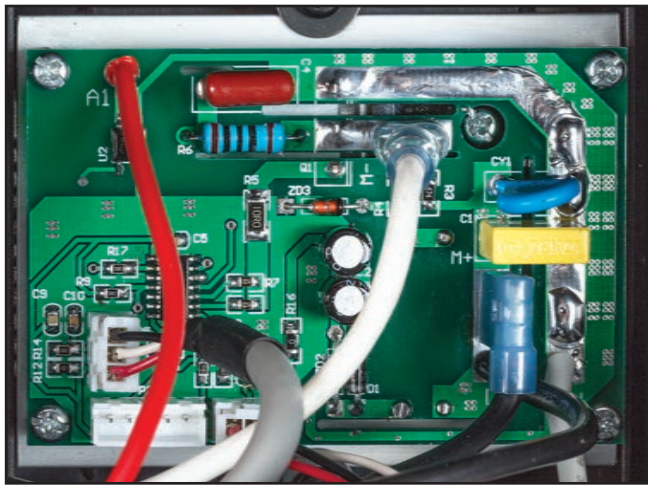

Figure 93. Main circuit board wiring.

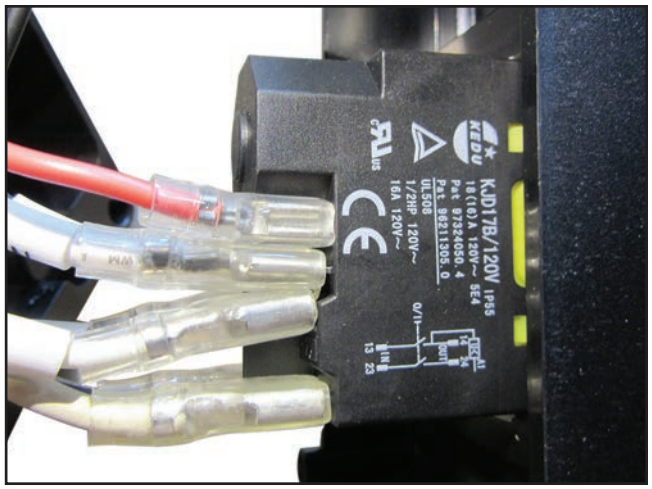

Figure 94. ON/OFF switch KEDU KJD17B 120V.



Figure 95. Motor wiring.

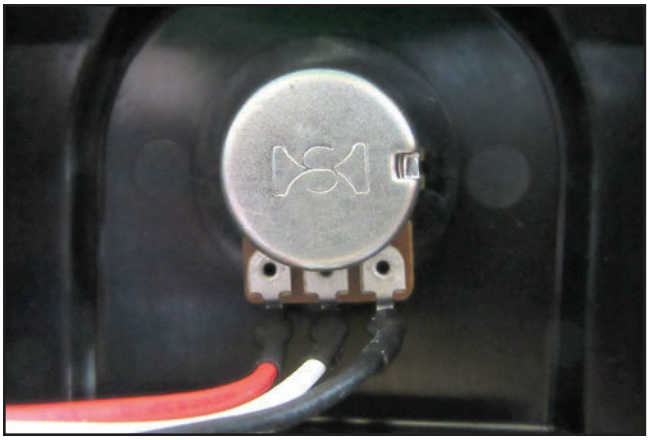

Figure 96. Potentiometer B10K.

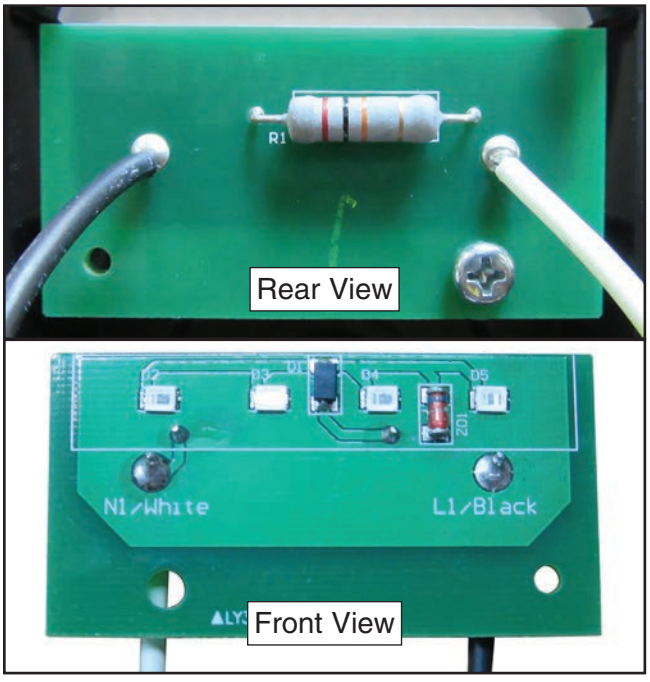

Figure 97. LED circuit board front and rear view.

STOP *READ ELECTRICAL SAFETY ON PAGE 57!*

SECTION 10: PARTS

We do our best to stock replacement parts when possible, but we cannot guarantee that all parts shown are available for purchase. Call **(800) 523-4777** or visit **www.grizzly.com/parts** to check for availability.

Table & Fence

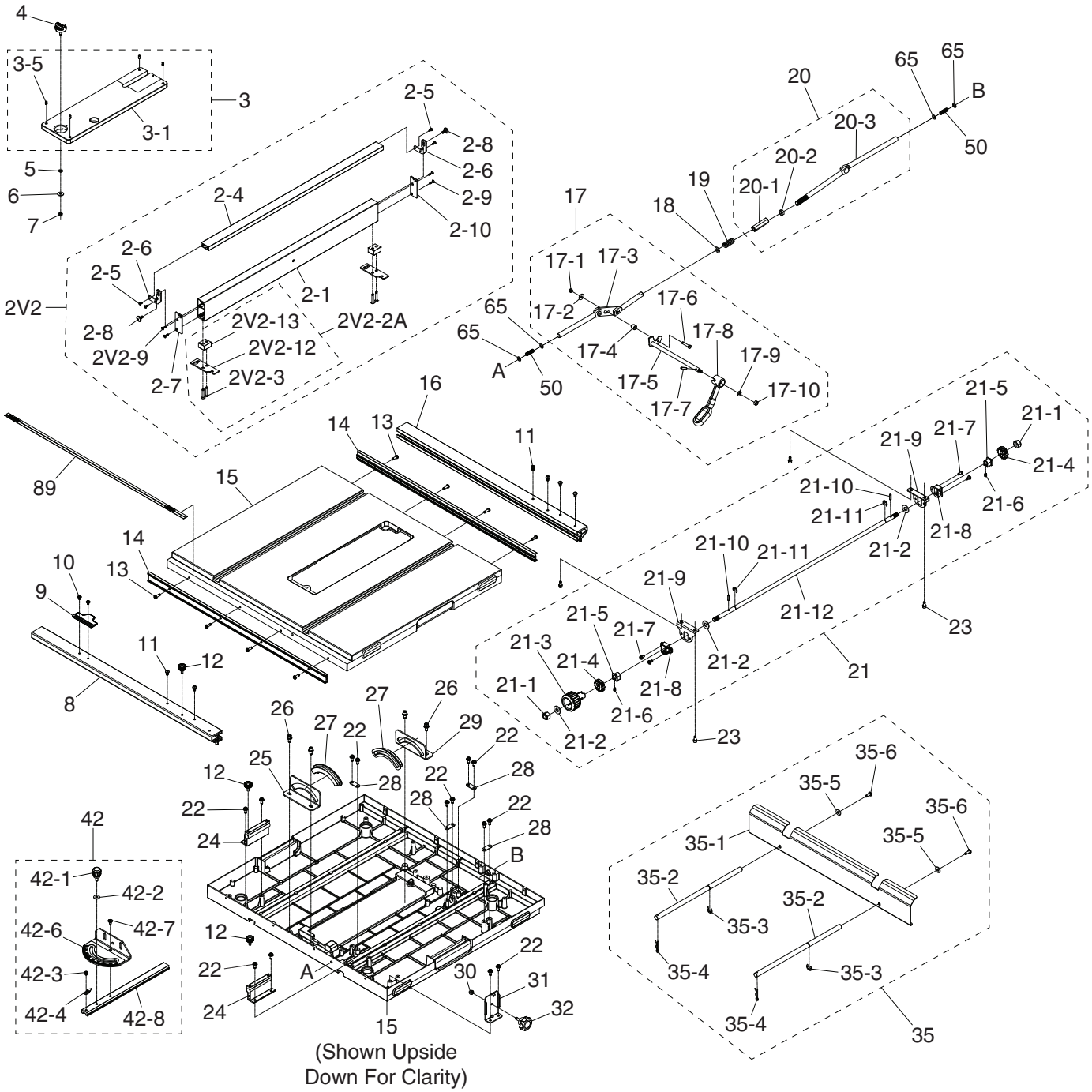

BUY PARTS ONLINE AT GRIZZLY.COM!
Scan QR code to visit our Parts Store.

Table & Fence Parts

REF	PART #	DESCRIPTION
2V2	P0869002V2	FENCE ASSEMBLY V2.01.20
2-1	P0869002-1	FENCE BODY
2V2-2A	P0869002-2A	FENCE MOUNT BRACKET ASSEMBLY
2V2-3	P0869002V2-3	FLAT HD CAP SCR M5-.8 X 12 V2.01.20
2-4	P0869002-4	NARROW RIP AUXILIARY FENCE
2-5	P0869002-5	TAP SCREW M4 X 10
2-6	P0869002-6	NARROW RIP FENCE PIVOT BRACKET
2-7	P0869002-7	FENCE END PLATE (FRONT)
2-8	P0869002-8	SHOULDER SCREW M5-.8 X 10, 8 X 3.5
2V2-9	P0869002V2-9	FLAT HD SCR M4-.7 X 10 V2.01.20
2-10	P0869002-10	FENCE END PLATE (REAR)
2V2-12	P0869002V2-12	FENCE BASE BRACKET V2.01.20
2V2-13	P0869002V2-13	FENCE MOUNT BLOCK
3	P0869003	TABLE INSERT ASSEMBLY
3-1	P0869003-1	TABLE INSERT
3-5	P0869003-5	SET SCREW M5-.8 X 12
4	P0869004	TABLE INSERT LOCK
5	P0869005	WAVY WASHER 6MM
6	P0869006	FLAT WASHER 5MM
7	P0869007	LOCK NUT M5-.8
8	P0869008	RAIL (FRONT)
9	P0869009	FENCE SCALE INDICATOR
10	P0869010	PHLP HD SCR W/WASHER M4-.7 X 8
11	P0869011	SHOULDER SCREW M5-.8 X 6, 6.5 X 3
12	P0869012	KNOB BOLT M5-.8 X 10, D20, ROUND KD
13	P0869013	PHLP HD SCR W/LOCK WASHER M5-.8 X 16
14	P0869014	RAIL MOUNTING BAR
15	P0869015	TABLE
16	P0869016	RAIL (REAR)
17	P0869017	FENCE LOCK ASSEMBLY (FRONT)
17-1	P0869017-1	LOCK NUT M5-.8
17-2	P0869017-2	FLAT WASHER 5MM
17-3	P0869017-3	FENCE LOCK PIVOT ASSEMBLY (FRONT)
17-4	P0869017-4	BUSHING
17-5	P0869017-5	FENCE LOCK SHAFT
17-6	P0869017-6	HEX BOLT M5-.8 X 25
17-7	P0869017-7	ROLL PIN 4 X 22
17-8	P0869017-8	FENCE LOCK LEVER
17-9	P0869017-9	FLAT WASHER 6MM
17-10	P0869017-10	LOCK NUT M6-1
18	P0869018	FLAT WASHER 8MM
19	P0869019	COMPRESSION SPRING 2.6 X 13.8 X 30
20	P0869020	FENCE LOCK ASSEMBLY (REAR)
20-1	P0869020-1	STANDOFF-HEX M8-1.25, 50

REF	PART #	DESCRIPTION
20-2	P0869020-2	HEX NUT M8-1.25
20-3	P0869020-3	FENCE LOCK PIVOT ASSEMBLY (REAR)
21	P0869021	FENCE ADJUSTMENT ASSEMBLY
21-1	P0869021-1	LOCK NUT M10-1.5
21-2	P0869021-2	FLAT WASHER 10MM
21-3	P0869021-3	FENCE ADJUSTMENT DIAL
21-4	P0869021-4	PINION GEAR 15T
21-5	P0869021-5	BEARING BLOCK
21-6	P0869021-6	COMPRESSION SPRING 0.6 X 5.5 X 14
21-7	P0869021-7	PHLP HD SCR W/WASHER M5-.8 X 10
21-8	P0869021-8	BEARING BLOCK HOUSING
21-9	P0869021-9	BEARING BLOCK SUPPORT BRACKET
21-10	P0869021-10	ROLL PIN 4 X 16
21-11	P0869021-11	E-CLIP 10MM
21-12	P0869021-12	PINION SHAFT
22	P0869022	PHLP HD SCR W/WASHERS M5-.8 X 14
23	P0869023	CAP SCREW W/LOCK WASHER M5-.8 X 12
24	P0869024	EXTENSION SHAFT MOUNTING BLOCK
25	P0869025	TRUNNION BRACKET (REAR)
26	P0869026	CAP SCREW W/WASHERS M6-1 X 15
27	P0869027	TRUNNION
28	P0869028	MOUNTING PLATE
29	P0869029	TRUNNION BRACKET (FRONT)
30	P0869030	ACORN NUT M6-1
31	P0869031	GUARD STORAGE BRACKET A
32	P0869032	KNOB BOLT M6-1 X 20, 6-LOBE, D38
35	P0869035	TABLE EXTENSION ASSEMBLY
35-1	P0869035-1	TABLE EXTENSION REST
35-2	P0869035-2	TABLE EXTENSION SHAFT
35-3	P0869035-3	E-CLIP 9MM
35-4	P0869035-4	COTTER PIN 1/4-1/2 X 1-3/4 HAIRPIN
35-5	P0869035-5	FLAT WASHER 6MM
35-6	P0869035-6	PHLP HD SCR M6-1 X 10
42	P0869042	MITER GAUGE ASSEMBLY
42-1	P0869042-1	KNOB BOLT M6-1 X 13, D20, ROUND
42-2	P0869042-2	FLAT WASHER 5 X 14 X 1.5MM (PLASTIC)
42-3	P0869042-3	PHLP HD SCR M5-.8 X 6
42-4	P0869042-4	MITER GAUGE SCALE POINTER
42-6	P0869042-6	MITER GAUGE BODY
42-7	P0869042-7	SHOULDER SCREW M5-.8 X 6, 7.5 X 3.25
42-8	P0869042-8	MITER BAR
50	P0869050	COMPRESSION SPRING 0.8 X 8.6 X 30
65	P0869065	FLAT WASHER 7MM
89	P0869089	FENCE SCALE

BUY PARTS ONLINE AT GRIZZLY.COM!
Scan QR code to visit our Parts Store.

Motor & Blade

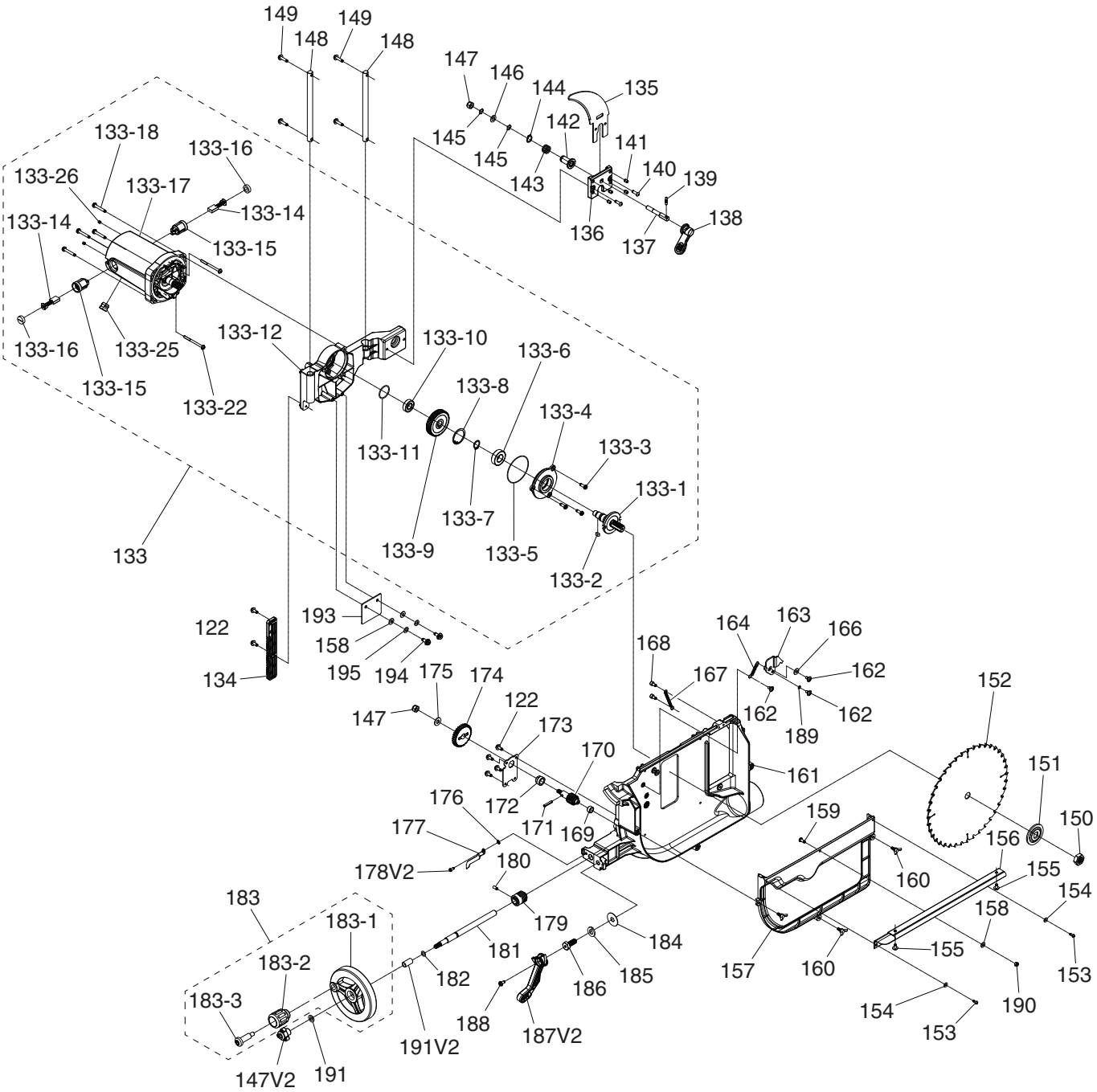

BUY PARTS ONLINE AT GRIZZLY.COM!
Scan QR code to visit our Parts Store.

Motor & Blade Parts

REF	PART #	DESCRIPTION
122	P0869122	PHLP HD SCR W/WASHERS M5-.8 X 14
133	P0869133	MOTOR 2.5HP 120V 1-PH
133-1	P0869133-1	ARBOR 5/8
133-2	P0869133-2	KEY 5 X 5 X 10
133-3	P0869133-3	PHLP HD SCR W/WASHER M5-.8 X 16
133-4	P0869133-4	GEAR HOUSING COVER
133-5	P0869133-5	O-RING 60 X 1.5
133-6	P0869133-6	BALL BEARING 6003-2RS
133-7	P0869133-7	EXT RETAINING RING 17MM
133-8	P0869133-8	INT RETAINING RING 35MM
133-9	P0869133-9	HELICAL GEAR 54T
133-10	P0869133-10	BALL BEARING 6001-2RS
133-11	P0869133-11	O-RING 24.75 X 1.8
133-12	P0869133-12	GEAR HOUSING
133-14	P0869133-14	CARBON BRUSH
133-15	P0869133-15	CARBON BRUSH HOLDER
133-16	P0869133-16	CARBON BRUSH CAP
133-17	P0869133-17	MOTOR HOUSING
133-18	P0869133-18	PHLP HD SCR W/WASHERS M5-.8 X 35
133-22	P0869133-22	PHLP HD TAP SCR W/WASHER M5 X 60
133-25	P0869133-25	STRAIN RELIEF TYPE-1 5/8
133-26	P0869133-26	SET SCREW M5-.8 X 5
134	P0869134	RACK
135	P0869135	RIVING KNIFE
136	P0869136	RIVING KNIFE MOUNTING BLOCK
137	P0869137	LOCK LEVER SHAFT
138	P0869138	RIVING KNIFE LOCK LEVER
139	P0869139	LOCATING PIN 4.13 X 7, 4 X 6.5, 4 X 6.5
140	P0869140	BUTTON HD CAP SCR M5-.8 X 16
141	P0869141	SET SCREW M6-1 X 8
142	P0869142	FLANGED BUSHING
143	P0869143	COMPRESSION SPRING 1.7 X 18 X 16
144	P0869144	EXT RETAINING RING 14MM
145	P0869145	WAVY WASHER 8MM
146	P0869146	FLAT WASHER 8MM
147	P0869147	LOCK NUT M8-1.25
147V2	P0869147V2	LOCK KNOB V2.03.20
148	P0869148	LEADSCREW
149	P0869149	PHLP HD SCR W/WASHERS M5-.8 X 22
150	P0869150	HEX NUT 5/8-12
151	P0869151	ARBOR FLANGE
152	P0869152	BLADE 10" X 5/8 X 1/8 40T
153	P0869153	TAP SCREW M4 X 10
154	P0869154	FLAT WASHER 4MM

REF	PART #	DESCRIPTION
155	P0869155	PHLP HD SCR W/WASHER M5-.8 X 10
156	P0869156	DUST SHROUD
157	P0869157	BLADE HOUSING DUST COVER
158	P0869158	FLAT WASHER 5MM
159	P0869159	PHLP HD SCR M5-.8 X 12
160	P0869160	WING SCREW W/LOCK WASHER M5-.8 X 12
161	P0869161	BLADE HOUSING W/DUST PORT
162	P0869162	SHOULDER SCREW M5-.8 X 6, 6 X 3.5
163	P0869163	ARBOR LOCK
164	P0869164	EXTENSION SPRING 0.6 X 6.3 X 23
166	P0869166	FLAT WASHER 6MM
167	P0869167	EXTENSION SPRING 1 X 6.7 X 56
168	P0869168	CAP SCREW M5-.8 X 10
169	P0869169	BUSHING
170	P0869170	WORM GEAR 20T
171	P0869171	ROLL PIN 4 X 25
172	P0869172	BUSHING
173	P0869173	GEAR CASE COVER
174	P0869174	GEAR 34T
175	P0869175	FLAT WASHER 8MM
176	P0869176	EXT TOOTH WASHER 4MM
177	P0869177	SCALE POINTER
178V2	P0869178V2	CAP SCREW M4-.7 X 10 V2.01.20
179	P0869179	WORM
180	P0869180	SET SCREW M5-.8 X 12
181	P0869181	WORM SHAFT
182	P0869182	EXT RETAINING RING 12MM
183	P0869183	HANDWHEEL ASSEMBLY
183-1	P0869183-1	HANDWHEEL TYPE-33 130D X 8B-F X M6-1
183-2	P0869183-2	HOLLOW HANDLE 33 X 44, 10
183-3	P0869183-3	SHOULDER SCREW M6-1 X 12, 10 X 30
184	P0869184	FLAT WASHER 10MM
185	P0869185	LOCK WASHER 10MM
186	P0869186	HEX BOLT M10-1.5 X 25 INT THREADS M5-.8
187V2	P0869187V2	BLADE TILT LOCK LEVER V2.06.20
188	P0869188	PHLP HD LOCK SCREW W/WASHER M5-.8 X 12
189	P0869189	WAVY WASHER 6MM
190	P0869190	LOCK NUT M5-.8
191	P0869191	FLAT WASHER 8MM
191V2	P0869191V2	KNOB SPACER V2.03.20
193	P0869193	SAFETY PLATE
194	P0869194	PHLP HD SCR M5-.8 X 14
195	P0869195	LOCK WASHER 5MM

BUY PARTS ONLINE AT GRIZZLY.COM!
Scan QR code to visit our Parts Store.

Base

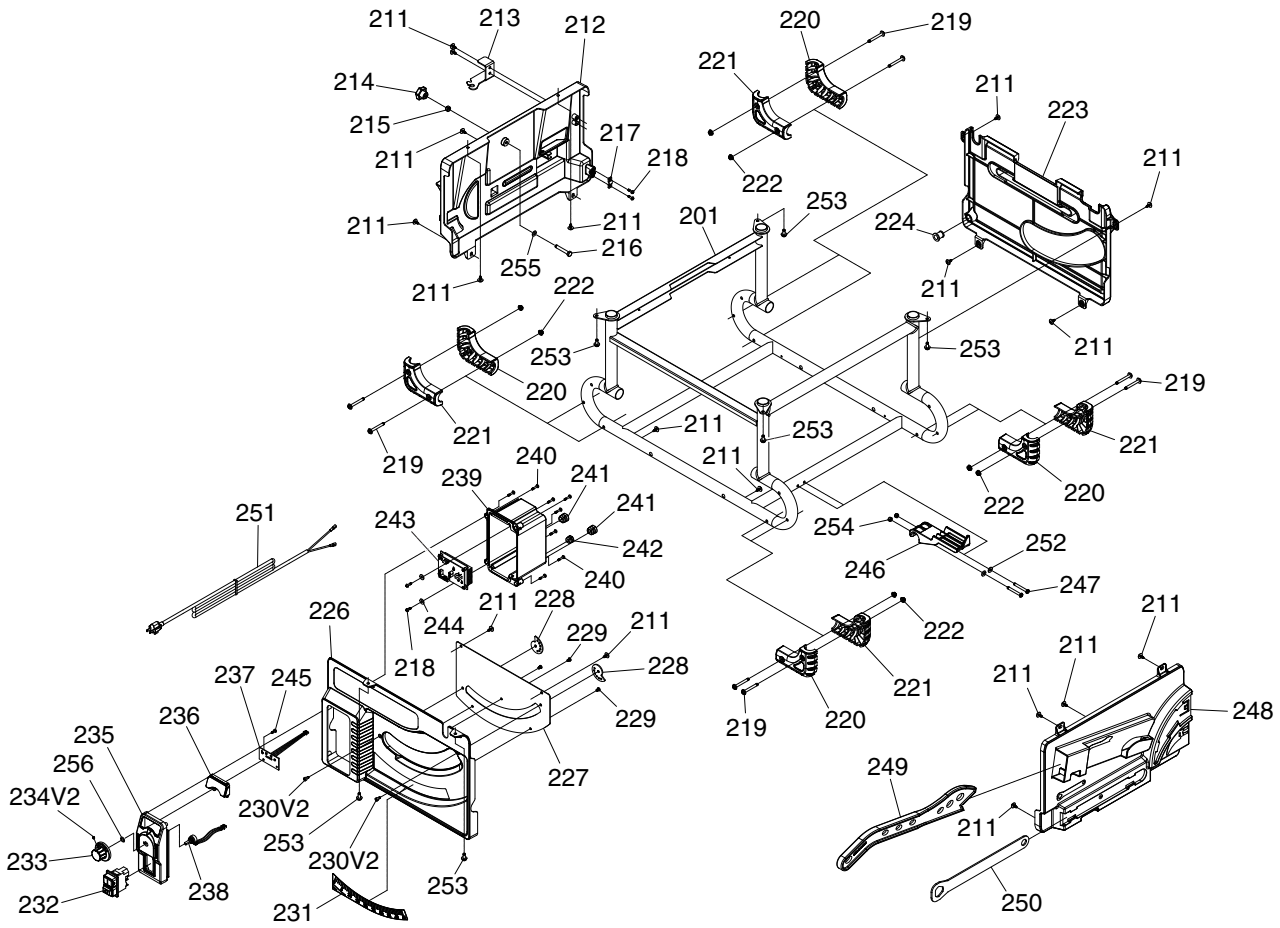

REF	PART #	DESCRIPTION
201	P0869201	FRAME
211	P0869211	TAP SCREW M5 X 12
212	P0869212	COVER PLATE (LEFT)
213	P0869213	ANTI-KICKBACK BRACKET
214	P0869214	KNOB M6-1, 6-LOBE, D30
215	P0869215	LOCK NUT M6-1
216	P0869216	HEX BOLT M6-1 X 40
217	P0869217	CORD ROUTING CLAMP
218	P0869218	TAP SCREW M4 X 12
219	P0869219	PHLP HD SCR W/WASHER M5-.8 X 45
220	P0869220	FOOT A
221	P0869221	FOOT B
222	P0869222	FLANGE NUT M5-.8
223	P0869223	COVER PLATE (REAR)
224	P0869224	CORD SLEEVE (RUBBER)
226	P0869226	COVER PLATE (FRONT)
227	P0869227	BLADE TILT LOCK PLATE
228	P0869228	BLADE TILT STOP CAM
229	P0869229	PHLP HD SCR M4-.7 X 6
230V2	P0869230V2	CAP SCREW M5-.8 X 8 V2.01.20
231	P0869231	BLADE TILT SCALE
232	P0869232	ON/OFF SWITCH KEDU KJD17B 120V
233	P0869233	VARIABLE-SPEED DIAL

REF	PART #	DESCRIPTION
234V2	P0869234V2	SET SCREW M4-.7 X 6 V2.01.20
235	P0869235	SWITCH COVER
236	P0869236	LED LENSE
237	P0869237	LED CIRCUIT BOARD
238	P0869238	POTENTIOMETER B10K
239	P0869239	SWITCH BOX
240	P0869240	TAP SCREW M4 X 16
241	P0869241	STRAIN RELIEF TYPE-1 5/8
242	P0869242	STRAIN RELIEF TYPE-1 1/2
243	P0869243	CIRCUIT BOARD
244	P0869244	FLAT WASHER 4MM
245	P0869245	TAP SCREW M4 X 10
246	P0869246	GUARD STORAGE BRACKET B
247	P0869247	PHLP HD SCR M5-.8 X 40
248	P0869248	COVER PLATE (RIGHT)
249	P0869249	PUSH STICK
250	P0869250	ARBOR WRENCH 23MM CLOSED-END
251	P0869251	POWER CORD 14G 2W 95" 1-15P
252	P0869252	FLAT WASHER 5MM
253	P0869253	PHLP HD SCR W/WASHERS M5-.8 X 14
254	P0869254	LOCK NUT M5-.8
255	P0869255	FLAT WASHER 6MM
256	P0869256	O-RING 4.8 X 1.9 P5

BUY PARTS ONLINE AT GRIZZLY.COM!
Scan QR code to visit our Parts Store.

Blade Guard

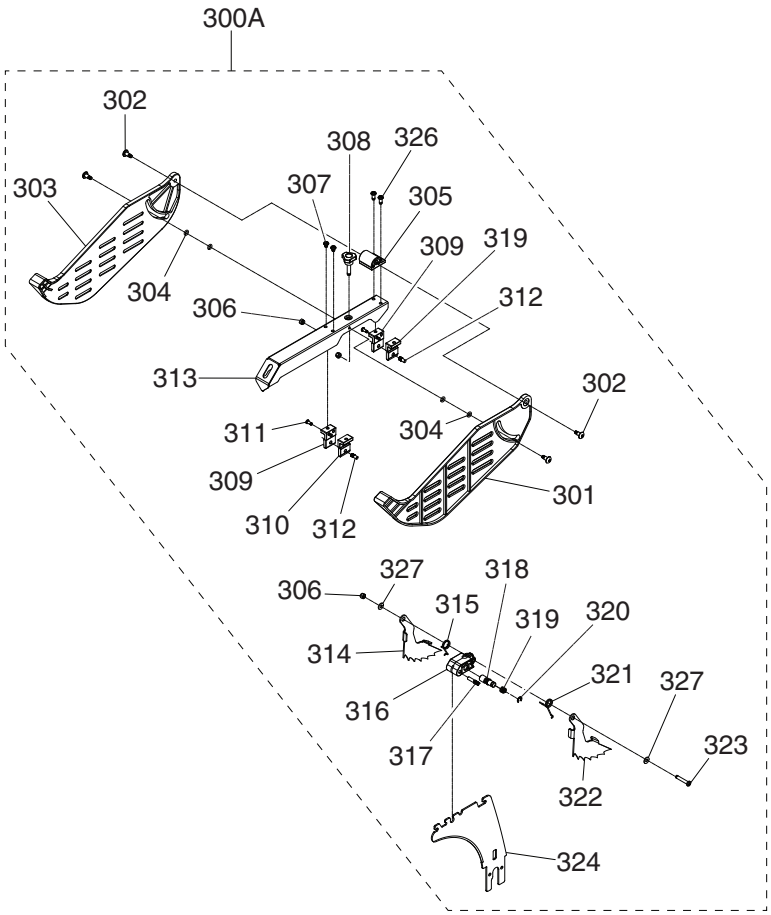

REF	PART #	DESCRIPTION
300A	P0869300A	BLADE GUARD ASSEMBLY
301	P0869301	BLADE GUARD COVER (RIGHT)
302	P0869302	SHOULDER SCREW M5-.8 X 6, 6 X 8
303	P0869303	BLADE GUARD COVER (LEFT)
304	P0869304	O-RING 5.65 X 2 P6
305	P0869305	BLADE GUARD PIVOT BLOCK
306	P0869306	LOCK NUT M5-.8
307	P0869307	PHLP HD SCR M5-.8 X 6
308	P0869308	KNOB BOLT M6-1 X 26, 3-LOBE, D26
309	P0869309	PIVOT GUIDE BRACKET (LEFT)
310	P0869310	PIVOT GUIDE BRACKET (RIGHT)
311	P0869311	PHLP HD SCR M4-.7 X 10
312	P0869312	LOCATING PIN 5.3 X 4, 5 X 9.5
313	P0869313	BLADE GUARD BODY

REF	PART #	DESCRIPTION
314	P0869314	ANTI-KICKBACK PAWL (LEFT)
315	P0869315	TORSION SPRING (LEFT)
316	P0869316	ANTI-KICKBACK PAWL MOUNTING BLOCK
317	P0869317	LOCATING PIN 5.25 X 10, 5 X 16
318	P0869318	ANTI-KICKBACK PAWL RELEASE PIN
319	P0869319	COMPRESSION SPRING 0.7 X 10.6 X 11
320	P0869320	E-CLIP 7MM
321	P0869321	TORSION SPRING (RIGHT)
322	P0869322	ANTI-KICKBACK PAWL (RIGHT)
323	P0869323	PHLP HD SCR M5-.8 X 30
324	P0869324	SPREADER
326	P0869326	PHLP HD SCR M5-.8 X 12
327	P0869327	FLAT WASHER 5MM

BUY PARTS ONLINE AT GRIZZLY.COM!
Scan QR code to visit our Parts Store.

Stand (G0870)

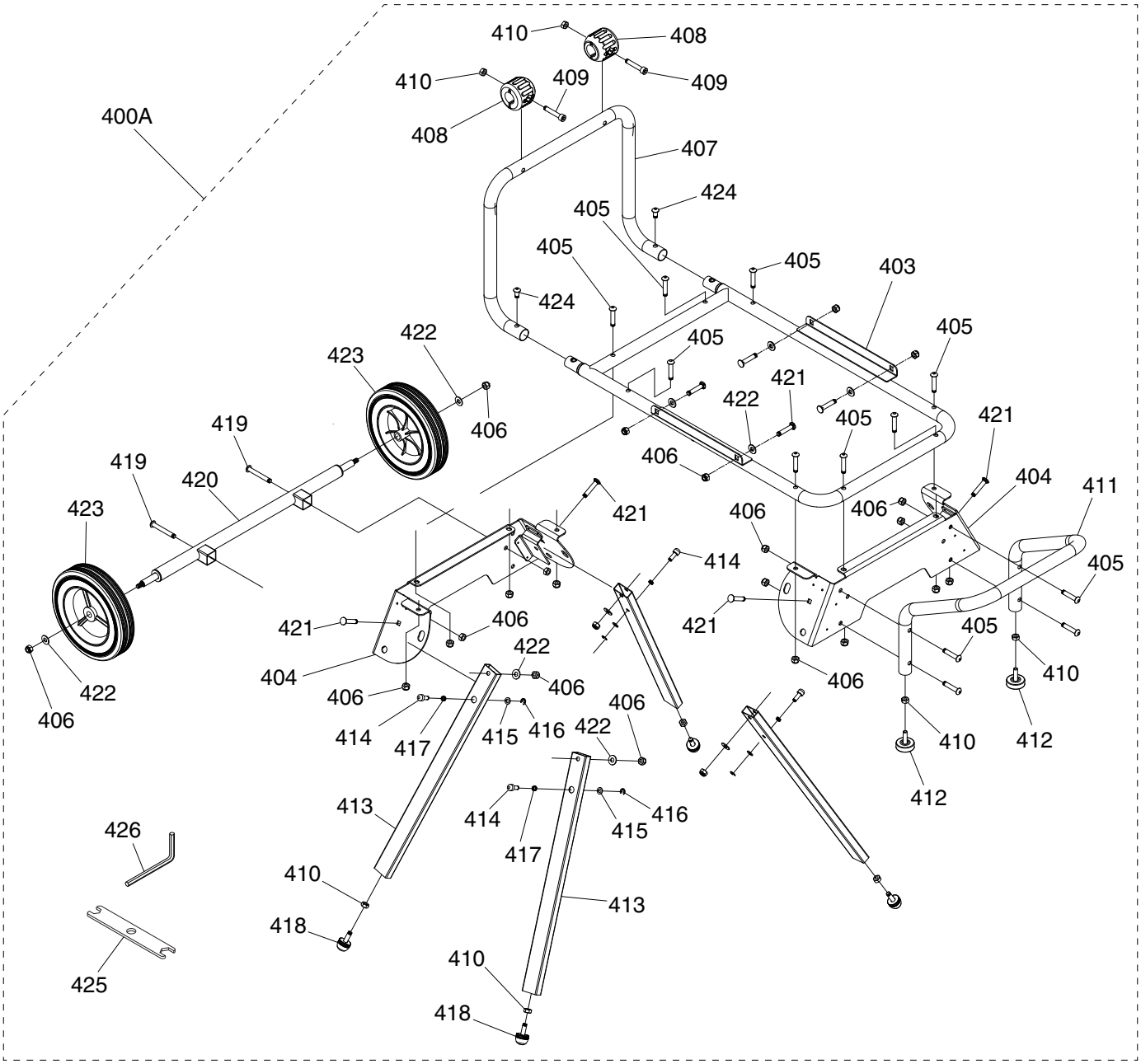

REF	PART #	DESCRIPTION
400A	P0870400A	ROLLER STAND ASSEMBLY
403	P0870403	STAND BODY
404	P0870404	STAND LEG BRACKET
405	P0870405	BUTTON HD CAP SCR M8-1.25 X 40
406	P0870406	LOCK NUT M8-1.25
407	P0870407	HANDLE (LEFT)
408	P0870408	BUMPER
409	P0870409	CAP SCREW M8-1.25 X 45
410	P0870410	HEX NUT M8-1.25
411	P0870411	HANDLE (RIGHT)
412	P0870412	HANDLE FOOT M8-1.25 X 22
413	P0870413	STAND LEG
414	P0870414	CLEVIS PIN, BUTTON HEAD-GROOVED

REF	PART #	DESCRIPTION
415	P0870415	FLAT WASHER 7MM
416	P0870416	E-CLIP 7MM
417	P0870417	COMPRESSION SPRING 0.8 X 9.3 X 18
418	P0870418	RUBBER FOOT M8-1.25 X 20
419	P0870419	CAP SCREW M8-1.25 X 60
420	P0870420	WHEEL AXLE
421	P0870421	CARRIAGE BOLT M8-1.25 X 40
422	P0870422	FLAT WASHER 8MM
423	P0870423	WHEEL
424	P0870424	BUTTON HD CAP SCR M8-1.25 X 16
425	P0870425	FLAT WRENCH 10 X 13MM
426	P0870426	HEX WRENCH 5MM

BUY PARTS ONLINE AT GRIZZLY.COM!
Scan QR code to visit our Parts Store.

Labels & Cosmetics

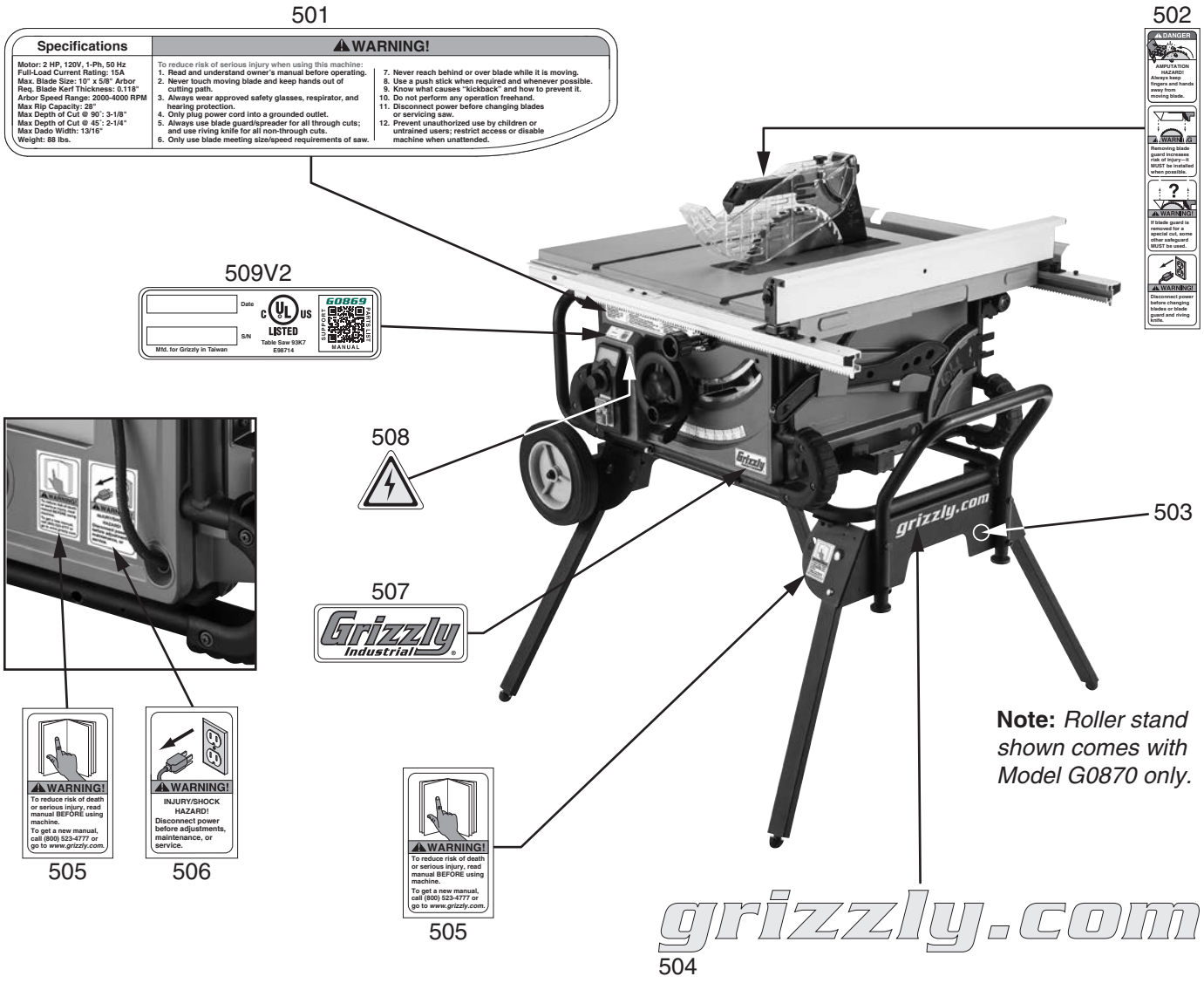

Note: *Roller stand shown comes with Model G0870 only.*

REF	PART #	DESCRIPTION
501	P0869501	MACHINE SPECS/WARNING LABEL (G0869)
501	P0870501	MACHINE SPECS/WARNING LABEL (G0870)
502	P0869502	BLADE GUARD WARNING LABEL
503	P0869503	TOUCH-UP PAINT, GRIZZLY BLACK
505	P0869505	READ MANUAL LABEL

REF	PART #	DESCRIPTION
506	P0869506	DISCONNECT POWER LABEL
507	P0869507	GRIZZLY LOGO LABEL
508	P0869508	ELECTRICITY LABEL
509V2	P0869509V2	QR CODE LABEL (G0869) V2.08.19
509V2	P0870509V2	QR CODE LABEL (G0870) V2.08.19

⚠WARNING

Safety labels help reduce the risk of serious injury caused by machine hazards. If any label comes off or becomes unreadable, the owner of this machine MUST replace it in the original location before resuming operations. For replacements, contact (800) 523-4777 or www.grizzly.com.

WARRANTY & RETURNS

Grizzly Industrial, Inc. warrants every product it sells for a period of **1 year** to the original purchaser from the date of purchase. This warranty does not apply to defects due directly or indirectly to misuse, abuse, negligence, accidents, repairs or alterations or lack of maintenance. This is Grizzly's sole written warranty and any and all warranties that may be implied by law, including any merchantability or fitness, for any particular purpose, are hereby limited to the duration of this written warranty. We do not warrant or represent that the merchandise complies with the provisions of any law or acts unless the manufacturer so warrants. In no event shall Grizzly's liability under this warranty exceed the purchase price paid for the product and any legal actions brought against Grizzly shall be tried in the State of Washington, County of Whatcom.

We shall in no event be liable for death, injuries to persons or property or for incidental, contingent, special, or consequential damages arising from the use of our products.

The manufacturers reserve the right to change specifications at any time because they constantly strive to achieve better quality equipment. We make every effort to ensure that our products meet high quality and durability standards and we hope you never need to use this warranty.

In the event you need to use this warranty, contact us by mail or phone and give us all the details. We will then issue you a "Return Number," which must be clearly posted on the outside as well as the inside of the carton. We will not accept any item back without this number. Proof of purchase must accompany the merchandise.

Please feel free to write or call us if you have any questions about the machine or the manual.

Thank you again for your business and continued support. We hope to serve you again soon.

To take advantage of this warranty, you must register it at **https://www.grizzly.com/secureforms/warranty-card**, or you can scan the QR code below to be automatically directed to our warranty registration page. Enter all applicable information for the product.



grizzly.com®

TOOL WEBSITE

Buy Direct and Save with Grizzly® – Trusted, Proven and a Great Value!

~Since 1983~

Visit Our Website Today For Current Specials!

ORDER

24 HOURS A DAY!

1-800-523-4777

