Grizzly Industrial, Inc.®

MODEL G0865 8" BENCH GRINDER w/LED LIGHTS

OWNER'S MANUAL

(For models manufactured since 09/25)

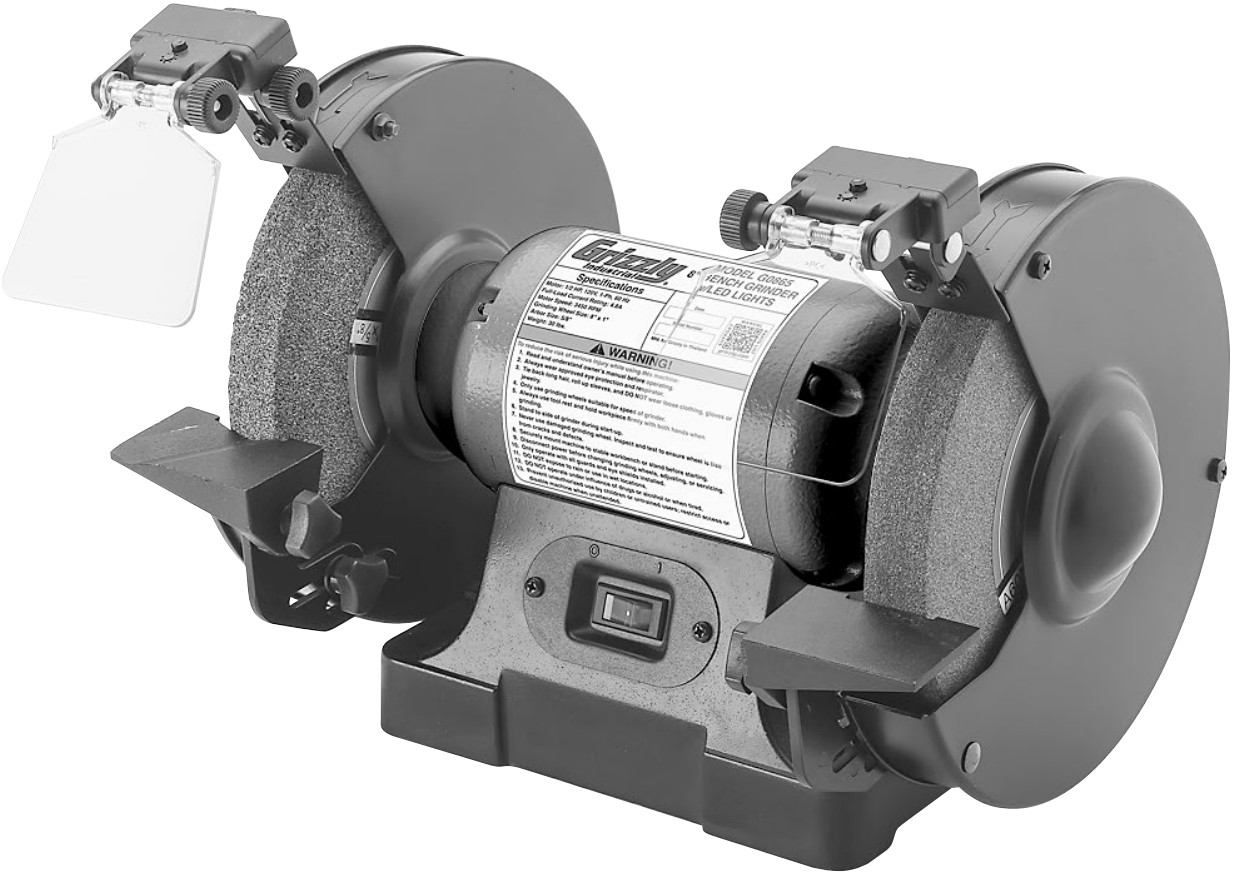

COPYRIGHT © APRIL, 2019 BY GRIZZLY INDUSTRIAL, INC., REVISED AUGUST 2025 (RO)
WARNING: NO PORTION OF THIS MANUAL MAY BE REPRODUCED IN ANY SHAPE OR FORM WITHOUT THE WRITTEN APPROVAL OF GRIZZLY INDUSTRIAL, INC.
#RSAL20149 PRINTED IN THAILAND V2.08.25

⚠ WARNING!

This manual provides critical safety instructions on the proper setup, operation, maintenance, and service of this machine/tool. Save this document, refer to it often, and use it to instruct other operators.

Failure to read, understand and follow the instructions in this manual may result in fire or serious personal injury—including amputation, electrocution, or death.

The owner of this machine/tool is solely responsible for its safe use. This responsibility includes but is not limited to proper installation in a safe environment, personnel training and usage authorization, proper inspection and maintenance, manual availability and comprehension, application of safety devices, cutting/sanding/grinding tool integrity, and the usage of personal protective equipment.

The manufacturer will not be held liable for injury or property damage from negligence, improper training, machine modifications or misuse.

⚠ WARNING!

Some dust created by power sanding, sawing, grinding, drilling, and other construction activities contains chemicals known to the State of California to cause cancer, birth defects or other reproductive harm. Some examples of these chemicals are:

- **Lead from lead-based paints.**
- **Crystalline silica from bricks, cement and other masonry products.**
- **Arsenic and chromium from chemically-treated lumber.**

Your risk from these exposures varies, depending on how often you do this type of work. To reduce your exposure to these chemicals: Work in a well ventilated area, and work with approved safety equipment, such as those dust masks that are specially designed to filter out microscopic particles.

Table of Contents

INTRODUCTION **2**
Contact Info 2
Manual Accuracy 2
Identification 3
Controls & Components 4
Machine Data Sheet 5

SECTION 1: SAFETY **7**
Safety Instructions for Machinery 7
Additional Safety for Grinders 9

SECTION 2: POWER SUPPLY **10**

SECTION 3: SETUP **12**
Needed for Setup 12
Unpacking 12
Inventory 13
Site Considerations 14
Bench Mounting 14
Assembly 15
Test Run 17

SECTION 4: OPERATIONS **18**
Operation Overview 18
Workpiece Inspection 19
Wheel Selection 19
Wheel Care 20
Wheel Inspection 20
Wheel Dressing 21
Wheel Removal & Installation 21

SECTION 5: MAINTENANCE **23**
Schedule 23
Grinding Wheels 23
Cleaning & Protecting 23
Wheel Dressing 23
Wheel Storage 23

SECTION 6: SERVICE **24**
Troubleshooting 24

SECTION 7: WIRING **25**
Wiring Safety Instructions 25
Wiring Diagram 26

SECTION 8: PARTS **27**
Main 27

WARRANTY & RETURNS **29**

INTRODUCTION

Contact Info

We stand behind our machines! If you have questions or need help, contact us with the information below. Before contacting, make sure you get the **serial number** and **manufacture date** from the machine ID label. This will help us help you faster.

Grizzly Technical Support
1815 W. Battlefield
Springfield, MO 65807
Phone: (570) 546-9663
Email: techsupport@grizzly.com

We want your feedback on this manual. What did you like about it? Where could it be improved? Please take a few minutes to give us feedback.

Grizzly Documentation Manager
P.O. Box 2069
Bellingham, WA 98227-2069
Email: manuals@grizzly.com

⚠WARNING

Like all machinery there is potential danger when operating this machine. Accidents are frequently caused by lack of familiarity or failure to pay attention. Use this machine with respect and caution to decrease the risk of operator injury. If normal safety precautions are overlooked or ignored, serious personal injury may occur.

⚠CAUTION

No list of safety guidelines can be complete. Every shop environment is different. Always consider safety first, as it applies to your individual working conditions. Use this and other machinery with caution and respect. Failure to do so could result in serious personal injury, damage to equipment, or poor work results.

Manual Accuracy

We are proud to provide a high-quality owner's manual with your new machine!

We made every effort to be exact with the instructions, specifications, drawings, and photographs in this manual. Sometimes we make mistakes, but our policy of continuous improvement also means that **sometimes the machine you receive is slightly different than shown in the manual**.

If you find this to be the case, and the difference between the manual and machine leaves you confused or unsure about something, check our website for an updated version. We post current manuals and manual updates for free on our website at **www.grizzly.com**.

Alternatively, you can call our Technical Support for help. Before calling, make sure you write down the **manufacture date** and **serial number** from the machine ID label (see below). This information is required for us to provide proper tech support, and it helps us determine if updated documentation is available for your machine.

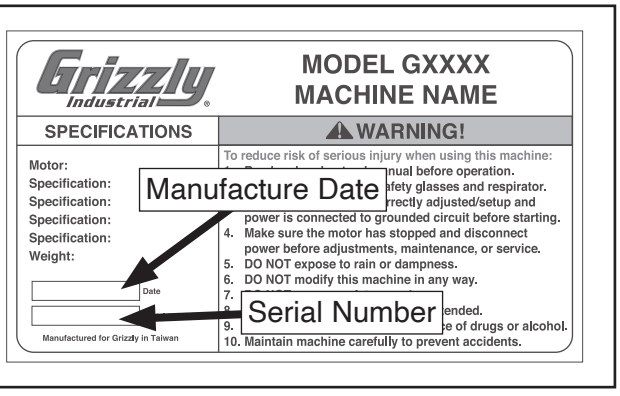

Identification

Become familiar with the names and locations of the features shown below to better understand the instructions in this manual.

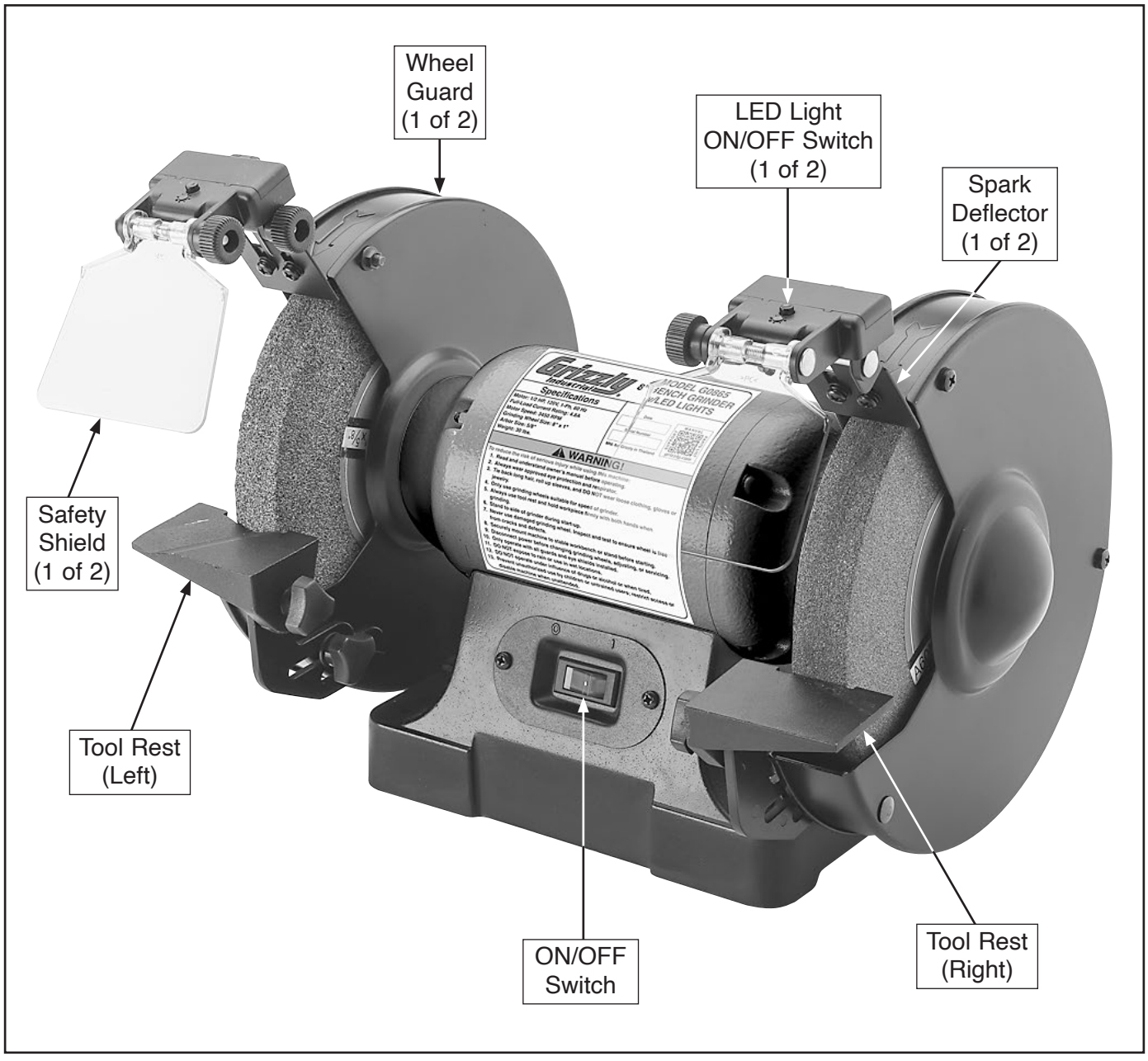

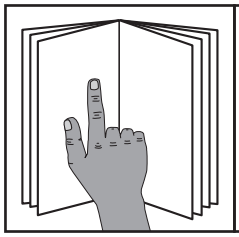

⚠WARNING

To reduce your risk of serious injury, read this entire manual BEFORE using machine.

Controls & Components

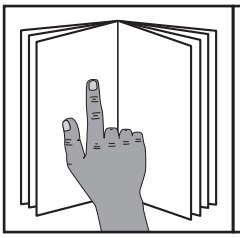

⚠WARNING

To reduce your risk of serious injury, read this entire manual BEFORE using machine.

Refer to the following figures and descriptions to become familiar with the basic controls and components of this machine. Understanding these items and how they work will help you understand the rest of the manual and minimize your risk of injury when operating this machine.

Control or Component Description

A. **LED Light ON/OFF Switch (1 of 2):** Turns work lamp ***ON*** or ***OFF***.

B. **Wheel Guard (1 of 2):** Prevents accidental contact with grinding wheel, and contains sparks during grinding.

C. **Spark Deflector (1 of 2):** Reduces amount of sparks spraying back towards the operator.

D. **Safety Shield:** Acts as a protective barrier against sparks during grinding operations. This shield is not a substitute for personal protective equipment.

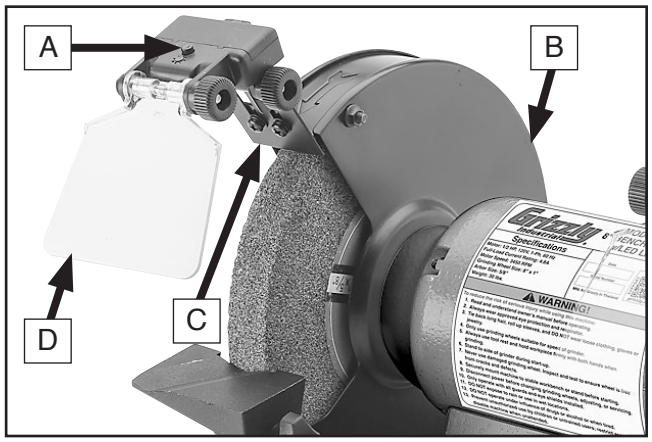

Figure 1. Safety and lighting components.

E. **ON/OFF Switch:** Turns motor ***ON*** when pushed right; turns motor ***OFF*** when pushed left.

F. **Tool Rest (Right):** Provides flat surface to rest workpiece on during operations.

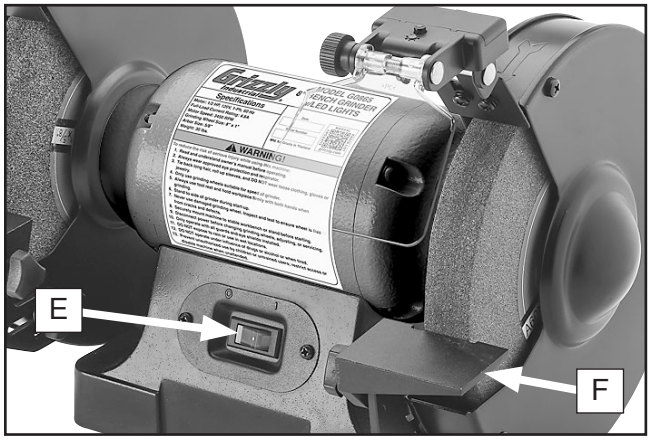

Figure 2. Safety and electrical components.

G. **Tool Rest (Left):** Provides flat surface to rest workpiece on during operations. Includes a V-groove for controlling angle of contact with grinding wheel.

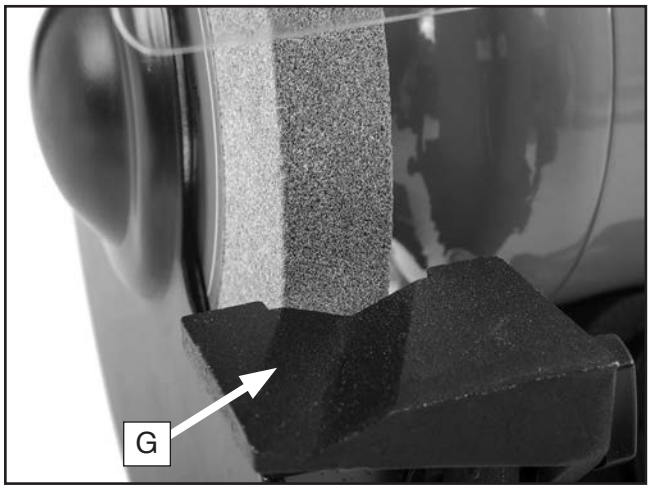

Figure 3. Left tool rest with V-groove.

MACHINE DATA SHEET

Customer Service #: (570) 546-9663 · To Order Call: (800) 523-4777 · Fax #: (800) 438-5901

MODEL G0865 8" BENCH GRINDER WITH LED LIGHTS

Product Dimensions:

Weight	30 lbs.
Width (side-to-side) x Depth (front-to-back) x Height	15-1/2 x 13-1/2 x 15 in.
Footprint (Length x Width)	9 x 6-1/2 in.

Shipping Dimensions:

Type	Cardboard
Content	Machine
Weight	32 lbs.
Length x Width x Height	18 x 14 x 13 in.

Electrical:

Power Requirement	120V, Single-Phase, 60 Hz
Full-Load Current Rating	4.8A
Minimum Circuit Size	15A
Connection Type	Cord and Plug
Power Cord Included	Yes
Power Cord Length	72 in.
Power Cord Gauge	18 AWG
Included Plug Type	5-15
Switch Type	ON/OFF Rocker Switch

Motors:

Main

Horsepower	1/2 HP
Phase	Single-Phase
Amps	4.8A
Speed	3450 RPM
Type	Permanent Split Capacitor
Power Transfer	Direct Drive
Bearings	Shielded & Permanently Lubricated

Main Specifications:

Operation Info

Grinder Type	Bench
Wheel Type	Type 1
Right Wheel Material	Aluminum Oxide, 36-Grit
Left Wheel Material	Aluminum Oxide, 60-Grit
Wheel Diameter	8 in.
Wheel Thickness	1 in.
Wheel Bore	5/8 in.

Table Info

Work Rest Width	2-3/4 in.
Work Rest Length	1-3/4 in.
Work Rest Thickness	1/8 in.
Work Rest Tilt	0 - 45 deg.

Construction

Base	Cast Aluminum
Work Rest	Cast Aluminum
Eye Shields	Plastic
Lamp	LED

Other Specifications:

Country of Origin	China
Warranty	1 Year
Approximate Assembly & Setup Time	15 Minutes
Serial Number Location	Machine ID Label

Features:

Dual LED's Integrated into Eye Shields
Adjustable Tool Rest
Left Tool Rest Grooved for Drill Bits
Includes 36-Grit & 60-Grit Grinding Wheels

SECTION 1: SAFETY

For Your Own Safety, Read Instruction Manual Before Operating This Machine

The purpose of safety symbols is to attract your attention to possible hazardous conditions. This manual uses a series of symbols and signal words intended to convey the level of importance of the safety messages. The progression of symbols is described below. Remember that safety messages by themselves do not eliminate danger and are not a substitute for proper accident prevention measures. Always use common sense and good judgment.

⚠DANGER **Indicates an imminently hazardous situation which, if not avoided, WILL result in death or serious injury.**

⚠WARNING **Indicates a potentially hazardous situation which, if not avoided, COULD result in death or serious injury.**

⚠CAUTION **Indicates a potentially hazardous situation which, if not avoided, MAY result in minor or moderate injury. It may also be used to alert against unsafe practices.**

NOTICE **Alerts the user to useful information about proper operation of the machine to avoid machine damage.**

Safety Instructions for Machinery

⚠WARNING

OWNER'S MANUAL. Read and understand this owner's manual BEFORE using machine.

TRAINED OPERATORS ONLY. Untrained operators have a higher risk of being hurt or killed. Only allow trained/supervised people to use this machine. When machine is not being used, disconnect power, remove switch keys, or lock-out machine to prevent unauthorized use—especially around children. Make your workshop kid proof!

DANGEROUS ENVIRONMENTS. Do not use machinery in areas that are wet, cluttered, or have poor lighting. Operating machinery in these areas greatly increases the risk of accidents and injury.

MENTAL ALERTNESS REQUIRED. Full mental alertness is required for safe operation of machinery. Never operate under the influence of drugs or alcohol, when tired, or when distracted.

ELECTRICAL EQUIPMENT INJURY RISKS. You can be shocked, burned, or killed by touching live electrical components or improperly grounded machinery. To reduce this risk, only allow qualified service personnel to do electrical installation or repair work, and always disconnect power before accessing or exposing electrical equipment.

DISCONNECT POWER FIRST. Always disconnect machine from power supply BEFORE making adjustments, changing tooling, or servicing machine. This prevents an injury risk from unintended startup or contact with live electrical components.

EYE PROTECTION. Always wear ANSI-approved safety glasses or a face shield when operating or observing machinery to reduce the risk of eye injury or blindness from flying particles. Everyday eyeglasses are NOT approved safety glasses.

⚠WARNING

WEARING PROPER APPAREL. Do not wear loose clothing, gloves, neckties, or jewelry that can become entangled in moving parts. Always tie back or cover long hair. Wear non-slip footwear to reduce risk of slipping and losing control or accidentally contacting cutting tool or moving parts.

HAZARDOUS DUST. Dust created by machinery operations may cause cancer, birth defects, or long-term respiratory damage. Be aware of dust hazards associated with each workpiece material. Always wear a NIOSH-approved respirator to reduce your risk.

HEARING PROTECTION. Always wear hearing protection when operating or observing loud machinery. Extended exposure to this noise without hearing protection can cause permanent hearing loss.

REMOVE ADJUSTING TOOLS. Tools left on machinery can become dangerous projectiles upon startup. Never leave chuck keys, wrenches, or any other tools on machine. Always verify removal before starting!

USE CORRECT TOOL FOR THE JOB. Only use this tool for its intended purpose—do not force it or an attachment to do a job for which it was not designed. Never make unapproved modifications—modifying tool or using it differently than intended may result in malfunction or mechanical failure that can lead to personal injury or death!

AWKWARD POSITIONS. Keep proper footing and balance at all times when operating machine. Do not overreach! Avoid awkward hand positions that make workpiece control difficult or increase the risk of accidental injury.

CHILDREN & BYSTANDERS. Keep children and bystanders at a safe distance from the work area. Stop using machine if they become a distraction.

GUARDS & COVERS. Guards and covers reduce accidental contact with moving parts or flying debris. Make sure they are properly installed, undamaged, and working correctly BEFORE operating machine.

FORCING MACHINERY. Do not force machine. It will do the job safer and better at the rate for which it was designed.

NEVER STAND ON MACHINE. Serious injury may occur if machine is tipped or if the cutting tool is unintentionally contacted.

STABLE MACHINE. Unexpected movement during operation greatly increases risk of injury or loss of control. Before starting, verify machine is stable and mobile base (if used) is locked.

USE RECOMMENDED ACCESSORIES. Consult this owner's manual or the manufacturer for recommended accessories. Using improper accessories will increase the risk of serious injury.

UNATTENDED OPERATION. To reduce the risk of accidental injury, turn machine ***OFF*** and ensure all moving parts completely stop before walking away. Never leave machine running while unattended.

MAINTAIN WITH CARE. Follow all maintenance instructions and lubrication schedules to keep machine in good working condition. A machine that is improperly maintained could malfunction, leading to serious personal injury or death.

DAMAGED PARTS. Regularly inspect machine for damaged, loose, or mis-adjusted parts—or any condition that could affect safe operation. Immediately repair/replace BEFORE operating machine. For your own safety, DO NOT operate machine with damaged parts!

MAINTAIN POWER CORDS. When disconnecting cord-connected machines from power, grab and pull the plug—NOT the cord. Pulling the cord may damage the wires inside. Do not handle cord/plug with wet hands. Avoid cord damage by keeping it away from heated surfaces, high traffic areas, harsh chemicals, and wet/damp locations.

EXPERIENCING DIFFICULTIES. If at any time you experience difficulties performing the intended operation, stop using the machine! Contact our Technical Support at (570) 546-9663.

Additional Safety for Grinders

⚠WARNING

Serious injury or death can occur from impact injuries if grinding wheel breaks apart during use. Entanglement/amputation injuries can occur from being caught in moving parts or in-running pinch points. Flying sparks can ignite explosive or flammable materials. Rotating grinding wheels can easily remove skin. To minimize risk of getting hurt or killed, anyone operating machine MUST completely heed hazards and warnings below.

SAFE MOUNTING & WORK AREA. An unsecured grinder may become dangerously out of control during operation. Before use, verify grinder is FIRMLY secured in a location free of explosive or flammable materials.

STARTING GRINDER. If a wheel is damaged, it will usually fly apart shortly after start-up. To protect yourself, always stand to side of grinder when turning it ***ON*** and allow it to run for at least one minute before standing in front of it.

VISUAL INSPECTION. Verify that grinding wheels are free of cracks, chips, or dents in wheel surface before installing. Do not use wheel if it has any of these problems or it could break apart during operation.

RING TEST. Perform a "ring test" on grinding wheels before installation to ensure they are safe to use. A wheel that does NOT pass ring test may break or fly apart during operation.

WHEEL SPEED RATING. Wheels operated at a faster speed than rated for may break apart during operation. Before mounting a new wheel, be sure wheel RPM rating is equal or higher than speed of grinder. Never use unmarked wheels or wheel rated for a lower speed than grinder.

VIBRATING WHEEL. Never use a wheel that vibrates. Replace wheel or shaft bearings immediately.

SPARK DEFLECTOR GAP. Keep gap between end of spark deflector and grinding wheel between ⅛" and ¼". If the gap is larger, pinch hazard increases and excessive sparks/abrasives can be expelled toward the operator.

SPINDLE NUT. Only tighten wheel spindle nut enough to drive wheel and prevent slippage.

EYE SHIELDS. Place eye shields close to grinding wheel and re-adjust as wheel wears down.

TOOL REST POSITION. If tool rest is too far away from wheel, workpiece may be pulled down, causing loss of control and pulling your hand into grinding wheel. Keep tool rest within ⅛" from wheel when operating. Replace grinding wheel when tool rest gap is wider than ⅛" and no additional adjustment can be made.

HAND & WHEEL CONTACT. Keep a firm grip on workpiece and position your hands a safe distance away when grinding. Anticipate when workpiece will heat up, and cool it before it becomes too hot to hold, or use an appropriate clamp. Avoid wearing gloves as they may get caught in grinding wheel and cause even more serious entanglement injuries.

WHEEL FLANGES. Only use flanges included with grinder when mounting wheels. Other flanges may not properly secure wheel and cause an accident. Do not use warped or damaged flanges, and always use paper discs (blotters) between wheels and flanges to reduce risk of flanges cracking wheel when tightened.

EYE, FACE, & LUNG PROTECTION. Grinding ejects small particles at a high rate of speed. These particles can cause blindness, skin injuries or respiratory damage. ALWAYS wear approved clothing, safety goggles, face shield, and a respirator for type of grinding to be done.

SIDE & TOP GRINDING. Grinding on side of wheels can cause them to crack and burst—unless wheel is rated for side grinding. Grinding on top of wheels greatly increases risk of workpiece kickback. Always grind on downward part of wheel.

SECTION 2: POWER SUPPLY

Availability

Before installing the machine, consider the availability and proximity of the required power supply circuit. If an existing circuit does not meet the requirements for this machine, a new circuit must be installed. To minimize the risk of electrocution, fire, or equipment damage, installation work and electrical wiring must be done by an electrician or qualified service personnel in accordance with all applicable codes and standards.



⚠WARNING

Electrocution, fire, shock, or equipment damage may occur if machine is not properly grounded and connected to power supply.

Full-Load Current Rating

The full-load current rating is the amperage a machine draws at 100% of the rated output power. On machines with multiple motors, this is the amperage drawn by the largest motor or sum of all motors and electrical devices that might operate at one time during normal operations.

Full-Load Current Rating at 120V .... 4.8 Amps

The full-load current is not the maximum amount of amps that the machine will draw. If the machine is overloaded, it will draw additional amps beyond the full-load rating.

If the machine is overloaded for a sufficient length of time, damage, overheating, or fire may result—especially if connected to an undersized circuit. To reduce the risk of these hazards, avoid overloading the machine during operation and make sure it is connected to a power supply circuit that meets the specified circuit requirements.

⚠WARNING

Serious injury could occur if you connect machine to power before completing setup process. DO NOT connect to power until instructed later in this manual.

120V Circuit Requirements

This machine is prewired to operate on a power supply circuit that has a verified ground and meets the following requirements:

Nominal Voltage 120V
Cycle ..... 60 Hz
Phase ..... Single-Phase
Power Supply Circuit ..... 15 Amps

A power supply circuit includes all electrical equipment between the breaker box or fuse panel in the building and the machine. The power supply circuit used for this machine must be sized to safely handle the full-load current drawn from the machine for an extended period of time. (If this machine is connected to a circuit protected by fuses, use a time delay fuse marked D.)

⚠CAUTION

For your own safety and protection of property, consult an electrician if you are unsure about wiring practices or electrical codes in your area.

Note: *Circuit requirements in this manual apply to a dedicated circuit—where only one machine will be running on the circuit at a time. If machine will be connected to a shared circuit where multiple machines may be running at the same time, consult an electrician or qualified service personnel to ensure circuit is properly sized for safe operation.*

Grounding & Plug Requirements

This machine MUST be grounded. In the event of certain malfunctions or breakdowns, grounding reduces the risk of electric shock by providing a path of least resistance for electric current.

This machine is equipped with a power cord that has an equipment-grounding wire and a grounding plug. Only insert plug into a matching receptacle (outlet) that is properly installed and grounded in accordance with all local codes and ordinances. DO NOT modify the provided plug!

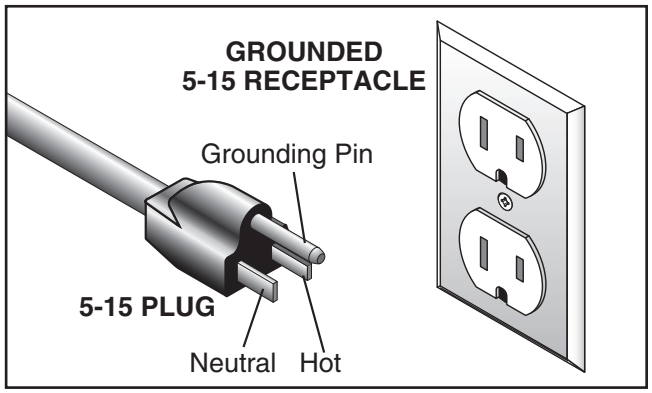

Figure 4. Typical 5-15 plug and receptacle.

⚠CAUTION

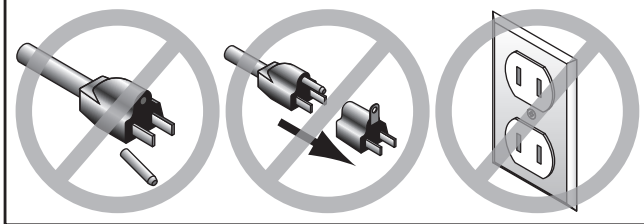

SHOCK HAZARD!

Two-prong outlets do not meet the grounding requirements for this machine. Do not modify or use an adapter on the plug provided—if it will not fit the outlet, have a qualified electrician install the proper outlet with a verified ground.

Improper connection of the equipment-grounding wire can result in a risk of electric shock. The wire with green insulation (with or without yellow stripes) is the equipment-grounding wire. If repair or replacement of the power cord or plug is necessary, do not connect the equipment-grounding wire to a live (current carrying) terminal.

Check with a qualified electrician or service personnel if you do not understand these grounding requirements, or if you are in doubt about whether the machine is properly grounded. If you ever notice that a cord or plug is damaged or worn, disconnect it from power, and immediately replace it with a new one.

Extension Cords

We do not recommend using an extension cord with this machine. If you must use an extension cord, only use it if absolutely necessary and only on a temporary basis.

Extension cords cause voltage drop, which can damage electrical components and shorten motor life. Voltage drop increases as the extension cord size gets longer and the gauge size gets smaller (higher gauge numbers indicate smaller sizes).

Any extension cord used with this machine must be in good condition and contain a ground wire and matching plug/receptacle. Additionally, it must meet the following size requirements:

Minimum Gauge Size.....16 AWG
Maximum Length (Shorter is Better).....50 ft.

SECTION 3: SETUP

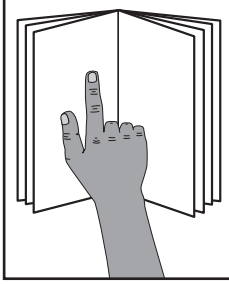

⚠WARNING

This machine presents serious injury hazards to untrained users. Read through this entire manual to become familiar with the controls and operations before starting the machine!



⚠WARNING

Wear safety glasses during the entire setup process!

Needed for Setup

The following are needed to complete the setup process:

Description	Qty
Safety Glasses (for each person)	1
Mounting Hardware (**Page 13**)	As Needed
Fine Ruler	1
Phillips Head Screwdriver #2	1

Unpacking

This machine was carefully packaged for safe transport. When unpacking, separate all enclosed items from packaging materials and inspect them for shipping damage. ***If items are damaged, please call us immediately at (570) 546-9663.***

IMPORTANT: Save all packaging materials until you are completely satisfied with the machine and have resolved any issues between Grizzly or the shipping agent. *You MUST have the original packaging to file a freight claim. It is also extremely helpful if you need to return your machine later.*

Inventory

The following is a list of items shipped with your machine. Before beginning setup, lay these items out and inventory them.

If any non-proprietary parts are missing (e.g. a nut or a washer), we will gladly replace them; or for the sake of expediency, replacements can be obtained at your local hardware store.

NOTICE

If you cannot find an item on this list, carefully check around/inside the machine and packaging materials. Often, these items get lost in packaging materials while unpacking or they are pre-installed at the factory.

Box 1 (Figure 5)	Qty
A. Grinder (Not Shown)	1
B. LED Light Housings/Spark Deflectors	2
C. Safety Shields w/Fasteners	2
D. Tool Rest Bracket (Left)	1
E. Tool Rest Bracket (Right)	1
F. Tool Rest (Left)	1
G. Tool Rest (Right)	1
H. AAA Batteries	4

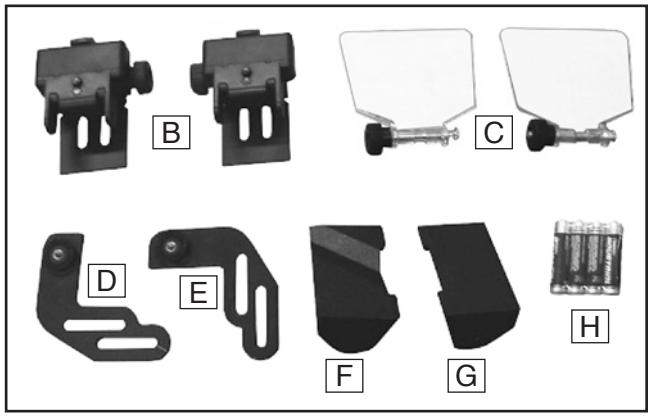

Figure 5. Box 1 inventory.

Fasteners (Figure 6)	Qty
I. Knob Bolts M6-1 x 16	2
J. Flat Washers 6mm	2

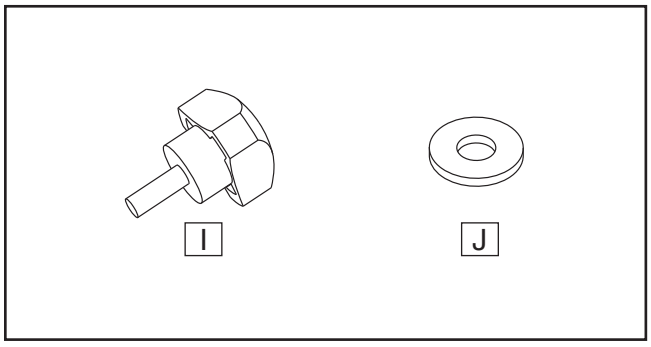

Figure 6. Fastener inventory.

Site Considerations

Workbench Load

Refer to the **Machine Data Sheet** for the weight and footprint specifications of your machine. Some workbenches may require additional reinforcement to support the weight of the machine and workpiece materials.

Placement Location

Consider anticipated workpiece sizes and additional space needed for auxiliary stands, work tables, or other machinery when establishing a location for this machine in the shop. Below is the minimum amount of space needed for the machine.

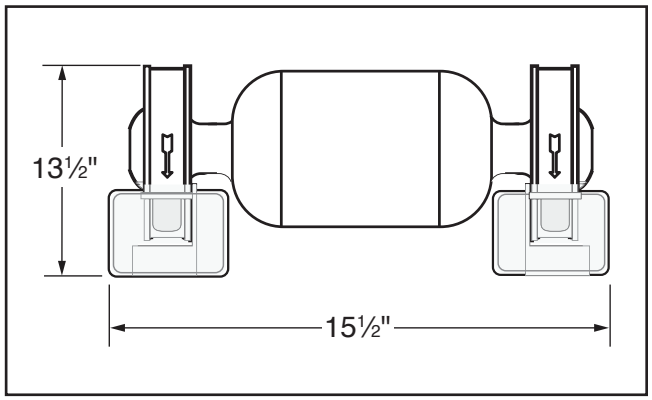

Figure 7. Minimum working clearances.

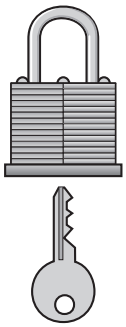

⚠CAUTION

Children and visitors may be seriously injured if unsupervised around this machine. Lock entrances to the shop or disable start switch or power connection to prevent unsupervised use.

Bench Mounting

Number of Mounting Slots 2
Diameter of Mounting Hardware Needed .. ½"

The base of this machine has mounting holes that allow it to be fastened to a workbench or other mounting surface to prevent it from moving during operation and causing accidental injury or damage.

The strongest mounting option is a "Through Mount" (see example below) where holes are drilled all the way through the workbench—and hex bolts, washers, and hex nuts are used to secure the machine in place.

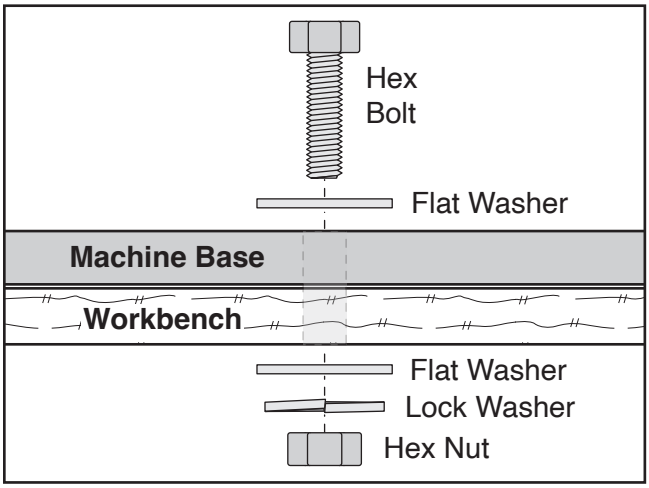

Figure 8. "Through Mount" setup.

Another option is a "direct mount" (see example below) where the machine is secured directly to the workbench with lag screws and washers.

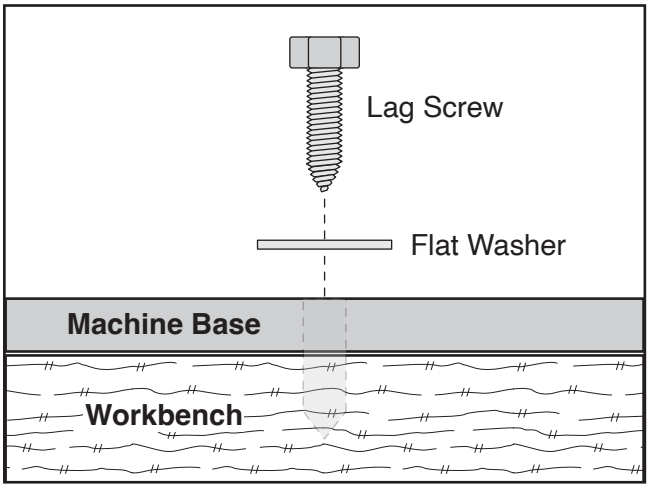

Figure 9. "Direct Mount" setup.

Assembly

The Model G0865 comes mostly assembled from the factory. Using the hardware from the **Inventory** list on **Page 12**, complete the assembly by attaching the tool rest and safety shield.

To assemble grinder:

1. Remove battery cover from each LED light housing and install (2) AAA batteries (see **Figure 10**).

2. Remove (1) pre-installed M5-.8 x 55 carriage bolt and (1) M5-.8 round knob from safety shield, then use to attach safety shield to each LED light housing (see **Figure 10**).

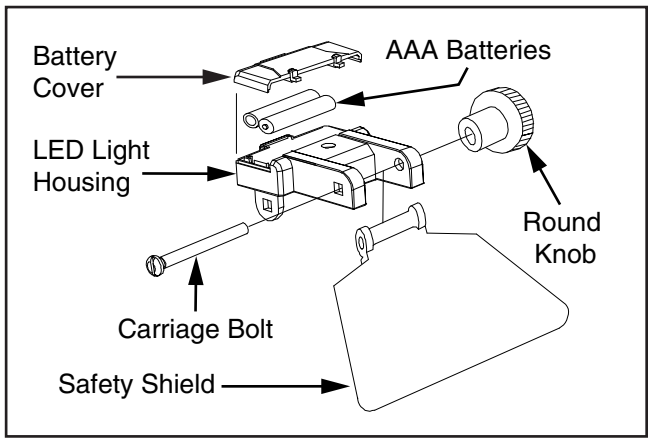

Figure 10. Safety shield/light assembly (1 of 2).

3. Attach each assembled LED light housing/ safety shield to top of wheel guard with (2) pre-installed M5-.8 x 10 Phillips head screws and captive washers (see **Figure 11**).

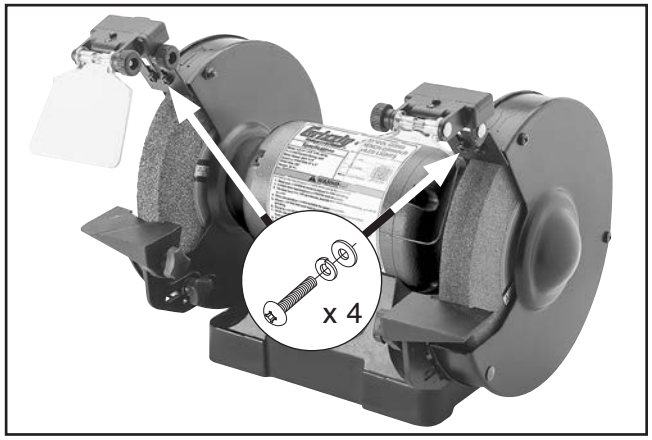

Figure 11. Spark deflector and safety shield attached to grinder.

4. Assemble left tool rest using (1) left tool rest bracket, (1) left tool rest with groove, (1) 6mm flat washer, and (1) M6-1 x 16 knob bolt, as shown in **Figure 12**.

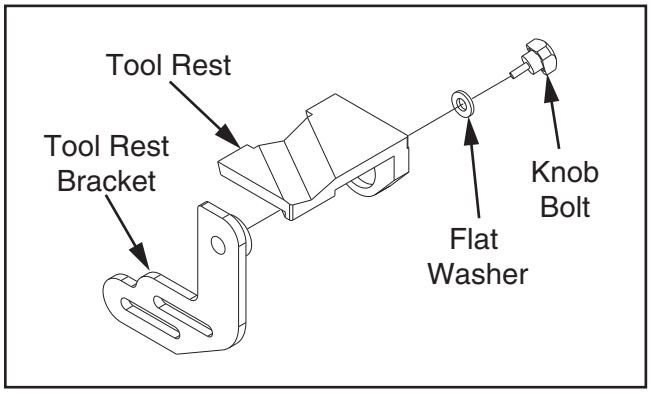

Figure 12. Left tool rest assembly.

5. Assemble right tool rest using (1) right tool rest bracket, (1) right tool rest, (1) 6mm flat washer, and (1) M6-1 x 16 knob bolt.

6. Place bottom slot of tool rest bracket over stud on inner wheel guard, then attach tool rest assembly to inner wheel guard using (1) pre-installed M5-.8 x 50 carriage bolt, 5mm fender washer, 5mm lock washer, and M5-.8 knob (see **Figure 13**). Repeat for second tool rest assembly.

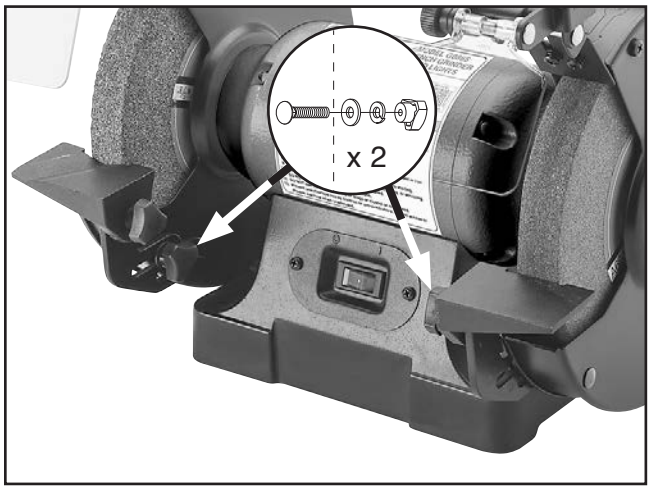

Figure 13. Tool rest assemblies attached to inner wheel guard.

⚠CAUTION

***NEVER* grind without tool rest in place and properly positioned. "Freehand" grinding or too large of a gap between wheel and tool rest increases risk of kickback, which may lead to serious injury.**

Tool Rest Adjustment

The tool rest stabilizes the workpiece when grinding. It must always be positioned correctly when using the grinder, to avoid workpiece and possibly operator's hands from being pulled into grinding wheel.

ALWAYS DISCONNECT POWER BEFORE MAKING ADJUSTMENTS!

As the grinding wheel wears, adjust the tool rest closer to the grinding wheel to maintain a gap of 1/16" – 1/8" (see **Figure 14**). If the gap reaches 1/8" and no additional adjustments can be made, replace the grinding wheel.

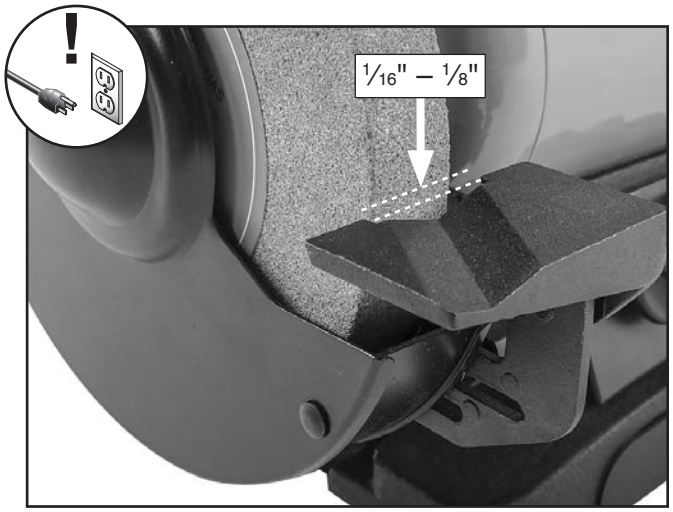

Figure 14. Example of correct tool rest gap.

Spark Deflector Adjustment

The spark deflector prevents sparks from showering the top of the workpiece and the operator's hands.

ALWAYS DISCONNECT POWER BEFORE MAKING ADJUSTMENTS!

As the wheel wears, adjust the spark deflector closer to the grinding wheel to maintain a gap of 1/8" – 1/4" (see **Figure 15**). If the gap reaches 1/4" and no additional adjustments can be made, replace the grinding wheel.

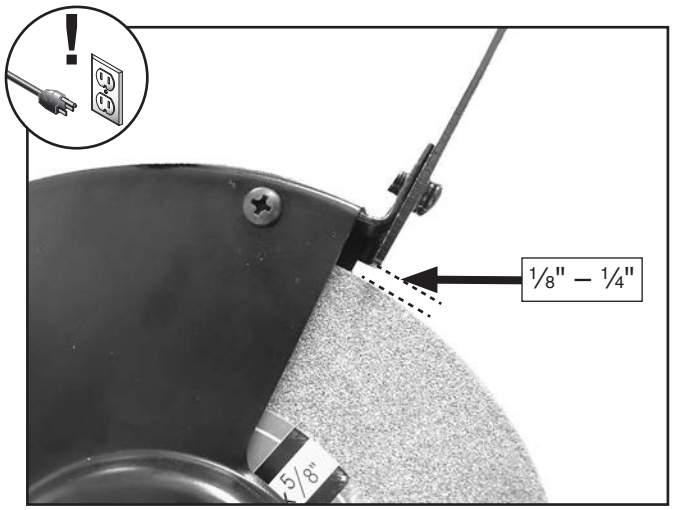

Figure 15. Example of correct spark deflector gap.

NOTICE

Some grinding wheels must be replaced before spark deflector or tool rest reach their final adjustment. As diameter of a grinding wheel is reduced, so is available surface speed. Grinding under these conditions can lead to faster abrasive loss and poor grinding results. Always follow wheel manufacturer's directions.

Test Run

Once assembly is complete, test run the machine to ensure it is properly connected to power and safety components are functioning correctly.

If you find an unusual problem during the test run, immediately stop the machine, disconnect it from power, and fix the problem BEFORE operating the machine again. The **Troubleshooting** table in the **SERVICE** section of this manual can help.

The Test Run consists of verifying the following: 1) The motor powers up and runs correctly.

⚠WARNING

Serious injury or death can result from using this machine BEFORE understanding its controls and related safety information. DO NOT operate, or allow others to operate, machine until the information is understood.

⚠WARNING

DO NOT start machine until all preceding setup instructions have been performed. Operating an improperly set up machine may result in malfunction or unexpected results that can lead to serious injury, death, or machine/property damage.

To test run machine:

1. Clear all setup tools away from machine.
2. Connect machine to power supply.
3. Turn machine ***ON***, verify motor operation, and then turn machine ***OFF***.

   The motor should run smoothly and without problems or unusual noises.

SECTION 4: OPERATIONS

Operation Overview

The purpose of this overview is to provide the novice machine operator with a basic understanding of how the machine is used during operation, so the machine controls/components discussed later in this manual are easier to understand.

Due to the generic nature of this overview, it is **not** intended to be an instructional guide. To learn more about specific operations, read this entire manual, seek additional training from experienced machine operators, and do additional research outside of this manual by reading "how-to" books, trade magazines, or websites.

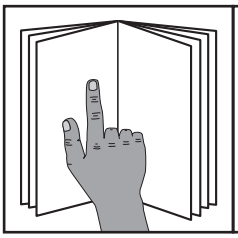

⚠WARNING

To reduce your risk of serious injury, read this entire manual BEFORE using machine.

⚠WARNING

Eye and face injuries and respiratory problems can occur while operating this tool. Wear personal protective equipment to reduce your risk from these hazards.



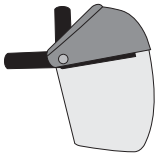



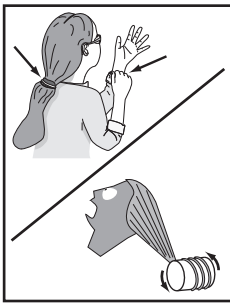

⚠WARNING

Keep hair, clothing, and jewelry away from moving parts at all times. Entanglement can result in death, amputation, or severe crushing injuries!

To complete a typical operation, the operator does the following:

1. Examines workpiece to make sure it is suitable for grinding.
2. Selects correct grinding wheel for type of workpiece grinding, inspects wheel, performs a "ring test," and installs wheel.
3. Verifies/adjusts tool rest position so it is perpendicular to grinding wheel and gap is 1/16" to 1/8", and verifies/adjusts spark deflector and wheel gap is between 1/8" to 1/4".
4. Positions safety shield for safe grinding.
5. Ensures that ON/OFF switch is in ***OFF*** position, and connects grinder to power.
6. Puts on personal protective equipment.
7. Stands aside, starts grinder, and allows wheel to reach full speed and operate for at least 1 minute to ensure wheel does not fly apart from the centrifugal force of rotation.
8. Places workpiece on tool rest and positions it for grinding.
9. Gradually feeds workpiece into grinding wheel and moves workpiece left and right to prevent grooves in wheel.
10. Quenches workpiece as required to prevent surface hardening or temper loss.
11. Stops bench grinder.

NOTICE

If you are not experienced with this type of machine, WE STRONGLY RECOMMEND that you seek additional training outside of this manual. Read books/magazines or get formal training before beginning any projects. Regardless of the content in this section, Grizzly Industrial will not be held liable for accidents caused by lack of training.

Workpiece Inspection

Some workpieces are not suitable for grinding on a bench grinder. **Before grinding, inspect all workpieces for the following:**

- ***Hard Workpiece:*** Workpieces that are made of stone, carbide, stainless steel, ceramics, glass, or have hardened welds will wear out most general-grade grinding wheels quickly. If hard materials are to be ground, you must install the correct type of grinding wheel.

- ***Soft Workpiece:*** Workpieces that are made of aluminum, brass, lead, and other nonferrous metals will load up in the grinding wheel and render the abrasive useless. Grinding wood, plastics, rubber, fiberglass, or other soft materials can also cause the same problem and lead to the wheel overheating and possibly bursting during use if ignored. To restore a loaded grinding wheel surface, redress with a dressing tool.

- ***Flexible/Unstable Workpiece:*** Grinding on the side or the ends of cable, chain, or round workpieces creates the hazard of workpiece twist or grab, leading to entanglement with the wheel or shaft. This hazard must be avoided.

- ***Loose Parts:*** Make sure that the workpiece is free of any parts like springs, pins, balls, or other components that may loosen or dislodge during grinding, and hit the operator.

- ***Strength:*** Make sure that the workpiece is strong enough to be ground. Should it break, the broken piece may dig into the wheel and cause kickback or severe injury.

⚠WARNING

Electrical system is not waterproof. DO NOT use grinder with liquid cooling system for wet grinding. Ignoring warning can lead to electrocution or machine damage.

Wheel Selection

The Model G0865 only accepts Type 1 wheels with a 5/8" bore.

Aluminum oxide and silicon carbide wheels are marked in a somewhat uniform manner by all the major manufacturers. Understanding these markings will help you understand the capabilities of various wheels. Always refer to the manufacturer's grinding recommendations when selecting a wheel for your project.

The basic format for wheel numbering is:

Prefix	Abrasive Type	Grit Size	Grade	Bond Type
1	A	60	L	V

The **Prefix** is the manufacturer's designation for a particular wheel type (e.g. Type 1 wheels).

The most common **Abrasive Types** used are A for Aluminum Oxide, C for Silicon Carbide, and occasionally SG for Seeded Gel.

The **Grit Size** is a number that refers to the size of the abrasive grain in the wheel. The lower the number, the coarser the wheel. Ten is a very coarse wheel for roughing and 220 is usually the upper range for fine finish work.

Grade is an indication of the hardness of the wheel—"A" being the softest and "Z" being the hardest.

Bond Type refers to the type of bonding material used to hold the abrasive material. Most general purpose wheels will have a "V" indicating Vitrified Clay is used. Vitrified Clay provides high strength and good porosity. The other common bond type is "B" for resin where synthetic resins are used. These are used to grind cemented carbide and ceramic materials.

Note: *There may be other numbers inserted that have meaning for a particular type of wheel. Refer to the manufacturer's technical data for a complete explanation.*

Wheel Care

When grinding, your safety depends, to a large degree, on the condition of the wheel. A wheel in poor condition presents the possibility of breaking apart during rotation and injuring the operator and others in the area.

Here are some tips to help you avoid breaking the wheel:

- Always transport, store and handle wheels with care. Wheels may be damaged if they are dropped or if heavy objects are stacked on them.
- Select the right grinding wheel for the job. DO NOT grind material inappropriate for the wheel type.
- Only use wheels that are rated for the RPM of the tool grinder.
- Mount the wheel properly (see **Wheel Removal & Installation** on **Page 20**).
- Do not push the tooling into the grinding wheel with such force that it causes the grinder to bog down. And do not apply pressure to stop the wheel after turning the grinder ***OFF***.
- Dress the wheel when necessary. Do not allow it to become glazed (see **Wheel Dressing** on **Page 20**).
- Do not store wheels in damp or wet locations.
- Do not overtighten the nut when mounting the wheel.
- Do not leave the wheel mounted when machine is not in use.

Wheel Inspection

Before mounting a new grinding wheel, it must be inspected. Do not assume that a wheel is in sound condition just because it is new—often damage can occur in shipping, with age, or with exposure to moisture.

First, do a **Visual Inspection**. Look for any cracks, chips, nicks or dents in the surface of the wheel. If you see any of these, DO NOT use the wheel.

Second, do a **Ring Test**. This test will give you an indication of any internal damage that may not be obvious during a visual inspection.

To perform ring test:

1. Make sure grinding wheel is clean and dry; otherwise, you may get false results.
2. If size permits, balance grinding wheel with a screw driver through mounting hole. If this is not possible, hang wheel in air with a piece of cord or string looped through mounting hole in center.
3. At spots shown in **Figure 16**, gently tap grinding wheel with a light non-metallic device such as handle of a screwdriver or a wooden mallet.

   Note: *Finding exact spot to tap may take several attempts.*

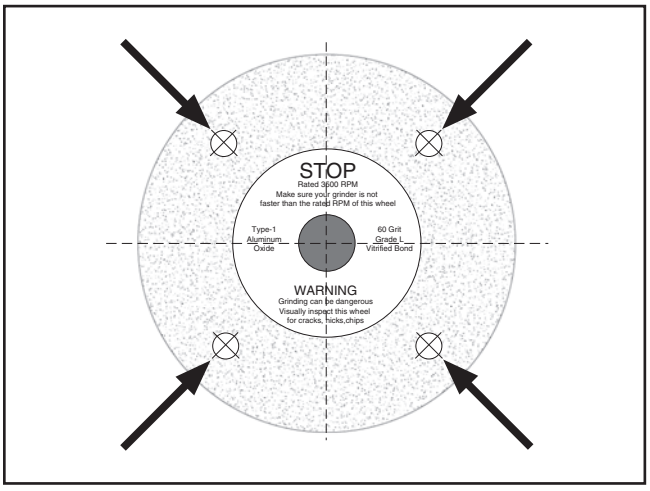

Figure 16. Tapping locations when performing a ring test.

4. An undamaged grinding wheel will emit a clear metallic ring or "ping" sound in each of these spots. A damaged grinding wheel will respond with a dull thud that has no clear tone.

   — If you determine from ring test that grinding wheel is damaged, DO NOT use it!

Wheel Dressing

Depending on the type of grinding you do, the grinding wheel may require periodic dressing.

There are several different types of wheel dressing devices available on the market (see **Page 22** for examples). Dressing restores the abrasive quality of the wheel surface and brings the wheel edge back to a square form.

Refer to the instructions that accompany your dressing accessory for complete details on how to properly dress the wheel.

⚠CAUTION

Always adjust tool rest and spark deflector after dressing or replacing grinding wheel. Failure to do so could lead to workpiece kickback and injury.

Wheel Removal & Installation

⚠CAUTION

ALWAYS visually inspect and perform a "ring test" on a wheel before assembly. DO NOT use damaged wheels!

To remove and install grinding wheel:

1. DISCONNECT MACHINE FROM POWER!

2. Remove outer guard (see **Figure 17**).

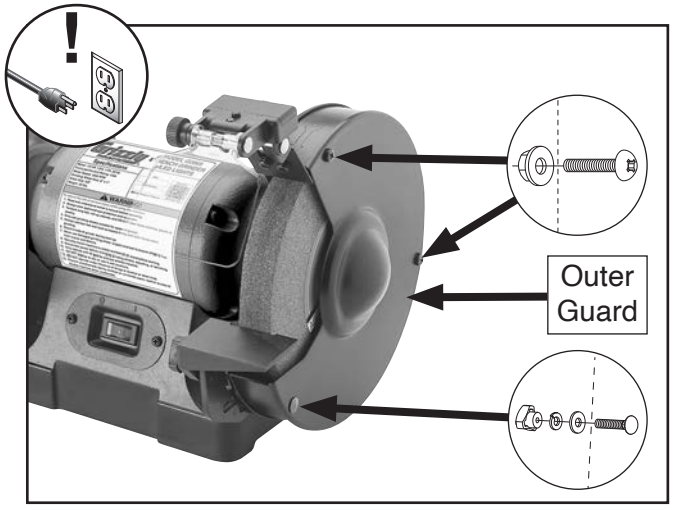

Figure 17. Location of outer guard hardware that must be removed to remove wheel.

3. Remove arbor hex nut (see **Figure 18**).

   Tip: *Hold grinding wheel with free hand to stop it from turning while loosening the arbor nut.*

   Note: *Spindle on left side of grinder has left-hand threads. Turn it clockwise to loosen.*

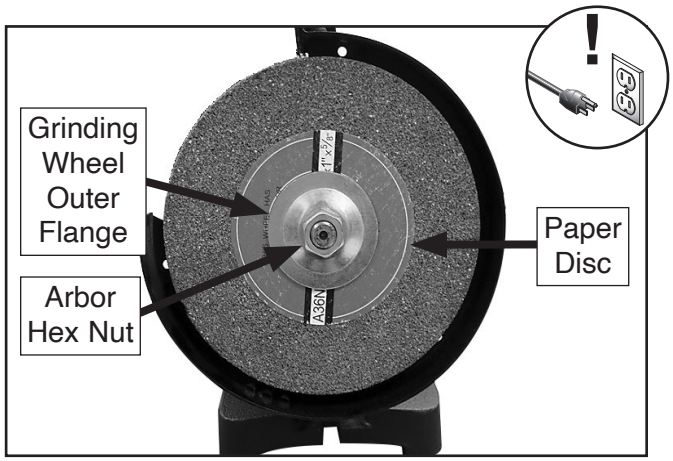

Figure 18. Outer wheel guard removed.

4. Remove grinding wheel outer flange and paper disc.

5. Remove grinding wheel from spindle.

   Note: *Mark location of paper or fiber disc between wheel flanges and wheel. These cushion the pressure of the wheel flanges and help distribute pressure more evenly. They also help reduce damage to the arbor flanges.*

6. Verify flatness of inner and outer wheel flanges by placing them on a level surface. Replace warped or damaged flanges.

⚠CAUTION

Warped wheel flanges can contribute to grinding wheel breaking and flying apart. Never use warped wheel flanges. Always check flanges before re-installing grinding wheel.

⚠CAUTION

NEVER assemble grinding wheel on spindle without paper or fiber discs between wheel and flange. Not using discs can put stress on wheel, causing it to crack and possibly fly apart.

7. Mount new grinding wheel in order shown in **Figure 19**. Tighten arbor hex nut snugly but do not over-tighten. Over-tightening can stress and crack wheel.

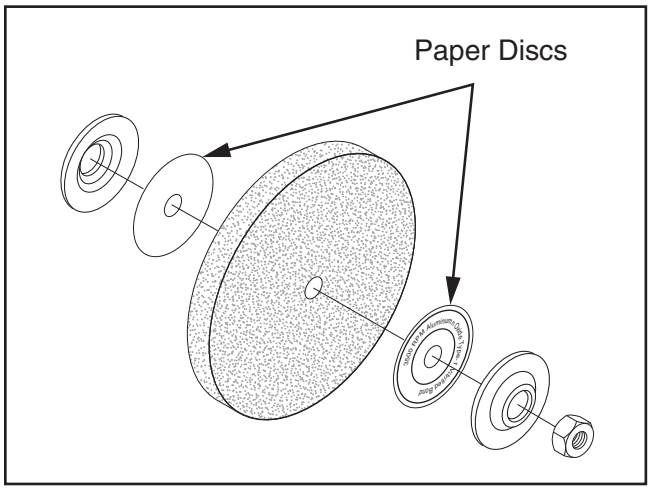

Figure 19. Assembly order for wheel installation.

8. Re-assemble outer wheel guard using hardware removed in **Step 2**.

9. While standing away from line of rotation, turn grinder ***ON*** and run new grinding wheel for at least 1–2 minutes before standing in front of it. This helps protect you if the wheel has internal damage that will cause it to fly apart from the centrifugal force of rotation.

   — If grinder runs smoothly, grinding wheel may now be used.

   — If wheel appears to wobble, grinder vibrates excessively, or any other unsafe condition appears with new wheel, stop grinder and refer to **Troubleshooting** on **Page 24**.

SECTION 5: MAINTENANCE

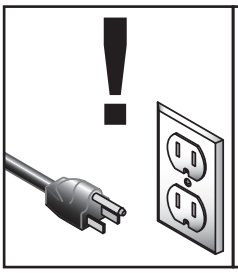

⚠WARNING
To reduce risk of shock or accidental startup, always disconnect machine from power before adjustments, maintenance, or service.

Schedule

For optimum performance from this machine, this maintenance schedule must be strictly followed.

Ongoing
To minimize your risk of injury and maintain proper machine operation, shut down the machine immediately if you ever observe any of the items below, and fix the problem before continuing operations:

- Loose mounting bolts.
- Cracked or loose grinding wheel.
- Worn or damaged wires.
- Any other unsafe condition.

Grinding Wheels

The grinding wheels should be inspected before every use. Use the ring test method noted in **Wheel Inspection** on **Page 19** to verify structural integrity. Take care in storing grinding wheels to keep them free from potential damage by being dropped or having other items drop on them.

Replace the wheel when the spark deflector or tool rest has no more adjustment and the gap has exceeded the safe limit.

Cleaning & Protecting

Cleaning the Model G0865 is relatively easy. Vacuum excess debris, and wipe off the remaining dust with a dry cloth.

Wheel Dressing

Depending on the type of grinding you do, the grinding wheel may require periodic dressing.

Several different kinds of wheel dressing devices are available. Dressing restores the abrasive quality of the wheel surface and squares up the wheel edge.

Refer to the instructions that accompany your dressing accessory for complete details on how to properly dress a wheel.

Wheel Storage

Grinding wheels can be easily damaged, so it is important to store them properly. Follow all wheel manufacturer storage instructions. Always store grinding wheels in a location that is dry and protected from potential damage due to them being dropped or having other items dropped on them. Avoid storing grinding wheels where there is high humidity, extreme heat or cold, or solvents.

SECTION 6: SERVICE

Review the troubleshooting procedures in this section if a problem develops with your machine. If you need replacement parts or additional help with a procedure, call our Technical Support. **Note:** *Please gather the serial number and manufacture date of your machine before calling.*

Troubleshooting

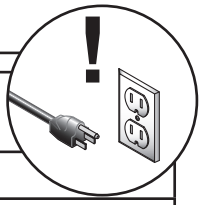

Motor & Electrical

Symptom	Possible Cause	Possible Solution
Machine does not start, or power-supply fuse/breaker trips immediately after startup.	1. Incorrect power supply voltage or circuit size. 2. Power supply circuit breaker tripped or fuse blown. 3. Motor at fault.	1. Ensure correct power supply voltage and circuit size. 2. Ensure circuit is sized correctly and free of shorts. Reset circuit breaker or replace fuse. 3. Replace motor.
Machine stalls or is underpowered.	1. Machine undersized for task. 2. Motor overheated. 3. Motor or bearings at fault.	1. Use new grinding/buffing wheel; reduce feed rate. 2. Clean motor, let cool, and reduce workload. 3. Replace motor.
Machine has vibration or noisy operation.	1. Motor or component loose. 2. Machine incorrectly mounted to workbench or stand. 3. Grinding wheel at fault/arbor hole not round. 4. Motor bearings at fault. 5. Motor shaft bent.	1. Inspect/replace damaged parts, or tighten if loose. 2. Tighten mounting hardware. 3. Dress/replace grinding wheel. 4. Test by rotating shaft; rotational grinding/loose shaft requires bearing replacement. 5. Test with dial indicator and replace motor.

Operations

Symptom	Possible Cause	Possible Solution
Machine slows when operating.	1. Operator applying too much pressure.	1. Use less pressure when grinding.
Wavy condition on surface of workpiece.	1. Machine vibrating. 2. Workpiece not held firmly. 3. Wheel face uneven. 4. Wheel is too hard.	1. Securely mount on solid surface (**Page 13**). 2. Use a holding device to firmly hold the workpiece. 3. Dress grinding wheel (**Page 20**). 4. Use softer wheel, or reduce feed rate.
Lines on surface of workpiece.	1. Wheel surface loaded with residue. 2. Workpiece not held tightly.	1. Dress grinding wheel (**Page 20**). 2. Use holding device to firmly hold workpiece.
Burning spots or cracks in the workpiece.	1. Improper type of grinding wheel. 2. Improper feed rate. 3. Workpiece requires quenching.	1. Try softer style wheel or a wheel with coarser grit. 2. Slow down rate of workpiece movement into wheel. 3. Quench workpiece in water to cool.
Wheel dulls quickly, grit falls off.	1. Depth of cut too great. 2. Wheel is too soft. 3. Wheel diameter too small. 4. Bad wheel dress. 5. Defective wheel bonding.	1. Slow down rate of workpiece movement into wheel. 2. Wheel too soft for material being ground, select harder bond. 3. Replace grinding wheel (**Page 20**). 4. Dress grinding wheel (**Page 20**). 5. Consult manufacturer of grinding wheel.

SECTION 7: WIRING

These pages are current at the time of printing. However, in the spirit of improvement, we may make changes to the electrical systems of future machines. Compare the manufacture date of your machine to the one stated in this manual, and study this section carefully.

If there are differences between your machine and what is shown in this section, call Technical Support at (570) 546-9663 for assistance BEFORE making any changes to the wiring on your machine. An updated wiring diagram may be available. **Note:** *Please gather the serial number and manufacture date of your machine before calling. This information can be found on the main machine label.*

⚠WARNING
Wiring Safety Instructions

SHOCK HAZARD. Working on wiring that is connected to a power source is extremely dangerous. Touching electrified parts will result in personal injury including but not limited to severe burns, electrocution, or death. Disconnect the power from the machine before servicing electrical components!

MODIFICATIONS. Modifying the wiring beyond what is shown in the diagram may lead to unpredictable results, including serious injury or fire. This includes the installation of unapproved aftermarket parts.

WIRE CONNECTIONS. All connections must be tight to prevent wires from loosening during machine operation. Double-check all wires disconnected or connected during any wiring task to ensure tight connections.

CIRCUIT REQUIREMENTS. You MUST follow the requirements at the beginning of this manual when connecting your machine to a power source.

WIRE/COMPONENT DAMAGE. Damaged wires or components increase the risk of serious personal injury, fire, or machine damage. If you notice that any wires or components are damaged while performing a wiring task, replace those wires or components.

MOTOR WIRING. The motor wiring shown in these diagrams is current at the time of printing but may not match your machine. If you find this to be the case, use the wiring diagram inside the motor junction box.

CAPACITORS/INVERTERS. Some capacitors and power inverters store an electrical charge for up to 10 minutes after being disconnected from the power source. To reduce the risk of being shocked, wait at least this long before working on capacitors.

EXPERIENCING DIFFICULTIES. If you are experiencing difficulties understanding the information included in this section, contact our Technical Support at (570) 546-9663.

NOTICE

The photos and diagrams included in this section are best viewed in color. You can view these pages in color at www.grizzly.com.

COLOR KEY

BLACK	Bk	BLUE	Bl	YELLOW	Yl	LIGHT BLUE	Lb
WHITE	Wt	BROWN	Br	YELLOW GREEN	Yg	BLUE WHITE	Bw
GREEN	Gn	GRAY	Gy	PURPLE	Pu	TURQUOISE	Tu
RED	Rd	ORANGE	Or	PINK	Pk		

Wiring Diagram

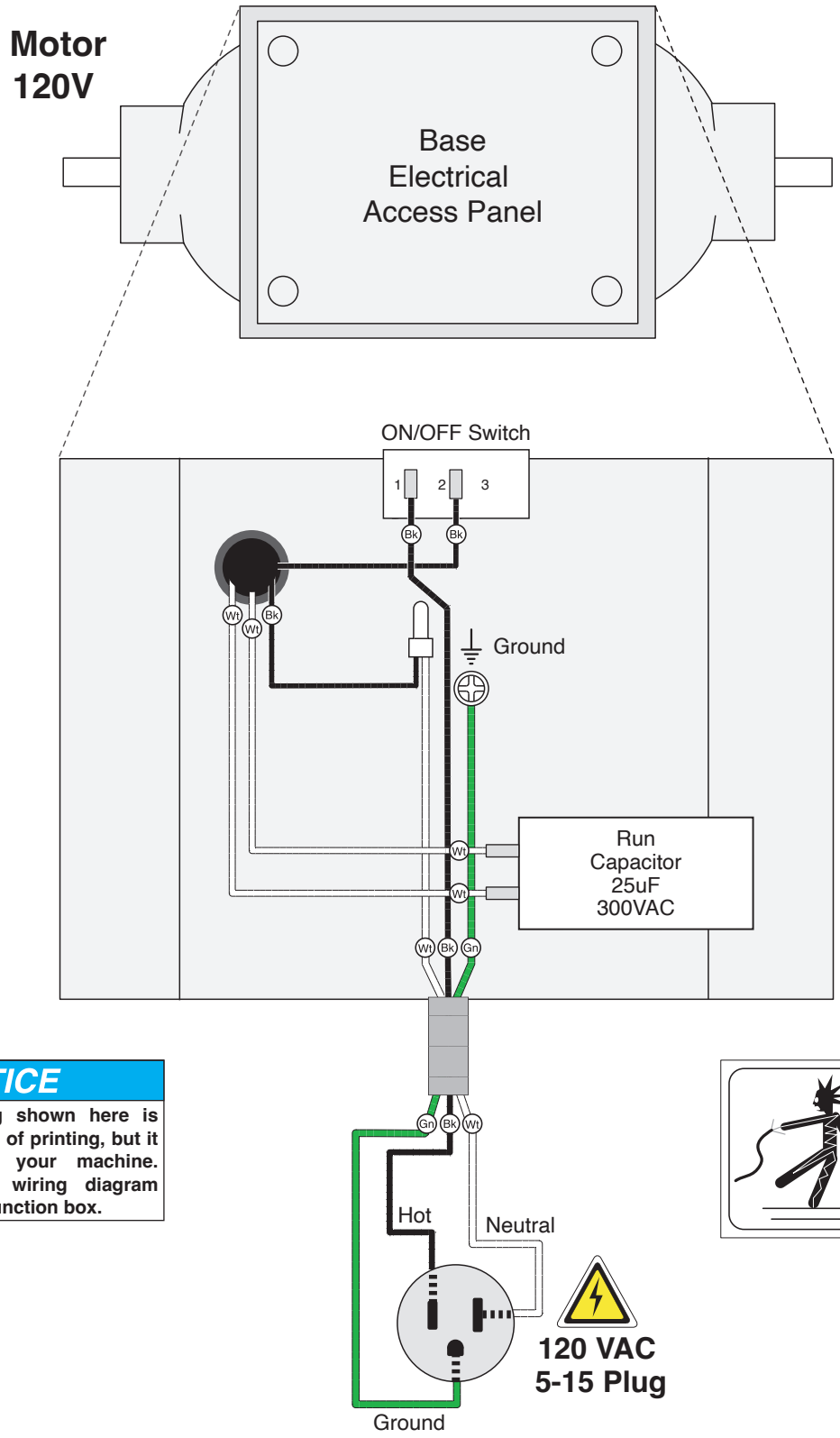

NOTICE

The motor wiring shown here is current at the time of printing, but it may not match your machine. Always use the wiring diagram inside the motor junction box.



READ ELECTRICAL SAFETY ON PAGE 25!

SECTION 8: PARTS

We do our best to stock replacement parts when possible, but we cannot guarantee that all parts shown are available for purchase. Call **(800) 523-4777** or visit **www.grizzly.com/parts** to check for availability.

Main

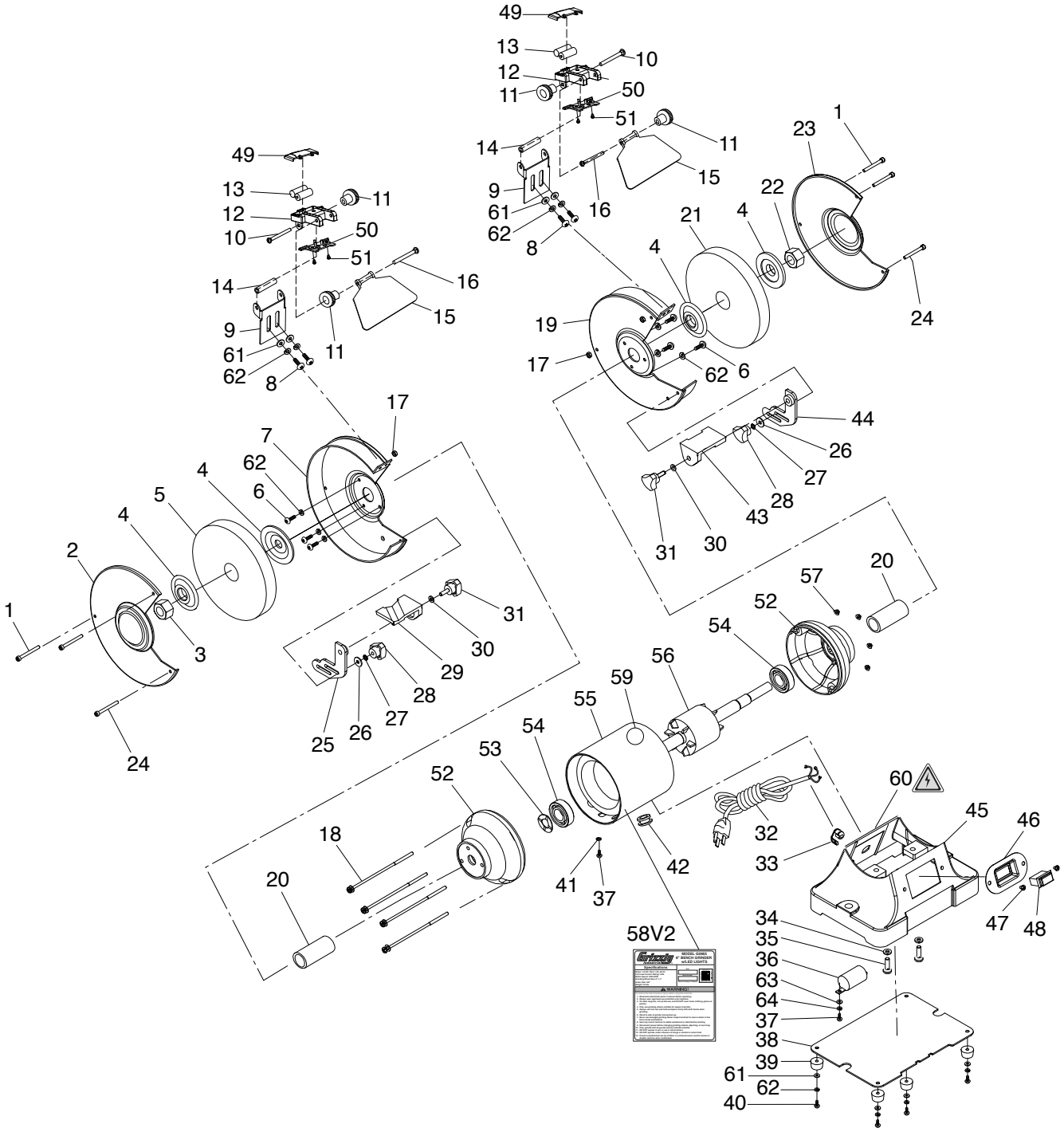

BUY PARTS ONLINE AT GRIZZLY.COM!
Scan QR code to visit our Parts Store.

Main Parts List

REF	PART #	DESCRIPTION
1	P0865001	PHLP HD SCR M5-.8 X 50 BLK
2	P0865002	WHEEL GUARD (OUTER, LEFT)
3	P0865003	HEX NUT M16-2 LH
4	P0865004	GRINDING WHEEL FLANGE 5/8
5	P0865005	GRINDING WHEEL 8" X 1" X 5/8" 60G
6	P0865006	PHLP HD SCR M5-.8 X 10
7	P0865007	WHEEL GUARD (INNER, LEFT)
8	P0865008	PHLP HD SCR M5-.8 X 10 BLK
9	P0865009	SPARK DEFLECTOR
10	P0865010	CARRIAGE BOLT M5-.8 X 60
11	P0865011	KNOB M5-.8, D20, ROUND KN
12	P0865012	LED LIGHT HOUSING
13	P0865013	BATTERY AAA 1.5V
14	P0865014	SPACER 5 X 8 X 42MM
15	P0865015	SAFETY SHIELD
16	P0865016	CARRIAGE BOLT M5-.8 X 55
17	P0865017	FLANGE NUT M5-.8 BLK
18	P0865018	PHLP HD SCR M5-.8 X 155 BLK
19	P0865019	WHEEL GUARD (INNER, RIGHT)
20	P0865020	SHAFT SLEEVE
21	P0865021	GRINDING WHEEL 8" X 1" X 5/8" 36G
22	P0865022	HEX NUT M16-2
23	P0865023	WHEEL GUARD (OUTER, RIGHT)
24	P0865024	CARRIAGE BOLT M5-.8 X 50 BLK
25	P0865025	TOOL REST BRACKET (LEFT)
26	P0865026	FENDER WASHER 5MM BLK
27	P0865027	LOCK WASHER 5MM BLK
28	P0865028	KNOB 3-LOBE, M5-.8, D25,
29	P0865029	TOOL REST (LEFT)
30	P0865030	FLAT WASHER 6MM BLK
31	P0865031	KNOB BOLT 3-LOBE, M6-1 X 16, D25
32	P0865032	POWER CORD 18G 3W 78" 5-15P

REF	PART #	DESCRIPTION
33	P0865033	STRAIN RELIEF TYPE-1 1/2
34	P0865034	LOCK WASHER 8MM
35	P0865035	HEX BOLT M8-1.25 X 20
36	P0865036	R CAPACITOR 25M 300V 1-1/2 X 3
37	P0865037	PHLP HD SCR M4-.7 X 8
38	P0865038	GRINDER BASE PLATE
39	P0865039	FOOT (RUBBER)
40	P0865040	PHLP HD SCR M5-.8 X 16
41	P0865041	EXT TOOTH WASHER 4MM
42	P0865042	GROMMET 10MM (RUBBER)
43	P0865043	TOOL REST (RIGHT)
44	P0865044	TOOL REST BRACKET (RIGHT)
45	P0865045	GRINDER BASE
46	P0865046	SWITCH PLATE
47	P0865047	PHLP HD SCR M4-.7 X 8 BLK
48	P0865048	ON/OFF SWITCH RF1001 T85
49	P0865049	BATTERY COVER
50	P0865050	LED COVER
51	P0865051	TAP SCREW M3 X 8
52	P0865052	MOTOR END CAP
53	P0865053	WAVY WASHER 40MM
54	P0865054	BALL BEARING 6203ZZ
55	P0865055	STATOR
56	P0865056	ROTOR
57	P0865057	FLANGE NUT M5-.8 BLK
58V2	P0865058V2	MACHINE ID LABEL V2.09.25
59	P0865059	TOUCH-UP PAINT, GRIZZLY GREEN
60	P0865060	ELECTRICITY LABEL
61	P0865061	FLAT WASHER 5MM
62	P0865062	LOCK WASHER 5MM
63	P0865063	FLAT WASHER 4MM
64	P0865064	LOCK WASHER 4MM

⚠WARNING

Safety labels help reduce the risk of serious injury caused by machine hazards. If any label comes off or becomes unreadable, the owner of this machine MUST replace it in the original location before resuming operations. For replacements, contact (800) 523-4777 or www.grizzly.com.

BUY PARTS ONLINE AT GRIZZLY.COM!
Scan QR code to visit our Parts Store.

WARRANTY & RETURNS

Grizzly Industrial, Inc. warrants every product it sells for a period of **1 year** to the original purchaser from the date of purchase. This warranty does not apply to defects due directly or indirectly to misuse, abuse, negligence, accidents, repairs or alterations or lack of maintenance. This is Grizzly's sole written warranty and any and all warranties that may be implied by law, including any merchantability or fitness, for any particular purpose, are hereby limited to the duration of this written warranty. We do not warrant or represent that the merchandise complies with the provisions of any law or acts unless the manufacturer so warrants. In no event shall Grizzly's liability under this warranty exceed the purchase price paid for the product and any legal actions brought against Grizzly shall be tried in the State of Washington, County of Whatcom.

We shall in no event be liable for death, injuries to persons or property or for incidental, contingent, special, or consequential damages arising from the use of our products.

The manufacturers reserve the right to change specifications at any time because they constantly strive to achieve better quality equipment. We make every effort to ensure that our products meet high quality and durability standards and we hope you never need to use this warranty.

In the event you need to use this warranty, contact us by mail or phone and give us all the details. We will then issue you a "Return Number," which must be clearly posted on the outside as well as the inside of the carton. We will not accept any item back without this number. Proof of purchase must accompany the merchandise.

Please feel free to write or call us if you have any questions about the machine or the manual.

Thank you again for your business and continued support. We hope to serve you again soon.

For further information about the warranty, visit **https://www.grizzly.com/forms/warranty** or scan the QR code below to be automatically directed to our warranty page.



grizzly.com®

TOOL WEBSITE

Buy Direct and Save with Grizzly® – Trusted, Proven and a Great Value!

~Since 1983~

Visit Our Website Today For Current Specials!

ORDER

24 HOURS A DAY!

1-800-523-4777

