READ THIS FIRST

Model G0855/G0856

IMPORTANT UPDATE

For Machines Mfd. Since 07/23
and Owner's Manual Revised 05/21

For questions or help with this product contact Tech Support at (570) 546-9663 or techsupport@grizzly.com

The following changes were recently made since the owner's manual was printed:

- Inventory has changed.
- Assembly steps have changed.
- Accessories have changed.

Aside from this information, all other content in the owner's manual applies and MUST be read and understood for your own safety. **IMPORTANT: Keep this update with the owner's manual for future reference.**

For questions or help, contact our Tech Support at (570) 546-9663 or techsupport@grizzly.com.

Revised Inventory

Additional Loose Items (Figure 1)	Qty
T. Open-End Wrench 14/17mm	1
U. Hex Nuts M8-1.25	2
V. Lock Nuts ⅜"-16	4
W. Wheel Axles ⅜"-16 x 1 3/16", 2½"L	4
X. Wheels	4
Y. Mobile Base Lock Knobs	2
Z. Adjustable Feet M8-1.25	2

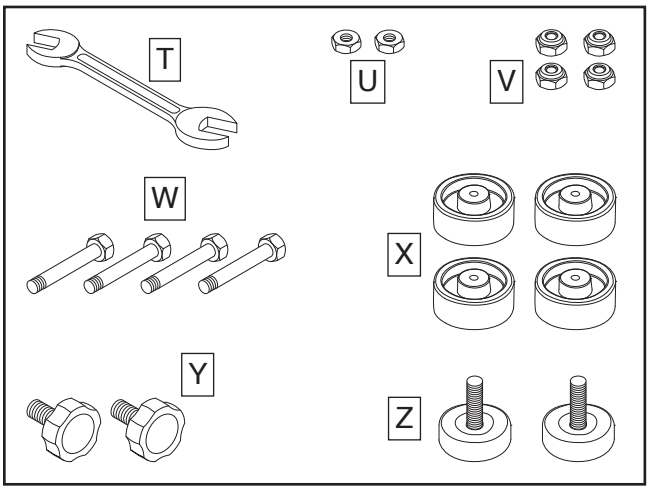

Figure 1. Additional loose items inventory.

C US
175370

COPYRIGHT © JULY, 2023 BY GRIZZLY INDUSTRIAL, INC.
WARNING: NO PORTION OF THIS MANUAL MAY BE REPRODUCED IN ANY SHAPE OR FORM WITHOUT THE WRITTEN APPROVAL OF GRIZZLY INDUSTRIAL, INC.
#KS22784 PRINTED IN TAIWAN

Revised Assembly

The steps in these instructions replace **Steps 1–16** of **Assembly** in the owner's manual. Perform the following steps, then proceed with **Steps 17–25** of **Assembly** on **Page 22** of the owner's manual.

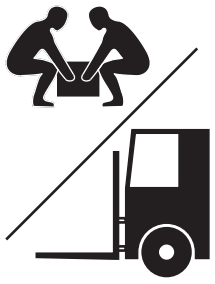

⚠WARNING

HEAVY LIFT!

Straining or crushing injury may occur from improperly lifting machine or some of its parts. To reduce this risk, get help from other people and use a forklift (or other lifting equipment) rated for weight of this machine.

To assemble machine:

1. Open cardboard box and remove all loose items from stand interior.

2. With help from an additional person, remove stand, then turn stand upside down and place on top of a flat, even surface.

3. Install (4) wheels to stand mounting brackets using (4) ⅜"-16 x 1 3/16", 2½"L wheel axles and (4) ⅜"-16 lock nuts (see **Figure 2**).

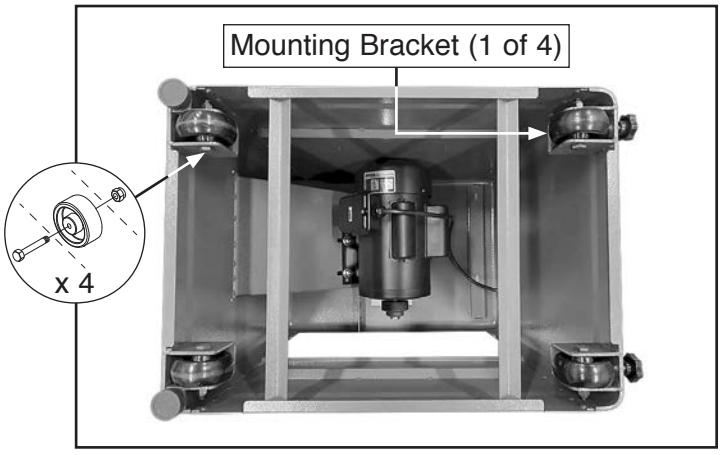

Figure 2. Wheels installed on stand mounting brackets.

4. Thread (1) M8-1.25 hex nut on each M8-1.25 adjustable foot and fully tighten.

5. Install (2) M8-1.25 adjustable feet in mounting holes on bottom of stand (see **Figure 3**).

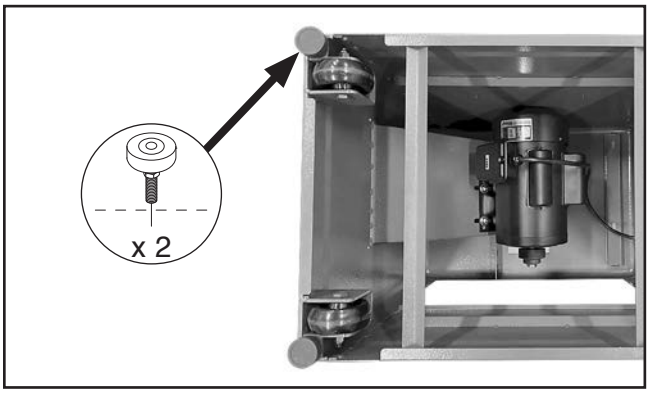

Figure 3. Adjustable feet installed on stand.

6. Install (2) mobile base lock knobs on stand and fully tighten to prevent wheels from moving (see **Figure 4**).

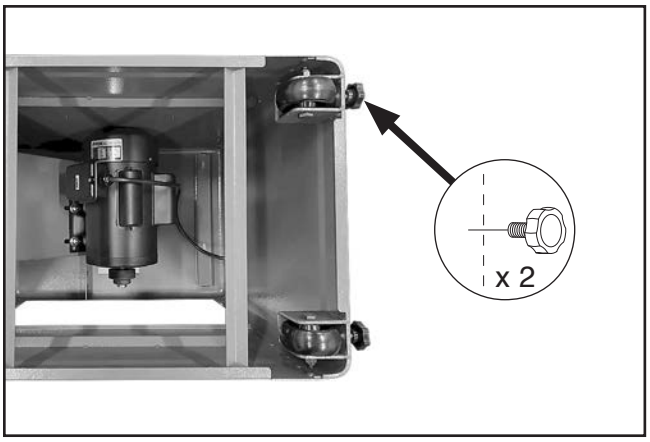

Figure 4. Mobile base lock knobs installed on stand.

7. With help from an additional person, turn stand upright and place on top of a flat, even surface. Verify mobile base lock knobs prevent stand from moving.

8. Remove top and sides of shipping crate, then place small items aside in safe location.

9. Remove belt cover from table assembly and set aside in safe location.

10. If lifting table assembly without power lifting equipment, lift table assembly off shipping pallet with help from (3) additional people and carefully place it on top of stand. Proceed to **Step 12**.

IMPORTANT: Tighten table locks to prevent damaging tables.

11. If lifting table assembly with power lifting equipment, attach lifting slings to table assembly, as shown in **Figure 5**, and carefully place it on top of stand.

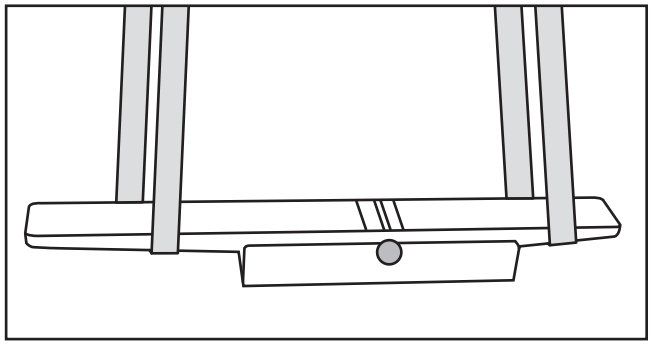

Figure 5. Lifting slings properly positioned.

12. Adjust position of table assembly so cutterhead and motor pulleys are aligned, and then secure table assembly to stand with (3) ⅜"-16 x ¾ x 3⁵⁄₁₆" standoff hex bolts and (3) 10mm lock washers (see **Figure 6**).



Figure 6. Table assembly secured to stand.

13. Adjust feet until jointer is stable, without any rocking or wobbling (see **Figure 7**).

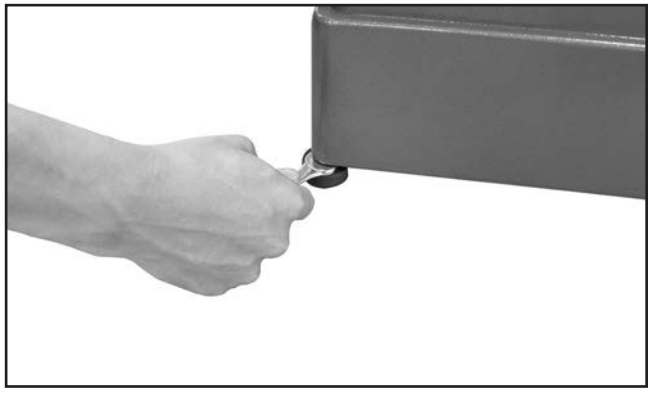

Figure 7. Leveling jointer.

14. Loosen motor mount fasteners (see **Figure 8**). DO NOT completely remove fasteners.

15. Slide motor upward, place V-belt around cutterhead pulley and motor pulley, then slide motor down to rest on belt (see **Figure 8**).

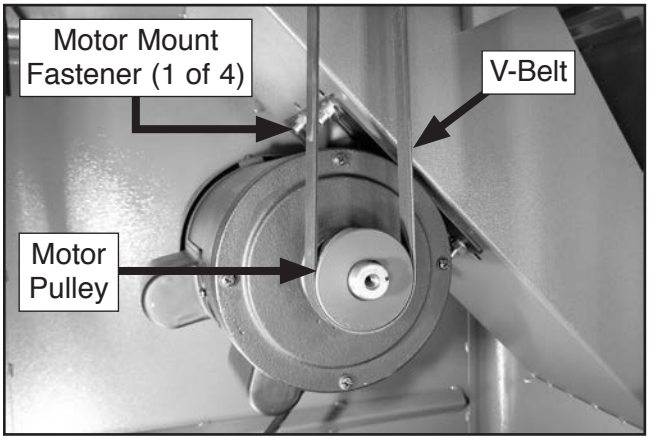

Figure 8. V-belt installed.

16. Loosen fence lock lever and adjust fence as needed, then look down length of belt and pulley faces to check pulley alignment (see **Figure 9**). If available, use a narrow straightedge against pulley faces to check alignment.

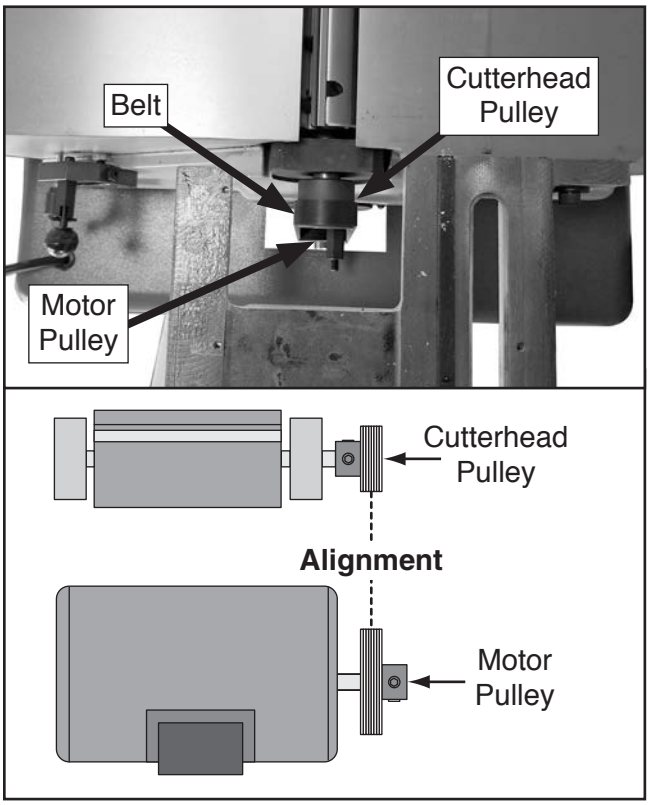

Figure 9. Checking pulley alignment (fence removed for clarity).

— If pulleys *are* aligned, proceed to **Step 19**.

— If pulleys *are not* aligned, perform **Steps 17–18**.

17. Loosen (2) motor pulley set screws and (1) cutterhead pulley set screw and align both pulleys (use straightedge if needed).

18. Tighten set screws and repeat **Step 16** to verify proper pulley alignment.

19. Adjust belt tension by applying downward pressure on motor until there is approximately ¼" deflection when belt is pushed with moderate force (see **Figure 10**).

Note: *After first 16 hours of operation, re-tension belt, as it will stretch and seat during this time, which causes it to lose the initial tension you set.*

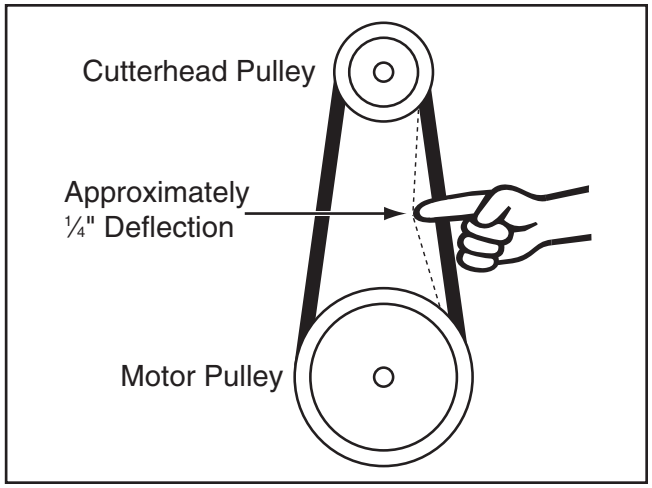

Figure 10. Checking for proper belt tension.

20. Tighten motor mount fasteners (see **Figure 8** on **Page 3**).

21. Install belt cover removed in **Step 9**, then perform **Steps 17–25** of **Assembly** beginning on **Page 22** of the owner's manual.

Revised Accessories

T30024—Powered Respirator Kit

Breathing wood dust could cause severe respiratory illnesses. This kit is a lightweight, comfortable, and easy-to-carry device for protecting the airway from small particulates.



Figure 11. T30024 Powered Respirator Kit.

Basic Eye Protection

T32323—Woodturners Face Shield
T32401—EDGE Brazeau Safety Glasses, Clear
T32402—EDGE Khor G2 Safety Glasses, Tint
T32404—EDGE Mazeno Safety Glasses, Clear



Figure 12. Assortment of basic eye protection.

MODEL G0855/G0856
8" DOVETAIL JOINTER
w/MOBILE BASE
OWNER'S MANUAL
(For models manufactured since 01/21)



C US
175370

COPYRIGHT © OCTOBER, 2018 BY GRIZZLY INDUSTRIAL, INC. REVISED MAY, 2021 (BL)
WARNING: NO PORTION OF THIS MANUAL MAY BE REPRODUCED IN ANY SHAPE OR FORM WITHOUT THE WRITTEN APPROVAL OF GRIZZLY INDUSTRIAL, INC.
#ES19680 PRINTED IN TAIWAN V4.05.21

⚠ WARNING!

This manual provides critical safety instructions on the proper setup, operation, maintenance, and service of this machine/tool. Save this document, refer to it often, and use it to instruct other operators.

Failure to read, understand and follow the instructions in this manual may result in fire or serious personal injury—including amputation, electrocution, or death.

The owner of this machine/tool is solely responsible for its safe use. This responsibility includes but is not limited to proper installation in a safe environment, personnel training and usage authorization, proper inspection and maintenance, manual availability and comprehension, application of safety devices, cutting/sanding/grinding tool integrity, and the usage of personal protective equipment.

The manufacturer will not be held liable for injury or property damage from negligence, improper training, machine modifications or misuse.

⚠ WARNING!

Some dust created by power sanding, sawing, grinding, drilling, and other construction activities contains chemicals known to the State of California to cause cancer, birth defects or other reproductive harm. Some examples of these chemicals are:

- **Lead from lead-based paints.**
- **Crystalline silica from bricks, cement and other masonry products.**
- **Arsenic and chromium from chemically-treated lumber.**

Your risk from these exposures varies, depending on how often you do this type of work. To reduce your exposure to these chemicals: Work in a well ventilated area, and work with approved safety equipment, such as those dust masks that are specially designed to filter out microscopic particles.

Table of Contents

INTRODUCTION 2
- Contact Info 2
- Machine Differences 2
- Manual Accuracy 2
- Identification 3
- Controls & Components 4
- Machine Data Sheet (G0855) 6
- Machine Data Sheet (G0856) 8

SECTION 1: SAFETY 10
- Safety Instructions for Machinery 10
- Additional Safety for Jointers 12

SECTION 2: POWER SUPPLY 13

SECTION 3: SETUP 15
- Needed for Setup 15
- Unpacking 15
- Inventory 16
- Hardware Recognition Chart 17
- Cleanup 18
- Site Considerations 19
- Assembly 20
- Knife-Setting Jig (G0855) 23
- Dust Collection 24
- Test Run 24
- Tightening Belt 25
- Disabling & Locking Switch 25

SECTION 4: OPERATIONS 26
- Operation Overview 26
- Stock Inspection & Requirements 27
- Squaring Stock 28
- Surface Planing 29
- Edge Jointing 30
- Bevel Cutting 31
- Rabbet Cutting 32
- Setting Depth of Cut 33

SECTION 5: ACCESSORIES 35

SECTION 6: MAINTENANCE 37
- Schedule 37
- Cleaning & Protecting 37
- Lubrication 38

SECTION 7: SERVICE 39
- Troubleshooting 39
- Setting/Replacing Knives (G0855) 41
- Rotating/Replacing Helical Cutterhead Inserts (G0856) 44
- Adjusting Gibs 45
- Checking/Adjusting Table Parallelism 46
- Setting Outfeed Table Height 47
- Setting Fence Stops 48
- Calibrating Depth-of-Cut Scale 50
- Tensioning/Replacing V-Belt 51
- Checking/Aligning Pulleys 52
- Checking/Adjusting Cutterhead Guard 53

SECTION 8: WIRING 54
- Wiring Safety Instructions 54
- Wiring Diagram 55

SECTION 9: PARTS 56
- Fence & Cutterhead 56
- Tables, Base, Stand & Motor 57
- Labels & Cosmetics 60

WARRANTY & RETURNS 61

⚠WARNING

Like all machinery there is potential danger when operating this machine. Accidents are frequently caused by lack of familiarity or failure to pay attention. Use this machine with respect and caution to decrease the risk of operator injury. If normal safety precautions are overlooked or ignored, serious personal injury may occur.

⚠WARNING

No list of safety guidelines can be complete. Every shop environment is different. Always consider safety first, as it applies to your individual working conditions. Use this and other machinery with caution and respect. Failure to do so could result in serious personal injury, damage to equipment, or poor work results.

INTRODUCTION

Contact Info

We stand behind our machines! If you have questions or need help, contact us with the information below. Before contacting, make sure you get the **serial number** and **manufacture date** from the machine ID label. This will help us help you faster.

Grizzly Technical Support
1815 W. Battlefield
Springfield, MO 65807
Phone: (570) 546-9663
Email: techsupport@grizzly.com

We want your feedback on this manual. What did you like about it? Where could it be improved? Please take a few minutes to give us feedback.

Grizzly Documentation Manager
P.O. Box 2069
Bellingham, WA 98227-2069
Email: manuals@grizzly.com

Machine Differences

Models G0855 and G0856 are 3 HP, 8" x 72" jointers with the following differences:

- **Model G0855** has a 4-knife cutterhead with high-speed steel knives.
- **Model G0856** has a helical cutterhead with 4 spirals and 36 indexable carbide inserts.

Manual Accuracy

We are proud to provide a high-quality owner's manual with your new machine!

We made every effort to be exact with the instructions, specifications, drawings, and photographs in this manual. Sometimes we make mistakes, but our policy of continuous improvement also means that **sometimes the machine you receive is slightly different than shown in the manual**.

If you find this to be the case, and the difference between the manual and machine leaves you confused or unsure about something, check our website for an updated version. We post current manuals and manual updates for free on our website at **www.grizzly.com**.

Alternatively, you can call our Technical Support for help. Before calling, make sure you write down the **Manufacture Date** and **Serial Number** from the machine ID label (see below). This information is required for us to provide proper tech support, and it helps us determine if updated documentation is available for your machine.

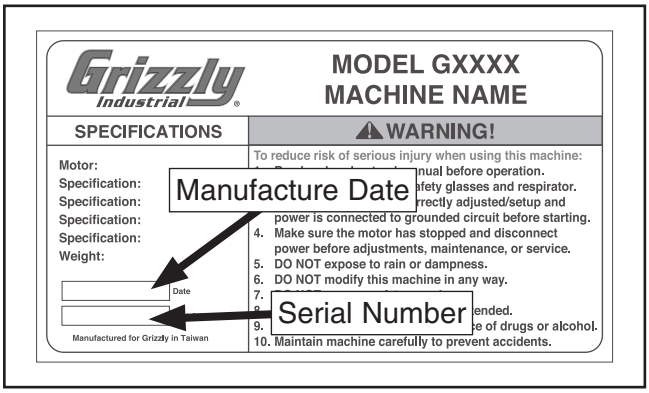

Identification

Become familiar with the names and locations of the controls and features shown below to better understand the instructions in this manual.

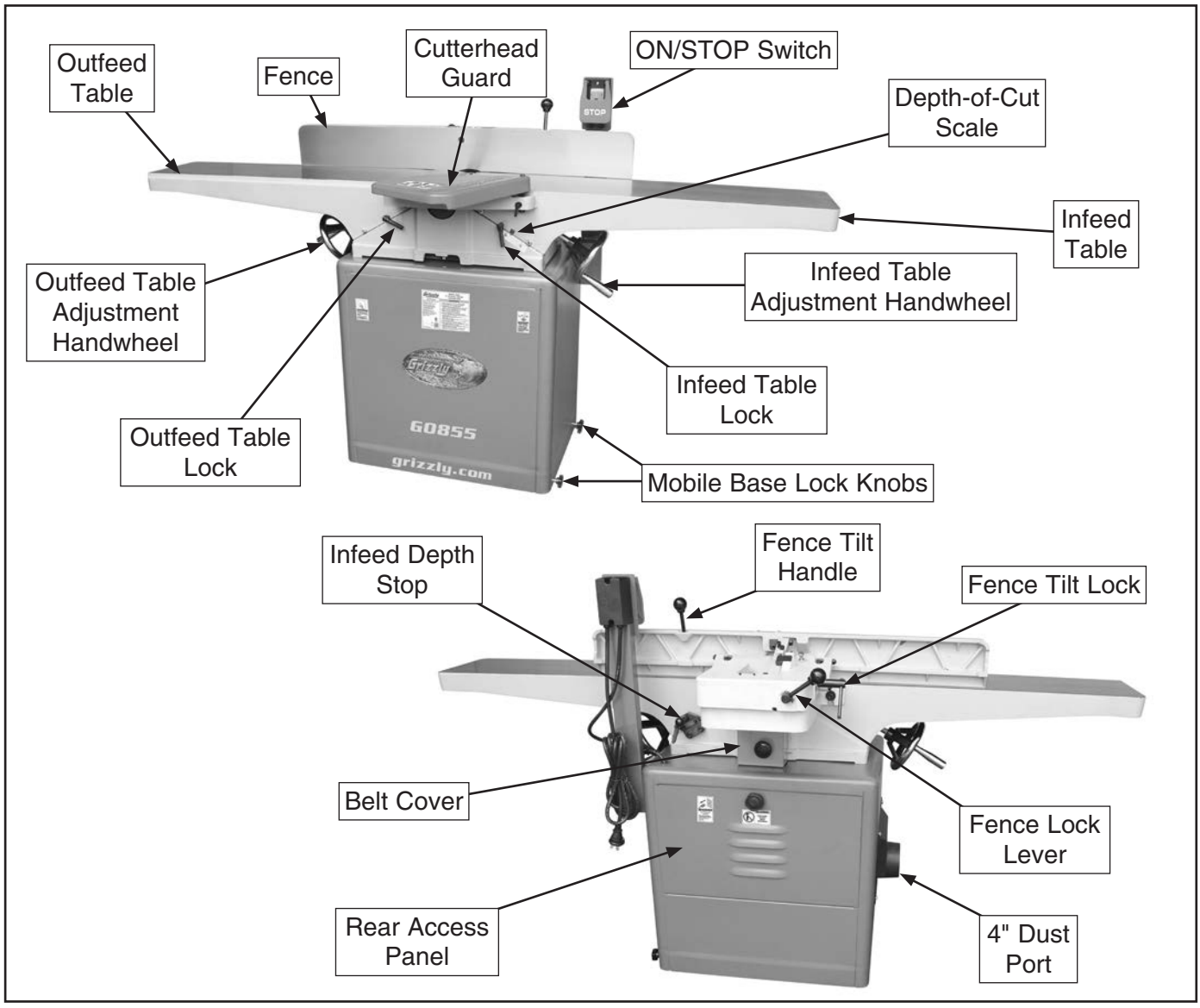

⚠WARNING

For Your Own Safety Read Instruction Manual Before Operating Jointer

a) Wear eye protection.
b) Always keep cutterhead and drive guards in place and in proper operating condition. ALWAYS replace cutterhead guard after rabbeting operations.
c) Never make jointing or rabbeting cuts deeper than ⅛" or planing cuts deeper than 1/16".
d) Always use hold-down or push blocks when jointing material narrower than 3" or planing material thinner than 3".
e) Never perform jointing, planing, or rabbeting cuts on pieces shorter than 10" in length.

Controls & Components

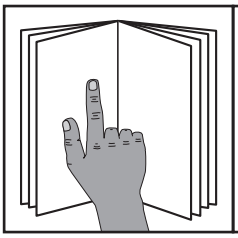

⚠WARNING

To reduce your risk of serious injury, read this entire manual BEFORE using machine.

Refer to **Figures 1–5** and the following descriptions to become familiar with the basic controls and components of this machine. Understanding these items and how they work will help you understand the rest of the manual and stay safe when operating this machine.

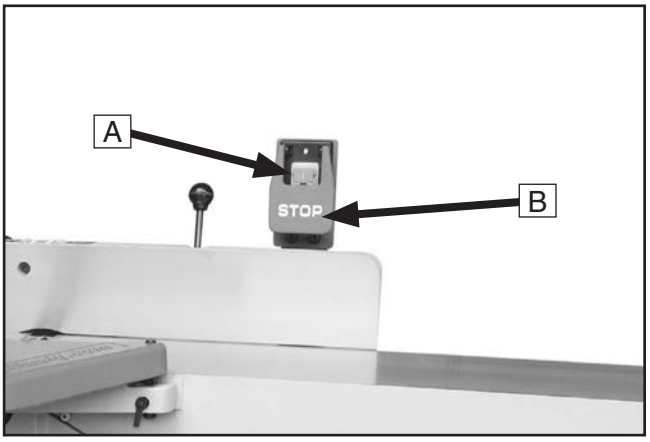

Figure 1. ON/STOP controls.

A. ON Button: Push to start motor. Insert padlock through button to disable (padlock not included).

B. STOP Paddle: Push to stop motor.

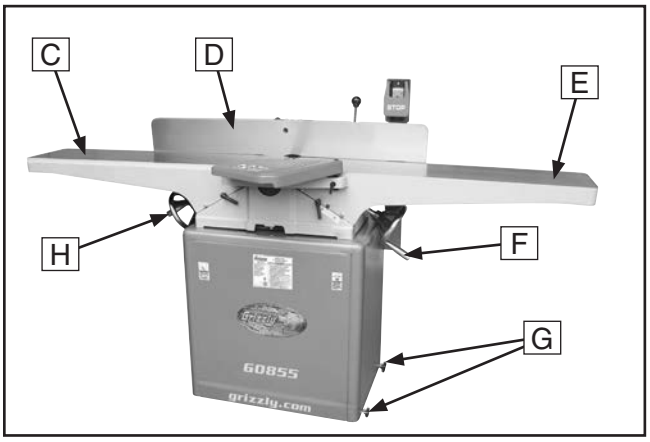

Figure 2. Table controls and components.

C. Outfeed Table: Supports workpiece after it passes over cutterhead. For optimum results, outfeed table must be properly adjusted even with highest point of cutterhead knives/inserts.

D. Fence: Supports workpiece laterally as it moves across cutterhead; determines angle of cut when edge or bevel jointing.

E. Infeed Table: Supports workpiece before it reaches cutterhead. Position of infeed table relative to cutterhead knives/inserts determines depth of cut.

F. Infeed Table Adjustment Handwheel: Rotate to adjust position of infeed table (when infeed table lock is loosened).

G. Mobile Base Lock Knobs: Tighten to secure jointer in position; loosen to move jointer.

H. Outfeed Table Adjustment Handwheel: Rotate to adjust position of outfeed table (when outfeed table lock is loosened). Only used when setting outfeed table even with cutterhead knives/inserts.

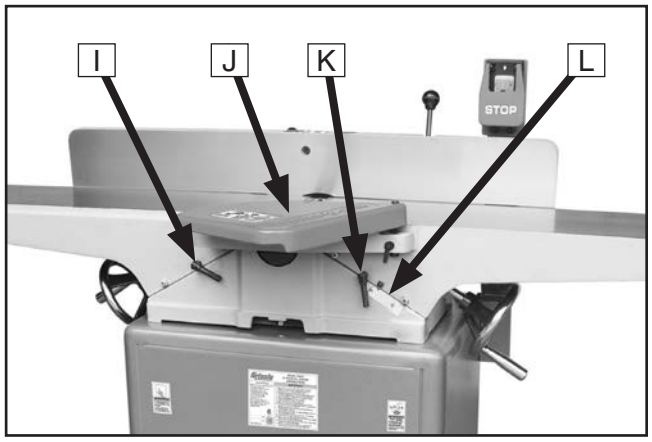

Figure 3. Table locks, cutterhead guard, and depth-of-cut scale.

I. Outfeed Table Lock: Tighten to secure outfeed table position; loosen for table adjustment.

J. Cutterhead Guard: Covers cutterhead until workpiece pushes guard out of the way during operation. When workpiece leaves cutterhead, guard springs back to its starting position.

K. Infeed Table Lock: Tighten to secure infeed table position; loosen for table adjustment.

L. Depth-of-Cut Scale: Indicates depth of cut (per pass).

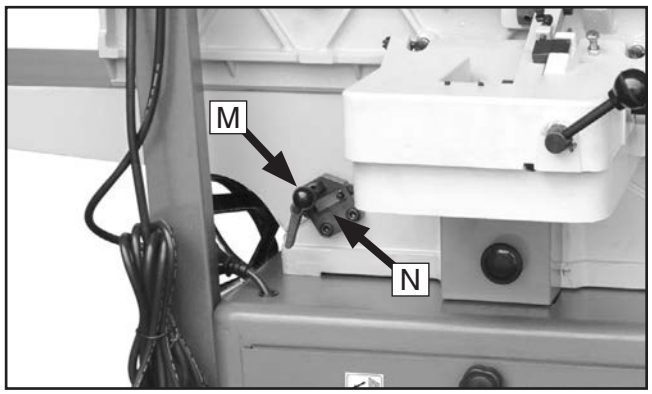

Figure 4. Infeed table stops.

M. ⅛" Infeed Table Stop Release Knob: Pull and hold knob out to lower infeed table more than ⅛". Infeed table stop automatically sets depth of cut at ⅛".

N. Infeed Depth Stop: Use to adjust infeed table between finish/final cuts and shaping/heavy cuts. Also limits movement range of infeed table.

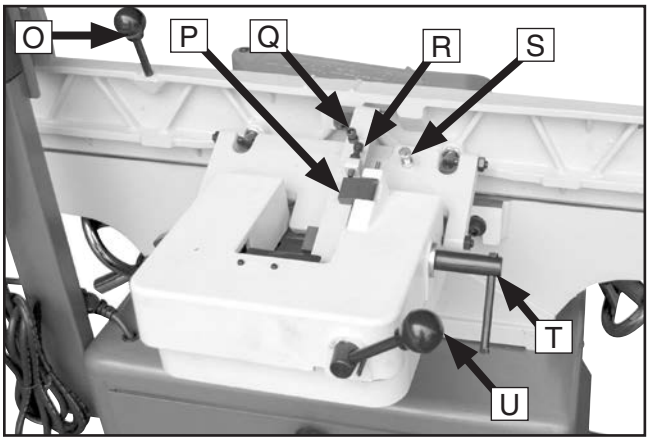

Figure 5. Fence controls.

O. Fence Tilt Handle: Use to tilt fence throughout its range of motion from 45° inward to 45° outward (135°). (Fence tilt lock must be loosened first.)

P. 90° Stop Block: Swivels to engage with 90° stop bolt. When engaged, stops fence at 90°. When disengaged, allows bevel cuts greater than 90°.

Q. 45° Inward Fence Stop: Stops fence at 45° inward.

R. 90° Stop Fence Stop: Stops fence at 90°.

S. 45° Outward Fence Stop: Stops fence at 45° outward (135°).

T. Fence Tilt Lock: Tighten to secure fence at any position in available tilt range.

IMPORTANT: Always tighten tilt lock before starting machine—even when fence is resting against stops.

U. Fence Lock Lever: Tighten to secure fence position along width of tables; loosen for fence adjustment.

MACHINE DATA SHEET

Customer Service #: (570) 546-9663 · To Order Call: (800) 523-4777 · Fax #: (800) 438-5901

MODEL G0855 8" X 72" DOVETAIL JOINTER WITH BUILT-IN MOBILE BASE

Product Dimensions:

Weight..... 335 lbs.
Width (side-to-side) x Depth (front-to-back) x Height..... 72-1/2 x 25-1/2 x 42 in.
Footprint (Length x Width)..... 23-1/2 x 17 in.

Shipping Dimensions:

Carton #1

Type..... Wood Crate
Content..... Machine
Weight..... 373 lbs.
Length x Width x Height..... 74 x 25 x 15 in.
Must Ship Upright..... Yes

Carton #2

Type..... Cardboard Box
Content..... Stand
Weight..... 115 lbs.
Length x Width x Height..... 26 x 18 x 27 in.
Must Ship Upright..... Yes

Electrical:

Power Requirement..... 230V, Single-Phase, 60 Hz
Motor Size..... 3 HP
Full-Load Current Rating..... 12A
Minimum Circuit Size..... 20A
Connection Type..... Cord & Plug
Power Cord Included..... Yes
Power Cord Length..... 6 ft.
Power Cord Gauge..... 14 AWG
Plug Included..... Yes
Included Plug Type..... 6-20
Switch Type..... Push Button Magnetic w/Large Shut-Off Paddle

Motors:

Main

Horsepower..... 3 HP
Phase..... Single-Phase
Amps..... 12A
Speed..... 3450 RPM
Type..... TEFC Capacitor-Start Induction
Power Transfer ..... Belt Drive
Bearings..... Sealed & Permanently Lubricated
Centrifugal Switch/Contacts Type..... External

Main Specifications:

Main Specifications

Jointer Size	8 in.
Bevel Jointing	0 – 45 deg. L/R
Maximum Width of Cut	8 in.
Maximum Depth of Cut	1/8 in.
Minimum Workpiece Length	10 in.
Minimum Workpiece Thickness	1/2 in.
Maximum Rabbeting Depth	1/2 in.
Number of Cuts Per Minute	22,000

Fence Information

Fence Length	38 in.
Fence Width	1-1/4 in.
Fence Height	4-5/8 in.
Fence Stops	45, 90, 135 deg.

Cutterhead Information

Cutterhead Type	4 Knife
Cutterhead Diameter	3-1/16 in.
Cutterhead Speed	5500 RPM

Knife Information

Number of Knives	4
Knife Type	HSS, Single-Sided
Knife Length	8 in.
Knife Width	3/4 in.
Knife Thickness	1/8 in.
Knife Adjustment	Jack Screws or Springs

Table Information

Table Length	72 in.
Table Width	9 in.
Table Thickness	1-3/4 in.
Floor to Table Height	32 in.
Table Adjustment Type	Handwheels
Table Movement Type	Dovetailed Ways

Construction

Body Assembly	Cast Iron
Cabinet	Sheet Metal
Fence Assembly	Precision-Ground Cast Iron
Guard	Die-Cast Aluminum
Table	Precision-Ground Cast Iron
Paint Type/Finish	Powder Coated

Other Information

Number of Dust Ports	1
Dust Port Size	4 in.
Mobile Base	Built-In

Other Specifications:

Country of Origin	Taiwan
Warranty	1 Year
Approximate Assembly & Setup Time	1 Hour
Serial Number Location	Machine ID Label
ISO 9001 Factory	Yes
Certified by a Nationally Recognized Testing Laboratory (NRTL)	Yes

MACHINE DATA SHEET

Customer Service #: (570) 546-9663 · To Order Call: (800) 523-4777 · Fax #: (800) 438-5901

MODEL G0856 8" X 72" JOINTER WITH HELICAL CUTTERHEAD & MOBILE BASE

Product Dimensions:

Weight..... 335 lbs.
Width (side-to-side) x Depth (front-to-back) x Height..... 72-1/2 x 25-1/2 x 42 in.
Footprint (Length x Width)..... 23-1/2 x 17 in.

Shipping Dimensions:

Carton #1

Type..... Wood Crate
Content..... Machine
Weight..... 373 lbs.
Length x Width x Height..... 74 x 25 x 15 in.
Must Ship Upright..... Yes

Carton #2

Type..... Cardboard Box
Content..... Stand
Weight..... 115 lbs.
Length x Width x Height..... 26 x 18 x 27 in.
Must Ship Upright..... Yes

Electrical:

Power Requirement..... 230V, Single-Phase, 60 Hz
Motor Size..... 3 HP
Full-Load Current Rating..... 12A
Minimum Circuit Size..... 20A
Connection Type..... Cord & Plug
Power Cord Included..... Yes
Power Cord Length..... 6 ft.
Power Cord Gauge..... 14 AWG
Plug Included..... Yes
Included Plug Type..... 6-20
Switch Type..... Push Button Magnetic w/Large Shut-Off Paddle

Motors:

Main

Horsepower..... 3 HP
Phase..... Single-Phase
Amps..... 12A
Speed..... 3450 RPM
Type..... TEFC Capacitor-Start Induction
Power Transfer ..... Belt Drive
Bearings..... Sealed & Permanently Lubricated
Centrifugal Switch/Contacts Type..... External

Main Specifications:

Main Specifications

Jointer Size	8 in.
Bevel Jointing	0 – 45 deg. L/R
Maximum Width of Cut	8 in.
Maximum Depth of Cut	1/8 in.
Minimum Workpiece Length	10 in.
Minimum Workpiece Thickness	1/2 in.
Maximum Rabbeting Depth	1/2 in.
Number of Cuts Per Minute	22,000

Fence Information

Fence Length	38 in.
Fence Width	1-1/4 in.
Fence Height	4-5/8 in.
Fence Stops	45, 90, 135 deg.

Cutterhead Information

Cutterhead Type	Helical
Cutterhead Diameter	3-1/16 in.
Number of Cutter Spirals	4
Number of Indexable Cutters	36
Cutterhead Speed	5500 RPM

Cutter Insert Information

Cutter Insert Type	Indexable Carbide
Cutter Insert Length	15 mm
Cutter Insert Width	15 mm
Cutter Insert Thickness	2.5 mm

Table Information

Table Length	72 in.
Table Width	9 in.
Table Thickness	1-3/4 in.
Floor to Table Height	32 in.
Table Adjustment Type	Handwheels
Table Movement Type	Dovetailed Ways

Construction

Body Assembly	Cast Iron
Cabinet	Sheet Metal
Fence Assembly	Precision-Ground Cast Iron
Guard	Die-Cast Aluminum
Table	Precision-Ground Cast Iron
Paint Type/Finish	Powder Coated

Other Information

Number of Dust Ports	1
Dust Port Size	4 in.
Mobile Base	Built-In

Other Specifications:

Country of Origin	Taiwan
Warranty	1 Year
Approximate Assembly & Setup Time	1 Hour
Serial Number Location	Machine ID Label
ISO 9001 Factory	Yes

SECTION 1: SAFETY

For Your Own Safety, Read Instruction Manual Before Operating This Machine

The purpose of safety symbols is to attract your attention to possible hazardous conditions. This manual uses a series of symbols and signal words intended to convey the level of importance of the safety messages. The progression of symbols is described below. Remember that safety messages by themselves do not eliminate danger and are not a substitute for proper accident prevention measures. Always use common sense and good judgment.

⚠DANGER **Indicates an imminently hazardous situation which, if not avoided, WILL result in death or serious injury.**

⚠WARNING **Indicates a potentially hazardous situation which, if not avoided, COULD result in death or serious injury.**

⚠CAUTION **Indicates a potentially hazardous situation which, if not avoided, MAY result in minor or moderate injury. It may also be used to alert against unsafe practices.**

NOTICE **Alerts the user to useful information about proper operation of the machine to avoid machine damage.**

Safety Instructions for Machinery

⚠WARNING

OWNER'S MANUAL. Read and understand this owner's manual BEFORE using machine.

TRAINED OPERATORS ONLY. Untrained operators have a higher risk of being hurt or killed. Only allow trained/supervised people to use this machine. When machine is not being used, disconnect power, remove switch keys, or lock-out machine to prevent unauthorized use—especially around children. Make your workshop kid proof!

DANGEROUS ENVIRONMENTS. Do not use machinery in areas that are wet, cluttered, or have poor lighting. Operating machinery in these areas greatly increases the risk of accidents and injury.

MENTAL ALERTNESS REQUIRED. Full mental alertness is required for safe operation of machinery. Never operate under the influence of drugs or alcohol, when tired, or when distracted.

ELECTRICAL EQUIPMENT INJURY RISKS. You can be shocked, burned, or killed by touching live electrical components or improperly grounded machinery. To reduce this risk, only allow qualified service personnel to do electrical installation or repair work, and always disconnect power before accessing or exposing electrical equipment.

DISCONNECT POWER FIRST. Always disconnect machine from power supply BEFORE making adjustments, changing tooling, or servicing machine. This prevents an injury risk from unintended startup or contact with live electrical components.

EYE PROTECTION. Always wear ANSI-approved safety glasses or a face shield when operating or observing machinery to reduce the risk of eye injury or blindness from flying particles. Everyday eyeglasses are NOT approved safety glasses.

⚠WARNING

WEARING PROPER APPAREL. Do not wear clothing, apparel or jewelry that can become entangled in moving parts. Always tie back or cover long hair. Wear non-slip footwear to reduce risk of slipping and losing control or accidentally contacting cutting tool or moving parts.

HAZARDOUS DUST. Dust created by machinery operations may cause cancer, birth defects, or long-term respiratory damage. Be aware of dust hazards associated with each workpiece material. Always wear a NIOSH-approved respirator to reduce your risk.

HEARING PROTECTION. Always wear hearing protection when operating or observing loud machinery. Extended exposure to this noise without hearing protection can cause permanent hearing loss.

REMOVE ADJUSTING TOOLS. Tools left on machinery can become dangerous projectiles upon startup. Never leave chuck keys, wrenches, or any other tools on machine. Always verify removal before starting!

USE CORRECT TOOL FOR THE JOB. Only use this tool for its intended purpose—do not force it or an attachment to do a job for which it was not designed. Never make unapproved modifications—modifying tool or using it differently than intended may result in malfunction or mechanical failure that can lead to personal injury or death!

AWKWARD POSITIONS. Keep proper footing and balance at all times when operating machine. Do not overreach! Avoid awkward hand positions that make workpiece control difficult or increase the risk of accidental injury.

CHILDREN & BYSTANDERS. Keep children and bystanders at a safe distance from the work area. Stop using machine if they become a distraction.

GUARDS & COVERS. Guards and covers reduce accidental contact with moving parts or flying debris. Make sure they are properly installed, undamaged, and working correctly BEFORE operating machine.

FORCING MACHINERY. Do not force machine. It will do the job safer and better at the rate for which it was designed.

NEVER STAND ON MACHINE. Serious injury may occur if machine is tipped or if the cutting tool is unintentionally contacted.

STABLE MACHINE. Unexpected movement during operation greatly increases risk of injury or loss of control. Before starting, verify machine is stable and mobile base (if used) is locked.

USE RECOMMENDED ACCESSORIES. Consult this owner's manual or the manufacturer for recommended accessories. Using improper accessories will increase the risk of serious injury.

UNATTENDED OPERATION. To reduce the risk of accidental injury, turn machine ***OFF*** and ensure all moving parts completely stop before walking away. Never leave machine running while unattended.

MAINTAIN WITH CARE. Follow all maintenance instructions and lubrication schedules to keep machine in good working condition. A machine that is improperly maintained could malfunction, leading to serious personal injury or death.

DAMAGED PARTS. Regularly inspect machine for damaged, loose, or mis-adjusted parts—or any condition that could affect safe operation. Immediately repair/replace BEFORE operating machine. For your own safety, DO NOT operate machine with damaged parts!

MAINTAIN POWER CORDS. When disconnecting cord-connected machines from power, grab and pull the plug—NOT the cord. Pulling the cord may damage the wires inside. Do not handle cord/plug with wet hands. Avoid cord damage by keeping it away from heated surfaces, high traffic areas, harsh chemicals, and wet/damp locations.

EXPERIENCING DIFFICULTIES. If at any time you experience difficulties performing the intended operation, stop using the machine! Contact our Technical Support at (570) 546-9663.

Additional Safety for Jointers

⚠WARNING

Serious cuts, amputation, entanglement, or death can occur from contact with rotating cutterhead or other moving components! Flying chips from cutting operations can cause eye injuries or blindness. Workpieces or inserts/knives thrown by cutterhead (kickback) can strike nearby operator or bystanders with deadly force. To reduce the risk of serious personal injury from these hazards, operator and bystanders MUST completely heed the hazards and warnings below.

KICKBACK. Occurs when workpiece is ejected from machine at a high rate of speed. Kickback injuries occur from getting struck by workpiece or hands being pulled into cutterhead. To reduce the risk of kickback, only use proper workpieces, safe feeding techniques, and proper machine setup or maintenance.

GUARD REMOVAL. Operating jointer without guards unnecessarily exposes operator to knives/inserts and other hazardous moving parts. Except when rabbeting, never operate jointer or allow it to be connected to power if any guards are removed. Turn jointer ***OFF*** and disconnect power before clearing any shavings or sawdust from around cutterhead. After rabbeting or maintenance is complete, immediately replace all guards and ensure they are properly installed/adjusted before resuming regular operations.

DULL OR DAMAGED KNIVES/INSERTS. Dull or damaged knives/inserts increase risk of kickback and cause poor workpiece finish. Only use sharp, undamaged knives/inserts.

OUTFEED TABLE ALIGNMENT. Setting outfeed table too high can cause workpiece to hit table or get stuck while feeding. Setting outfeed table too low may cause workpiece to rock or shift while feeding. Both of these results will increase risk of kickback. Always keep outfeed table even with knives/inserts at highest point during rotation.

INSPECTING STOCK. Impact injuries or kickback may result from using improper workpieces. Thoroughly inspect and prepare workpiece before cutting. Verify workpiece is free of nails, staples, loose knots or other foreign material. Always joint warped workpieces with cupped side facing down.

MAXIMUM CUTTING DEPTH. To reduce risk of kickback, never cut deeper than ⅛" per pass.

GRAIN DIRECTION. Jointing against the grain or end grain can increase risk of kickback. It also requires more cutting force, which produces chatter or excessive chip out. Always joint or surface plane WITH the grain.

CUTTING LIMITATIONS. Cutting workpieces that do not meet minimum dimension requirements can result in kickback or accidental contact with cutterhead. Never perform jointing, planing, or rabbeting cuts on pieces smaller than specified in machine data sheet.

PUSH BLOCKS. Push blocks reduce risk of accidental cutterhead contact with hands. Always use push blocks when planing materials less than 3" high or wide. Never pass your hands directly over cutterhead without a push block.

WORKPIECE SUPPORT. Poor workpiece support or loss of workpiece control while feeding will increase risk of kickback or accidental contact with cutterhead. Support workpiece with fence continuously during operation. Support long stock with auxiliary tables if necessary.

FEED WORKPIECE PROPERLY. Kickback or accidental cutterhead contact may result if workpiece is fed into cutterhead the wrong way. Allow cutterhead to reach full speed before feeding. Never start jointer with workpiece touching cutterhead. Always feed workpiece from infeed side to outfeed side without stopping until cut is complete. Never move workpiece backwards while feeding.

SECURE KNIVES/INSERTS. Loose knives or improperly set inserts can be thrown from cutterhead with dangerous force. Always verify knives/inserts are secure and properly adjusted before operation. Straight knives should never project more than ⅛" (0.125") from cutterhead body.

SECTION 2: POWER SUPPLY

Availability

Before installing the machine, consider the availability and proximity of the required power supply circuit. If an existing circuit does not meet the requirements for this machine, a new circuit must be installed. To minimize the risk of electrocution, fire, or equipment damage, installation work and electrical wiring must be done by an electrician or qualified service personnel in accordance with all applicable codes and standards.



⚠WARNING

Electrocution, fire, shock, or equipment damage may occur if machine is not properly grounded and connected to power supply.

Full-Load Current Rating

The full-load current rating is the amperage a machine draws at 100% of the rated output power. On machines with multiple motors, this is the amperage drawn by the largest motor or sum of all motors and electrical devices that might operate at one time during normal operations.

Full-Load Current Rating at 230V ..... 12 Amps

The full-load current is not the maximum amount of amps that the machine will draw. If the machine is overloaded, it will draw additional amps beyond the full-load rating.

If the machine is overloaded for a sufficient length of time, damage, overheating, or fire may result—especially if connected to an undersized circuit. To reduce the risk of these hazards, avoid overloading the machine during operation and make sure it is connected to a power supply circuit that meets the specified circuit requirements.

Circuit Information

A power supply circuit includes all electrical equipment between the breaker box or fuse panel in the building and the machine. The power supply circuit used for this machine must be sized to safely handle the full-load current drawn from the machine for an extended period of time. (If this machine is connected to a circuit protected by fuses, use a time delay fuse marked D.)

⚠CAUTION

For your own safety and protection of property, consult an electrician if you are unsure about wiring practices or electrical codes in your area.

Note: *Circuit requirements in this manual apply to a dedicated circuit—where only one machine will be running on the circuit at a time. If machine will be connected to a shared circuit where multiple machines may be running at the same time, consult an electrician or qualified service personnel to ensure circuit is properly sized for safe operation.*

Circuit Requirements

This machine is prewired to operate on a power supply circuit that has a verified ground and meets the following requirements:

Nominal Voltage 208V, 220V, 230V, 240V
Cycle ..... 60 Hz
Phase ..... Single-Phase
Power Supply Circuit ..... 20 Amps
Plug/Receptacle ..... NEMA 6-20

Grounding Requirements

This machine MUST be grounded. In the event of certain malfunctions or breakdowns, grounding reduces the risk of electric shock by providing a path of least resistance for electric current.

This machine is equipped with a power cord that has an equipment-grounding wire and a grounding plug. Only insert plug into a matching receptacle (outlet) that is properly installed and grounded in accordance with all local codes and ordinances. DO NOT modify the provided plug!

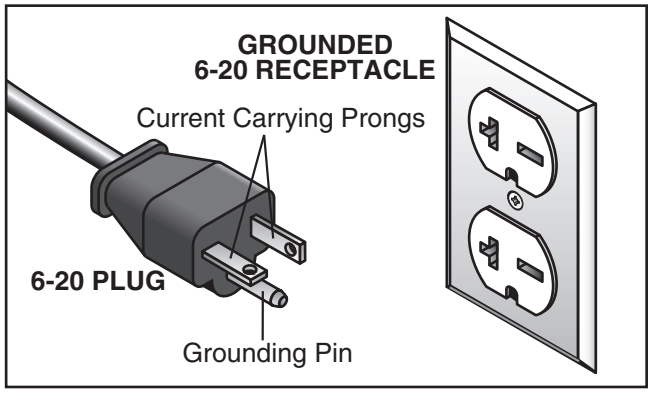

Figure 6. Typical 6-20 plug and receptacle.

⚠CAUTION

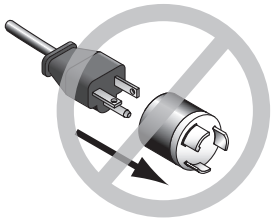

No adapter should be used with plug. If plug does not fit available receptacle, or if machine must be reconnected for use on a different type of circuit, reconnection must be performed by an electrician or qualified service personnel, and it must comply with all local codes and ordinances.

⚠WARNING

Serious injury could occur if you connect machine to power before completing setup process. DO NOT connect to power until instructed later in this manual.

Improper connection of the equipment-grounding wire can result in a risk of electric shock. The wire with green insulation (with or without yellow stripes) is the equipment-grounding wire. If repair or replacement of the power cord or plug is necessary, do not connect the equipment-grounding wire to a live (current carrying) terminal.

Check with a qualified electrician or service personnel if you do not understand these grounding requirements, or if you are in doubt about whether the tool is properly grounded. If you ever notice that a cord or plug is damaged or worn, disconnect it from power, and immediately replace it with a new one.

Extension Cords

We do not recommend using an extension cord with this machine. If you must use an extension cord, only use it if absolutely necessary and only on a temporary basis.

Extension cords cause voltage drop, which can damage electrical components and shorten motor life. Voltage drop increases as the extension cord size gets longer and the gauge size gets smaller (higher gauge numbers indicate smaller sizes).

Any extension cord used with this machine must be in good condition and contain a ground wire and matching plug/receptacle. Additionally, it must meet the following size requirements:

Minimum Gauge Size .....12 AWG
Maximum Length (Shorter is Better).....50 ft.

SECTION 3: SETUP

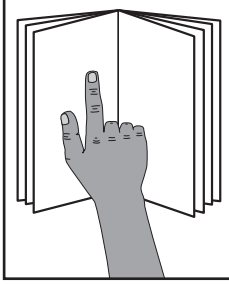

⚠WARNING

This machine presents serious injury hazards to untrained users. Read through this entire manual to become familiar with the controls and operations before starting the machine!



⚠WARNING

Wear safety glasses during the entire setup process!



⚠WARNING

HEAVY LIFT!

Straining or crushing injury may occur from improperly lifting machine or some of its parts. To reduce this risk, get help from other people and use a forklift (or other lifting equipment) rated for weight of this machine.



⚠WARNING

SUFFOCATION HAZARD!

Keep children and pets away from plastic bags or packing materials shipped with this machine.

Needed for Setup

The following items are needed, but not included, for the setup/assembly of this machine.

Description	Qty
• Additional People	1-3
• Safety Glasses	1 ea.
• Leather Gloves	1 Pair ea.
• Cleaner/Degreaser (**Page 18**)	As Needed
• Disposable Shop Rags	As Needed
• Lifting Equipment (Min. 600-lb. Rating):	
—Forklift or Hoist	1
—Lifting Slings	2
• Precision Straightedge 3'	1
• Phillips Screwdriver #2	1
• Dust-Collection System	1
• 4" Dust Hose (length as needed)	1
• 4" Hose Clamp	1

Unpacking

This machine was carefully packaged for safe transport. When unpacking, separate all enclosed items from packaging materials and inspect them for shipping damage. ***If items are damaged, please call us immediately at (570) 546-9663.***

IMPORTANT: Save all packaging materials until you are completely satisfied with the machine and have resolved any issues between Grizzly or the shipping agent. *You MUST have the original packaging to file a freight claim. It is also extremely helpful if you need to return your machine later.*

Inventory

The following is a list of items shipped with your machine. Before beginning setup, lay these items out and inventory them.

If any non-proprietary parts are missing (e.g. a nut or a washer), we will gladly replace them; or for the sake of expediency, replacements can be obtained at your local hardware store.

NOTICE

If you cannot find an item on this list, carefully check around/inside the machine and packaging materials. Often, these items get lost in packaging materials while unpacking or they are pre-installed at the factory.

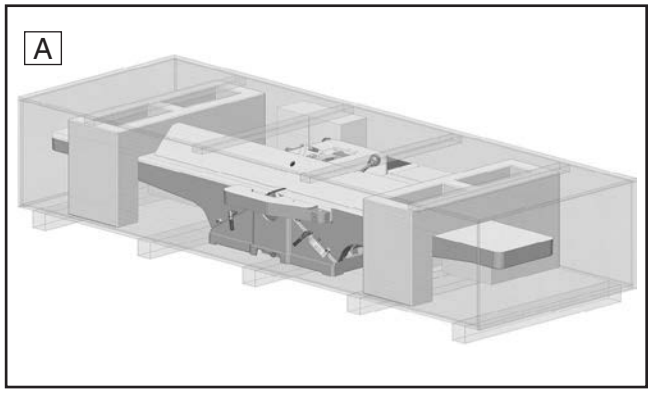

Figure 7. Inventory—wood crate.

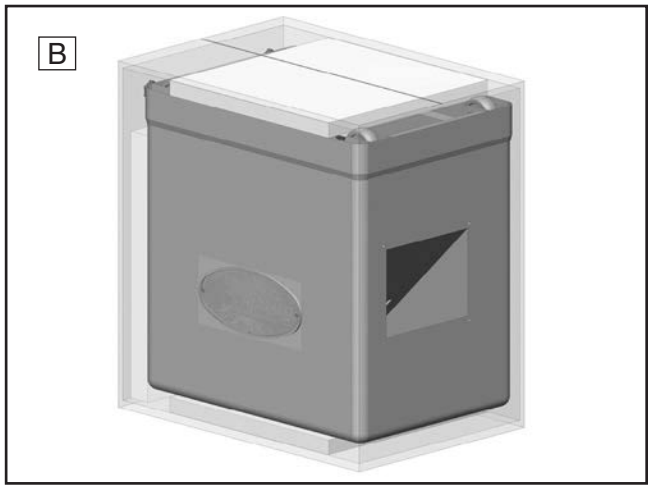

Figure 8. Inventory—cardboard box.

Wood Crate (Figure 7)	Qty
A. Table Assembly	1

Cardboard Box (Figure 8)	Qty
B. Stand	1

Loose Items (Figure 9)	Qty
C. Switch Pedestal Assembly	1
D. Lock Washers 8mm (Pedestal)	2
E. Cap Screws M8-1.25 x 70 (Pedestal)	2
F. Handwheels	2
G. Lock Washers 10mm	3
H. Standoff Hex 3/8"-16 x 3/4 x 3 5/16"	3
I. 4" Dust Port	1
J. Flat Washers 1/4"	4
K. Phillips Head Screws 1/4"-20 x 1/2"	4
L. Cutterhead Guard Assembly	1
M. Rear Access Panel	1
N. Push Blocks (Pair)	2
O. Belt	1
P. Hex Wrenches 3, 4, 5, 6mm	1 Ea.
Q. Open-End Wrenches 8/10, 11/13, 12/14mm	1 Ea.
R. Knife-Setting Jig (G0855)	
—External Retaining Rings	4
—Knife Jig Feet	2
—Knife Jig Rod	1
S. Cutterhead Tools and Hardware (G0856)	
—T-Handle Torx Driver T-25	2
—Torx Screws T-25 #10-32 x 1/2"	10
—Indexable Inserts 15 x 15 x 2.5mm	5

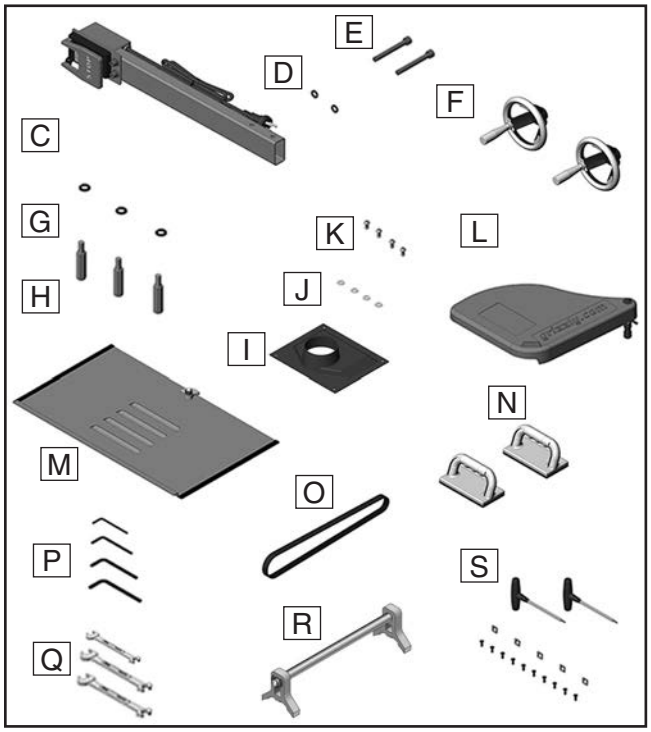

Figure 9. Inventory—loose items.

Hardware Recognition Chart

USE THIS CHART TO MATCH UP HARDWARE DURING THE INVENTORY AND ASSEMBLY PROCESS.

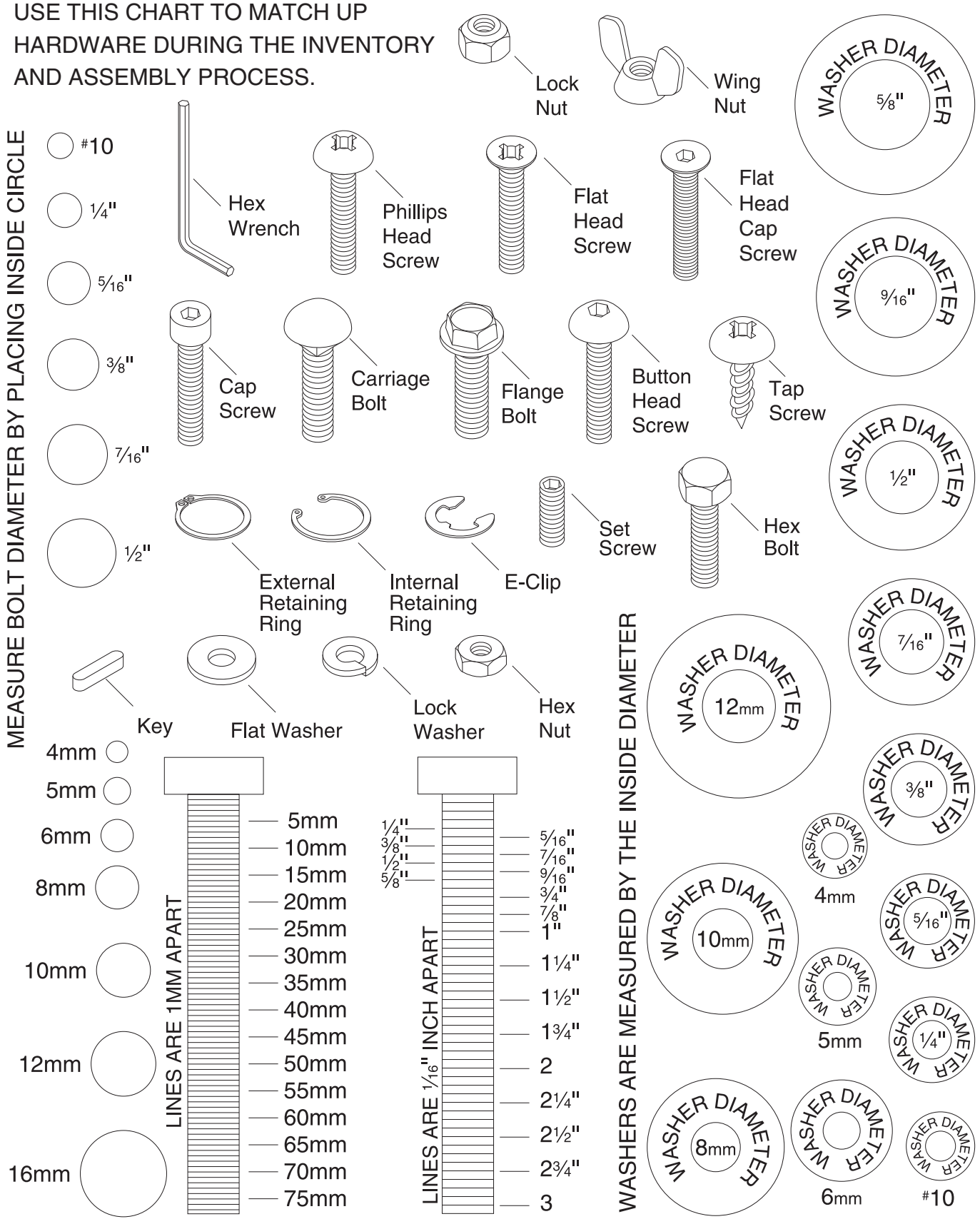

Cleanup

The unpainted surfaces of your machine are coated with a heavy-duty rust preventative that prevents corrosion during shipment and storage. This rust preventative works extremely well, but it will take a little time to clean.

Be patient and do a thorough job cleaning your machine. The time you spend doing this now will give you a better appreciation for the proper care of your machine's unpainted surfaces.

There are many ways to remove this rust preventative, but the following steps work well in a wide variety of situations. Always follow the manufacturer's instructions with any cleaning product you use and make sure you work in a well-ventilated area to minimize exposure to toxic fumes.

Before cleaning, gather the following:
- Disposable rags
- Cleaner/degreaser (WD•40 works well)
- Safety glasses & disposable gloves
- Plastic paint scraper (optional)

Basic steps for removing rust preventative:

1. Put on safety glasses.

2. Coat the rust preventative with a liberal amount of cleaner/degreaser, then let it soak for 5–10 minutes.

3. Wipe off the surfaces. If your cleaner/degreaser is effective, the rust preventative will wipe off easily. If you have a plastic paint scraper, scrape off as much as you can first, then wipe off the rest with the rag.

4. Repeat **Steps 2–3** as necessary until clean, then coat all unpainted surfaces with a quality metal protectant to prevent rust.



⚠WARNING

Gasoline and petroleum products have low flash points and can explode or cause fire if used to clean machinery. Avoid using these products to clean machinery.



⚠CAUTION

Many cleaning solvents are toxic if inhaled. Only work in a well-ventilated area.

NOTICE

Avoid harsh solvents like acetone or brake parts cleaner that may damage painted surfaces. Always test on a small, inconspicuous location first.

T23692—Orange Power Degreaser
A great product for removing the waxy shipping grease from the ***non-painted*** parts of the machine during clean up.



Figure 10. T23692 Orange Power Degreaser.

Site Considerations

Weight Load

Refer to the **Machine Data Sheet** for the weight of your machine. Make sure that the surface upon which the machine is placed will bear the weight of the machine, additional equipment that may be installed on the machine, and the heaviest workpiece that will be used. Additionally, consider the weight of the operator and any dynamic loading that may occur when operating the machine.

Space Allocation

Consider the largest size of workpiece that will be processed through this machine and provide enough space around the machine for adequate operator material handling or the installation of auxiliary equipment. With permanent installations, leave enough space around the machine to open or remove doors/covers as required by the maintenance and service described in this manual. **See below for required space allocation.**

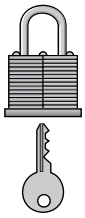

⚠CAUTION

Children or untrained people may be seriously injured by this machine. Only install in an access restricted location.

Physical Environment

The physical environment where the machine is operated is important for safe operation and longevity of machine components. For best results, operate this machine in a dry environment that is free from excessive moisture, hazardous chemicals, airborne abrasives, or extreme conditions. Extreme conditions for this type of machinery are generally those where the ambient temperature range exceeds 41°–104°F; the relative humidity range exceeds 20%–95% (non-condensing); or the environment is subject to vibration, shocks, or bumps.

Electrical Installation

Place this machine near an existing power source. Make sure all power cords are protected from traffic, material handling, moisture, chemicals, or other hazards. Make sure to leave enough space around machine to disconnect power supply or apply a lockout/tagout device, if required.

Lighting

Lighting around the machine must be adequate enough that operations can be performed safely. Shadows, glare, or strobe effects that may distract or impede the operator must be eliminated.

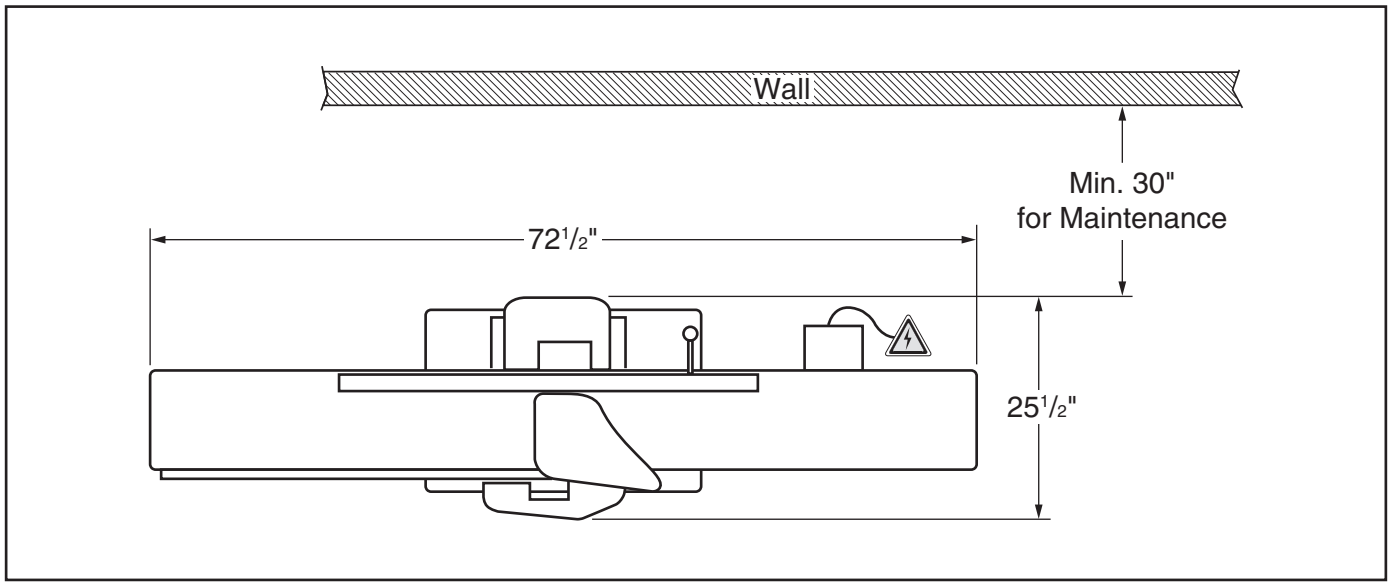

Figure 11. Minimum working clearances.

Assembly

The machine must be fully assembled before it can be operated. Before beginning the assembly process, refer to **Needed for Setup** and gather all listed items. To ensure the assembly process goes smoothly, first clean any parts that are covered or coated in heavy-duty rust preventative (if applicable).

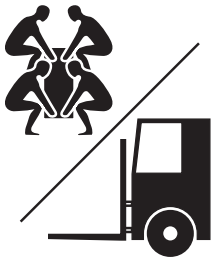

⚠WARNING

HEAVY LIFT!

Straining or crushing injury may occur from improperly lifting machine or some of its parts. To reduce this risk, get help from other people and use a forklift (or other lifting equipment) rated for weight of this machine.

This jointer is equipped with a mobile base to allow moving and placing of machine without power lifting equipment. DO NOT attempt to lift or move jointer without necessary assistance from other people. If using power lifting equipment (such as a forklift or crane), each piece of lifting equipment must be rated for **at least 600 lbs.** to support dynamic loads that may be applied while lifting.

Review the **Power Supply** section (see **Page 13**), then prepare a permanent location for the jointer.

NOTE: *Do not destroy cardboard box or wood shipping crate and packaging until after Test Run.*

To assemble jointer:

1. Open cardboard box and place stand upright.

2. Tighten mobile base lock knobs (see **Figure 2** on **Page 4**) to secure stand in position.

3. Remove top and sides of wood shipping crate, then place small items aside in safe location.

4. With help from another person, remove fence assembly, including belt cover, from table assembly and set aside in safe location.

5. If lifting table assembly without power lifting equipment, lift table assembly off shipping pallet with help of three people and carefully place it on top of stand. Proceed to **Step 7**.

   IMPORTANT: Tighten table locks to prevent damaging tables.

6. If lifting table assembly with power lifting equipment, attach lifting slings to table assembly, as shown in **Figure 12**, and carefully place it on top of stand.

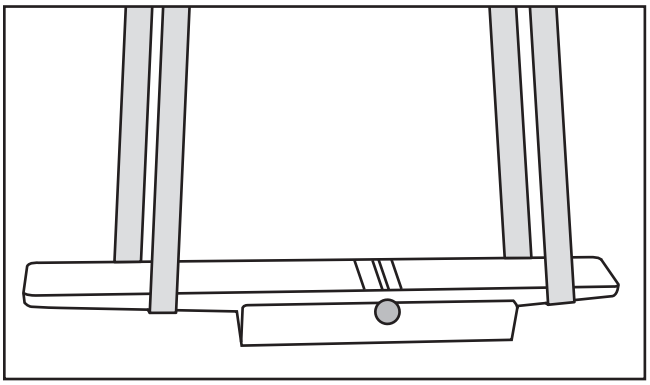

Figure 12. Lifting slings properly positioned.

7. Adjust position of table assembly so cutterhead and motor pulleys are aligned, and then secure table assembly to stand with (3) M10-1.5 x 40 standoff hex bolts and (3) 10mm lock washers (see **Figure 13**).



Figure 13. Table assembly secured to stand.

8. Adjust feet (see **Figure 14**) as necessary until jointer is stable without any rocking or wobbling.

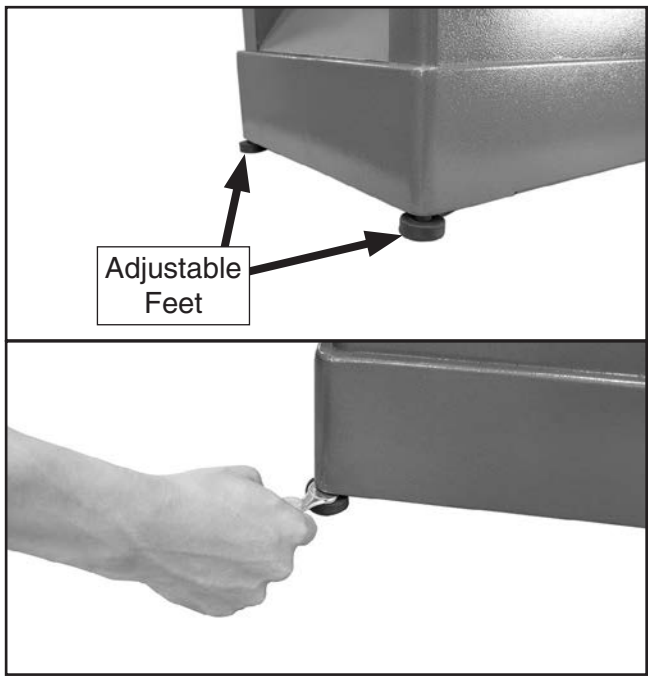

Figure 14. Leveling jointer.

9. Loosen motor mount fasteners shown in **Figure 15**. DO NOT completely remove fasteners.

10. Slide motor upward, place poly-V belt around cutterhead pulley and motor pulley, then slide motor down to rest on belt (see **Figure 15**).

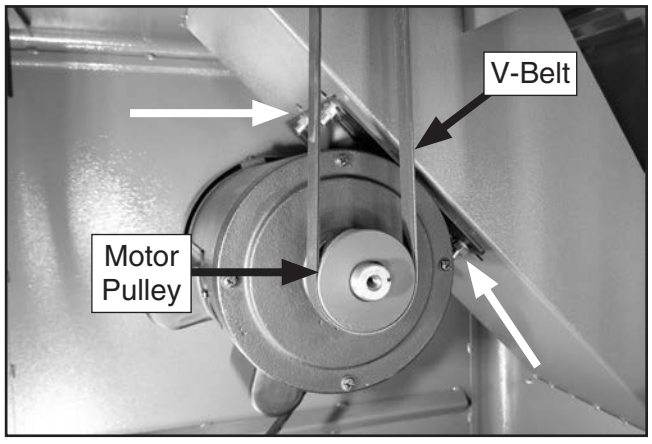

Figure 15. V-belt installed.

11. Look down length of belt and pulley faces to check pulley alignment (see **Figures 16–17**). If available use a narrow straightedge against pulley faces to check alignment.

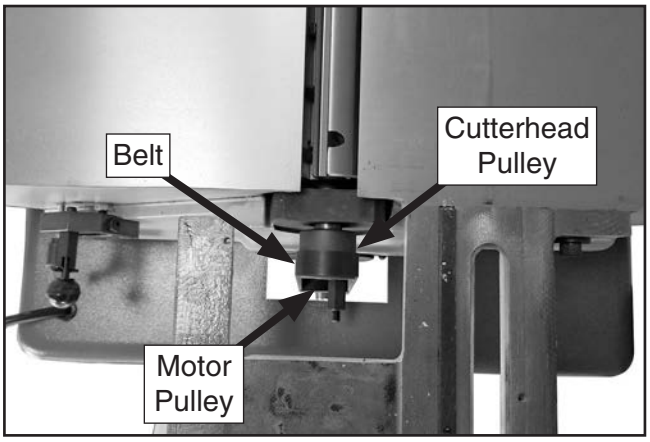

Figure 16. Checking pulley alignment (viewed from above).

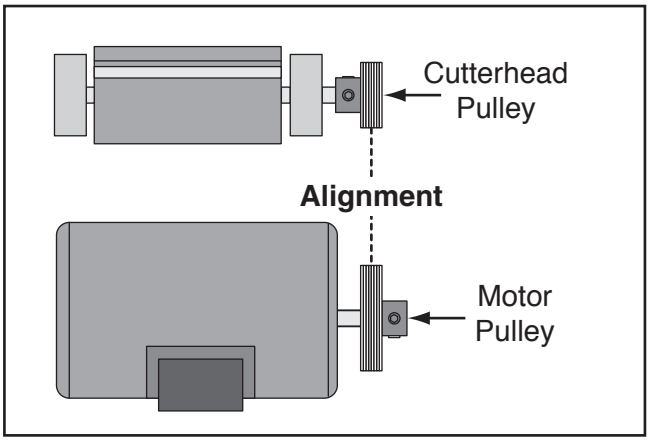

Figure 17. Proper pulley alignment.

— If pulleys *are* aligned, proceed to **Step 14**.

— If pulleys *are not* aligned, perform **Steps 12–13**.

12. Loosen motor pulley set screw and cutterhead pulley set screw and align both pulleys. (Use straightedge if needed.)

13. Tighten set screws and repeat **Step 10** to verify proper pulley alignment. Pulleys should be parallel and aligned, as shown in **Figure 17**, when belt is properly tensioned.

14. Adjust belt tension by applying downward pressure on motor until there is approximately ¼" deflection when belt is pushed with moderate force, as shown in **Figure 18.**

Note: *After the first 16 hours of operation, re-tension the belt, as it will stretch and seat during this time, which causes it to lose the initial tension you set.*

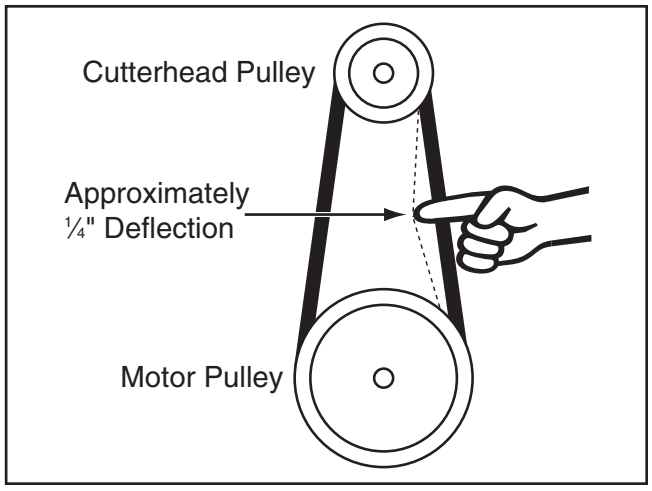

Figure 18. Checking for proper belt tension.

15. Tighten motor mount fasteners (see **Figure 15**).

16. Re-install fence assembly, including belt cover.

17. Attach switch pedestal to stand with (2) M8-1.25 x 20 cap screws and (2) 8mm lock washers (see **Figure 19**).

18. Connect switch cord to motor cord (see **Figure 19**).

Note: *The switch cord and motor cord have matching plugs for easy connection.*

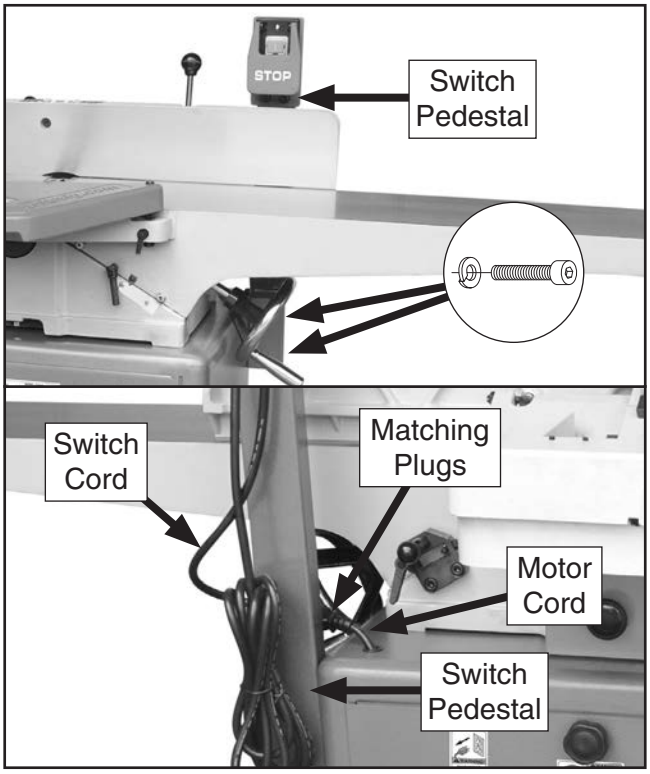

Figure 19. Switch pedestal attached to stand and cords connected.

19. Install dust port with (4) ¼"-20 x ½" Phillips head screws and (4) ¼" flat washers (see **Figure 20**).

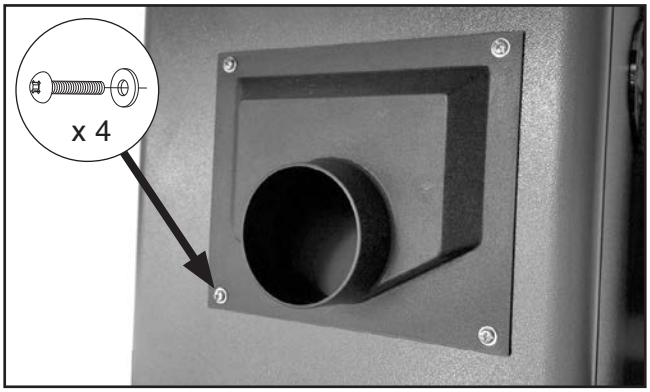

Figure 20. Dust port installed.

20. Slide handwheels onto leadscrews, and secure with pre-installed 5/16"-18 x 1/2" Phillips head screws and 5/16" fender washers (see **Figure 21**).

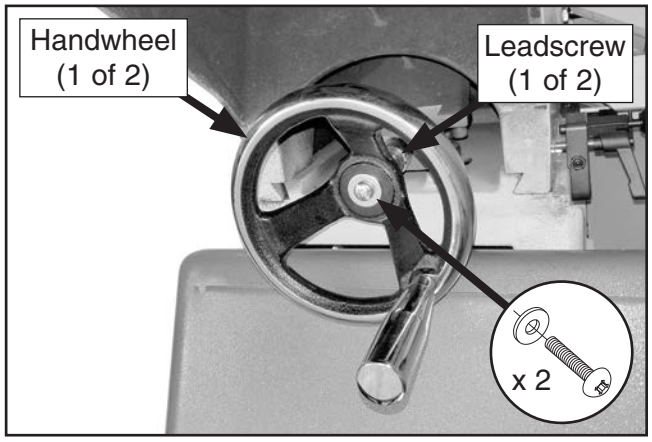

Figure 21. Handwheel secured to leadscrew (1 of 2).

21. Verify outfeed table height is set correctly with knives/inserts at top dead center (TDC) (refer to **Setting Outfeed Table Height** on **Page 47**) and all knives/inserts are securely tightened in cutterhead.

22. Set fence to 90° and move it all the way back.

23. Remove pre-installed button head cap screw and fender washer from bottom of cutterhead guard shaft; then loosen shaft lock and insert shaft into mounting hole, positioned so guard rests against fence.

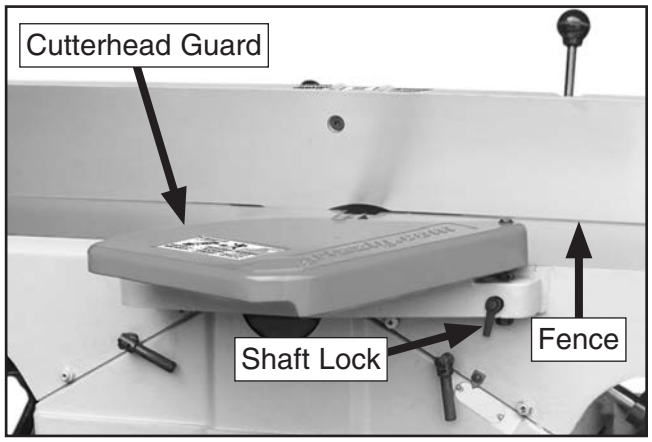

Figure 22. Cutterhead guard installed.

24. Position guard height as low as possible without dragging on infeed table/rabbeting ledge (approximately 1/16" above infeed table), tighten shaft lock to secure setting, then install button head cap screw and fender washer.

⚠WARNING

The cutterhead guard is a critical safety feature of this jointer. You MUST verify its operation before using the jointer! Failure to properly install this guard will greatly increase risk of serious personal injury.

25. Verify proper operation of cutterhead guard by setting fence to 90°, moving fence to rear of table, then pulling cutterhead guard back and letting it go. It should spring back over cutterhead and contact fence without dragging across outfeed table.

— If cutterhead guard does not spring back over cutterhead and contact fence, or if it drags across outfeed table, then it must be adjusted (refer to **Checking/Adjusting Cutterhead Guard** on **Page 53** for instructions).

Knife-Setting Jig (G0855)

Assemble the knife-setting jig (see **Figure 23**) using the knife-setting jig rod, feet, and external retaining rings.

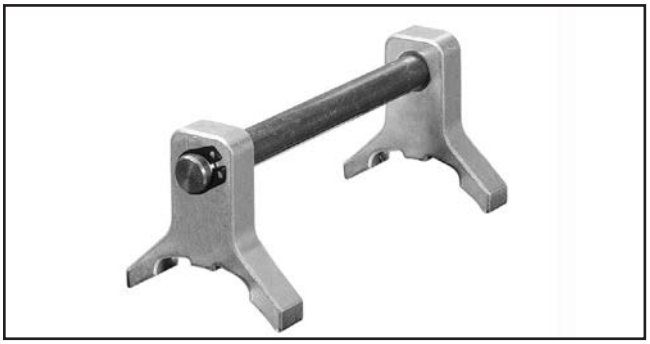

Figure 23. Knife-setting jig assembly (G0855 only).

Dust Collection

⚠CAUTION

This machine creates a lot of wood chips/dust during operation. Breathing airborne dust on a regular basis can result in permanent respiratory illness. Reduce your risk by wearing a respirator and capturing the dust with a dust-collection system.

Recommended CFM at Dust Port: 400 CFM

Do not confuse this CFM recommendation with the rating of the dust collector. To determine the CFM at the dust port, you must consider these variables: (1) CFM rating of the dust collector, (2) hose type and length between the dust collector and the machine, (3) number of branches or wyes, and (4) amount of other open lines throughout the system. Explaining how to calculate these variables is beyond the scope of this manual. Consult an expert or purchase a good dust collection "how-to" book.

To connect dust-collection hose:

1. Fit 4" dust hose over dust port, as shown in **Figure 24**, and secure with a hose clamp.

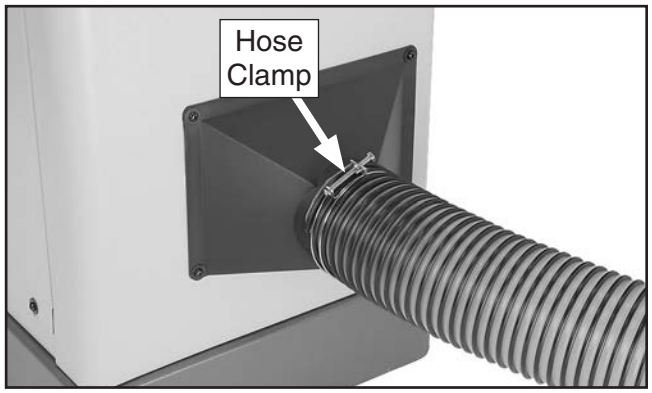

Figure 24. Example of dust hose attached to dust port.

2. Tug hose to make sure it does not come off. A tight fit is necessary for proper performance.

Test Run

Once assembly is complete, test run the machine to ensure it is properly connected to power and safety components are functioning correctly.

If you find an unusual problem during the test run, immediately stop the machine, disconnect it from power, and fix the problem BEFORE operating the machine again. The **Troubleshooting** table in the **SERVICE** section of this manual can help.

The Test Run consists of verifying the motor powers up and runs correctly.

⚠WARNING

Serious injury or death can result from using this machine BEFORE understanding its controls and related safety information. DO NOT operate, or allow others to operate, machine until the information is understood.

⚠WARNING

DO NOT start machine until all preceding setup instructions have been performed. Operating an improperly set up machine may result in malfunction or unexpected results that can lead to serious injury, death, or machine/property damage.

To test run machine:

1. Clear all setup tools away from machine.
2. Connect machine to power supply.
3. Push ON button to start machine. A correctly operating machine runs smoothly with little or no vibration or rubbing noises.
4. Push STOP paddle to stop machine. Congratulations! The Test Run is complete.

Tightening Belt

The final step in the setup process must be done after approximately 16 hours of operation. During this first 16 hours, the belt will stretch and seat into the pulley groove. After this time, you must re-tension the belt to avoid slippage and burn out. Refer to **Page 51** when you are ready to perform this important adjustment.

Note: *Pulleys and belt can get hot. This is a normal condition. Allow them to cool before making adjustments.*

A small amount of black belt dust at the bottom of the belt housing is normal during the life of the machine and does not indicate a problem with the machine or belt.

Disabling & Locking Switch

The switch can be disabled and locked by inserting a padlock through the ON/START button, as shown. Locking the switch in this manner can prevent unauthorized operation of the machine, which is especially important if the machine is not stored inside an access-restricted building.

IMPORTANT: Locking the switch with a padlock only restricts its function. It is not a substitute for disconnecting power from the machine when adjusting or servicing.

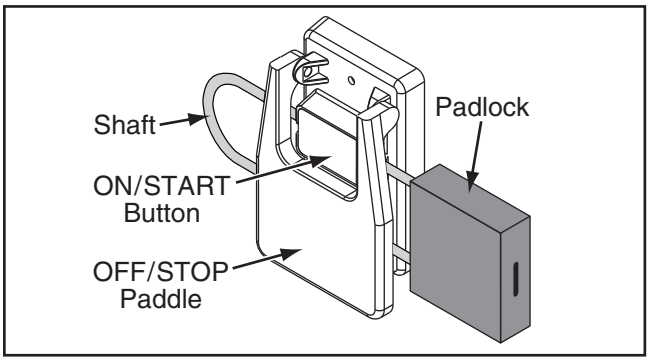

Figure 25. Switch disabled by a padlock.

⚠WARNING

Children or untrained people can be seriously injured by this machine. This risk increases with unsupervised operation. To help prevent unsupervised operation, disable and lock the switch before leaving machine unattended! Place key in a well-hidden or secure location.

NOTICE

The padlock shaft diameter is important to the disabling function of the switch. Use padlocks with a maximum shaft diameter of 4mm. With any padlock used to lock the switch, test the switch after installation to ensure that it is properly disabled.

SECTION 4: OPERATIONS

Operation Overview

The purpose of this overview is to provide the novice machine operator with a basic understanding of how the machine is used during operation, so the machine controls/components discussed later in this manual are easier to understand.

Due to the generic nature of this overview, it is **not** intended to be an instructional guide. To learn more about specific operations, read this entire manual, seek additional training from experienced machine operators, and do additional research outside of this manual by reading "how-to" books, trade magazines, or websites.

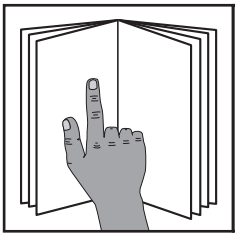

⚠WARNING

To reduce your risk of serious injury, read this entire manual BEFORE using machine.

⚠WARNING

To reduce risk of eye injury from flying chips or lung damage from breathing dust, always wear safety glasses and a respirator when operating this machine.



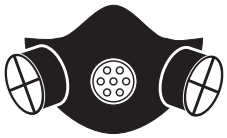

NOTICE

If you are not experienced with this type of machine, WE STRONGLY RECOMMEND that you seek additional training outside of this manual. Read books/magazines or get formal training before beginning any projects. Regardless of the content in this section, Grizzly Industrial will not be held liable for accidents caused by lack of training.

To complete a typical operation with the jointer, the operator does the following:

1. Examines workpiece to verify it is safe and suitable for cutting.
2. Adjusts fence for width of workpiece and locks it in place.
3. Adjusts fence tilt, if necessary.
4. Adjusts infeed table height to set depth of cut per pass.
5. Puts on safety glasses, respirator, and any other required protective equipment.
6. Starts jointer.
7. Using push blocks as needed, holds workpiece firmly against infeed table and fence, and feeds workpiece into cutterhead at a steady and controlled rate until entire length of workpiece has been cut and it clears the cutterhead on the outfeed table side.
8. Repeats cutting process described above until desired results are achieved.
9. Stops jointer.

Stock Inspection & Requirements

Follow these rules when choosing and jointing stock:

- **DO NOT joint or surface plane stock that contains large or loose knots.** Injury to the operator or damage to the workpiece can occur if a knot becomes dislodged during the cutting operation.

- **DO NOT joint or surface plane against the grain direction.** Cutting against the grain increases the likelihood of kickback, as well as tear-out on the workpiece.

- **Jointing and surface planing with the grain produces a better finish and is safer for the operator.** Cutting with the grain is described as feeding the stock on the jointer so the grain points down and toward you as viewed on the edge of the stock (see **Figure** below).

  Note: *If the grain changes direction along the edge of the board, decrease the cutting depth and make additional passes.*

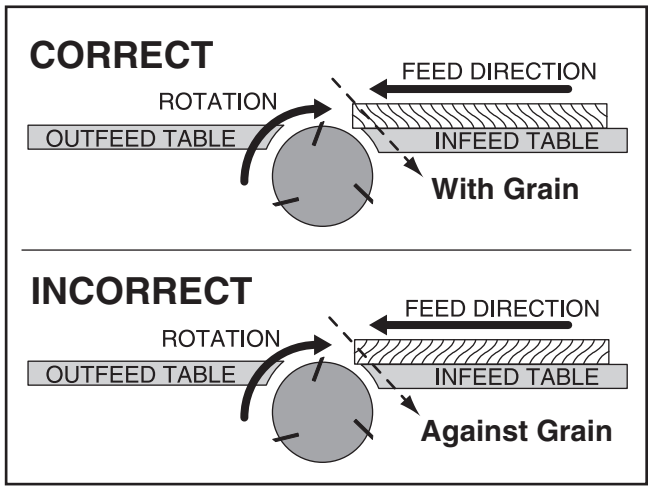

Figure 26. Proper grain alignment with cutterhead.

- **Only cut natural wood.** This jointer is only designed for cutting natural wood stock. Never use it to cut MDF, particle board, plywood, laminates, drywall, backer board, metals, glass, stone, tile, products with lead-based paint, or products that contain asbestos. Cutting these may lead to injury or machine damage.

- **Scrape all glue off the workpiece before jointing.** Glue deposits on the workpiece, hard or soft, will gum up the cutterhead and produce poor results.

- **Remove foreign objects from the workpiece.** Make sure that any stock you process with the jointer is clean and free of dirt, nails, staples, tiny rocks or any other foreign objects that could damage the cutterhead. These particles could also cause a spark as they strike the cutterhead and create a fire hazard.

  IMPORTANT: Wood stacked on a concrete or dirt surface can have small pieces of concrete or stone pressed into the surface.

- **Make sure all stock is sufficiently dried before jointing.** Wood with a moisture content over 20% will cause unnecessary wear on the cutters and poor cutting results. Excess moisture can also hasten rust and corrosion.

⚠WARNING

Make sure your workpiece exceeds the minimum dimension requirements shown below before processing it through the jointer, or the workpiece may break or kick back during the operation.

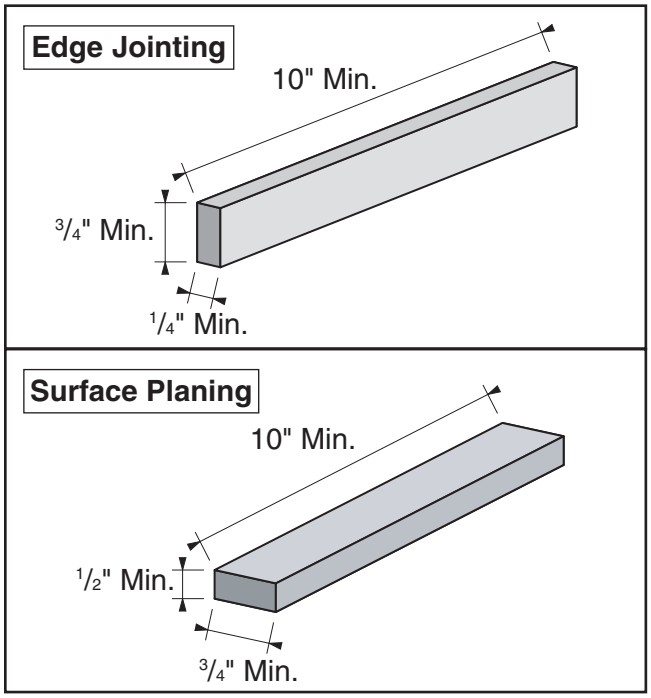

Figure 27. Minimum stock dimensions for jointer.

Squaring Stock

Squaring stock means making it flat and parallel along both length and width, and making the length and width perpendicular to one another.

The purpose of squaring stock is to prepare it for accurate cuts and construction later on.

A properly "squared up" workpiece is essential for tasks such as accurate table saw cuts, glue-ups/laminations, cutting accurate bevels on a bandsaw, and many other applications where one surface of a workpiece is used to reference another.

Items Needed	**Qty**
Jointer	1
Planer	1
Table Saw	1

Squaring stock involves four steps performed in the order below:

1. **Surface Plane on Jointer**—Concave face of workpiece is surface planed flat with jointer.

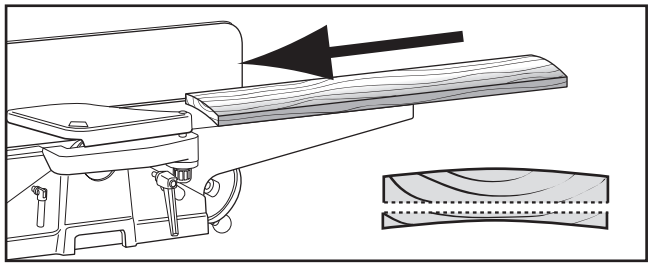

2. **Surface Plane on a Thickness Planer**—Opposite face of workpiece is surface planed flat with a thickness planer.

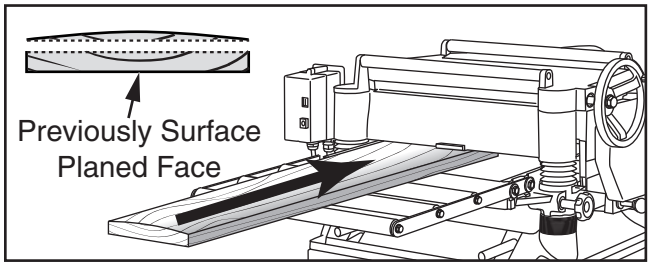

3. **Edge Joint on Jointer**—Concave edge of workpiece is jointed flat with jointer.

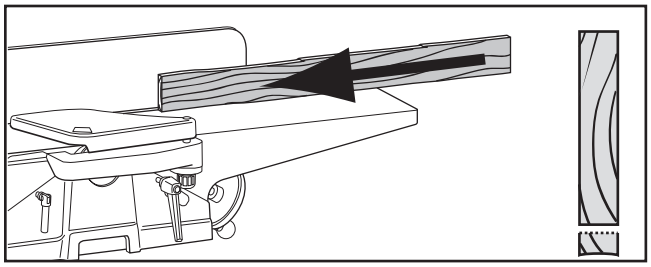

4. **Rip Cut on a Table Saw**—Jointed edge of workpiece is placed against a table saw fence and opposite edge cut off.

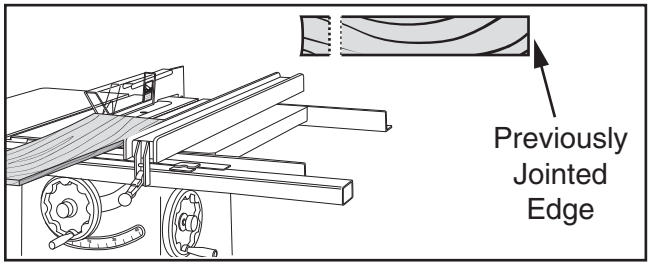

Surface Planing

The purpose of surface planing (see example **Figures** below) on the jointer is to make one flat face on a piece of stock to prepare it for thickness planing on a planer.

⚠WARNING

Failure to use push blocks when surface planing could result in your hands contacting rotating cutterhead, which will cause serious personal injury. ALWAYS use push blocks when surface planing on jointer!

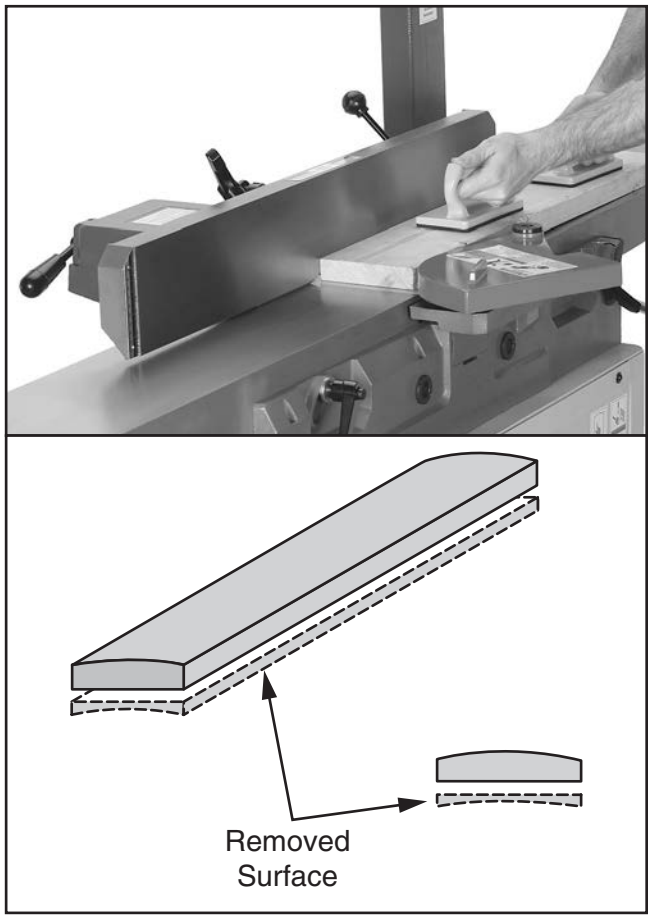

Figure 28. Example photo of a surface planing operation.

To surface plane on jointer:

1. Inspect stock to ensure it is safe and suitable for the operation (see **Stock Inspection & Requirements** section).

2. Set infeed table height to desired cutting depth for each pass.

   ⚠ **CAUTION:** To minimize risk of kickback, do not exceed a cutting depth of 1/16" per pass when surface planing.

3. Set fence to 90°.

4. Start jointer.

5. Place workpiece firmly against fence and infeed table.

   ⚠ **CAUTION:** To ensure workpiece remains stable during cut, concave sides of workpiece must face toward table and fence.

6. Feed workpiece completely across cutterhead while keeping it firmly against fence and tables during the entire cut.

   ⚠ **CAUTION:** Keep hands at least 4" away from cutterhead during the entire cut. Instead of allowing a hand to pass directly over cutterhead, lift it up and over cutterhead, and safely reposition it on the outfeed side to continue supporting workpiece. Use push blocks whenever practical to further reduce risk of accidental hand contact with cutterhead.

7. Repeat **Step 6** until entire surface is flat.

   Tip: *When squaring up stock, cut opposite side of workpiece with a planer instead of the jointer to ensure boths sides are parallel.*

Edge Jointing

Edge jointing (see example **Figures** below) produces a flat and true surface along the side of a workpiece by removing uneven areas. It is an essential step for squaring up warped or rough stock and when preparing a workpiece for joinery or finishing.

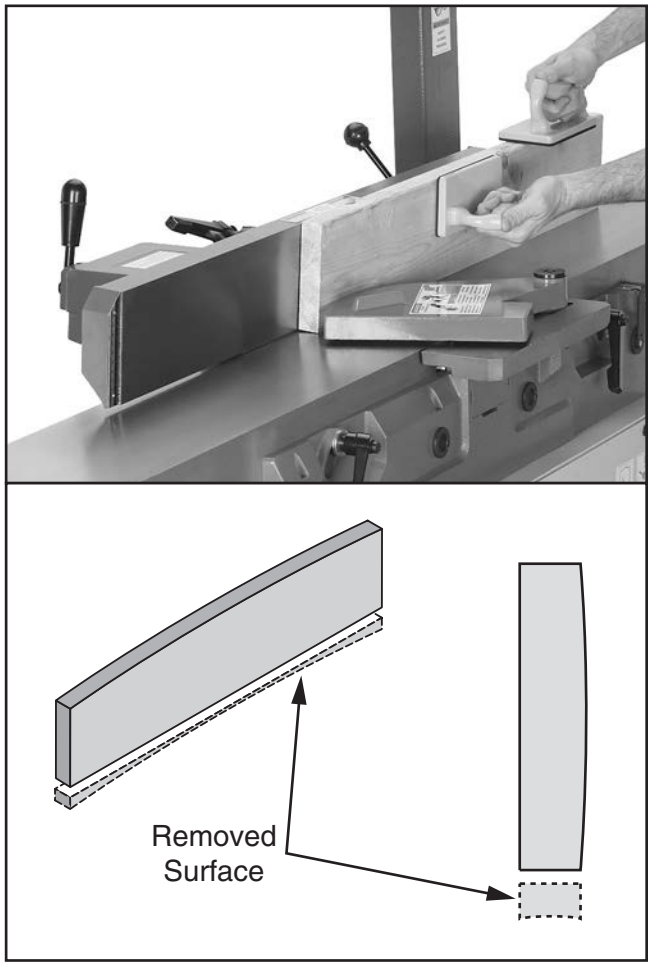

Figure 29. Example photo of an edge jointing operation.

To edge joint on jointer:

1. Inspect stock to ensure it is safe and suitable for the operation (see **Stock Inspection & Requirements** section).

2. Set infeed table height to desired cutting depth for each pass.

   ⚠ **CAUTION:** To minimize risk of kickback, do not exceed a cutting depth of ⅛" per pass.

3. Set fence to 90°.

4. Start jointer.

5. Place workpiece firmly against fence and infeed table.

   ⚠ **CAUTION:** To ensure workpiece remains stable during cut, concave sides of workpiece must face toward table and fence.

6. Feed workpiece completely across cutterhead while keeping it firmly against fence and tables during the entire cut.

   ⚠ **CAUTION:** Keep hands at least 4" away from cutterhead during the entire cut. Instead of allowing a hand to pass directly over cutterhead, lift it up and over cutterhead, and safely reposition it on the outfeed side to continue supporting workpiece. Use push blocks whenever practical to further reduce risk of accidental hand contact with cutterhead.

7. Repeat **Step 6** until the entire edge is flat.

   Tip: *When squaring up stock, cut opposite edge of workpiece with a table saw instead of the jointer—otherwise, both edges of workpiece will not be parallel with each other.*

Bevel Cutting

Bevel cuts (see example **Figures** below) can be made by setting the fence at the desired angle and feeding the workpiece firmly along the fence face, with the bottom inside corner firmly against the table. The cutting process typically requires multiple passes or cuts to bevel the entire edge of a workpiece.

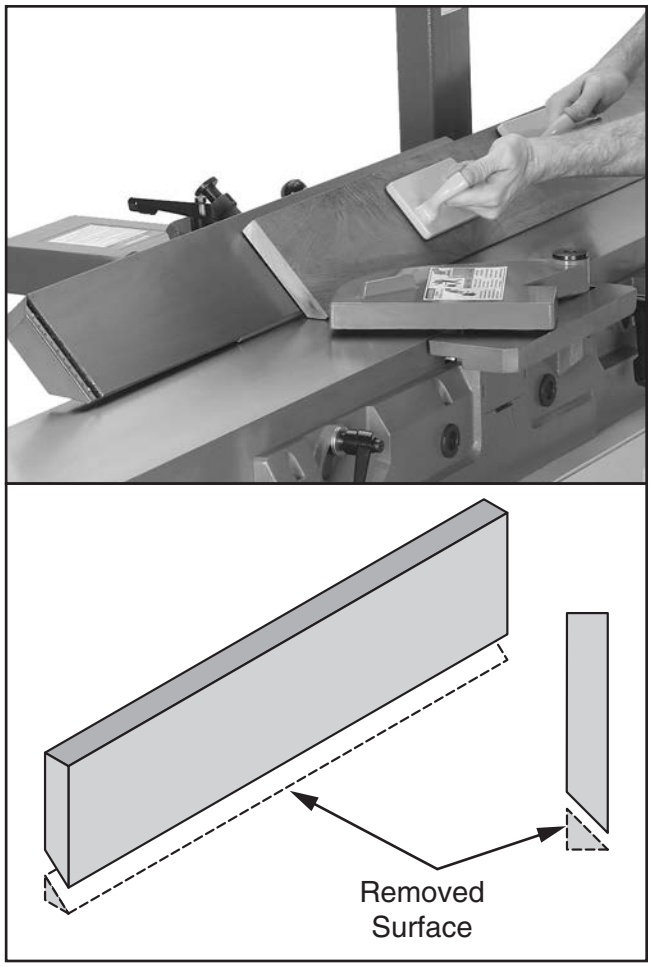

Figure 30. Example of fence set up for a bevel cut of 45°.

To bevel cut on jointer:

1. Inspect stock to ensure it is safe and suitable for the operation (see **Stock Inspection & Requirements** section).

2. Set infeed table height to cutting depth desired for each pass.

   ⚠ **CAUTION:** Cutting depth for bevel cuts is typically between 1/16" and 1/8", depending on hardness and width of stock.

3. Set fence tilt to desired angle of cut.

4. Place workpiece against fence and infeed table with concave side face down.

5. Start jointer.

6. With a push block in your leading hand, press workpiece against table and fence with firm pressure, and feed workpiece over cutterhead with a push block in your trailing hand.

   ⚠ **CAUTION:** When your leading hand gets within 4" of the cutterhead, lift it up and over cutterhead, and place push block on portion of the workpiece once it is 4" past cutterhead. Now, focus your pressure on outfeed end of the workpiece while feeding, and repeat same action with your trailing hand when it gets within 4" of cutterhead. To help keep your hands safe, DO NOT let them get closer than 4" from moving cutterhead at any time during operation!

7. Repeat cutting process, as necessary, until you are satisfied with the results.

Rabbet Cutting

A rabbet cut removes a portion of a workpiece edge, so it fits together with an opposing, equally sized rabbet cut on another workpiece (see example **Figure** below). This is a classic method of joining two workpieces that is simple, yet strong.

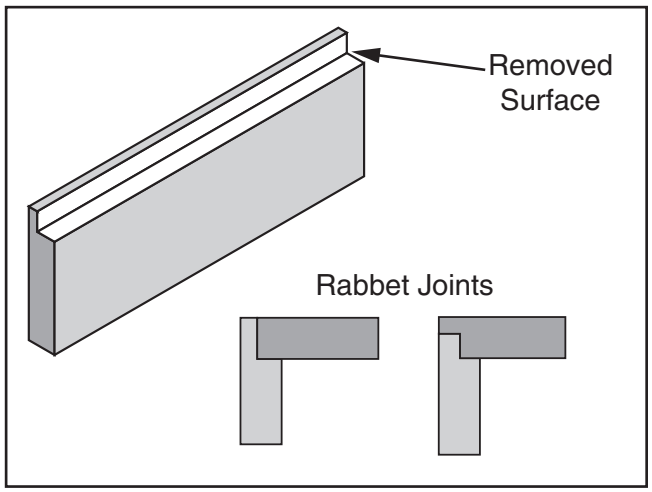

This jointer can be used to make high-quality rabbet cuts, but there are some situations—whether it is due to an excessively large/small workpiece size or rabbet cutting width/depth—when it will not be safe or appropriate for making the rabbet cut on this jointer. In these cases, you need to use another tool or method for rabbet cutting that will be a safer alternative.

A rabbet cut can alternatively be made using a table saw, router, or even a hand saw. As with any type of cutting operation, always consider your safety first and use good judgement!

Typically, rabbet cutting with a jointer requires the cutterhead guard to be removed first, so the workpiece can slide along the rabbeting ledge during the cut. However, it is possible to make rabbet cuts with workpieces up to 1" thick without removing the cutterhead guard. This is done by performing the rabbet cut with the workpiece on end (similar to when you are edge jointing).

To rabbet cut on jointer:

1. Inspect stock to ensure it is safe and suitable for the operation (see **Stock Inspection & Requirements** section).

2. Set infeed table height to desired cutting depth for each pass.

   ⚠ **CAUTION:** For safety reasons, cutting depth should never exceed ⅛" per pass.

3. Remove cutterhead guard if necessary to perform operation (see **Figures** below.)

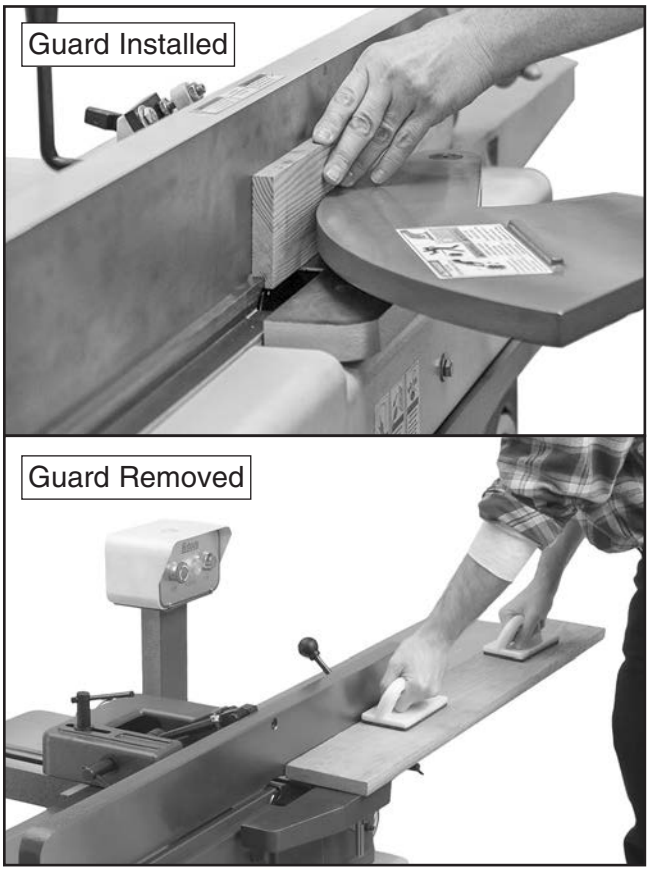

Figure 31. Examples of typical rabbet cutting operations.

⚠WARNING

When cutterhead guard is removed, attempting any other cut besides a rabbet directly exposes operator to moving cutterhead. To minimize risk of injury and unnecessary exposure to cutterhead, always keep cutterhead guard installed when possible, and ALWAYS immediately replace it after performing rabbet cuts.

4. Set fence to 90° and near front of jointer, so amount of exposed cutterhead in front of fence matches size of desired rabbet.

5. Start jointer.

6. Place workpiece firmly against fence and infeed table.

   ⚠ **CAUTION:** To ensure workpiece remains stable during cut, concave sides of workpiece must face toward table and fence.

7. Feed workpiece completely across cutterhead while keeping it firmly against fence and tables during entire cut.

   ⚠ **CAUTION:** Keep hands at least 4" away from cutterhead during the entire cut. Instead of allowing a hand to pass directly over cutterhead, lift it up and over cutterhead, and safely reposition it on the outfeed side to continue supporting workpiece. Use push blocks whenever practical to further reduce risk of accidental hand contact with cutterhead.

8. Repeat **Step 7** until rabbet is cut to depth.

9. Re-install cutterhead guard if removed in **Step 3**.

Setting Depth of Cut

The depth of cut on a jointer affects the amount of material removed from the bottom of the workpiece as it passes over the cutterhead.

The depth of cut is set by adjusting the height of the infeed table relative to the outfeed table and cutterhead knives/inserts at top dead center (TDC).

This jointer is equipped with a ⅛" depth stop. This prevents the table from accidently being lowered below ⅛", which is the maximum depth of cut.

⚠CAUTION

DO NOT exceed ⅛" depth of cut per pass when edge jointing and 1/16" depth of cut per pass when surface planing on this machine or kickback and serious injury may occur!

Adjusting Infeed Table Height

To adjust the infeed table height, loosen the infeed table lock (see **Figure 32**), rotate the infeed table handwheel to raise or lower the table, and then tighten the lock to secure the setting.

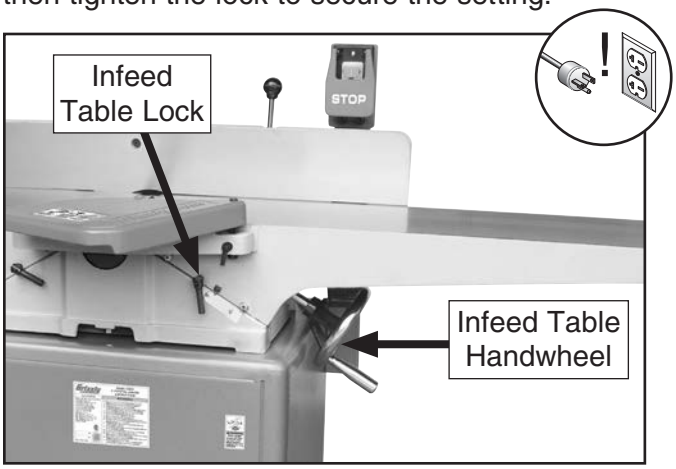

Figure 32. Infeed table height controls.

To lower the infeed table below the 1/8" depth stop, pull the release knob (see **Figure 33**), adjust the table height, and then tighten the lock to secure the setting.

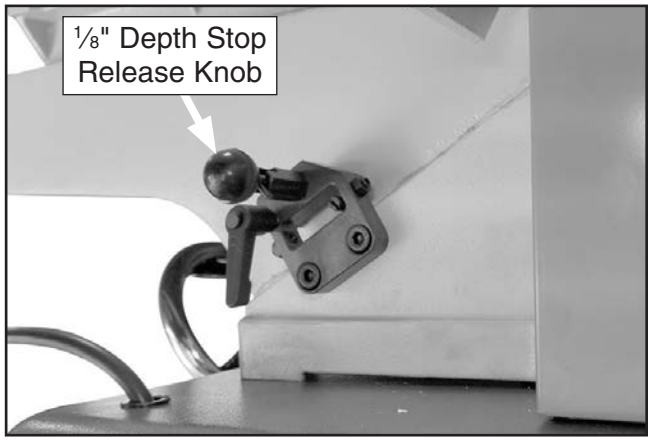

Figure 33. Infeed table height controls.

Depth-of-Cut Scale

The depth of cut can be referenced directly from the depth scale located on the front of the jointer (see **Figure 34**).

Note: *The depth scale can be calibrated or "zeroed" if it is not correct. (Refer to **Calibrating Depth-of-Cut Scale** on **Page 50**.)*

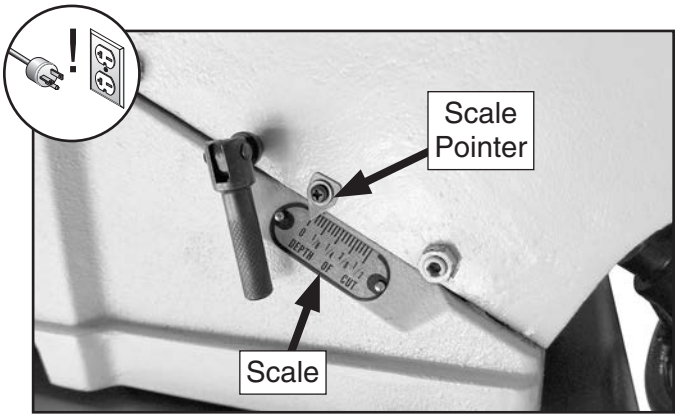

Figure 34. Depth-of-cut scale components.

Infeed Positive Stops

The infeed table has positive-stop screws (see **Figure 35**) that allow you to quickly adjust the infeed table between finish/final cuts and shaping/heavy cuts and the maximum depth of cut of 1/2" (or less) when rabbeting.

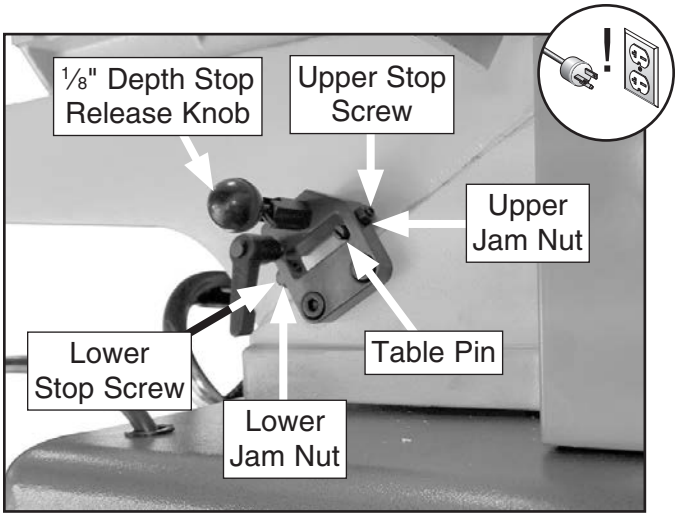

Figure 35. Positive-stop components for infeed table.

Each positive-stop screw controls top or bottom range of table movement. Jam nuts lock positive-stop screws in position so they will not move during operation.

We recommend setting the bottom height stop screw at 1/2". The top height stop can be set anywhere between 0" and 1/16". The 1/8" depth stop is factory set and cannot be adjusted.

Item(s) Needed	Qty
Wrench 13mm	1
Hex Wrench 4mm	1

To adjust infeed positive-stop screws:

1. DISCONNECT MACHINE FROM POWER!

2. Loosen jam nuts on both stop screws (see **Figure 35**).

3. Raise table to minimum desired depth of cut, then tighten upper stop screw (see **Figure 35**) until it contacts table. Tighten jam nut to secure stop screw in position.

4. Lower table to maximum desired depth of cut, then tighten lower stop screw until it contacts table. Tighten jam nut to secure stop screw in position.

   Note: *If you need to lower the infeed table more than 1/8", then pull and hold the 1/8" depth stop release knob (see **Figure 35**) while lowering infeed table.*

SECTION 5: ACCESSORIES

WARNING

Installing unapproved accessories may cause machine to malfunction, resulting in serious personal injury or machine damage. To reduce this risk, only install accessories recommended for this machine by Grizzly.

NOTICE

Refer to our website or latest catalog for additional recommended accessories.

D4206—Clear Flexible Hose 4" x 10'
D4256—45° Elbow 4"
D4216—Black Flexible Hose 4" x 10'
W1034—Heavy-Duty Clear Flex Hose 4" x 10'
D2107—Hose Hanger 4¼"
W1015—Y-Fitting 4" x 4" x 4"
W1017—90° Elbow 4"
W1019—Hose Coupler (Splice) 4"
W1317—Wire Hose Clamp 4"
W1007—Plastic Blast Gate 4"
W1053—Anti-Static Grounding Kit
We've hand picked a selection of commonly used dust collection components for machines with 4" dust ports.



Figure 36. Dust collection accessories.

H7654—8" Indexable Spiral Cutterhead
These cutterheads replace the standard straight-knife cutterheads on our Grizzly jointers and planers.



Figure 37. H7654 8" Indexable Spiral Cutterhead for Model G0855.

H9893—Indexable Carbide Inserts, 10 Pk.
15 x 15 x 2.5mm replacement indexable carbide inserts.

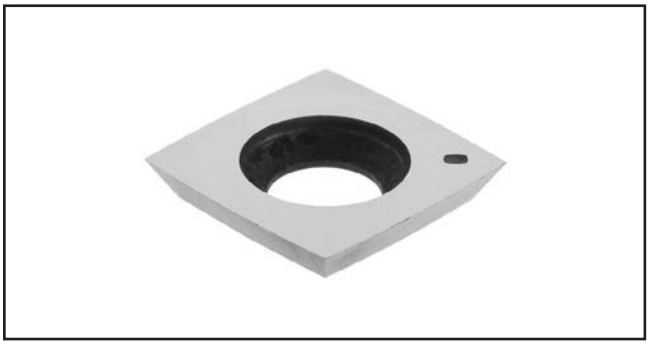

Figure 38. H9893 Indexable Carbide Inserts for G0856.

H4982—HSS Jointer Knives, 4 Pk.
8" x ¾" x ⅛" replacement HSS jointer knives.

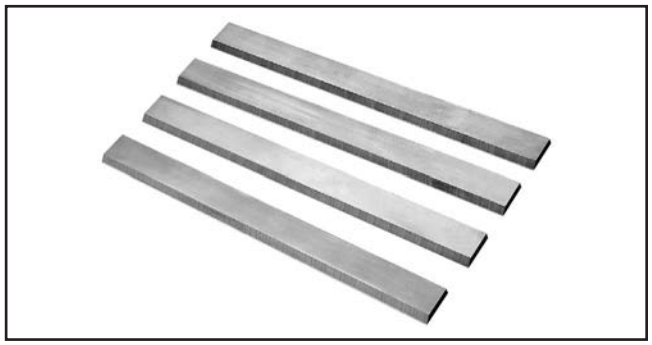

Figure 39. H4982 Jointer Knives for Model G0855.

W1211A—Jointer Pal® Magnetic Knife Gauge (For HSS & Cobalt Knives)
This magnetic knife-setting system lets you set jointer knives in perfect alignment every time!



Figure 40. W1211A Jointer Pal® Knife Gauge.

D1123—Jointer/Planer Knife Hone
This handy tool sharpens flat and beveled surfaces quickly and easily. Great for touch-ups.

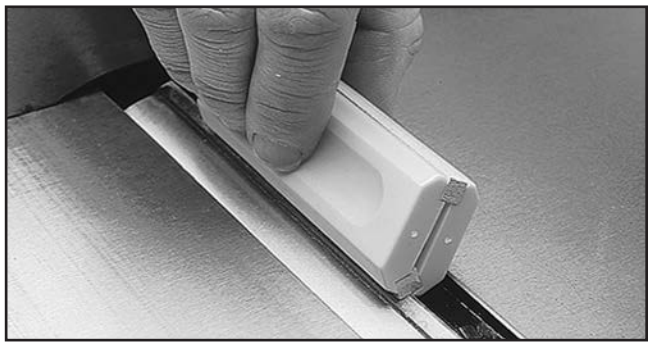

Figure 41. Jointer knife hone.

H2499—Small Half-Mask Respirator
H3631—Medium Half-Mask Respirator
H3632—Large Half-Mask Respirator
H3635—Cartridge Filter Pair P100
If you work around dust everyday, a half-mask respirator can be a lifesaver. Also compatible with safety glasses!

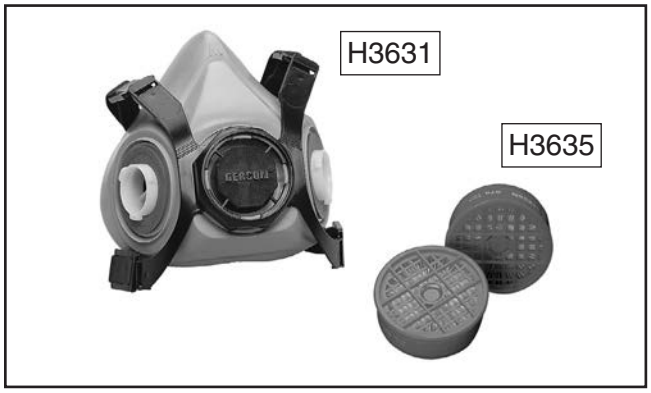

Figure 42. Half-mask respirator with disposable cartridge filters.

Basic Eye Protection

T20501—Face Shield Crown Protector 4"
T20502—Face Shield Crown Protector 7"
T20503—Face Shield Window
T20451—"Kirova" Clear Safety Glasses
T20452—"Kirova" Anti-Reflective S. Glasses
T20456—DAKURA Safety Glasses



Figure 43. Assortment of basic eye protection.

SECTION 6: MAINTENANCE

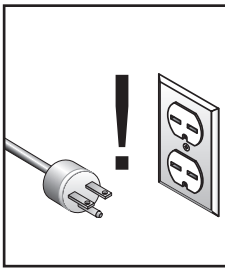

⚠WARNING

To reduce risk of shock or accidental startup, always disconnect machine from power before adjustments, maintenance, or service.

Schedule

For optimum performance from this machine, this maintenance schedule must be strictly followed.

Ongoing

To maintain a low risk of injury and proper machine operation, if you ever observe any of the items below, shut down the machine immediately and fix the problem before continuing operations:

- Loose mounting bolts.
- Dust or debris on and around machine.
- Dull or damaged cutterhead knives/inserts.
- Unprotected cast-iron surfaces.
- Worn or damaged wires.
- Any other unsafe condition.

Monthly Check

- Clean and lubricate table ways, leadscrews, and fence pivot points (**Page 38**).
- V-belt tension, damage, or wear.
- Clean/vacuum dust buildup from inside stand and off of motor.

TT27914—Moly-D Machine & Way Oil ISO 68



Figure 44. T27914 Moly-D Machine & Way Oil.

Cleaning & Protecting

The cleaning process for this machine is simple. Vacuum excess wood chips and sawdust, and wipe off the remaining dust with a dry cloth. If any resin has built up, use a resin dissolving cleaner to remove it. Treat all unpainted cast iron and steel with a non-staining lubricant after cleaning.

Protect the unpainted cast iron surfaces on the table by wiping the table clean after every use—this ensures moisture from wood dust does not remain on bare metal surfaces.

Keep tables rust-free with regular applications of products like G96® Gun Treatment, SLIPIT®, or Boeshield® T-9.

G5562—SLIPIT® 1 Qt. Gel
G5563—SLIPIT® 12 Oz. Spray
G2871—Boeshield® T-9 12 Oz. Spray
G2870—Boeshield® T-9 4 Oz. Spray
H3788—G96® Gun Treatment 12 Oz. Spray
H3789—G96® Gun Treatment 4.5 Oz. Spray



Figure 45. Recommended products for protecting unpainted cast-iron and steel.

Lubrication

Since all bearings are sealed and permanently lubricated, simply leave them alone until they need to be replaced. DO NOT lubricate them.

It is essential to clean components before lubricating them because dust and chips build up on lubricated components and make them hard to move. Simply adding more grease to them will not yield smooth moving components.

Item(s) Needed:	Qty
Pump-Type Oil Can	1
Mineral Spirits	As Needed
Clean Shop Rags	As Needed

Fence & Carriage

Oil Type .... Grizzly T27914 or ISO 68 Equivalent
Oil Amount.....1–2 Drops
Lubrication Frequency.... Monthly, or As Needed

Clean fence pivot points and carriage ways (see **Figure 46**) with mineral spirits and shop rags, allow to dry, then lubricate with light machine oil. Wipe off excess oil.

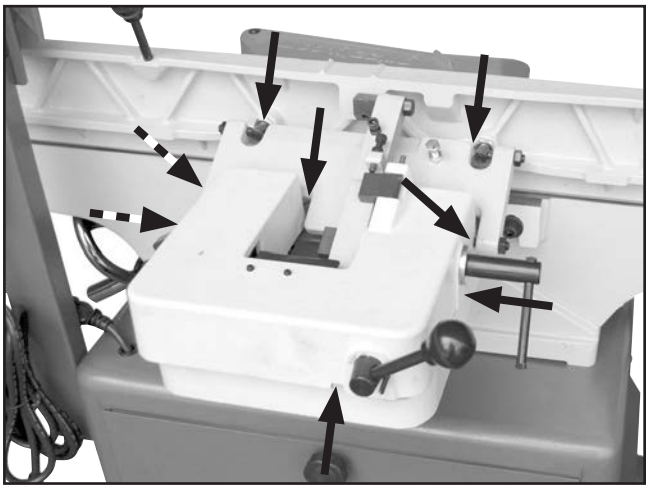

Figure 46. Fence and carriage lubrication locations.

Leadscrews

Oil Type .... Grizzly T27914 or ISO 68 Equivalent
Oil Amount.....1–2 Drops
Frequency..... Monthly, or As Needed

Clean leadscrews (see **Figure 47**) with mineral spirits and shop rags, allow to dry, then lubricate with light machine oil. Wipe off excess oil.

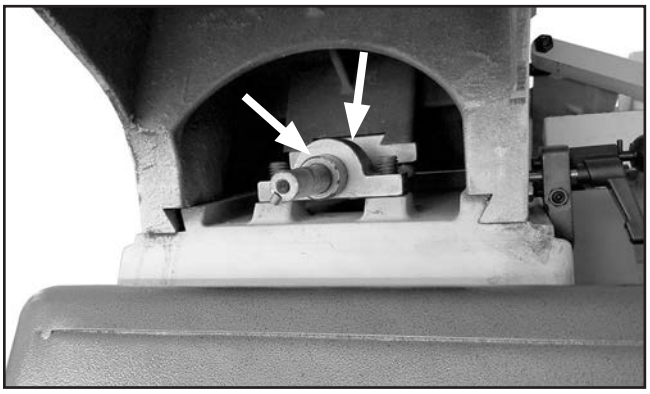

Figure 47. Leadscrew lubrication locations (handwheel removed for clarity).

Table Ways

Oil Type .... Grizzly T27914 or ISO 68 Equivalent
Oil Amount.....1–2 Drops
Lubrication Frequency.... Monthly, or As Needed

Lower infeed and outfeed tables to access ways. Clean ways with mineral spirits and shop rags, allow to dry, then lubricate with light machine oil at top of each way (see **Figure 48**). Move tables up and down to distribute oil. Wipe off excess oil.

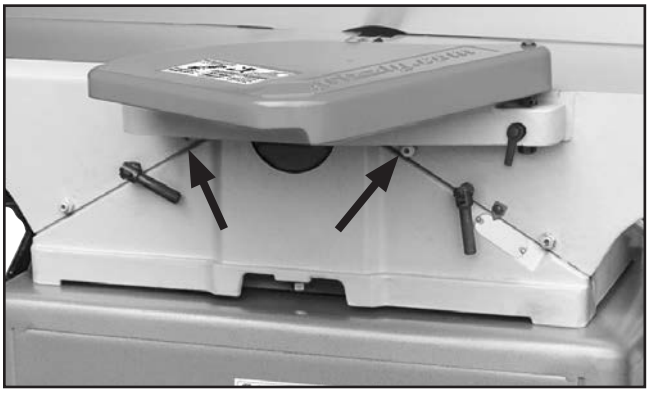

Figure 48. Location to lubricate table ways.

SECTION 7: SERVICE

Review the troubleshooting procedures in this section if a problem develops with your machine. If you need replacement parts or additional help with a procedure, call our Technical Support. **Note:** *Please gather the serial number and manufacture date of your machine before calling.*

Troubleshooting

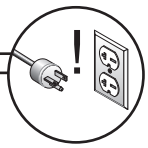

Motor & Electrical

Symptom	Possible Cause	Possible Solution
Machine does not start or a breaker trips immediately after startup.	1. Incorrect power supply voltage/circuit size. 2. Power supply circuit breaker tripped/fuse blown. 3. Motor wires connected incorrectly. 4. Wiring open/has high resistance. 5. ON button at fault. 6. Start capacitor at fault. 7. Centrifugal switch at fault. 8. Motor at fault.	1. Ensure correct power supply voltage/circuit size. 2. Ensure circuit is sized correctly and free of shorts. Reset circuit breaker or replace fuse. 3. Correct motor wiring connections (**Page 54**). 4. Check/fix broken, disconnected, or corroded wires. 5. Test/replace switch. 6. Test/replace capacitor. 7. Adjust/replace centrifugal switch if available. 8. Test/repair/replace.
Machine stalls or is underpowered.	1. Workpiece material not suitable. 2. Excessive feed rate. 3. Excessive depth of cut. 4. Dull knives/inserts. 5. Belt slipping or pulleys misaligned. 6. Dust collection blockage. 7. Motor overheated. 8. Pulley slipping on shaft. 9. Run capacitor at fault. 10. Centrifugal switch at fault. 11. Motor bearings at fault. 12. Motor at fault.	1. Ensure workpiece is suitable for jointing (**Page 27**). 2. Reduce feed rate. 3. Reduce depth of cut (**Page 33**). 4. Sharpen/replace knives (**Page 42**); rotate/replace inserts (**Page 44**). 5. Tension/replace belt (**Page 51**); ensure pulleys are aligned (**Page 52**). 6. Clear blockages, seal leaks, use smooth wall duct, eliminate bends, close other branches. 7. Clean motor, let cool, and reduce workload. 8. Tighten/replace loose pulley/shaft, replace shaft key; tighten pulley set screw. 9. Test/repair/replace. 10. Adjust/replace centrifugal switch if available. 11. Test/repair/replace. 12. Test/repair/replace.
Machine has vibration or noisy operation.	1. Mobile base lock knobs loose or stand feet not adjusted properly. 2. Motor or other component loose. 3. Belt worn or loose. 4. Motor fan rubbing on fan cover. 5. Pulley loose or misaligned. 6. Dull knives/inserts. 7. Cutterhead bearings at fault. 8. Centrifugal switch at fault. 9. Motor bearings at fault.	1. Tighten mobile base lock knobs or adjust stand feet to stabilize machine. 2. Replace missing bolts/nuts, or tighten if loose. 3. Inspect/tension or replace belt (**Page 51**). 4. Fix/replace fan cover; replace loose/damaged fan. 5. Secure pulley on shaft or realign (**Page 52**). 6. Sharpen/replace knives (**Page 42**); rotate/replace inserts (**Page 44**). 7. Replace bearing(s). 8. Adjust/replace centrifugal switch if available. 9. Test/repair/replace.

Machine Operation

Symptom	Possible Cause	Possible Solution
Table is hard to adjust.	1. Table lock engaged/partially engaged. 2. Table stop blocking movement. 3. Table gibs out of adjustment.	1. Completely loosen table lock (**Page 5**). 2. Loosen/reset table stop (**Page 34**). 3. Adjust table gibs (**Page 45**).
Excessive snipe (gouge in end of board that is uneven with rest of cut).	1. Outfeed table set too low. 2. Knives set too high (G0855). 3. Operator pushing down on trailing end of workpiece as it leaves cutterhead.	1. Align outfeed table with cutterhead knife/insert at top dead center (**Page 47**). 2. Adjust height of knives evenly with outfeed table (**Page 42**). 3. Reduce/eliminate downward pressure on trailing end of workpiece as it leaves cutterhead.
Workpiece stops in middle of cut.	1. Outfeed table set too high.	1. Align outfeed table with cutterhead knife/insert at top dead center (**Page 47**).
Workpiece chipping, tear-out, indentations, or overall rough cuts.	1. Workpiece not suitable for jointing. 2. Operator not feeding workpiece to cut "with" the grain. 3. Feed rate too fast. 4. Excessive depth of cut. 5. Dull knives/inserts. 6. Dust collection problems.	1. Ensure workpiece is suitable for jointing (**Page 27**). 2. Turn workpiece 180° before feeding again. 3. Reduce feed rate. 4. Reduce depth of cut. 5. Sharpen/replace knives (**Page 42**); rotate/replace inserts (**Page 44**). 6. Clear blockages, seal leaks, move machine closer to dust collector, upgrade dust collector.
Fuzzy grain left in workpiece.	1. Wood has high moisture content. 2. Dull knives/inserts.	1. Ensure wood moisture content is less than 20%. Allow to dry if necessary. 2. Sharpen/replace knives (**Page 42**); rotate/replace inserts (**Page 44**).
Long lines or ridges that run along length of workpiece.	1. Nicked or chipped knives/inserts. 2. Inserts not consistently tightened/torqued (G0856). 3. Dirt or debris under inserts (G0856).	1. Replace knives (**Page 42**); rotate/replace inserts (**Page 44**). 2. Tighten/torque all inserts consistently when rotating/replacing (**Page 44**). 3. Remove inserts, properly clean mounting pocket and re-install (**Page 44**).
Uneven cutter marks, wavy surface, or chatter marks across face of workpiece.	1. Feeding workpiece too fast. 2. Knives not properly adjusted (G0855). 3. Dirt or debris under inserts (G0856).	1. Reduce feed rate. 2. Properly adjust knives (**Page 42**). 3. Remove inserts, properly clean mounting pocket, and re-install (**Page 44**).
Glossy surface; scorching or burn marks on workpiece.	1. Feed rate too slow. 2. Dull knives/inserts.	1. Increase feed rate. 2. Sharpen/replace knives (**Page 42**); rotate/replace inserts (**Page 44**).
Workpiece is concave or convex along its length after jointing.	1. Workpiece not held with even pressure against outfeed table during cut. 2. Workpiece excessively bowed or warped, not suitable for jointing. 3. Tables are not parallel with cutterhead and each other.	1. Apply even downward pressure against workpiece through entire travel along outfeed side during cut. 2. Ensure workpiece is suitable for jointing (**Page 27**). 3. Check/Adjust table parallelism (**Page 46**).
Workpiece edges not square; tapered cut produced.	1. Fence not square to table(s); fence tilt unlocked. 2. Inserts not consistently tightened/torqued. 3. Warped infeed or outfeed table.	1. Square fence to table(s) (**Page 48**); lock fence. 2. Tighten/torque all inserts consistently when rotating/replacing (**Page 44**). 3. Regrind/replace table.

Setting/Replacing Knives (G0855)

Setting the knives correctly is crucial to the proper operation of the jointer and it plays an important role in keeping the knives sharp. If one knife is higher than the others, it will do the majority of the work, and thus, become dull much faster.

The cutterhead on this jointer comes with both jack screws and springs for setting knife height. Which one you choose is a matter of personal preference. However, *only one of these options is needed to set the knives*.

There are two options for setting the knives—the straightedge method and the knife-setting jig method. Each option has advantages and disadvantages; the correct one for you will be a matter of personal preference. For best results, the tables must be parallel with each other (refer to **Checking/Adjusting Table Parallelism**) and the outfeed table height must be properly set (refer to **Setting Outfeed Table Height**).

Straightedge Method

A high quality straightedge (or Jointer Pal) is held flat against the outfeed table and the knife heights are set to the bottom of the straightedge, as shown. Because the knife projection height from the cutterhead is dependent on the outfeed table height, the outfeed table must be set as described in **Setting Outfeed Table Height** for this method to work correctly.

When using the straightedge method to set the knives, you will not need to move the outfeed table once it is set and you will always be assured that the knives are even with the outfeed table in their highest point of rotation (TDC)—even if the cutterhead is not perfectly parallel with the outfeed table.

Item(s) Needed	Qty
Precision Straightedge or Knife-Setting Jig	1
Hex Wrench 3mm	1
Open-End Wrench 10mm	1

To check knife height with a straightedge:

1. DISCONNECT MACHINE FROM POWER!
2. Remove cutterhead guard or block it open.
3. Using a straightedge on outfeed table, check height of each knife at positions as shown.

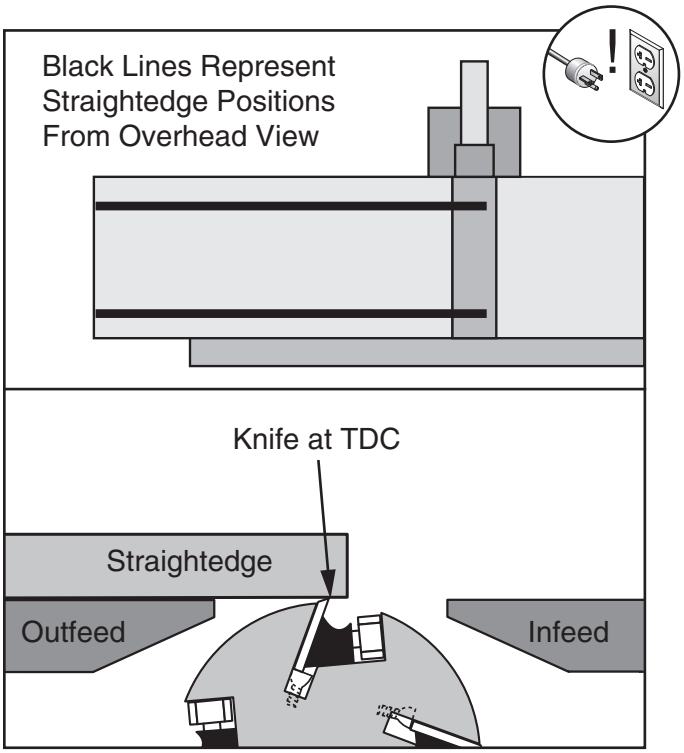

Figure 49. Setting knife height with a straightedge.

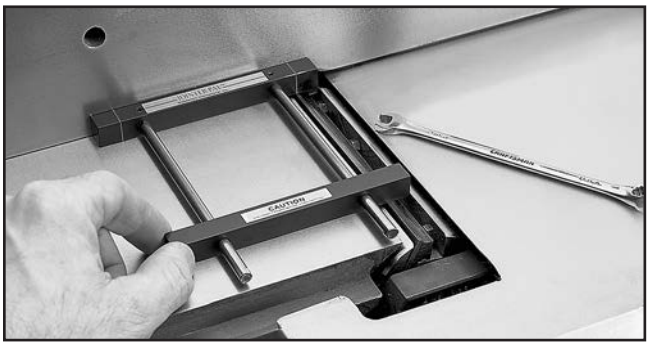

Figure 50. Setting knife height with a Jointer Pal®.

— Knives are set correctly when they just touch bottom of straightedge at TDC in each of straightedge positions.

— If knives do not touch straightedge or they lift up at any position, then those knives need to be adjusted (refer to **Setting/Replacing Knives** on **Page 42**).

Knife-Setting Jig Method

The infeed table is lowered to fit the jig on the cutterhead, as shown, and the knife heights are set to just touch the middle pad of the jig. The knife-setting jig included with the jointer is designed to set all the knives evenly and at the correct height in the cutterhead.

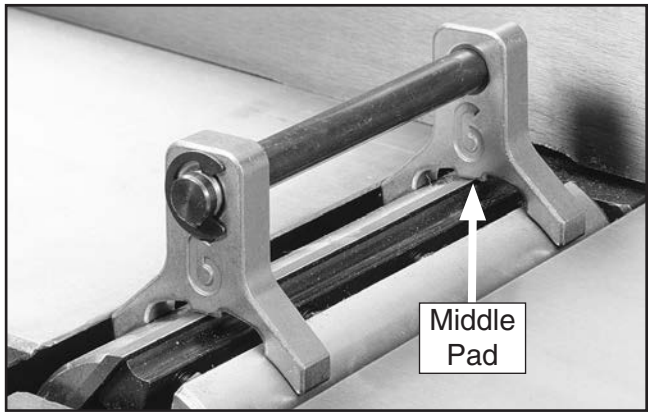

Figure 51. Example of knife-setting jig positioned over cutterhead knife.

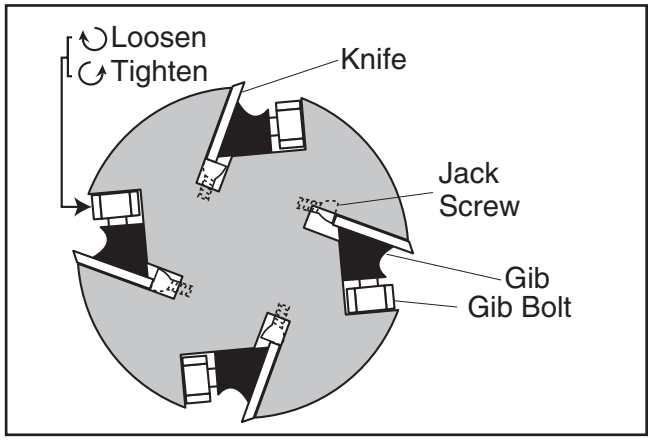

Figure 52. Cutterhead profile diagram.

To check knife height with a knife-setting jig:

1. DISCONNECT MACHINE FROM POWER!
2. Remove cutterhead guard or block it open.
3. Lower infeed table to ½" scale mark.
4. Place knife jig on cutterhead, directly over a knife.
5. Closely examine how jig touches cutterhead and knife. Knife is set correctly when, on each side of cutterhead, both legs of jig sit firmly on cutterhead body and middle pad of jig just touches top edge of knife.

   — If jig does not sit as described, then that knife must be reset. Repeat this inspection with other knives before resetting. (Refer to **Setting/Replacing Knives** section below.)

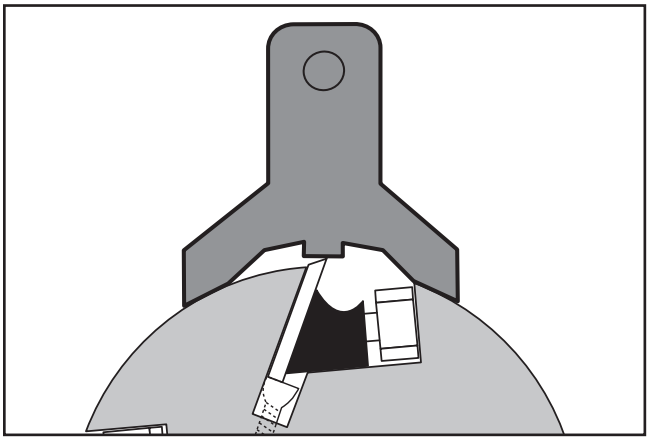

Figure 53. Using knife-setting jig to set knife height.

Setting/Replacing Knives

1. DISCONNECT MACHINE FROM POWER!
2. Remove cutterhead guard from table and lower infeed table to ½" on depth-of-cut scale. This will provide unrestricted access to cutterhead.
3. Remove cabinet rear access panel to expose cutterhead pulley.
4. Rotate cutterhead pulley to provide good access to cutterhead knives.

5. Loosen cutterhead gib bolts, starting in the middle, and alternating back and forth until all gib bolts are loose, but not falling out.

   The first time you set or replace a knife, remove the gib and knife from cutterhead. Clean gib and clean inside cutterhead slot to remove all pitch or sawdust. Coat knife and gib with a metal protectant.

6. Position knife jig over knife. Loosen gib bolts until knife is completely loose.

7. **Jack Screws**—Access jack screws through holes in cutterhead (see **Figure** below). Using a hex wrench, rotate jack screws to raise or lower knife. When knife is set correctly, it will barely touch the bottom of the straightedge or the middle pad of the knife jig. Snug gib bolts just tight enough to hold knife in place. Repeat with remaining knives.

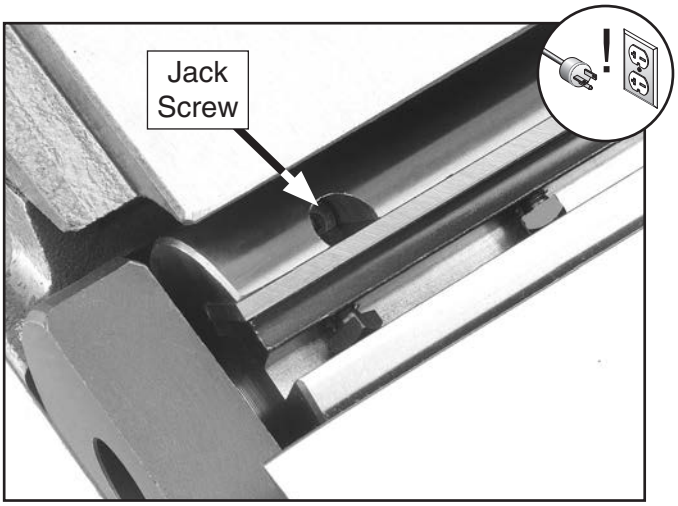

Figure 54. Location of jack screw access hole.

   Springs—Push knife down with straightedge or middle pad of knife-setting jig (see **Figure** below). Keep straightedge flat against outfeed table. If using jig, keep feet pressed evenly against cutterhead. Tighten gib bolts just enough to hold knife in place. Repeat with remaining knives.

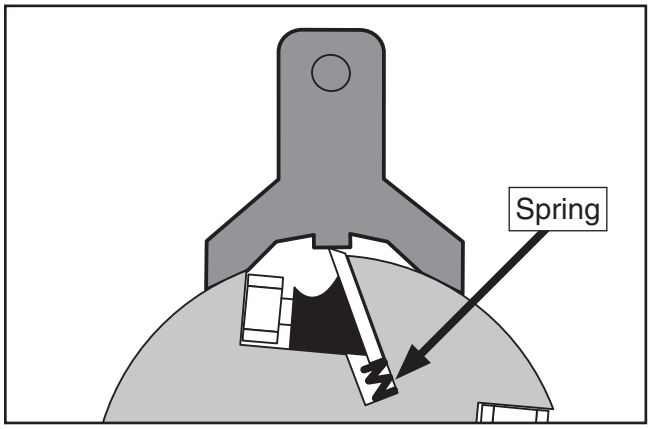

Figure 55. Location of spring.

8. Rotate cutterhead to reveal the first knife you started with. Lightly snug all gib bolts, alternating from one side to the other, and working from the ends to the middle. Repeat with remaining knives.

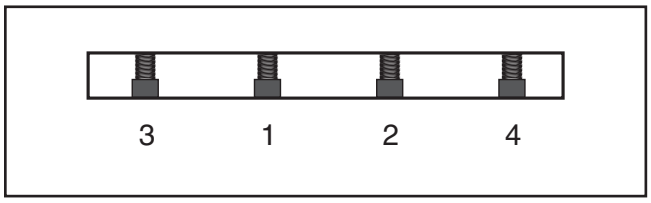

Figure 56. Gib bolt tightening sequence.

9. Tighten each gib bolt in the same alternating manner as you did in the previous step.

10. Make sure outfeed table is set even with the new knives at top dead center.

11. Replace cutterhead guard and cabinet rear access panel.

Rotating/Replacing Helical Cutterhead Inserts (G0856)

The helical cutterhead is equipped with 4-sided indexable carbide inserts. Each insert can be removed, rotated, and re-installed to use any one of its four cutting edges. Therefore, if one cutting edge becomes dull or damaged, simply rotate it 90° (as shown below) to use a sharp cutting edge.

The inserts have a reference dot on one corner. The position of the reference dot on installed inserts can be used to track which edges are sharp/unused and which edges are dull or damaged. Replace inserts once the reference dot has been rotated back to its original position.

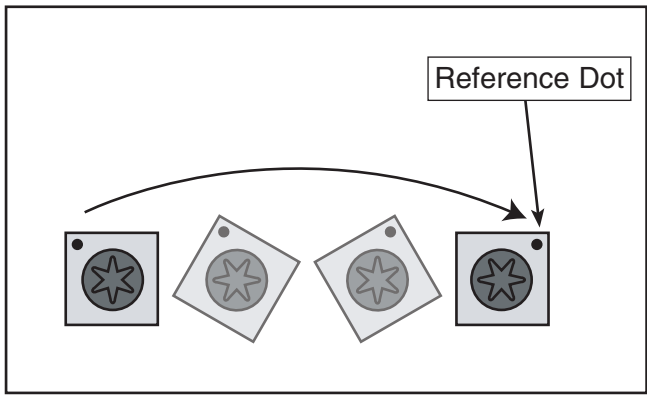

Figure 57. Insert rotating sequence.

Item(s) Needed	Qty
Carbide Inserts 15 x 15 x 2.5mm	As Needed
Torx Head Screws T-25 #10-32 x ½"	As Needed
Torque Wrench	1
T-25 Torx Bit	1

To rotate or replace helical cutterhead insert:

1. DISCONNECT MACHINE FROM POWER!
2. Remove cutterhead guard from table, and lower infeed table as far down as it will go.
3. Remove cover to get access to cutterhead pulley.
4. Taking care not to pinch your hand between belt and pulley, rotate pulley as needed to make inserts accessible for removal.
5. Put on heavy leather gloves to protect fingers and hands.
6. Carefully clean away all sawdust or debris from top of insert, Torx screw, and surrounding area (see **Figure** below).

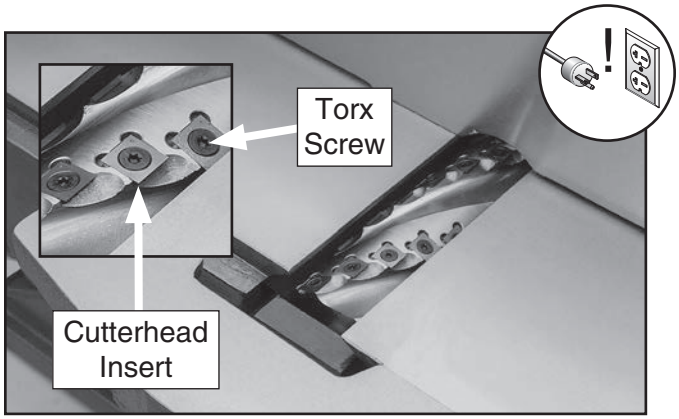

Figure 58. Example of cutterhead inserts and Torx screws.

7. Remove Torx screw and insert, then carefully clean away all dust and debris from insert and insert pocket in cutterhead.

IMPORTANT: This step is critical for achieving a smooth finish with cutting operations. Dirt or dust trapped under insert during installation will slightly raise insert in cutterhead, which will leave marks on workpiece after jointing.

Tip: *Use low-pressure compressed air or a vacuum nozzle to clean cutterhead pocket.*

8. Re-install insert with a sharp cutting edge facing outward. Make sure insert is properly seated in cutterhead pocket before securing.

—If all four insert cutting edges have been used, replace insert with a new one. Always position reference dot in same position when installing a new insert to aid in rotational sequencing.

9. Lubricate Torx screw threads with a small amount of light machine oil, wipe excess off, and torque screw to 48–50 inch/pounds.

IMPORTANT: If too much oil is applied to the threads, excess will attempt to squeeze out of threaded hole as you install insert and force it to raise slightly, making it out of alignment.

Adjusting Gibs

The function of the table gibs is to eliminate excessive play in the table movement. The gibs also control how easy it will be to move the tables up and down.

Item(s) Needed:	Qty
Open-End Wrench 13mm	1
Hex Wrench 4mm	1

To adjust table gibs:

1. Loosen (4) infeed table gib nuts with set screws on front of table/fence assembly (see **Figure 59**).

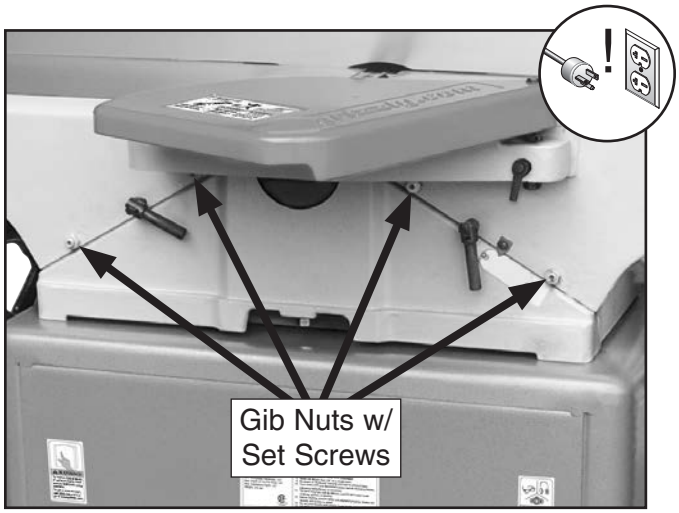

Figure 59. Infeed table gib controls.

2. Oil table ways if needed (refer to **Lubrication** on **Page 38**).

3. Evenly tighten gib set screws a small amount, then check tables by moving them up and down. Adjust set screws as needed until friction of table movement is balanced between minimal play and ease of movement.

Note: *Tighter gibs reduce play but make it harder to adjust tables.*

4. Set outfeed table height (refer to **Setting Outfeed Table Height** on **Page 47**).

Checking/Adjusting Table Parallelism

The infeed and outfeed tables must be parallel with each other in order to produce a straight, jointed edge. When the tables are not parallel with each other, the jointer will produce workpieces that are cupped (concave) or bowed (convex) along their length.

Table parallelism is factory-set and should not normally need to be adjusted when the machine is new. However, after prolonged use, or if the machine has been jarred during lifting or transportation, it may become necessary to adjust the table parallelism.

Table parallelism is adjusted by inserting shims between the dovetailed ways of the outfeed table to make it parallel with the infeed table. Once this adjustment is made, the outfeed table height should not need to be adjusted again.

Item(s) Needed:	**Qty**
Precision Straightedge 3'	1
Feeler Gauge Set	1
Metal Shims	As Needed

To check/adjust table parallelism:

1. DISCONNECT MACHINE FROM POWER!

2. Set outfeed table height (refer to **Setting Outfeed Table Height** on **Page 47***).*

3. Move cutterhead guard out of the way and slide fence all the way back.

4. Rotate cutterhead until knife/insert is not at TDC, extend straightedge over both tables, raise infeed table until it contacts straightedge (see **Figure 60**), then lock infeed table.

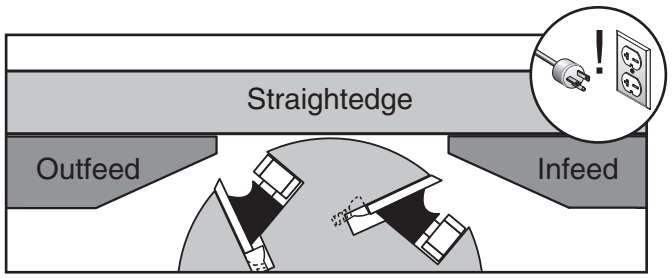

Figure 60. Checking table parallelism.

5. Look down length of straightedge on outfeed side to see if there are any noticeable gaps between straightedge and outfeed table. Do this at both front and rear of table.

   — If there are no gaps, and the straightedge makes full contact with both tables at front and rear, the tables are parallel with each other and no adjustments are necessary.

   — If there are gaps anywhere between one of the tables and the straightedge, the tables are not parallel to each other and must be adjusted. Proceed to **Step 6**.

6. Insert feeler gauge between table and straightedge where gap is greatest (see **Figure 61**). Maximum allowable tolerance is 0.003".

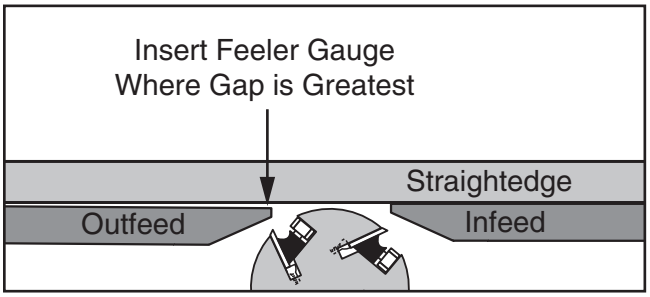

Figure 61. Example of feeler gauge location for checking table parallelism.

7. Loosen outfeed table locks. Place shims between dovetailed ways (see **Figure 62**) until outfeed table is within 0.003" of parallel with infeed table at front and rear of tables.

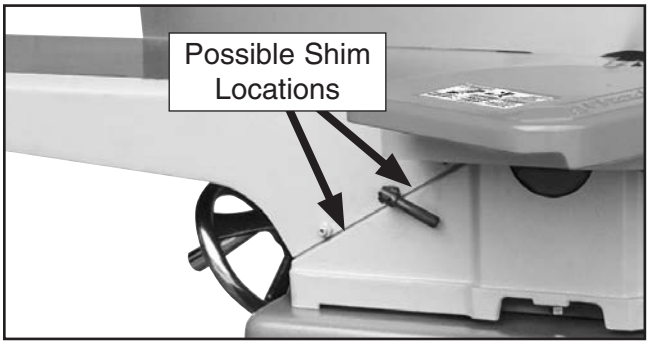

Figure 62. Locations to place shims when adjusting table parallelism.

8. Re-check outfeed table height (refer to **Setting Outfeed Table Height** on **Page 47**), and re-adjust if necessary.

Setting Outfeed Table Height

To help ensure safe operation and best cutting results, set the outfeed table height level with the knives/inserts when they are at top-dead-center (TDC). If the outfeed table is set too low, the workpiece will be tapered from front to back or there will be snipe (a gouge in the end of the board that is uneven with the rest of the cut). If the outfeed table is set too high, the workpiece will hit the edge of the outfeed table during operation, increasing the chance of kickback.

Item(s) Needed	Qty
Precision Straightedge 3'	1

To set outfeed table height:

1. DISCONNECT MACHINE FROM POWER!

2. Remove cutterhead guard and fence, then open belt cover.

3. **G0855 Only:** Make sure knife heights are set correctly (refer to **Setting/Replacing Knives** on **Page 42**).

4. Loosen outfeed table lock (see **Figure 63**).

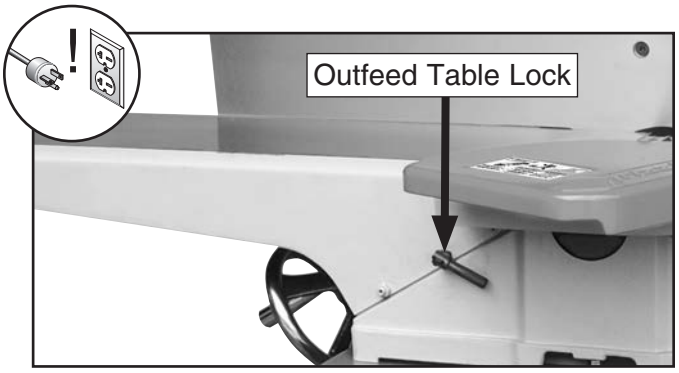

Figure 63. Location of outfeed table lock.

5. Place straightedge on outfeed table so it extends over cutterhead.

6. Use motor pulley to rotate cutterhead until one knife or insert is at TDC (its highest point during rotation), as shown in **Figures 64–65**.

7. Use outfeed table handwheel to set outfeed table so knife or insert barely touches straightedge, as shown in **Figure 65**.

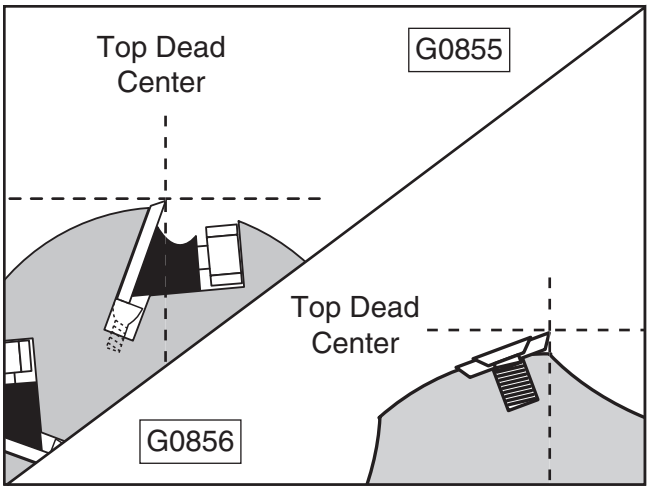

Figure 64. Knife or insert at TDC.

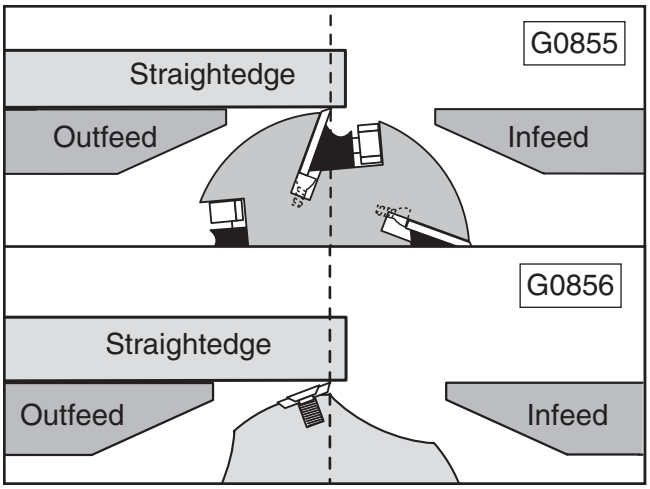

Figure 65. Using straightedge to check outfeed table height.

8. Tighten outfeed table lock so outfeed table will not move during operation.

9. Re-install cutterhead guard and fence, then close belt cover.

10. Verify proper operation of cutterhead guard (refer to **Checking/Adjusting Cutterhead Guard** on **Page 53** for instructions).

Setting Fence Stops

The fence stops simplify the task of adjusting the fence to 45° inward, 90°, and 45° outward (135°).

Item(s) Needed:	Qty
Open-End Wrench 14mm	1
Sliding Bevel	1

Setting 45° Inward Stop

1. DISCONNECT MACHINE FROM POWER!

2. Loosen fence tilt lock, rotate stop block up, then tilt fence approximately 45° inward onto stop bolt (see **Figure 66**).

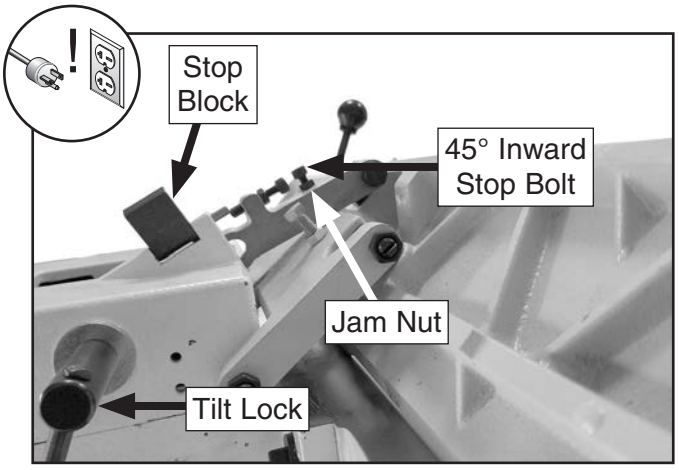

Figure 66. Fence set to 45° inward.

3. Place sliding bevel set to 45° against fence and table, as shown in **Figure 67**.

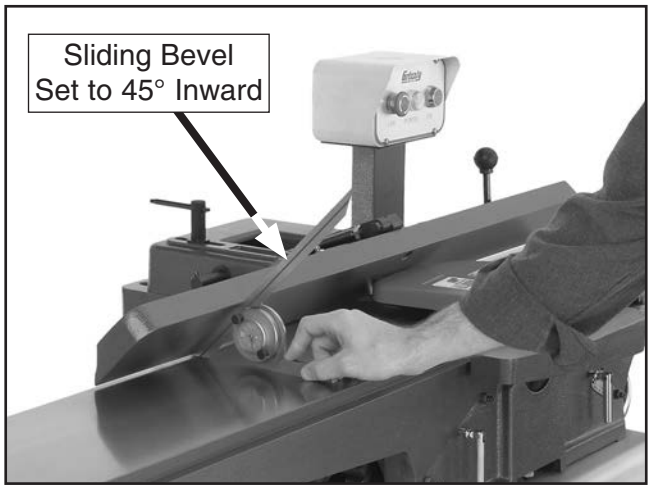

Figure 67. Example of adjusting fence to 45° inward.

4. Loosen jam nut on 45° stop bolt and adjust stop bolt until fence is exactly 45° inward while resting on stop bolt (see **Figure 66**). Verify angle, then retighten jam nut.

Setting 90° Stop

1. DISCONNECT MACHINE FROM POWER!

2. Loosen fence tilt lock, rotate stop block down, and position fence approximately 90° onto stop cap screw (see **Figure 68**).

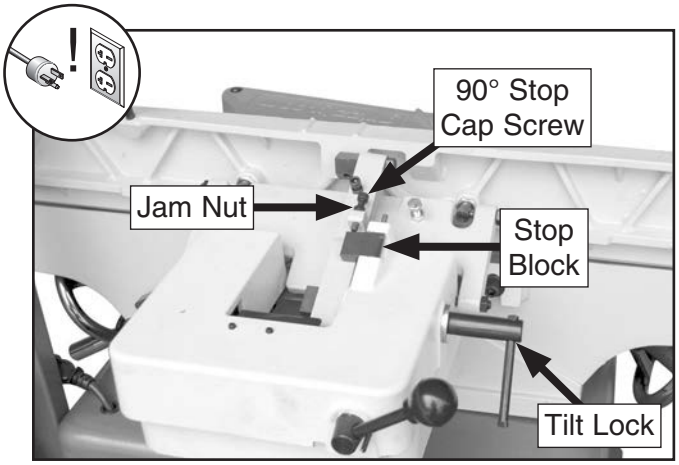

Figure 68. Fence set to 90°.

3. Place sliding bevel set to 90° against fence and table, as shown in **Figure 69**.



Figure 69. Example of adjusting fence to 90°.

4. Loosen jam nut on 90° stop cap screw and adjust cap screw until fence is exactly 90° while cap screw is resting on stop block (see **Figure 68**). Verify angle, then retighten jam nut.

Setting 45° Outward (135°) Stop

1. DISCONNECT MACHINE FROM POWER!

2. Loosen fence tilt lock, rotate stop block up, then tilt fence approximately 45° inward onto stop bolt (see **Figure 70**).

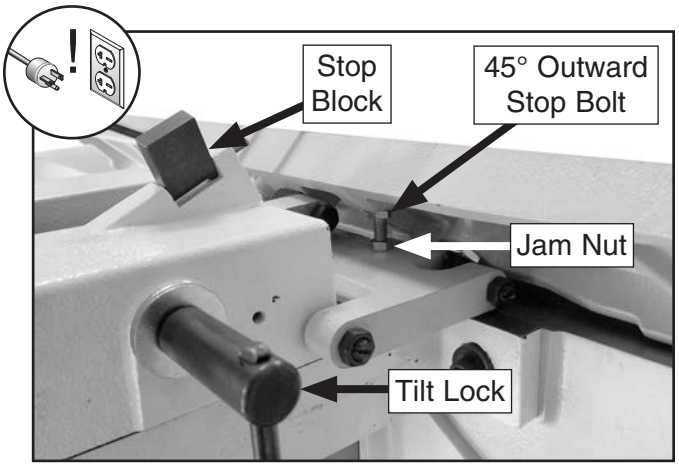

Figure 70. Fence set to 45° outward.

3. Place sliding bevel set to 135° against fence and table, as shown in **Figure 71**.

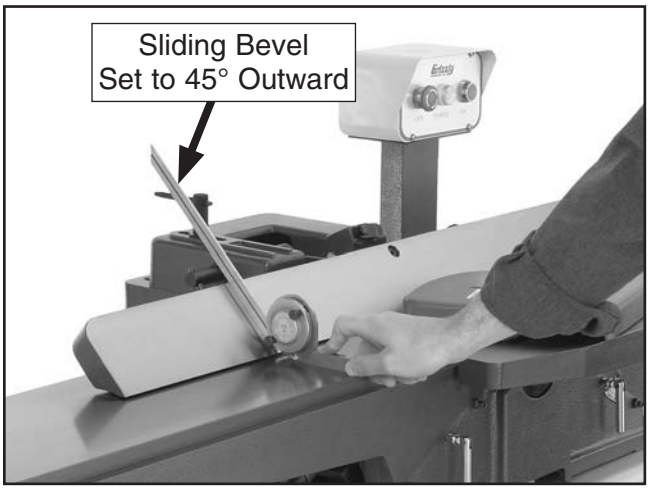

Figure 71. Example of adjusting fence 45° outward.

4. Loosen jam nut on 45° stop bolt and adjust stop bolt until fence is exactly 45° outward while resting on stop bolt (see **Figure 70**). Verify angle, then retighten jam nut.

Calibrating Depth-of-Cut Scale

For best cutting results, calibrate or "zero" the depth-of-cut scale so cutting depth shown on the scale matches the actual cutting depth (per pass).

Item(s) Needed: **Qty**
Precision Straightedge 3' 1
Phillips Screwdriver #2 1

To calibrate depth-of-cut scale:

1. DISCONNECT MACHINE FROM POWER!

2. Make sure outfeed table height is set correctly (refer to **Setting Outfeed Table Height** on **Page 47**).

3. Move cutterhead guard out of the way and slide fence all the way back, then place straightedge across infeed and outfeed tables.

4. Adjust infeed table until it is even with outfeed table (see **Figure 72**).

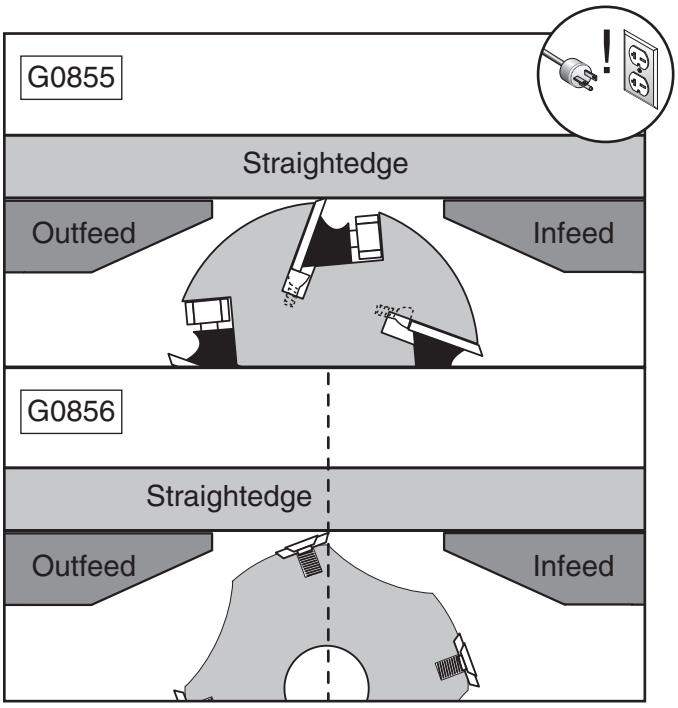

Figure 72. Infeed table even with outfeed table.

5. Loosen Phillips head screw, adjust scale pointer to point to "0", then re-tighten screw. (see **Figure 73**).

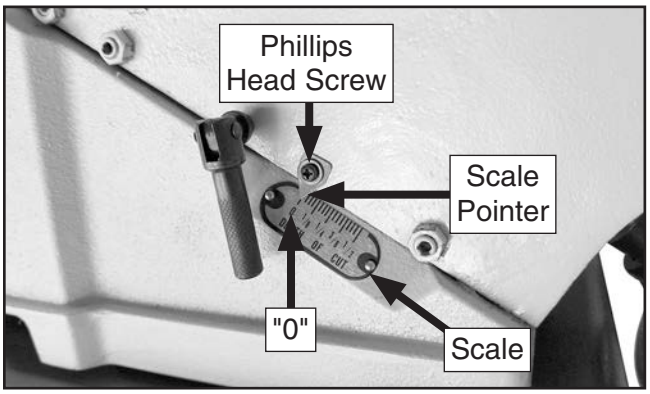

Figure 73. Depth-of-cut scale set to "0".

Tensioning/ Replacing V-Belt

To ensure optimum power transmission from the motor to the cutterhead, the V-belt must be in good condition (free from cracks, fraying and wear) and properly tensioned.

NOTICE

After approximately 16 hours of operation, belts will stretch and seat into pulley grooves. The belts need to be re-tensioned after this initial break-in period to ensure optimum power transfer and maximum overall life of the belts.

Item(s) Needed	Qty
Replacement Belt (P0855083)	1
Phillips Screwdriver #2	1
Open-End or Socket Wrench 13mm	1

Tensioning Belt

1. DISCONNECT MACHINE FROM POWER!

2. Remove rear access panel.

3. Loosen motor mount fasteners shown in **Figure 74**. DO NOT completely remove motor mount fasteners.

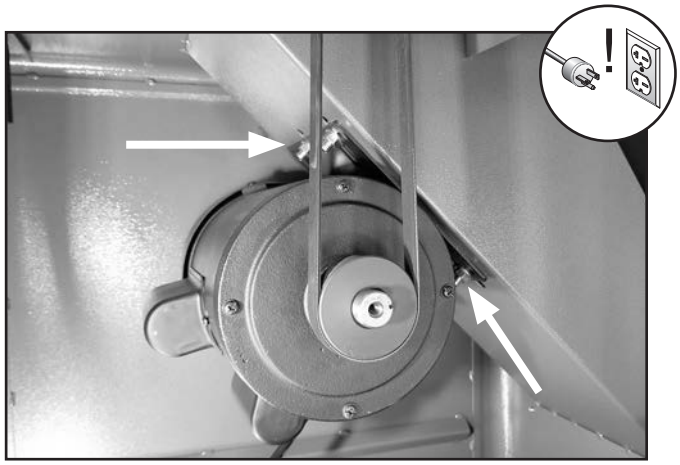

Figure 74. Location of motor mount fasteners (3 of 4 shown).

4. Press down on motor to keep tension on belt.

⚠CAUTION

Belts and pulleys will be hot after operation. Allow them to cool before handling.

5. Press belt with moderate pressure in center to check belt tension. Belt is correctly tensioned when there is approximately ¼" deflection when pushed, as shown in **Figure 75**.

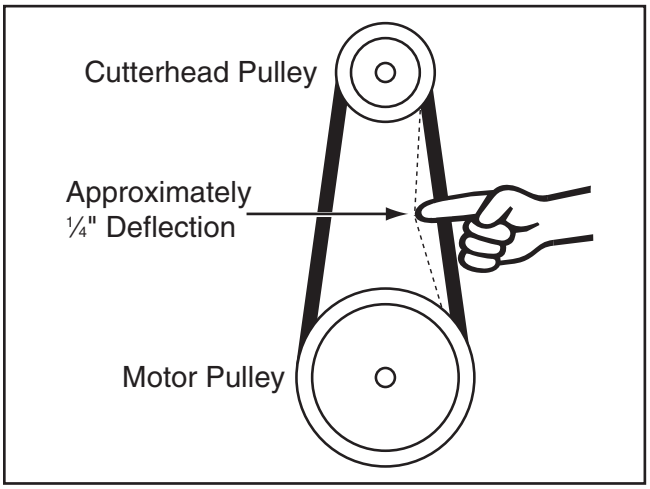

Figure 75. Checking belt tension.

— If there is more than ¼" deflection when you check belt tension, repeat the tensioning procedure until it is correct.

6. Tighten motor mount fasteners (see **Figure 74**), and replace rear access panel.

Replacing Belt

1. DISCONNECT MACHINE FROM POWER!

2. Open belt cover and remove rear access panel on stand.

3. Loosen motor mount fasteners shown in **Figure 74**.

4. Use a 2x4 as leverage to lift motor as you remove belt and replace it with a new one. Make sure belt is seated in pulley groove.

5. Follow **Steps 4–5** in **Tensioning Belt** procedure to set correct belt tension.

6. Tighten motor mount fasteners (see **Figure 74**), replace rear access panel, and close belt cover.

Checking/Aligning Pulleys

Pulley alignment is an important factor in power transmission and belt life. The pulleys should be parallel to each other and in the same plane (coplanar) for optimum performance.

Each pulley can be adjusted by loosening the set screw that secures the pulley to the shaft, sliding the pulley in/out, and retightening the set screw to lock the pulley in place.

Item(s) Needed	Qty
Precision Straightedge 3' (Optional)	1
Hex Wrench 3mm	1
Phillips Head Screwdriver #2	1

To align pulleys:

1. DISCONNECT MACHINE FROM POWER!

2. Remove fence, belt cover, and rear access panel on stand.

3. Look down length of belt and pulley faces to check pulley alignment (see **Figures 76**–**77**). If available use a narrow straightedge against pulley faces to check alignment.

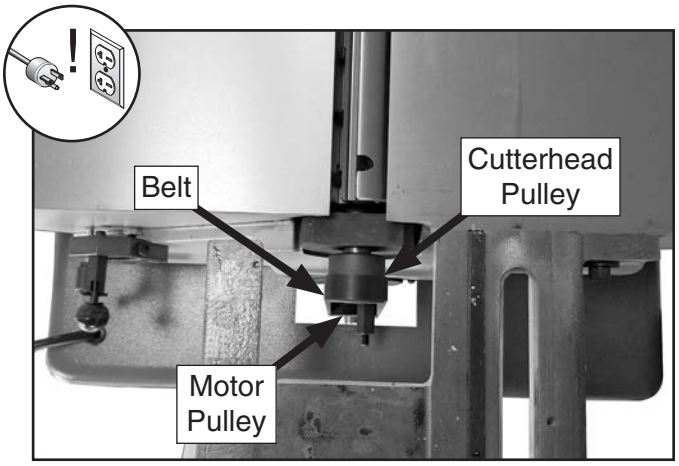

Figure 76. Checking pulley alignment (viewed from above).

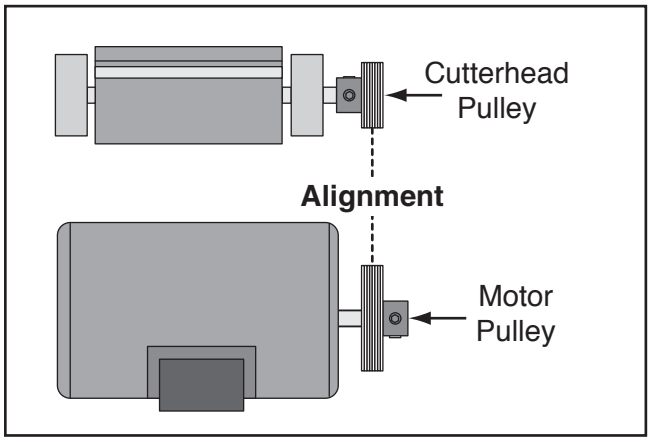

Figure 77. Proper pulley alignment.

— If pulleys *are* aligned, proceed to **Step 7**.

— If pulleys *are not* aligned, perform **Steps 4–6**.

4. Remove belt (refer to **Tensioning/Replacing Belt** of **Page 51**).

5. Loosen motor pulley set screw and cutterhead pulley set screw, and then align both pulleys. (Use straightedge if needed.)

6. Tighten set screws, replace belt, and repeat **Step 3** to verify proper pulley alignment. Pulleys should be parallel and aligned, as shown in **Figure 77**, when belt is properly tensioned.

7. Re-install fence, belt cover, and rear access panel on stand

Checking/Adjusting Cutterhead Guard

⚠WARNING

The cutterhead guard is a critical safety feature of this jointer. You MUST install and verify its operation before using the jointer! Failure to properly install this guard will greatly increase the risk of serious personal injury.

The cutterhead guard is designed to reduce the risk of accidental contact with hands or fingers with the spinning cutterhead. When properly installed and functioning correctly, the guard automatically rotates clear of the cutterhead during the cutting operation and then springs back over the cutterhead as soon as the operation is complete.

In order to function as intended, the guard must be installed as low as possible over the infeed table without actually touching it (approximately 1/16" above infeed table), and it must have enough spring tension at the mounting shaft to quickly reposition itself against the fence after it is rotated away from the cutterhead and released. Before performing rabbeting operation, adjust guard height to just clear outfeed table.

To check/adjust cutterhead guard for proper operation:

1. DISCONNECT MACHINE FROM POWER!

2. Set fence to 90° and move it all the way back, then pull cutterhead guard (see **Figure 78**) back and let it go.

   — If cutterhead guard *springs* back over cutterhead, *contacts* fence, and *does not drag* across infeed table, then it is properly adjusted.

   — If cutterhead guard *does not spring* back over cutterhead, *does not contact* fence, or *drags* across infeed table, then proceed to **Step 3**.

3. Loosen shaft lock (see **Figure 78**). Move guard so it is resting against fence, and 1/16" above infeed table.

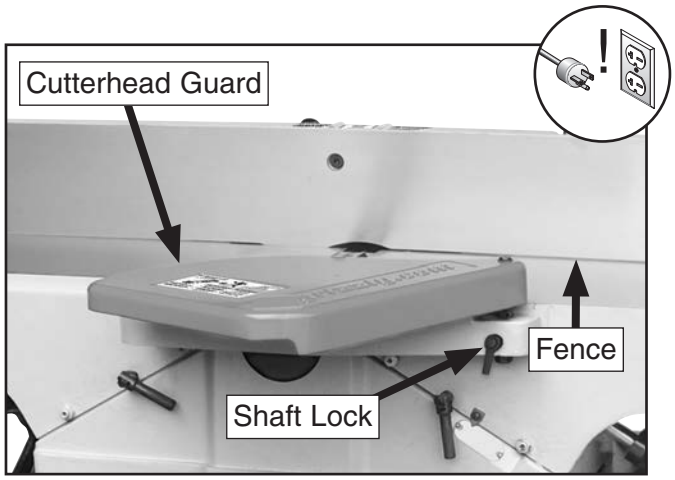

Figure 78. Cutterhead guard components.

4. Hold guard height in place and tighten shaft lock to secure setting.

5. Repeat **Step 2** and, if necessary, repeat **Steps 3–4** until cutterhead guard is properly adjusted.

SECTION 8: WIRING

These pages are current at the time of printing. However, in the spirit of improvement, we may make changes to the electrical systems of future machines. Compare the manufacture date of your machine to the one stated in this manual, and study this section carefully.

If there are differences between your machine and what is shown in this section, call Technical Support at (570) 546-9663 for assistance BEFORE making any changes to the wiring on your machine. An updated wiring diagram may be available. **Note:** *Please gather the serial number and manufacture date of your machine before calling. This information can be found on the main machine label.*

⚠WARNING
Wiring Safety Instructions

SHOCK HAZARD. Working on wiring that is connected to a power source is extremely dangerous. Touching electrified parts will result in personal injury including but not limited to severe burns, electrocution, or death. Disconnect the power from the machine before servicing electrical components!

MODIFICATIONS. Modifying the wiring beyond what is shown in the diagram may lead to unpredictable results, including serious injury or fire. This includes the installation of unapproved aftermarket parts.

WIRE CONNECTIONS. All connections must be tight to prevent wires from loosening during machine operation. Double-check all wires disconnected or connected during any wiring task to ensure tight connections.

CIRCUIT REQUIREMENTS. You MUST follow the requirements at the beginning of this manual when connecting your machine to a power source.

WIRE/COMPONENT DAMAGE. Damaged wires or components increase the risk of serious personal injury, fire, or machine damage. If you notice that any wires or components are damaged while performing a wiring task, replace those wires or components.

MOTOR WIRING. The motor wiring shown in these diagrams is current at the time of printing but may not match your machine. If you find this to be the case, use the wiring diagram inside the motor junction box.

CAPACITORS/INVERTERS. Some capacitors and power inverters store an electrical charge for up to 10 minutes after being disconnected from the power source. To reduce the risk of being shocked, wait at least this long before working on capacitors.

EXPERIENCING DIFFICULTIES. If you are experiencing difficulties understanding the information included in this section, contact our Technical Support at (570) 546-9663.

NOTICE

The photos and diagrams included in this section are best viewed in color. You can view these pages in color at www.grizzly.com.

COLOR KEY

BLACK	Bk	BLUE	Bl	YELLOW	Yl	LIGHT BLUE	Lb
WHITE	Wt	BROWN	Br	YELLOW GREEN	Yg	BLUE WHITE	Bw
GREEN	Gn	GRAY	Gy	PURPLE	Pu	TURQUOISE	Tu
RED	Rd	ORANGE	Or	PINK	Pk		

Wiring Diagram

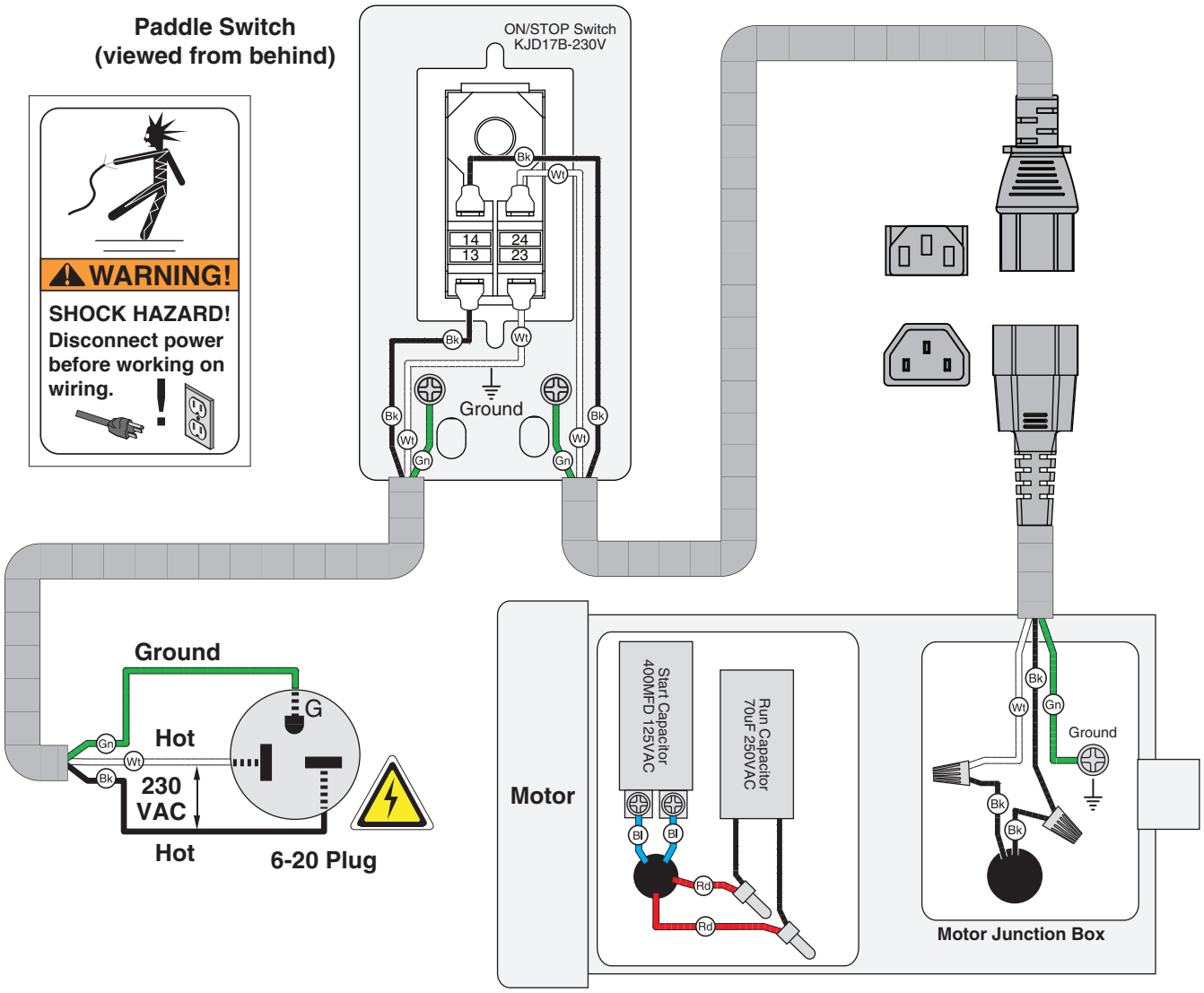



Figure 79. On/Stop switch connections.

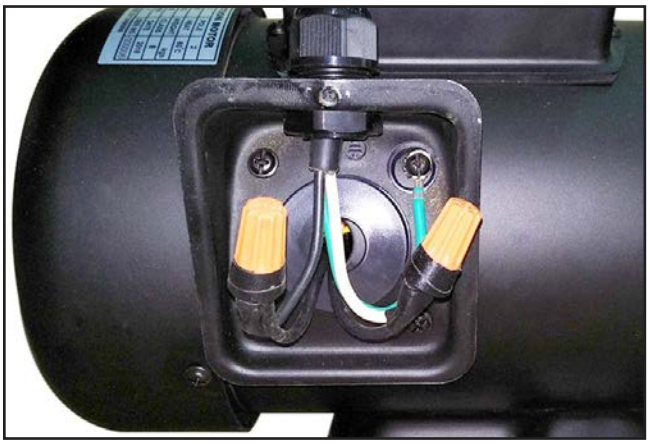

Figure 80. Motor junction box connections.

SECTION 9: PARTS

Fence & Cutterhead

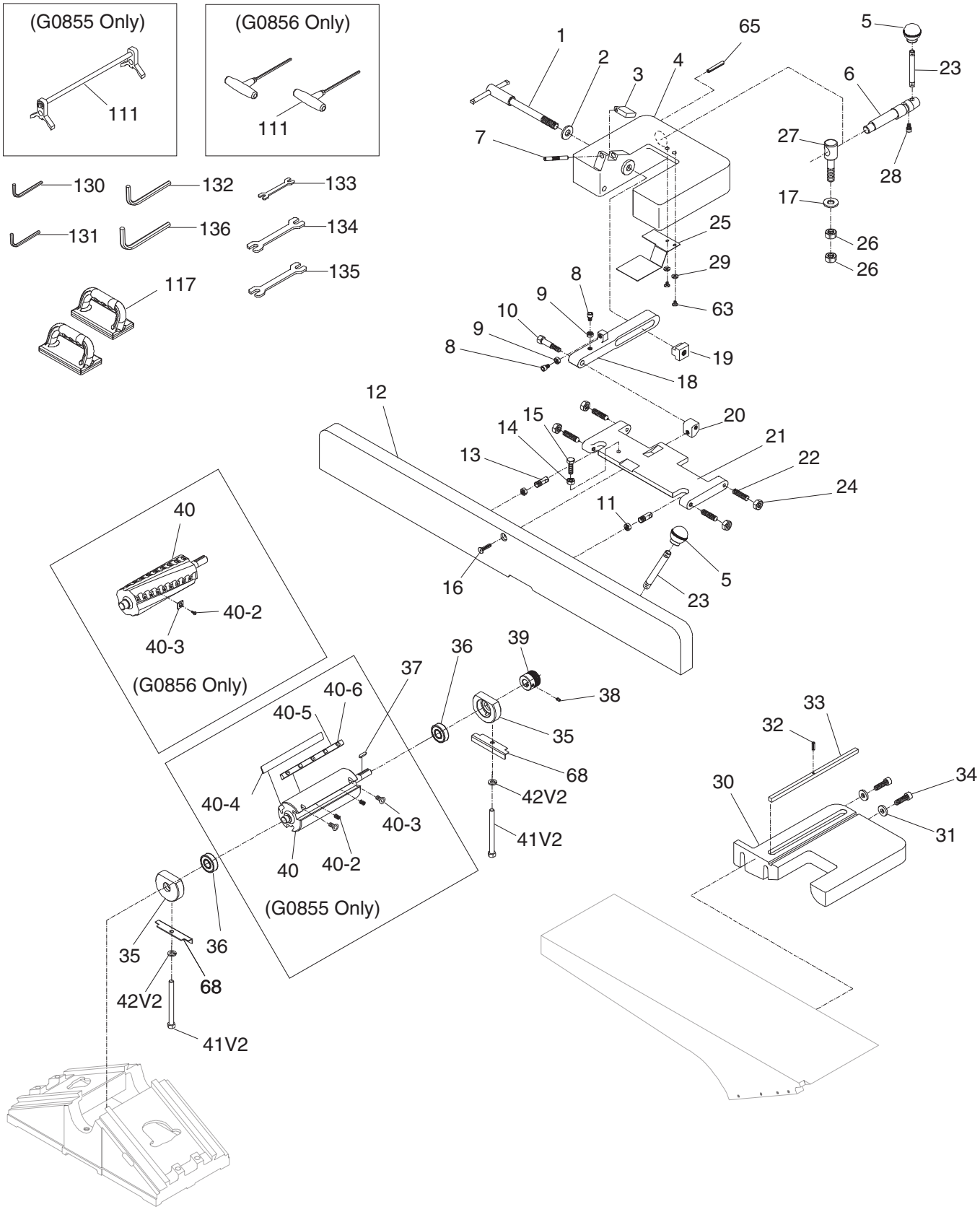

BUY PARTS ONLINE AT GRIZZLY.COM!
Scan QR code to visit our Parts Store.

Fence & Cutterhead Parts List

REF	PART #	DESCRIPTION
1	P0855001	FENCE TILT LOCK LEVER 1/2-12
2	P0855002	FLAT WASHER 13MM
3	P0855003	STOP BLOCK
4	P0855004	FENCE CARRIAGE
5	P0855005	KNOB 3/8-16, D1-5/16, BALL
6	P0855006	ECCENTRIC SHAFT 3/8-16, 5-1/4L
7	P0855007	DOWEL PIN 5 X 50
8	P0855008	CAP SCREW 1/4-20 X 1-1/4
9	P0855009	HEX NUT 1/4-20
10	P0855010	SHOULDER BOLT 5/16-18 X 11/16, 3/8 X 1
11	P0855011	HEX NUT 1/2-20 THIN
12	P0855012	FENCE
13	P0855013	STUD-SE 1/2-20, 1-3/8, 11/16
14	P0855014	HEX NUT 5/16-18
15	P0855015	HEX BOLT 5/16-18 X 1-1/4
16	P0855016	FLAT HD CAP SCR 5/16-18 X 1-1/2
17	P0855017	FENDER WASHER 1/2
18	P0855018	FENCE LINK
19	P0855019	T-NUT 1/2-12
20	P0855020	FENCE BLOCK
21	P0855021	FENCE SWIVEL BASE
22	P0855022	SET SCR 3/8-16 X 1-1/2, CONE-PT, SLOTTED
23	P0855023	STUD-DE 3/8-16 X 3-1/8, 3/8
24	P0855024	HEX NUT 3/8-16 THIN
25	P0855025	SAFETY PLATE
26	P0855026	HEX NUT 1/2-12
27	P0855027	CAMLOCK STUD 1/2-12 X 1-1/2, 3-1/2L
28	P0855028	CAP SCREW 1/4-20 X 1/2
29	P0855029	FLAT WASHER 1/4
30	P0855030	FENCE BASE
31	P0855031	FLAT WASHER 3/8
32	P0855032	ROLL PIN 4 X 20

REF	PART #	DESCRIPTION
33	P0855033	KEY 9.5 X 9.5 X 268
34	P0855034	CAP SCREW 3/8-16 X 1-1/2
35	P0855035	BEARING BLOCK
36	P0855036	BALL BEARING 6204-2NSE
37	P0855037	KEY 5 X 5 X 30
38	P0855038	SET SCREW M6-1 X 8
39	P0855039	CUTTERHEAD PULLEY
40	P0855040	CUTTERHEAD 8" 4-KNIFE (G0855)
40-2	P0855040-2	COMPRESSION SPRING (G0855)
40-3	P0855040-3	FLAT HD CAP SCR M5-.8 X 12 (G0855)
40-4	P0855040-4	KNIFE 8 X 3/4 X 1/8 HSS (G0855)
40-5	P0855040-5	KNIFE GIB (G0855)
40-6	P0855040-6	KNIFE GIB BOLT 1/4-28 X 1/4 (G0855)
40	P0856040	HELICAL CUTTERHEAD 8" (G0856)
40-2	P0856040-2	FLAT HD TORX SCR T-25 10-32 X 1/2 (G0856)
40-3	P0856040-3	CARBIDE INSERT 15 X 15 X 2.5MM (G0856)
41V2	P0855041V2	HEX BOLT 3/8-24 X 4-1/4 V2.01.21
42V2	P0855042V2	LOCK WASHER 9MM V2.01.21
63	P0855063	PHLP HD SCR 1/4-20 X 1/2
65	P0855065	ROLL PIN 4 X 25
68	P0855068	BEARING BLOCK PLATE
111	P0855111	KNIFE-SETTING JIG (G0855)
111	P0856111	TORX DRIVER T-25 (G0856)
117	P0855117	PUSH BLOCKS
130	P0855130	HEX WRENCH 3MM
131	P0855131	HEX WRENCH 4MM
132	P0855132	HEX WRENCH 5MM
133	P0855133	WRENCH 8 X 10 OPEN-ENDS
134	P0855134	WRENCH 12 X 14 OPEN-ENDS
135	P0855135	WRENCH 11 X 13 OPEN-ENDS
136	P0855136	HEX WRENCH 6MM

Please Note: *We do our best to stock replacement parts whenever possible, but we cannot guarantee that all parts shown here are available for purchase. Call* ***(800) 523-4777*** *or visit our online parts store at* ***www.grizzly.com*** *to check for availability.*

BUY PARTS ONLINE AT GRIZZLY.COM!
Scan QR code to visit our Parts Store.

Tables, Base, Stand & Motor

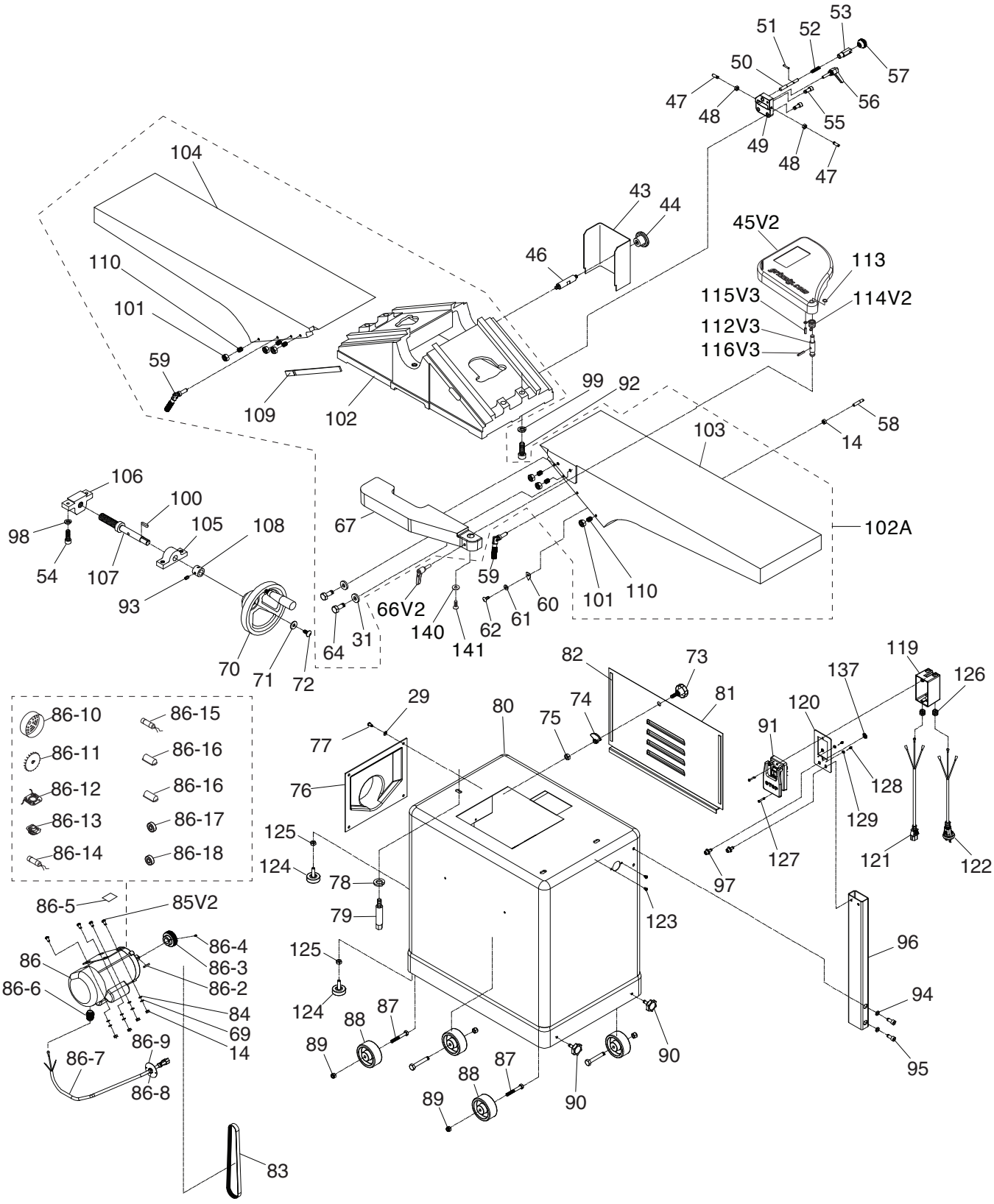

BUY PARTS ONLINE AT GRIZZLY.COM!
Scan QR code to visit our Parts Store.

Tables, Base, Stand & Motor Parts List

REF	PART #	DESCRIPTION
14	P0855014	HEX NUT 5/16-18
29	P0855029	FLAT WASHER 1/4
31	P0855031	FLAT WASHER 3/8
43	P0855043	BELT COVER
44	P0855044	KNOB 5/16-18, D1-3/4, ROUND
45V2	P0855045V2	CUTTERHEAD GUARD V2.07.19
46	P0855046	STANDOFF-HEX MM 5/16-18 X 3/8, 3
47	P0855047	SET SCREW 1/4-20 X 3/4
48	P0855048	HEX NUT 1/4-20
49	P0855049	DEPTH STOP BLOCK
50	P0855050	SHAFT W/HOLE 2-3/4L
51	P0855051	ROLL PIN 3 X 20
52	P0855052	COMPRESSION SPRING
53	P0855053	SPRING SLEEVE
54	P0855054	CAP SCREW 3/8-16 X 1-1/4
55	P0855055	CAP SCREW 5/16-18 X 3/4
56	P0855056	ADJUSTABLE HANDLE 2L, 1/4-20 X 1
57	P0855057	KNOB 1/4-20, D7/8, BALL
58	P0855058	SET SCR 5/16-18 X 3/4, 1-5/16, SLOTTED
59	P0855059	FOLDING HANDLE 2-1/4L, 5/16-18 X 1-3/16
60	P0855060	SCALE POINTER
61	P0855061	FLAT WASHER 4MM
62	P0855062	PHLP HD SCR 8/32 X 1/4
64	P0855064	HEX BOLT 3/8-16 X 1
66V2	P0855066V2	CUTTERHEAD GUARD LOCK HANDLE V2.07.19
67	P0855067	RABBETING TABLE
69	P0855069	LOCK WASHER 5/16
70	P0855070	TABLE HANDWHEEL W/HANDLE
71	P0855071	FENDER WASHER 8.5 X 23 X 2MM
72	P0855072	PHLP HD SCR 5/16-18 X 1/2
73	P0855073	KNOB BOLT 5-LOBE 3/8-16 X 1, D1-3/4
74	P0855074	LATCH
75	P0855075	HEX NUT 3/8-16
76	P0855076	DUST PORT 4"
77	P0855077	PHLP HD SCR 1/4-20 X 1/2
78	P0855078	LOCK WASHER 10MM
79	P0855079	STANDOFF HEX 3/8-16 X 3/4, 3-5/16L
80	P0855080	CABINET STAND
81	P0855081	REAR ACCESS PANEL
82	P0855082	FOAM PAD
83	P0855083	POLY-V BELT 350J-7 35"
84	P0855084	FLAT WASHER 5/16
85V2	P0855085V2	CARRIAGE BOLT 5/16-18 X 3/4
86	P0855086	MOTOR 3HP 230V 1-PH
86-2	P0855086-2	KEY 5 X 5 X 30
86-3	P0855086-3	MOTOR PULLEY
86-4	P0855086-4	SET SCREW M6-1 X 8
86-5	P0855086-5	MOTOR LABEL
86-6	P0855086-6	STRAIN RELIEF TYPE-3 PG13.5
86-7	P0855086-7	MOTOR CORD 14G 3W 32"
86-8	P0855086-8	STRAIN RELIEF TYPE-1 3/4"

REF	PART #	DESCRIPTION
86-9	P0855086-9	BACKING BOARD
86-10	P0855086-10	MOTOR FAN COVER
86-11	P0855086-11	MOTOR FAN
86-12	P0855086-12	CONTACT PLATE
86-13	P0855086-13	CENTRIFUGAL SWITCH
86-14	P0855086-14	S CAPACITOR 400M 125V 1-1/2 X 3-1/2
86-15	P0855086-15	R CAPACITOR 70M 250V 1-1/2 X 3-1/2
86-16	P0855086-16	CAPACITOR COVER
86-17	P0855086-17	BALL BEARING 6205-ZZ (FRONT)
86-18	P0855086-18	BALL BEARING 6203-ZZ (REAR)
87	P0855087	WHEEL AXLE 3/8-16 X 1-3/16, 2-1/2L
88	P0855088	WHEEL
89	P0855089	LOCK NUT 3/8-16
90	P0855090	KNOB BOLT 6-LOBE 5/16-18 X 3/4
91	P0855091	MAG SWITCH KEDU KJD17B-230V-S
92	P0855092	CAP SCREW 1/2-12 X 1-3/4
93	P0855093	SET SCREW 1/4-20 X 1/4
94	P0855094	LOCK WASHER 8MM
95	P0855095	CAP SCREW M8-1.25 X 70
96	P0855096	SWITCH PEDESTAL
97	P0855097	CAP SCREW M8-1.25 X 20 W/WASHERS
98	P0855098	LOCK WASHER 3/8
99	P0855099	LOCK WASHER 1/2
100	P0855100	KEY 5 X 5 X 22
101	P0855101	HEX NUT 5/16-18
102A	P0855102A	TABLE ASSEMBLY
105	P0855105	LEADSCREW SUPPORT
106	P0855106	LEADSCREW BRACKET
107	P0855107	LEADSCREW
108	P0855108	LEADSCREW COLLAR
109	P0855109	TABLE GIB
110	P0855110	SET SCREW 5/16-18 X 1-1/4 CONE-PT
112V3	P0855112V3	GUARD PIVOT SHAFT V3.07.19
113	P0855113	EXT RETAINING RING 11MM
114V2	P0855114V2	TORSION SPRING V2.07.19
115V3	P0855115V3	ROLL PIN 6 X 28 V3.07.19
116V3	P0855116V3	ROLL PIN 5 X 26 V3.07.19
119	P0855119	SWITCH BOX
120	P0855120	SWITCH PLATE
121	P0855121	SWITCH CORD 14G 3W 20"
122	P0855122	POWER CORD 14G 3W 10' 6-20P
123	P0855123	TAP SCREW M6 X 8
124	P0855124	ADJUSTABLE FOOT M8-1.25
125	P0855125	HEX NUT M8-1.25
126	P0855126	STRAIN RELIEF TYPE-1 5/8"
127	P0855127	PHLP HD SCR M4-.7 X 25
128	P0855128	PHLP HD SCR M4-.7 X 6
129	P0855129	EXT TOOTH WASHER 4MM
137	P0855137	GROUND LABEL
140	P0855140	FENDER WASHER 6.7 X 19 X 2MM
141	P0855141	BUTTON HD CAP SCR M6-1 X 12

BUY PARTS ONLINE AT GRIZZLY.COM!
Scan QR code to visit our Parts Store.

Labels & Cosmetics

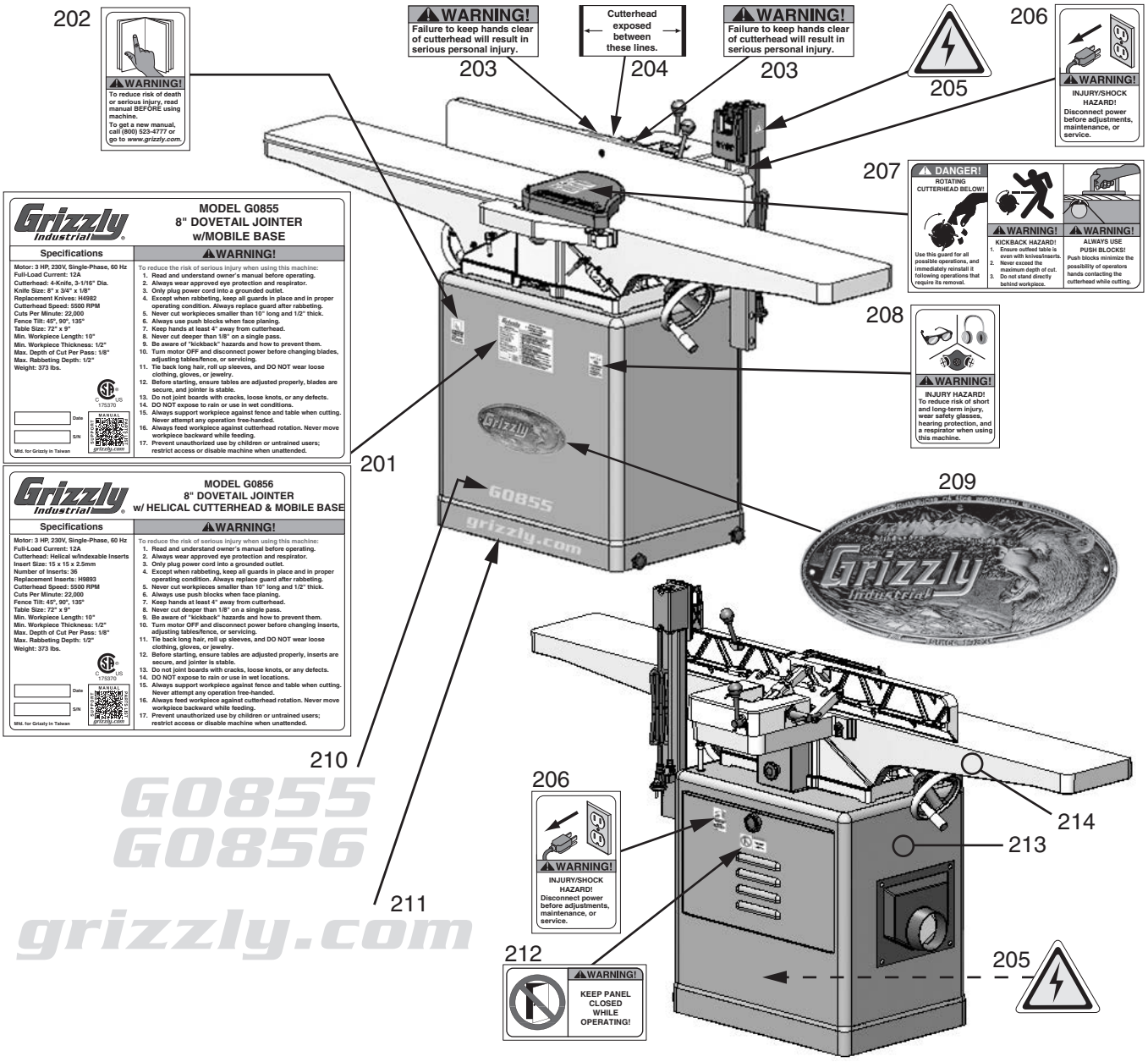

REF	PART #	DESCRIPTION
201	P0855201	MACHINE ID LABEL (G0855)
201	P0856201	MACHINE ID LABEL (G0856)
202	P0855202	READ MANUAL LABEL
203	P0855203	CUTTERHEAD WARNING LABEL
204	P0855204	CUTTERHEAD EXPOSED LABEL
205	P0855205	ELECTRICITY LABEL
206	P0855206	DISCONNECT POWER LABEL
207	P0855207	CUTTERHEAD GUARD LABEL

REF	PART #	DESCRIPTION
208	P0855208	EYES EARS LUNGS WARNING LABEL
209	P0855209	GRIZZLY NAMEPLATE-SMALL
210	P0855210	MODEL NUMBER LABEL (G0855)
210	P0856210	MODEL NUMBER LABEL (G0856)
211	P0855211	GRIZZLY.COM LABEL
212	P0855212	PANEL CLOSED WARNING LABEL
213	P0855213	TOUCH-UP PAINT, GRIZZLY GREEN
214	P0855214	TOUCH-UP PAINT, GREY PUTTY

⚠WARNING

Safety labels help reduce the risk of serious injury caused by machine hazards. If any label comes off or becomes unreadable, the owner of this machine MUST replace it in the original location before resuming operations. For replacements, contact (800) 523-4777 or www.grizzly.com.

BUY PARTS ONLINE AT GRIZZLY.COM!
Scan QR code to visit our Parts Store.

WARRANTY & RETURNS

Grizzly Industrial, Inc. warrants every product it sells for a period of **1 year** to the original purchaser from the date of purchase. This warranty does not apply to defects due directly or indirectly to misuse, abuse, negligence, accidents, repairs or alterations or lack of maintenance. This is Grizzly's sole written warranty and any and all warranties that may be implied by law, including any merchantability or fitness, for any particular purpose, are hereby limited to the duration of this written warranty. We do not warrant or represent that the merchandise complies with the provisions of any law or acts unless the manufacturer so warrants. In no event shall Grizzly's liability under this warranty exceed the purchase price paid for the product and any legal actions brought against Grizzly shall be tried in the State of Washington, County of Whatcom.

We shall in no event be liable for death, injuries to persons or property or for incidental, contingent, special, or consequential damages arising from the use of our products.

The manufacturers reserve the right to change specifications at any time because they constantly strive to achieve better quality equipment. We make every effort to ensure that our products meet high quality and durability standards and we hope you never need to use this warranty.

In the event you need to use this warranty, contact us by mail or phone and give us all the details. We will then issue you a "Return Number," which must be clearly posted on the outside as well as the inside of the carton. We will not accept any item back without this number. Proof of purchase must accompany the merchandise.

Please feel free to write or call us if you have any questions about the machine or the manual.

Thank you again for your business and continued support. We hope to serve you again soon.

To take advantage of this warranty, you must register it at **https://www.grizzly.com/forms/warranty**, or you can scan the QR code below to be automatically directed to our warranty registration page. Enter all applicable information for the product.



grizzly.com®

TOOL WEBSITE

Buy Direct and Save with Grizzly® – Trusted, Proven and a Great Value!

~Since 1983~

Visit Our Website Today For Current Specials!

ORDER

24 HOURS A DAY!

1-800-523-4777

