SECTION 9: PARTS

We do our best to stock replacement parts when possible, but we cannot guarantee that all parts shown are available for purchase. Call **(800) 523-4777** or visit **www.grizzly.com/parts** to check for availability.

Headstock

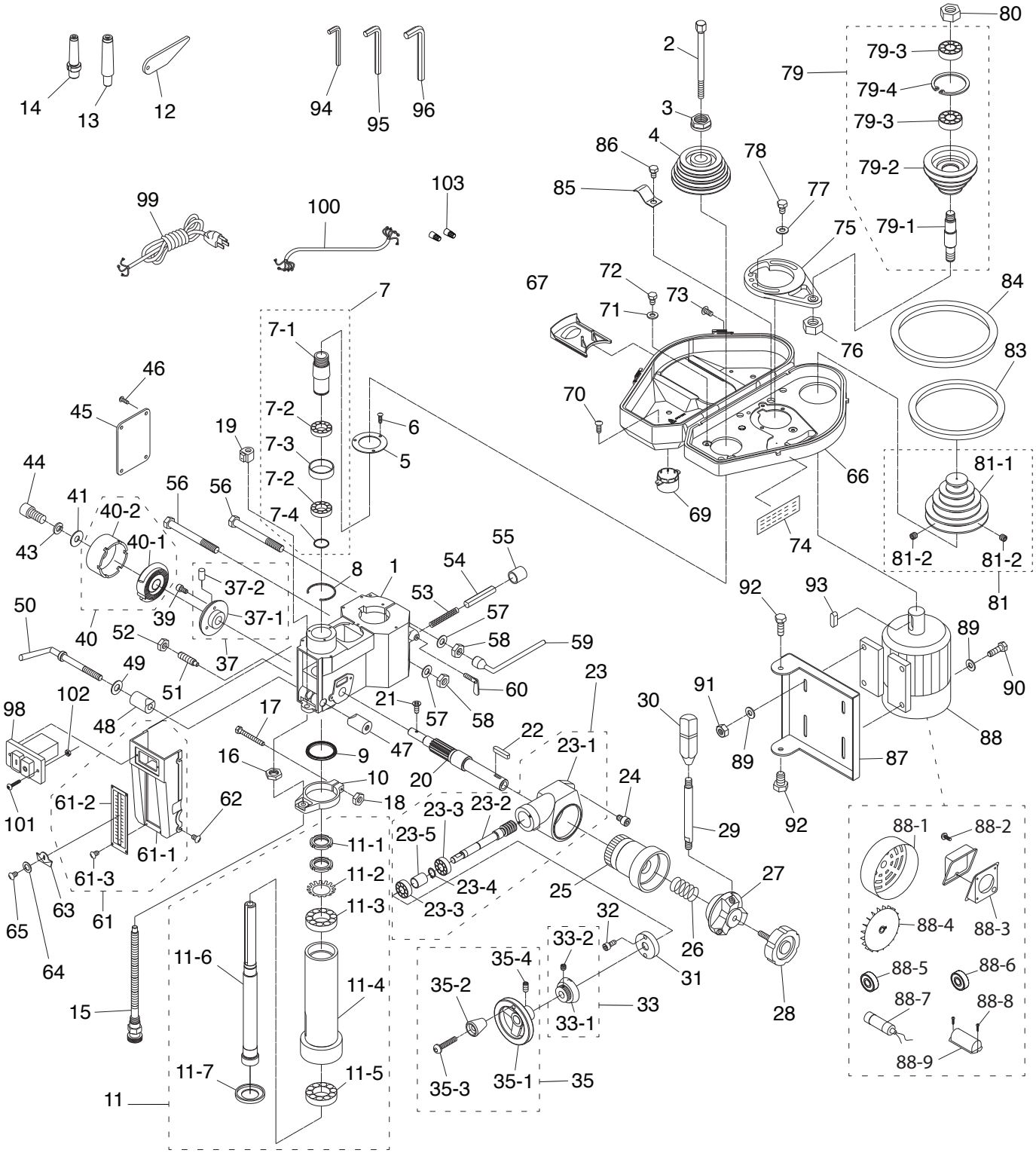

Headstock Parts List

REF	PART #	DESCRIPTION
1	P0810001	HEADSTOCK CASTING
2	P0810002	DRAWBAR 3/8-16 X 16-5/16
3	P0810003	SPINDLE LOCK NUT 1-5/8-16 (LH)
4	P0810004	SPINDLE PULLEY
5	P0810005	BEARING COVER 66 X 105 X 2.5
6	P0810006	PHLP HD SCR 1/4-20 X 1/2
7	P0810007	SPINDLE SLEEVE ASSEMBLY
7-1	P0810007-1	SPINDLE SLEEVE
7-2	P0810007-2	BALL BEARING 6009ZZ
7-3	P0810007-3	BUSHING 68 X 74 X 22
7-4	P0810007-4	O-RING 2 X 41
8	P0810008	INT RETAINING RING 80MM
9	P0810009	RUBBER FLANGE
10	P0810010	DEPTH ROD MOUNT
11	P0810011	SPINDLE ASSEMBLY MT#3
11-1	P0810011-1	SPANNER NUT M30-2 (LH)
11-2	P0810011-2	TABBED WASHER 30MM
11-3	P0810011-3	TAPERED ROLLER BEARING 30206
11-4	P0810011-4	QUILL MT#3
11-5	P0810011-5	TAPERED ROLLER BEARING 30207
11-6	P0810011-6	SPINDLE MT#3
11-7	P0810011-7	BEARING COVER
12	P0810012	DRIFT KEY
13	P0810013	DRILL CHUCK ARBOR MT3 X JT6, 3/8-16
14	P0810014	CUTTER ARBOR 1" D MT#3, 3/8-16
15	P0810015	QUILL DEPTH LEADSCREW ASSY 1/2-10 X 9
16	P0810016	QUILL DEPTH SUPPORT NUT M16-1.5
17	P0810017	HEX BOLT 1/4-20 X 2
18	P0810018	HEX NUT 1/4-20
19	P0810019	QUILL DEPTH STOP BLOCK
20	P0810020	PINION SHAFT
21	P0810021	FLAT HD SCR 10-24 X 1/2
22	P0810022	KEY 7 X 7 X 20
23	P0810023	WORM SHAFT ASSEMBLY
23-1	P0810023-1	WORM SHAFT HOUSING
23-2	P0810023-2	WORM SHAFT
23-3	P0810023-3	BALL BEARING 6202ZZ
23-4	P0810023-4	EXT RETAINING RING 15MM
23-5	P0810023-5	BEARING SPACER 27.5 X 34 X 30
24	P0810024	CAP SCREW 5/16-18 X 3/4
25	P0810025	WORM GEAR
26	P0810026	COMPRESSION SPRING 2.4 X 18 X 25
27	P0810027	COARSE DOWNFEED LEVER HUB
28	P0810028	KNOB BOLT 3/8-16 X 1-5/8, 3" OD, 6-LOBE
29	P0810029	LEVER SHAFT-DE 1/2-12 X 6-3/4, 3/4
30	P0810030	LEVER HANDLE 1/2-12, 1-1/4 X 4-3/8
31	P0810031	WORM SHAFT END BRACKET
32	P0810032	PHLP HD SCR 10-24 X 3/8
33	P0810033	FINE DOWNFEED DIAL ASSEMBLY
33-1	P0810033-1	FINE DOWNFEED GRADUATED DIAL
33-2	P0810033-2	SET SCREW 1/4-20 X 5/16
35	P0810035	FINE DOWNFEED HANDWHEEL ASSEMBLY
35-1	P0810035-1	HANDWHEEL TYPE-24 4"D X 1/2"B X 5/16-18
35-2	P0810035-2	KNOB 5/16, 1 X 1 (PLASTIC)
35-3	P0810035-3	SHOULDER SCREW 5/16-18 X 3/8, 3/8 X 7/8
35-4	P0810035-4	SET SCREW 5/16-18 X 5/16
37	P0810037	SPRING BASE ASSEMBLY

REF	PART #	DESCRIPTION
37-1	P0810037-1	SPRING BASE
37-2	P0810037-2	DOWEL PIN 3 X 12
39	P0810039	PHLP HD SCR 10-24 X 3/4
40	P0810040	RETURN SPRING ASSEMBLY
40-1	P0810040-1	FLAT COILED SPRING
40-2	P0810040-2	RETURN SPRING COVER
41	P0810041	FENDER WASHER 1/4
43	P0810043	LOCK WASHER 1/4
44	P0810044	CAP SCREW 1/4-20 X 5/8
45	P0810045	HEADSTOCK COVER PLATE
46	P0810046	PHLP HD SCR 1/4-20 X 3/8
47	P0810047	LOCK PLUNGER (RIGHT)
48	P0810048	LOCK PLUNGER (LEFT)
49	P0810049	FLAT WASHER 1/2
50	P0810050	HANDLE ROD 1/2-12 X 9-1/4
51	P0810051	ALIGNMENT PIN 3/8-16 X 38
52	P0810052	HEX NUT 3/8-16
53	P0810053	COMPRESSION SPRING 1.4 X 13.2 X 83
54	P0810054	BELT TENSION BAR
55	P0810055	RUBBER BUMPER
56	P0810056	HEX BOLT 5/8-11 X 6
57	P0810057	DOCK WASHER 5/8 X 1-9/16 X 1/8
58	P0810058	HEX NUT 5/8-11
59	P0810059	L-WRENCH 1"
60	P0810060	THUMB SCREW 3/8-16, FOLDING-TYPE
61	P0810061	FRONT COVER ASSEMBLY
61-1	P0810061-1	FRONT COVER PLATE
61-2	P0810061-2	DEPTH SCALE
61-3	P0810061-3	TAP SCREW M4 X 8
62	P0810062	PHLP HD SCR 1/4-20 X 1/2
63	P0810063	DEPTH INDICATOR
64	P0810064	FLAT WASHER #5
65	P0810065	PHLP HD SCR 5-40 X 1/4
66	P0810066	BELT COVER
67	P0810067	BELT COVER HATCH
69	P0810069	SPINDLE COVER
70	P0810070	TAP SCREW M4 X 12
71	P0810071	FENDER WASHER 5/16
72	P0810072	HEX BOLT 5/16-18 X 3/4
73	P0810073	PHLP HD SCR 1/4-20 X 1/2
74	P0810074	SPINDLE SPEED CHART
75	P0810075	IDLER PIVOT ARM
76	P0810076	HEX NUT 5/8-11
77	P0810077	FENDER WASHER 5/16
78	P0810078	HEX BOLT 5/16-18 X 1-1/2
79	P0810079	IDLER PULLEY ASSEMBLY
79-1	P0810079-1	IDLER PULLEY SHAFT 8 X 107MM
79-2	P0810079-2	IDLER PULLEY
79-3	P0810079-3	BALL BEARING 6204ZZ
79-4	P0810079-4	INT RETAINING RING 52MM
80	P0810080	HEX NUT 5/8-11
81	P0810081	MOTOR PULLEY ASSEMBLY
81-1	P0810081-1	MOTOR PULLEY
81-2	P0810081-2	SET SCREW 5/16-18 X 5/16
83	P0810083	V-BELT B33
84	P0810084	V-BELT B42
85	P0810085	WIRE RETENTION CLIP

Headstock Parts List (Continued)

REF	PART #	DESCRIPTION
86	P0810086	HEX BOLT 5/16-18 X 3/4
87	P0810087	MOTOR MOUNT PLATE
88	P0810088	MOTOR 1-1/2 HP 220V/440V 3-PH
88-1	P0810088-1	MOTOR FAN COVER
88-2	P0810088-2	PHLP HD SCR 10-24 X 3/8
88-3	P0810088-3	MOTOR JUNCTION BOX
88-4	P0810088-4	MOTOR FAN
88-5	P0810088-5	BALL BEARING 6205ZZ (FRONT)
88-6	P0810088-6	BALL BEARING 6203ZZ (REAR)
88-7	P0810088-7	S CAPACITOR 150M 250V 1-3/8 X 2-3/4
88-8	P0810088-8	PHLP HD SCR M5-.8 X 6
88-9	P0810088-9	CAPACITOR COVER
89	P0810089	FENDER WASHER 5/16
90	P0810090	HEX BOLT 5/16-18 X 1

REF	PART #	DESCRIPTION
91	P0810091	HEX NUT 5/16-18
92	P0810092	HEX BOLT 7/16-14 X 3/4
93	P0810093	KEY 7 X 7 X 40
94	P0810094	HEX WRENCH 3MM
95	P0810095	HEX WRENCH 4MM
96	P0810096	HEX WRENCH 5MM
97	P0810097	DRILL CHUCK JT6 1/2"
98	P0810098	ON/OFF SWITCH KEDU HY56 250V 20A
99	P0810099	POWER CORD 14G 3W 72" 6-15P
100	P0810100	MOTOR CORD 14G 5W 30"
101	P0810101	PHLP HD SCR M4-.7 X 25
102	P0810102	HEX NUT M4-.7
103	P0810103	WIRE NUT 14G

Column

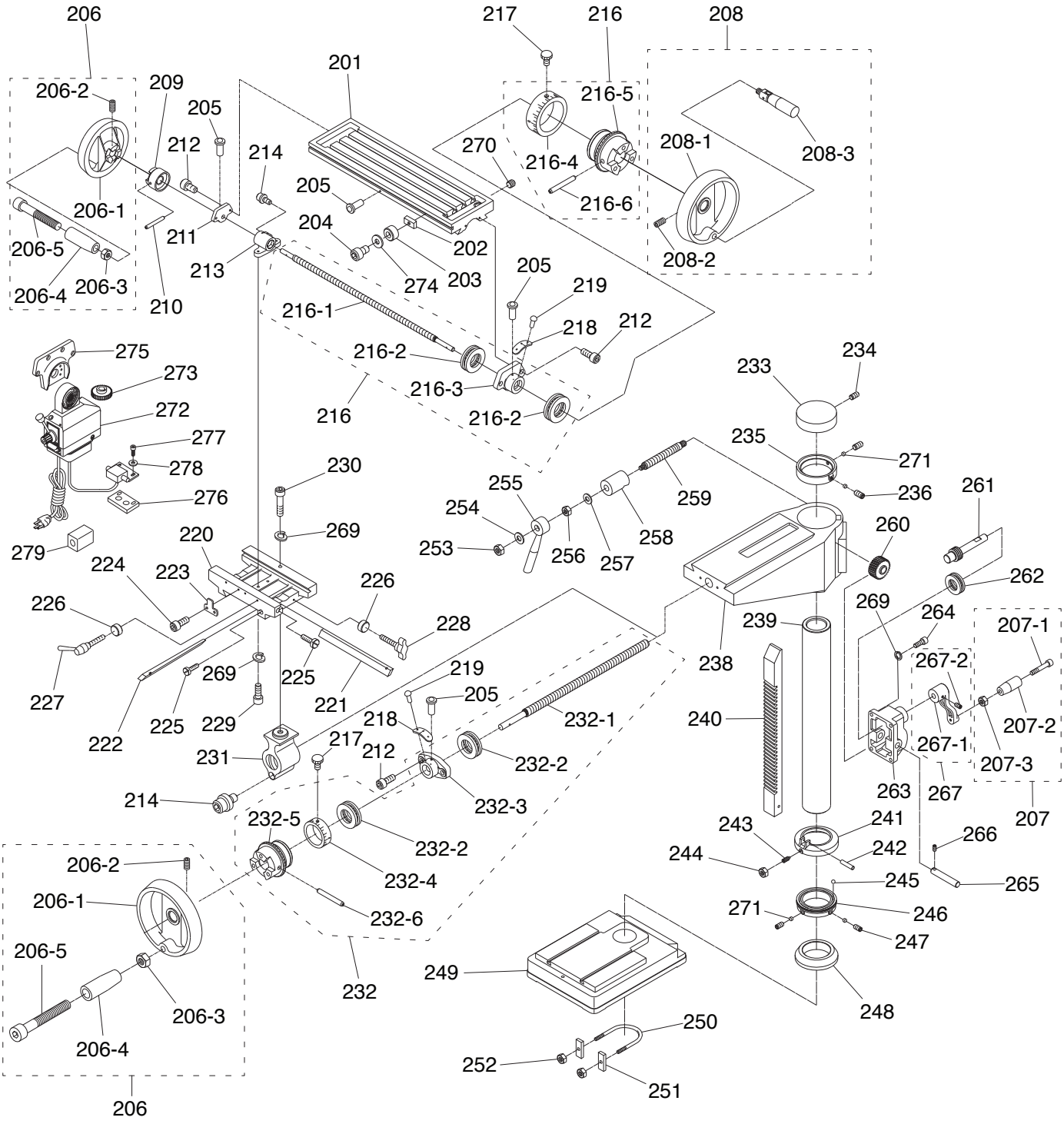
206
206-2
209
205
212
214
201
217
216
208
216-5
208-1
208-3
270
216-4
216-6
206-1
205
204
202
211
206-5
213
274
203
208-2
206-4
206-3
210
205
219
216-1
218
212
216-2
216-3
216
216-2
275
273
272
277
278
276
279
230
269
220
224
223
226
226
228
227
269
225
221
222
225
229
219
205
218
232-1
217
212
232-2
231
214
232-3
232-5
232-2
232-4
232-6
232
206-2
206-1
206-5
206-3
206-4
206
233
234
235
271
236
255
259
254
258
253
256
257
261
260
262
239
238
269
264
207-1
267-2
240
207-2
267-1
207-3
263
267
207
243
241
266
244
242
245
265
271
246
247
249
248
250
252
251

Column Parts List

REF	PART #	DESCRIPTION
201	P0810201	TABLE
202	P0810202	SLIDE NUT 1/4-20
203	P0810203	LIMIT STOP
204	P0810204	CAP SCREW 1/4-20 X 1-1/2
205	P0810205	BALL OILER 1/4 PRESS-IN
206	P0810206	Y-AXIS HANDWHEEL ASSEMBLY
206-1	P0810206-1	HANDWHEEL TYPE-25 120D X 17 B-S
206-2	P0810206-2	SET SCREW M6-1 X 8
206-3	P0810206-3	HEX NUT 3/8-16
206-4	P0810206-4	HANDLE 3/8, 1 X 2-3/4 (PLASTIC)
206-5	P0810206-5	HANDLE SCREW 3/8-16 X 3-1/2
207	P0810207	Z-AXIS CRANK HANDLE ASSEMBLY
207-1	P0810207-1	HANDLE SCREW 3/8-16 X 3-1/2
207-2	P0810207-2	HANDLE 3/8, 1 X 2-3/4 (PLASTIC)
207-3	P0810207-3	HEX NUT 3/8-16
208	P0810208	X-AXIS HANDWHEEL ASSEMBLY
208-1	P0810208-1	HANDWHEEL TYPE-25 120D X 17 B-S
208-2	P0810208-2	SET SCREW 1/4-20 X 3/8
208-3	P0810208-3	FOLDING HANDLE M10-1.5 X 12, 23 X 90
209	P0810209	X-AXIS LEADSCREW CLUTCH (LEFT)
210	P0810210	ROLL PIN 5 X 40
211	P0810211	X-AXIS LEADSCREW BRACKET (LEFT)
212	P0810212	CAP SCREW 5/16-18 X 1
213	P0810213	X-AXIS LEADSCREW NUT 1-10
214	P0810214	CAP SCREW M5-.8 X 16
216	P0810216	X-AXIS LEADSCREW ASSEMBLY
216-1	P0810216-1	X-AXIS LEADSCREW 1-10
216-2	P0810216-2	THRUST BEARING 51103
216-3	P0810216-3	X-AXIS LEADSCREW BRACKET (RIGHT)
216-4	P0810216-4	X-AXIS GRADUATED COLLAR (0.001")
216-5	P0810216-5	X-AXIS LEADSCREW CLUTCH (RIGHT)
216-6	P0810216-6	ROLL PIN 5 X 38
217	P0810217	KNURLED THUMB SCREW 1/4-20 X 1/2
218	P0810218	DIAL INDICATOR
219	P0810219	RIVET 2 X 4MM
220	P0810220	TABLE BASE
221	P0810221	GIB (X-AXIS)
222	P0810222	GIB (Y-AXIS)
223	P0810223	LIMIT STOP BRACKET
224	P0810224	CAP SCREW 5/16-18 X 3/4
225	P0810225	GIB BOLT 5/16-18 X 1-1/8
226	P0810226	BUSHING
227	P0810227	ADJUSTABLE HANDLE 1-3/4, 5/16-18 X 1-1/2
228	P0810228	T-KNOB BOLT 5/16-18 X 1-3/4
229	P0810229	CAP SCREW 5/16-18 X 1
230	P0810230	CAP SCREW 5/16-18 X 2-1/2
231	P0810231	Y-AXIS LEADSCREW NUT 1-10
232	P0810232	Y-AXIS LEADSCREW ASSEMBLY
232-1	P0810232-1	Y-AXIS LEADSCREW INCH 1-10
232-2	P0810232-2	THRUST BEARING 51103
232-3	P0810232-3	Y-AXIS LEADSCREW BRACKET
232-4	P0810232-4	Y-AXIS GRADUATED COLLAR (0.001")
232-5	P0810232-5	Y-AXIS LEADSCREW CLUTCH
232-6	P0810232-6	ROLL PIN 5 X 38
233	P0810233	COLUMN CAP
234	P0810234	SET SCREW 5/16-18 X 5/16
235	P0810235	COLUMN COLLAR (UPPER)
236	P0810236	SET SCREW 1/2-13 X 5/8
238	P0810238	KNEE
239	P0810239	COLUMN
240	P0810240	COLUMN RACK
241	P0810241	RACK RING
242	P0810242	ROLL PIN 5 X 38
243	P0810243	SET SCREW 5/16-18 X 7/8 DOG-PT
244	P0810244	HEX NUT 5/16-18
245	P0810245	STEEL BALL 10MM
246	P0810246	RACK RING BASE
247	P0810247	SET SCREW 1/2-12 X 5/8
248	P0810248	COLUMN COLLAR (LOWER)
249	P0810249	COLUMN BASE
250	P0810250	U-BOLT 1/2-13, 116 ID
251	P0810251	U-BOLT RETAINER BLOCK
252	P0810252	HEX NUT 1/2-13
253	P0810253	HEX NUT 3/8-16
254	P0810254	FLAT WASHER 3/8
255	P0810255	Z-AXIS LOCK HANDLE 5/8 X 4-1/2
256	P0810256	HEX NUT 5/8-11
257	P0810257	FLAT WASHER 5/8
258	P0810258	LOCK PLUNGER (Z-AXIS)
259	P0810259	LOCK BOLT 5/8-11 X 5, 3/8-16 X 1/2
260	P0810260	WORM GEAR 33T
261	P0810261	WORM SHAFT
262	P0810262	THRUST BEARING 51103
263	P0810263	Z-AXIS CRANK BRACKET
264	P0810264	CAP SCREW 5/16-18 X 1
265	P0810265	WORM GEAR SHAFT
266	P0810266	SET SCREW 1/4-20 X 3/8
267	P0810267	Z-AXIS CRANK ARM ASSEMBLY
267-1	P0810267-1	Z-AXIS CRANK ARM
267-2	P0810267-2	SET SCREW 3/8-16 X 1/2
269	P0810269	LOCK WASHER 5/16
270	P0810270	DRAIN PLUG 1/4 NPT
271	P0810271	BUSHING (BRASS)
272	P0810272	POWER FEED UNIT ALIGN AL500D
273	P0810273	X-AXIS LEADSCREW GEAR 56T
274	P0810274	FLAT WASHER 1/4
275	P0810275	POWER FEED BRACKET ASSEMBLY
276	P0810276	LIMIT SWITCH MOUNTING BLOCK
277	P0810277	CAP SCREW M8-1.25 X 12
278	P0810278	FLAT WASHER 8MM
279	P0810279	POWER FEED LIMIT STOP

Labels & Cosmetics

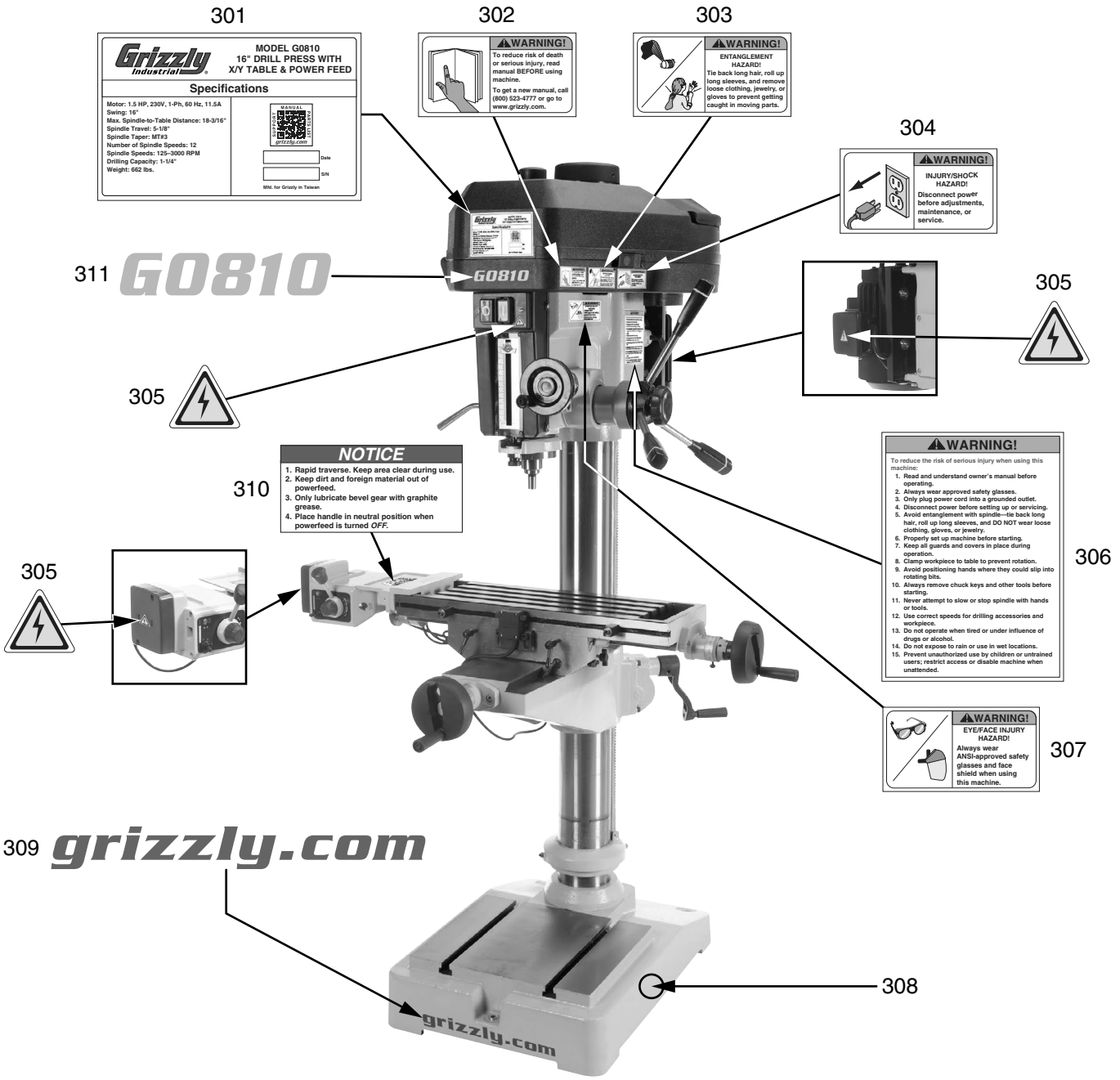

REF	PART #	DESCRIPTION
301	P0810301	MACHINE ID LABEL
302	P0810302	READ MANUAL LABEL
303	P0810303	ENTANGLEMENT WARNING LABEL
304	P0810304	DISCONNECT POWER LABEL
305	P0810305	ELECTRICITY LABEL
306	P0810306	GENERAL WARNING LABEL

REF	PART #	DESCRIPTION
307	P0810307	EYE/FACE INJURY WARNING LABEL
308	P0810308	TOUCH-UP PAINT, GRIZZLY BEIGE
309	P0810309	GRIZZLY.COM LABEL
310	P0810310	POWER FEED RAPID TRAVERSE NOTICE
311	P0810311	MODEL NUMBER LABEL

⚠WARNING

Safety labels help reduce the risk of serious injury caused by machine hazards. If any label comes off or becomes unreadable, the owner of this machine MUST replace it in the original location before resuming operations. For replacements, contact (800) 523-4777 or www.grizzly.com.