MODEL G0810
16" DRILL PRESS w/CROSS-SLIDE TABLE & POWER FEED
OWNER'S MANUAL

(For models manufactured since 04/26)



COPYRIGHT © AUGUST, 2016 BY GRIZZLY INDUSTRIAL, INC., REVISED APRIL, 2026 (LS)
WARNING: NO PORTION OF THIS MANUAL MAY BE REPRODUCED IN ANY SHAPE
OR FORM WITHOUT THE WRITTEN APPROVAL OF GRIZZLY INDUSTRIAL, INC.
#WK17973 PRINTED IN TAIWAN V3.04.26

******Keep for Future Reference******

⚠ WARNING!

This manual provides critical safety instructions on the proper setup, operation, maintenance, and service of this machine/tool. Save this document, refer to it often, and use it to instruct other operators.

Failure to read, understand and follow the instructions in this manual may result in fire or serious personal injury—including amputation, electrocution, or death.

The owner of this machine/tool is solely responsible for its safe use. This responsibility includes but is not limited to proper installation in a safe environment, personnel training and usage authorization, proper inspection and maintenance, manual availability and comprehension, application of safety devices, cutting/sanding/grinding tool integrity, and the usage of personal protective equipment.

The manufacturer will not be held liable for injury or property damage from negligence, improper training, machine modifications or misuse.

⚠ WARNING!

Some dust created by power sanding, sawing, grinding, drilling, and other construction activities contains chemicals known to the State of California to cause cancer, birth defects or other reproductive harm. Some examples of these chemicals are:

- **Lead from lead-based paints.**
- **Crystalline silica from bricks, cement and other masonry products.**
- **Arsenic and chromium from chemically-treated lumber.**

Your risk from these exposures varies, depending on how often you do this type of work. To reduce your exposure to these chemicals: Work in a well ventilated area, and work with approved safety equipment, such as those dust masks that are specially designed to filter out microscopic particles.

Table of Contents

INTRODUCTION 2
- Contact Info 2
- Manual Accuracy 2
- Identification 3
- Controls & Components 4
- Machine Data Sheet 6

SECTION 1: SAFETY 8
- Safety Instructions for Machinery 8
- Additional Safety for Drill Presses 10

SECTION 2: POWER SUPPLY 11

SECTION 3: SETUP 13
- Needed for Setup 13
- Unpacking 13
- Inventory 14
- Cleanup 15
- Site Considerations 16
- Lifting & Placing 17
- Anchoring to Floor 17
- Assembly 18
- Test Run 21
- Spindle Break-In 23
- Inspections & Adjustments 23

SECTION 4: OPERATIONS 24
- Operation Overview 24
- Table Movement 25
- Spindle Speed 27
- Calculating Spindle Speed for Drilling 29
- Spindle Downfeed 30
- Setting Depth Stop 31
- Loading/Unloading Threaded Tooling 31
- Loading/Unloading Tanged Tooling 33

SECTION 5: ACCESSORIES 34

SECTION 6: MAINTENANCE 37
- Schedule 37
- Cleaning & Protecting 37
- Lubrication 38
- Tensioning Return Spring 40
- Calibrating Depth Stop Pointer 41

SECTION 7: SERVICE 42
- Troubleshooting 42
- Adjusting Gibs 44
- Adjusting Leadscrew Backlash 45

SECTION 8: WIRING 46
- Wiring Safety Instructions 46
- Electrical Components 47
- Wiring Diagram 48

SECTION 9: PARTS 49
- Headstock 49
- Headstock Parts List 50
- Headstock Parts List (Continued) 51
- Column 52
- Labels & Cosmetics 54

WARRANTY & RETURNS 57

INTRODUCTION

Contact Info

We stand behind our machines! If you have questions or need help, contact us with the information below. Before contacting, make sure you get the **serial number** and **manufacture date** from the machine ID label. This will help us help you faster.

Grizzly Technical Support
1815 W. Battlefield
Springfield, MO 65807
Phone: (570) 546-9663
Email: techsupport@grizzly.com

We want your feedback on this manual. What did you like about it? Where could it be improved? Please take a few minutes to give us feedback.

Grizzly Documentation Manager
P.O. Box 2069
Bellingham, WA 98227-2069
Email: manuals@grizzly.com

⚠WARNING

Like all machinery there is potential danger when operating this machine. Accidents are frequently caused by lack of familiarity or failure to pay attention. Use this machine with respect and caution to decrease the risk of operator injury. If normal safety precautions are overlooked or ignored, serious personal injury may occur.

⚠CAUTION

No list of safety guidelines can be complete. Every shop environment is different. Always consider safety first, as it applies to your individual working conditions. Use this and other machinery with caution and respect. Failure to do so could result in serious personal injury, damage to equipment, or poor work results.

Manual Accuracy

We are proud to provide a high-quality owner's manual with your new machine!

We made every effort to be exact with the instructions, specifications, drawings, and photographs in this manual. Sometimes we make mistakes, but our policy of continuous improvement also means that **sometimes the machine you receive is slightly different than shown in the manual**.

If you find this to be the case, and the difference between the manual and machine leaves you confused or unsure about something, check our website for an updated version. We post current manuals and manual updates for free on our website at **www.grizzly.com**.

Alternatively, you can call our Technical Support for help. Before calling, make sure you write down the **manufacture date** and **serial number** from the machine ID label (see below). This information is required for us to provide proper tech support, and it helps us determine if updated documentation is available for your machine.

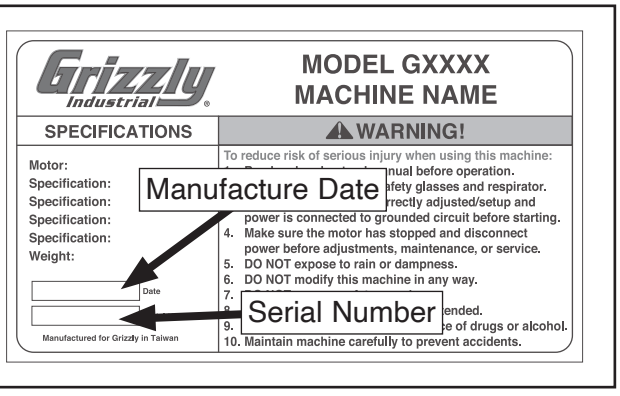

Identification

Become familiar with the names and locations of the controls and features shown below to better understand the instructions in this manual.

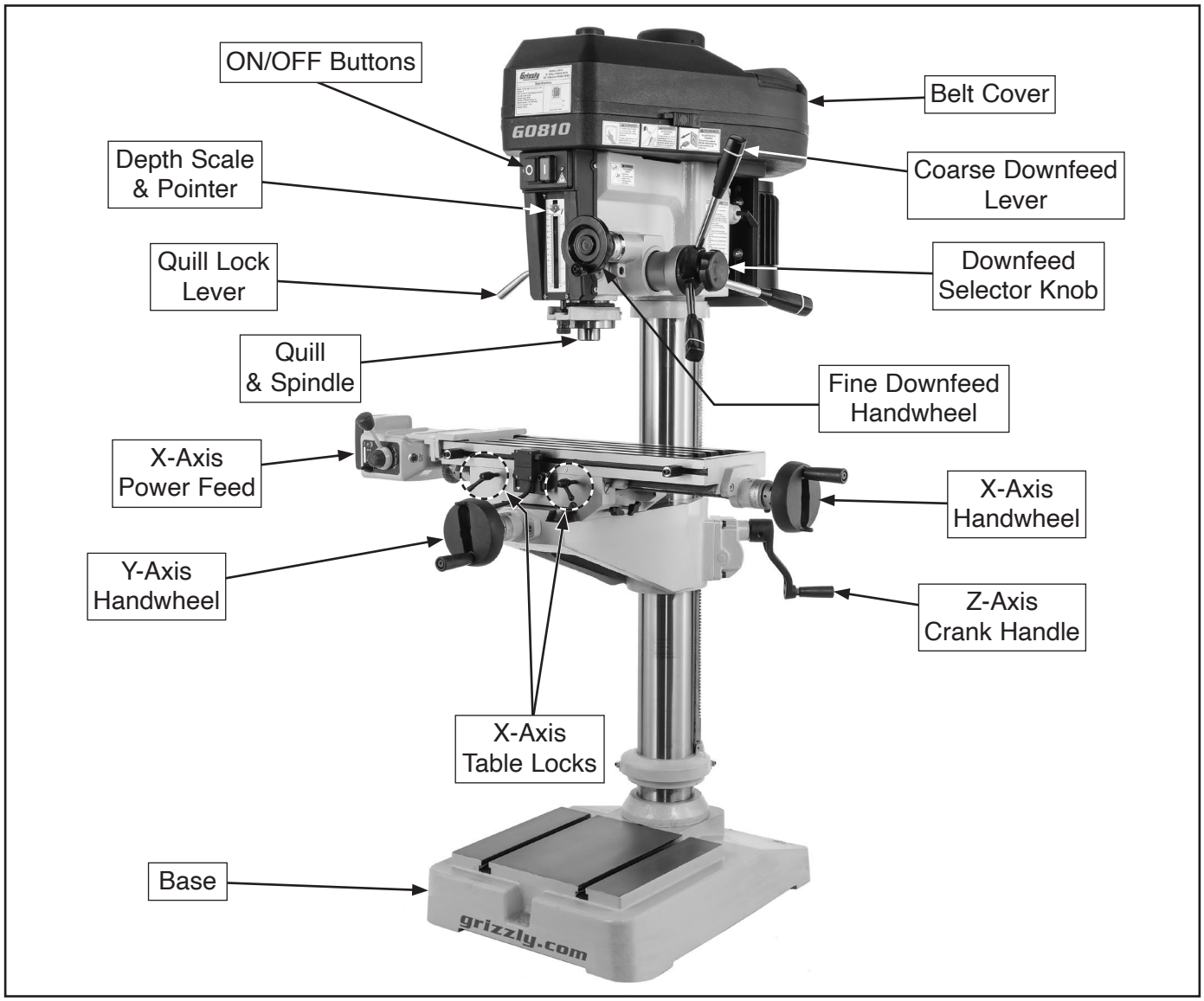

⚠CAUTION

For your Own Safety, Read Instruction Manual Before Operating Drill Press.

a) Wear eye protection.
b) Do not wear gloves, necktie, or loose clothing.
c) Clamp workpiece or brace against column to prevent rotation.
d) Use recommended speed for drill accessory and workpiece material.

Controls & Components

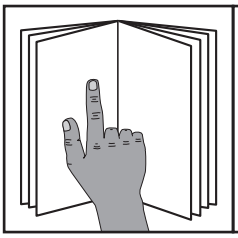

⚠WARNING

To reduce your risk of serious injury, read this entire manual BEFORE using machine.

Refer to **Figures 1–3** and the following descriptions to become familiar with the basic controls and components of this machine. Understanding these items and how they work will help you understand the rest of the manual and stay safe when operating this machine.

Headstock

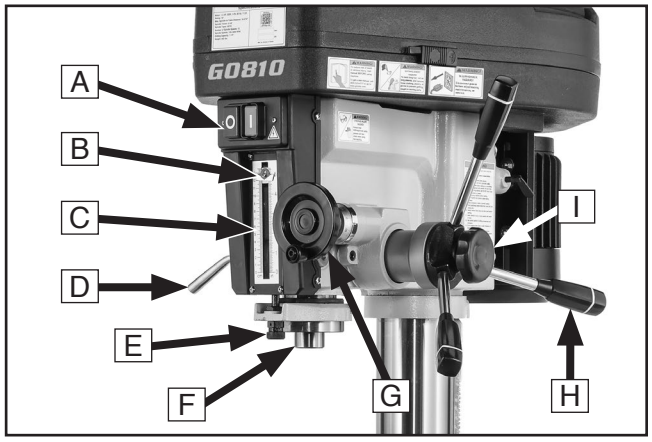

Figure 1. Headstock controls & components.

A. ON/OFF Buttons: Start and stop spindle rotation.

B. Depth Stop: Limits downward spindle travel to pre-determined depth.

C. Depth Scale: Indicates depth of cut.

D. Quill Lock Lever: Locks quill in position.

E. Depth Stop Adjustment Knob: Determines depth of cut.

F. Spindle and Quill: Holds tooling for drilling operations.

G. Fine Downfeed Handwheel: Provides fine control over vertical spindle travel. Equipped with a graduated collar that is marked in 0.001" increments. One complete revolution equals 0.100".

H. Coarse Downfeed Levers: Provide coarse control over vertical spindle travel.

I. Downfeed Selector Knob: Engages/disengages fine downfeed handwheel.

X/Y Cross Table

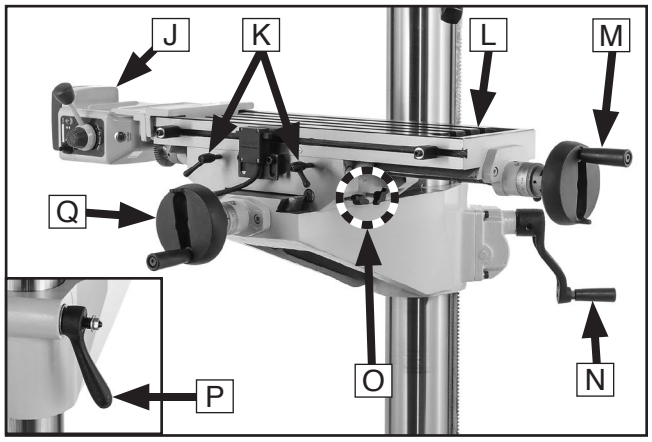

Figure 2. Table controls & components.

J. X-Axis Power Feed: Moves table along X-axis (left and right) when turned ***ON***.

K. X-Axis Table Locks: Tighten to prevent X-axis table movement for increased rigidity during operations where the X-axis should not move.

L. Table: Equipped with four ½" T-slots for mounting workpiece. Adjusts in X-axis (left to right), Y-axis (front to back), and Z-axis (up and down).

M. X-Axis Handwheel: Manually moves table along X-axis (left and right).

N. Z-Axis Crank Handle: Manually moves table along Z-axis (up and down).

O. Y-Axis Table Locks: Tighten to prevent Y-axis table movement.

P. Z-Axis Table Lock: Tighten to secure table height setting.

Q. Y-Axis Handwheel: Manually moves table along Y-axis (front and back).

Power Feed Identification

Model G0810 is equipped with a power feed unit for X-axis table movement. Refer to **Figure 3** and the following descriptions to understand the functions of the various components of the power feed system.

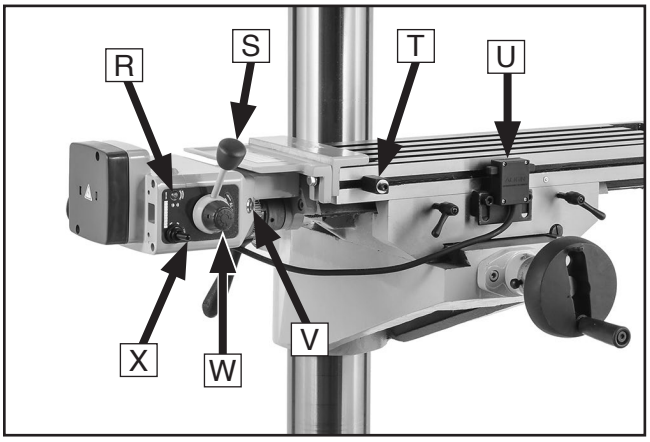

Figure 3. Power feed controls & components.

R. Reset Button: Resets internal circuit breaker if trips due to overload of power feed unit.

S. Direction Lever: Selects direction of table movement. Center position is neutral.

T. X-Axis Limit Stop (1 of 2 Shown): Limits X-axis table travel.

U. Limit Switch: Stops powered table movement when switch comes in contact with either limit stop.

V. Rapid Traverse Button: Moves table at full speed when already in motion.

W. Speed Dial: Controls speed of table movement. Turning dial clockwise causes table to move faster.

Note: *Feed rates for table travel are extremely difficult to precisely calculate. We recommend that you combine research and experimentation to find feed rates that best work for your operations.*

X. ON/OFF Switch: Enables/disables power to unit.

MACHINE DATA SHEET

Customer Service #: (570) 546-9663 · To Order Call: (800) 523-4777 · Fax #: (800) 438-5901

MODEL G0810 16" DRILL PRESS W/ CROSS-SLIDE TABLE & POWER FEED

Product Dimensions:

Weight	662 lbs.
Width (side-to-side) x Depth (front-to-back) x Height	42 x 39-1/2 x 65 in.
Footprint (Length x Width)	26 x 19 in.
Space Required for Full Range of Movement (Width x Depth)	56-1/2 x 39-1/2 in.

Shipping Dimensions:

Type	Wood Crate
Content	Machine
Weight	685 lbs.
Length x Width x Height	30 x 33 x 69 in.
Must Ship Upright	Yes

Electrical:

Power Requirement	220V, Single-Phase, 60 Hz
Full-Load Current Rating	11.5A
Minimum Circuit Size	15A
Connection Type	Cord & Plug
Power Cord Included	Yes
Power Cord Length	6 ft.
Power Cord Gauge	14 AWG
Plug Included	Yes
Included Plug Type	6-15
Switch Type	ON/OFF Push Button Switch

Motors:

Main

Horsepower	1.5 HP
Phase	Single-Phase
Amps	11.5A
Speed	1720 RPM
Type	TEFC Capacitor-Start Induction
Power Transfer	Belt Drive
Bearings	Shielded & Permanently Lubricated
Centrifugal Switch/Contacts Type	External

Main Specifications:

Operation Information

Swing	16 in.
Spindle Taper	MT#3
Spindle Travel	5-1/8 in.
Max. Distance From Spindle to Column	7-7/8 in.
Max. Distance From Spindle to Table	19-7/8 in.
Number of Spindle Speeds	12
Range of Spindle Speeds	150 – 3000 RPM
Drilling Capacity (Mild Steel)	1-1/4 in.
End Milling Capacity	3/4 in.
Face Milling Capacity	3 in.

Spindle Information

Distance From Spindle to Base	37-5/8 in.
Quill Diameter	75mm (2.95 in.)
Drawbar Thread Size	3/8-16

Table Information

Table Swivel Around Column	360 deg.
Longitudinal Travel	14-7/8 in.
Cross Travel	7 in.
Table Length	23-1/16 in.
Table Width	7-1/2 in.
Table Thickness	1-3/4 in.
Vertical Table Travel	20 in.
Number of T-Slots	4
T-Slot Size	1/2 in.
T-Slot Centers	1-1/2 in.

Construction

Table	Cast Iron
Column	Cast Iron
Spindle Housing	Cast Iron
Head	Cast Iron
Base	Cast Iron
Paint Type/Finish	Enamel

Other Related Information

Base Length	26 in.
Base Width	19 in.
Column Diameter	4-1/2 in.
Quill Flange/Collar Diameter	3-3/4 in.

Other Specifications:

Country of Origin	Taiwan
Warranty	1 Year
Approximate Assembly & Setup Time	1 Hour
Serial Number Location	ID Label
ISO 9001 Factory	Yes
Certified by a Nationally Recognized Testing Laboratory (NRTL)	No

Features:

MT#3 Spindle Taper
12 Speeds w/ Range of 150 – 3000 RPM
Four 1/2" T-Slots in the Table, Plus Two More in the Base
Longitudinal Power Feed on X-Axis Table with Independent Power Supply
360º Table Positioning Around Column
5-1/8" of Spindle Travel

Accessories Included:

Wrench 23/13mm
Hex Wrenches 3, 4, 5mm
MT#3 Arbor

SECTION 1: SAFETY

For Your Own Safety, Read Instruction Manual Before Operating This Machine

The purpose of safety symbols is to attract your attention to possible hazardous conditions. This manual uses a series of symbols and signal words intended to convey the level of importance of the safety messages. The progression of symbols is described below. Remember that safety messages by themselves do not eliminate danger and are not a substitute for proper accident prevention measures. Always use common sense and good judgment.

⚠DANGER **Indicates an imminently hazardous situation which, if not avoided, WILL result in death or serious injury.**

⚠WARNING **Indicates a potentially hazardous situation which, if not avoided, COULD result in death or serious injury.**

⚠CAUTION **Indicates a potentially hazardous situation which, if not avoided, MAY result in minor or moderate injury. It may also be used to alert against unsafe practices.**

NOTICE **Alerts the user to useful information about proper operation of the machine to avoid machine damage.**

Safety Instructions for Machinery

⚠WARNING

OWNER'S MANUAL. Read and understand this owner's manual BEFORE using machine.

TRAINED OPERATORS ONLY. Untrained operators have a higher risk of being hurt or killed. Only allow trained/supervised people to use this machine. When machine is not being used, disconnect power, remove switch keys, or lock-out machine to prevent unauthorized use—especially around children. Make your workshop kid proof!

DANGEROUS ENVIRONMENTS. Do not use machinery in areas that are wet, cluttered, or have poor lighting. Operating machinery in these areas greatly increases the risk of accidents and injury.

MENTAL ALERTNESS REQUIRED. Full mental alertness is required for safe operation of machinery. Never operate under the influence of drugs or alcohol, when tired, or when distracted.

ELECTRICAL EQUIPMENT INJURY RISKS. You can be shocked, burned, or killed by touching live electrical components or improperly grounded machinery. To reduce this risk, only allow qualified service personnel to do electrical installation or repair work, and always disconnect power before accessing or exposing electrical equipment.

DISCONNECT POWER FIRST. Always disconnect machine from power supply BEFORE making adjustments, changing tooling, or servicing machine. This prevents an injury risk from unintended startup or contact with live electrical components.

EYE PROTECTION. Always wear ANSI-approved safety glasses or a face shield when operating or observing machinery to reduce the risk of eye injury or blindness from flying particles. Everyday eyeglasses are NOT approved safety glasses.

⚠WARNING

WEARING PROPER APPAREL. Do not wear loose clothing, gloves, neckties, or jewelry that can become entangled in moving parts. Always tie back or cover long hair. Wear non-slip footwear to reduce risk of slipping and losing control or accidentally contacting cutting tool or moving parts.

HAZARDOUS DUST. Dust created by machinery operations may cause cancer, birth defects, or long-term respiratory damage. Be aware of dust hazards associated with each workpiece material. Always wear a NIOSH-approved respirator to reduce your risk.

HEARING PROTECTION. Always wear hearing protection when operating or observing loud machinery. Extended exposure to this noise without hearing protection can cause permanent hearing loss.

REMOVE ADJUSTING TOOLS. Tools left on machinery can become dangerous projectiles upon startup. Never leave chuck keys, wrenches, or any other tools on machine. Always verify removal before starting!

USE CORRECT TOOL FOR THE JOB. Only use this tool for its intended purpose—do not force it or an attachment to do a job for which it was not designed. Never make unapproved modifications—modifying tool or using it differently than intended may result in malfunction or mechanical failure that can lead to personal injury or death!

AWKWARD POSITIONS. Keep proper footing and balance at all times when operating machine. Do not overreach! Avoid awkward hand positions that make workpiece control difficult or increase the risk of accidental injury.

CHILDREN & BYSTANDERS. Keep children and bystanders at a safe distance from the work area. Stop using machine if they become a distraction.

GUARDS & COVERS. Guards and covers reduce accidental contact with moving parts or flying debris. Make sure they are properly installed, undamaged, and working correctly BEFORE operating machine.

FORCING MACHINERY. Do not force machine. It will do the job safer and better at the rate for which it was designed.

NEVER STAND ON MACHINE. Serious injury may occur if machine is tipped or if the cutting tool is unintentionally contacted.

STABLE MACHINE. Unexpected movement during operation greatly increases risk of injury or loss of control. Before starting, verify machine is stable and mobile base (if used) is locked.

USE RECOMMENDED ACCESSORIES. Consult this owner's manual or the manufacturer for recommended accessories. Using improper accessories will increase the risk of serious injury.

UNATTENDED OPERATION. To reduce the risk of accidental injury, turn machine ***OFF*** and ensure all moving parts completely stop before walking away. Never leave machine running while unattended.

MAINTAIN WITH CARE. Follow all maintenance instructions and lubrication schedules to keep machine in good working condition. A machine that is improperly maintained could malfunction, leading to serious personal injury or death.

DAMAGED PARTS. Regularly inspect machine for damaged, loose, or mis-adjusted parts—or any condition that could affect safe operation. Immediately repair/replace BEFORE operating machine. For your own safety, DO NOT operate machine with damaged parts!

MAINTAIN POWER CORDS. When disconnecting cord-connected machines from power, grab and pull the plug—NOT the cord. Pulling the cord may damage the wires inside. Do not handle cord/plug with wet hands. Avoid cord damage by keeping it away from heated surfaces, high traffic areas, harsh chemicals, and wet/damp locations.

EXPERIENCING DIFFICULTIES. If at any time you experience difficulties performing the intended operation, stop using the machine! Contact our Technical Support at (570) 546-9663.

Additional Safety for Drill Presses

⚠WARNING

Serious injury or death can occur from getting clothing, jewelry, or long hair entangled in rotating spindle or bit/cutting tool. Contact with rotating bit/cutting tool can result in severe cuts or amputation of fingers. Flying metal chips can cause blindness or eye injuries. Broken bits/cutting tools, unsecured workpieces, chuck keys, or other adjustment tools thrown from rotating spindle can strike nearby operator or bystanders with deadly force. To reduce the risk of these hazards, operator and bystanders MUST completely heed hazards and warnings below.

EYE/FACE/HAND PROTECTION. Flying chips created by drilling can cause eye injuries or blindness. Always wear a face shield in addition to safety glasses. Always keep hands and fingers away from drill bit/cutting tool. Avoid awkward hand positions, where a sudden slip could cause hand to move into bit/cutting tool.

AVOIDING ENTANGLEMENT. DO NOT wear loose clothing, gloves, or jewelry. Tie back long hair. Keep all guards in place and secure. Always allow spindle to stop on its own. DO NOT stop spindle using your hand or any other object.

REMOVING ADJUSTMENT TOOLS. Chuck key, wrenches, and other tools left on machine can become deadly projectiles when spindle is started. Remove all loose items or tools used on spindle immediately after use.

CORRECT SPINDLE SPEED. Using wrong spindle speed can cause bits/cutting tools to break and strike operator or bystanders. Follow recommended speeds and feeds for each size/type of bit/cutting tool and workpiece material.

SECURING BIT/CUTTING TOOL. Firmly secure bit/cutting tool in chuck so it cannot fly out of spindle during operation or startup.

DRILLING PREPARATION. To avoid loss of drilling control or bit breakage, only drill into a flat surface that is approximately perpendicular to bit. Clear table of all objects before starting spindle. Never start spindle with bit pressed against workpiece.

SECURING TABLE AND HEADSTOCK. To avoid loss of control leading to accidental contact with tool/bit, tighten all table and headstock locks before operating drill press.

WORKPIECE CONTROL. An unsecured workpiece may unexpectedly shift, spin out of control, or be thrown if bit/cutting tool "grabs" during operation. Clamp workpiece to table or in table-mounted vise, or brace against column to prevent rotation. NEVER hold workpiece by hand during operation. NEVER start machine with bit/cutting tool touching workpiece; allow spindle to gain full speed before drilling.

INSPECTING BIT/CUTTING TOOL. Damaged bits/cutting tools may break apart during operation and hit operator or bystanders. Dull bits/cutting tools increase cutting resistance and are more likely to grab and spin/throw workpiece. Always inspect bits/cutting tools for sharpness, chips, or cracks before each use. Replace dull, chipped, or cracked bits/cutting tools immediately.

SECTION 2: POWER SUPPLY

Availability

Before installing the machine, consider the availability and proximity of the required power supply circuit. If an existing circuit does not meet the requirements for this machine, a new circuit must be installed. To minimize the risk of electrocution, fire, or equipment damage, installation work and electrical wiring must be done by an electrician or qualified service personnel in accordance with all applicable codes and standards.



⚠WARNING

Electrocution, fire, shock, or equipment damage may occur if machine is not properly grounded and connected to power supply.

Full-Load Current Rating

The full-load current rating is the amperage a machine draws at 100% of the rated output power. On machines with multiple motors, this is the amperage drawn by the largest motor or sum of all motors and electrical devices that might operate at one time during normal operations.

Full-Load Current Rating at 220V ...11.5 Amps

The full-load current is not the maximum amount of amps that the machine will draw. If the machine is overloaded, it will draw additional amps beyond the full-load rating.

If the machine is overloaded for a sufficient length of time, damage, overheating, or fire may result—especially if connected to an undersized circuit. To reduce the risk of these hazards, avoid overloading the machine during operation and make sure it is connected to a power supply circuit that meets the specified circuit requirements.

Circuit Information

A power supply circuit includes all electrical equipment between the breaker box or fuse panel in the building and the machine. The power supply circuit used for this machine must be sized to safely handle the full-load current drawn from the machine for an extended period of time. (If this machine is connected to a circuit protected by fuses, use a time delay fuse marked D.)

⚠CAUTION

For your own safety and protection of property, consult an electrician if you are unsure about wiring practices or electrical codes in your area.

Note: *Circuit requirements in this manual apply to a dedicated circuit—where only one machine will be running on the circuit at a time. If machine will be connected to a shared circuit where multiple machines may be running at the same time, consult an electrician or qualified service personnel to ensure circuit is properly sized for safe operation.*

Circuit Requirements

This machine is prewired to operate on a power supply circuit that has a verified ground and meets the following requirements:

Nominal Voltage 208V, 220V, 230V, 240V
Cycle.....60 Hz
Phase..... Single-Phase
Power Supply Circuit ..... 15 Amps
Plug/Receptacle ..... NEMA 6-15

Grounding Requirements

This machine MUST be grounded. In the event of certain malfunctions or breakdowns, grounding reduces the risk of electric shock by providing a path of least resistance for electric current.

This machine is equipped with a power cord that has an equipment-grounding wire and a grounding plug. Only insert plug into a matching receptacle (outlet) that is properly installed and grounded in accordance with all local codes and ordinances. DO NOT modify the provided plug!

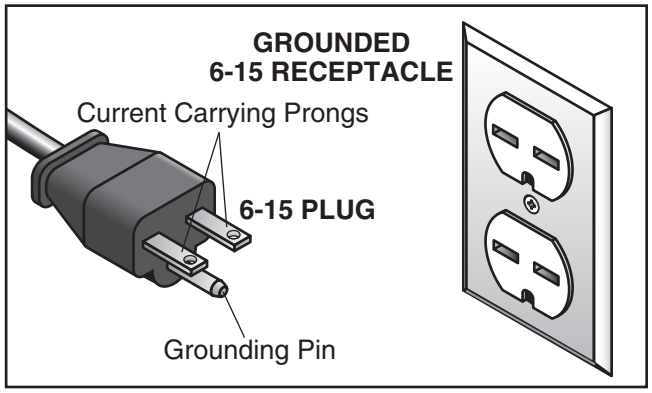

Figure 4. Typical 6-15 plug and receptacle.

⚠CAUTION

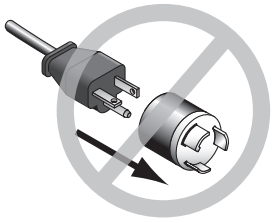

No adapter should be used with plug. If plug does not fit available receptacle, or if machine must be reconnected for use on a different type of circuit, reconnection must be performed by an electrician or qualified service personnel, and it must comply with all local codes and ordinances.

⚠WARNING

Serious injury could occur if you connect machine to power before completing setup process. DO NOT connect to power until instructed later in this manual.

Improper connection of the equipment-grounding wire can result in a risk of electric shock. The wire with green insulation (with or without yellow stripes) is the equipment-grounding wire. If repair or replacement of the power cord or plug is necessary, do not connect the equipment-grounding wire to a live (current carrying) terminal.

Check with a qualified electrician or service personnel if you do not understand these grounding requirements, or if you are in doubt about whether the machine is properly grounded. If you ever notice that a cord or plug is damaged or worn, disconnect it from power, and immediately replace it with a new one.

Extension Cords

We do not recommend using an extension cord with this machine. If you must use an extension cord, only use it if absolutely necessary and only on a temporary basis.

Extension cords cause voltage drop, which can damage electrical components and shorten motor life. Voltage drop increases as the extension cord size gets longer and the gauge size gets smaller (higher gauge numbers indicate smaller sizes).

Any extension cord used with this machine must be in good condition and contain a ground wire and matching plug/receptacle. Additionally, it must meet the following size requirements:

Minimum Gauge Size.....14 AWG
Maximum Length (Shorter is Better).....50 ft.

SECTION 3: SETUP

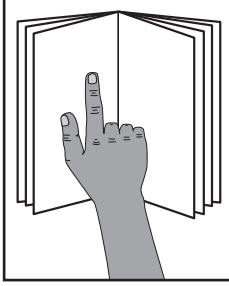

⚠WARNING

This machine presents serious injury hazards to untrained users. Read through this entire manual to become familiar with the controls and operations before starting the machine!



⚠WARNING

Wear safety glasses during the entire setup process!

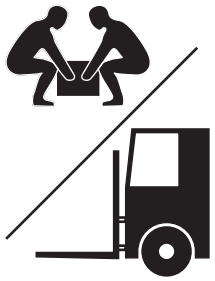

⚠WARNING

HEAVY LIFT!

Straining or crushing injury may occur from improperly lifting machine or some of its parts. To reduce this risk, get help from other people and use a forklift (or other lifting equipment) rated for weight of this machine.

Needed for Setup

The following items are needed, but not included, for the setup/assembly of this machine.

Description	Qty
• Safety Glasses (for each person)	1
• Cleaner/Degreaser	1
• Disposable Shop Rags	As Needed
• Lifting Slings (Rated for at least 800 lbs.)	2
• Lifting Equipment (Rated for at least 800 lbs.)	1
• Additional People	1
• Hex Wrench 2.5mm	1
• Hex Wrench 3mm	1
• Hex Wrench 5mm	1
• Hex Wrench 6mm	1
• Open-End Wrench 12mm	1
• Open-End Wrench 14mm	1
• Brass Hammer	1

Unpacking

This machine was carefully packaged for safe transport. When unpacking, separate all enclosed items from packaging materials and inspect them for shipping damage. ***If items are damaged, please call us immediately at (570) 546-9663.***

IMPORTANT: Save all packaging materials until you are completely satisfied with the machine and have resolved any issues between Grizzly or the shipping agent. *You MUST have the original packaging to file a freight claim. It is also extremely helpful if you need to return your machine later.*

Inventory

The following is a list of items shipped with your machine. Before beginning setup, lay these items out and inventory them.

If any non-proprietary parts are missing (e.g. a nut or a washer), we will gladly replace them; or for the sake of expediency, replacements can be obtained at your local hardware store.

NOTICE

If you cannot find an item on this list, carefully check around/inside the machine and packaging materials. Often, these items get lost in packaging materials while unpacking or they are pre-installed at the factory.

Component Inventory (Figure 5)	Qty
A. Hex Wrenches 3, 4, 5mm	1 Ea.
B. Revolving Handwheel Handles	3
C. Folding Handwheel Handle	1
D. Y-Axis Handwheel	1
E. Coarse Downfeed Lever Shafts	3
F. Coarse Downfeed Lever Handles	3
G. Wrench 13mm/23mm	1
H. Drift Key	1
I. X-Axis Handwheels	2
J. Z-Axis Crank	1
K. Milling Cutter Arbor MT3/JT6, 3/8"-16	1
L. X-Axis Power-Feed Bracket	1
M. X-Axis Power-Feed Unit	1
N. Gear Guard	1
O. Direction Lever Knob	1
P. Limit Switch Mounting Block	1
Q. X-Axis Leadscrew Gear	1
R. Cap Screws M8-1.25 x 12	2
S. Cap Screws 5/16"-18 x 3/4"	2
T. X-Axis Limit Stop Assemblies:	
—Limit Stops	2
—Cap Screws 1/4"-20 x 1 1/2"	2
—Flat Washers 1/4"	2
—Slide Nuts 1/4"-20	2
U. Cap Screw 3/8"-16 x 1"	1
V. Flat Washer 3/8"	1

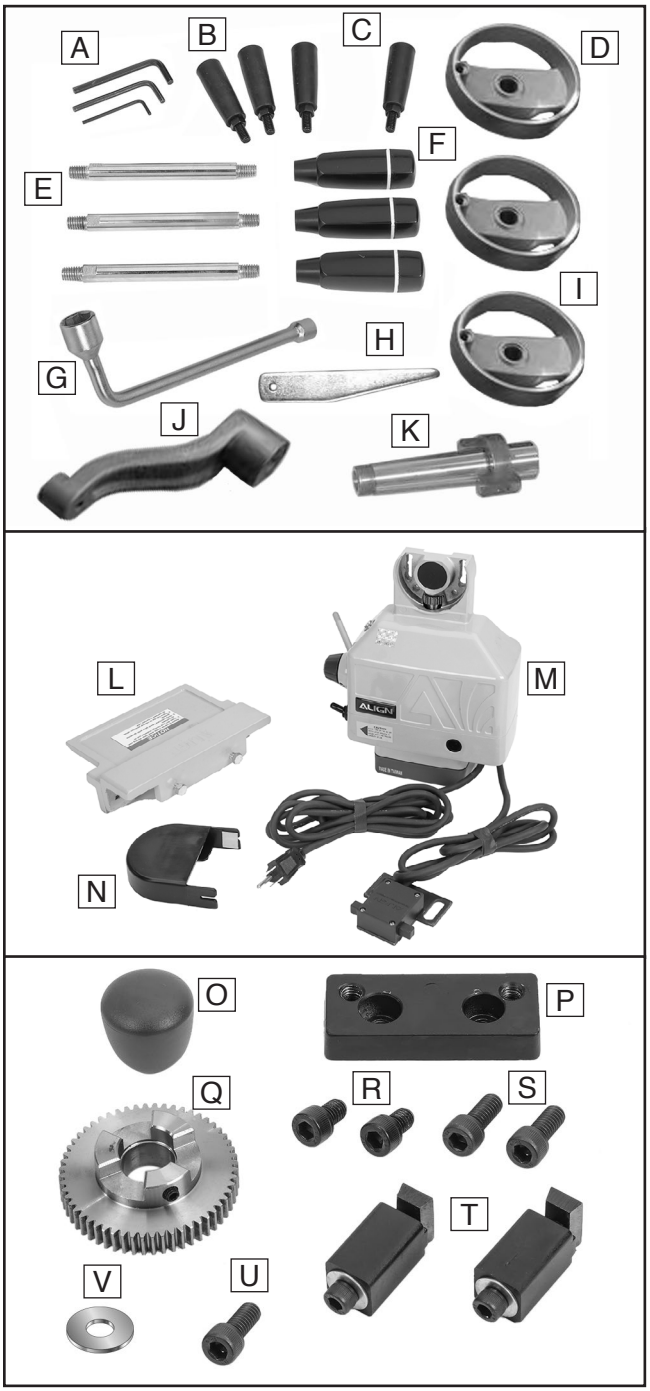

Figure 5. Component inventory.

Cleanup

The unpainted surfaces of your machine are coated with a heavy-duty rust preventative that prevents corrosion during shipment and storage. This rust preventative works extremely well, but it will take a little time to clean.

Be patient and do a thorough job cleaning your machine. The time you spend doing this now will give you a better appreciation for the proper care of your machine's unpainted surfaces.

There are many ways to remove this rust preventative, but the following steps work well in a wide variety of situations. Always follow the manufacturer's instructions with any cleaning product you use and make sure you work in a well-ventilated area to minimize exposure to toxic fumes.

Before cleaning, gather the following:
- Disposable rags
- Cleaner/degreaser (WD•40 works well)
- Safety glasses & disposable gloves
- Plastic paint scraper (optional)

Basic steps for removing rust preventative:

1. Put on safety glasses.

2. Coat the rust preventative with a liberal amount of cleaner/degreaser, then let it soak for 5–10 minutes.

3. Wipe off the surfaces. If your cleaner/degreaser is effective, the rust preventative will wipe off easily. If you have a plastic paint scraper, scrape off as much as you can first, then wipe off the rest with the rag.

4. Repeat **Steps 2–3** as necessary until clean, then coat all unpainted surfaces with a quality metal protectant to prevent rust.

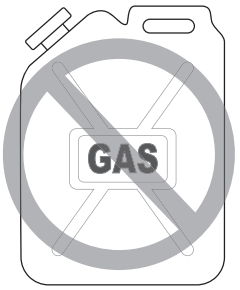

⚠WARNING

Gasoline and petroleum products have low flash points and can explode or cause fire if used to clean machinery. Avoid using these products to clean machinery.

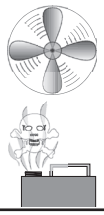

⚠CAUTION

Many cleaning solvents are toxic if inhaled. Only work in a well-ventilated area.

NOTICE

Avoid harsh solvents like acetone or brake parts cleaner that may damage painted surfaces. Always test on a small, inconspicuous location first.

Site Considerations

Weight Load

Refer to the **Machine Data Sheet** for the weight of your machine. Make sure that the surface upon which the machine is placed will bear the weight of the machine, additional equipment that may be installed on the machine, and the heaviest workpiece that will be used. Additionally, consider the weight of the operator and any dynamic loading that may occur when operating the machine.

Space Allocation

Consider the largest size of workpiece that will be processed through this machine and provide enough space around the machine for adequate operator material handling or the installation of auxiliary equipment. With permanent installations, leave enough space around the machine to open or remove doors/covers as required by the maintenance and service described in this manual. **See below for required space allocation.**

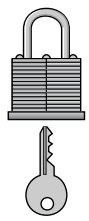

⚠CAUTION

Children or untrained people may be seriously injured by this machine. Only install in an access restricted location.

Physical Environment

The physical environment where the machine is operated is important for safe operation and longevity of machine components. For best results, operate this machine in a dry environment that is free from excessive moisture, hazardous chemicals, airborne abrasives, or extreme conditions. Extreme conditions for this type of machinery are generally those where the ambient temperature range exceeds 41°–104°F; the relative humidity range exceeds 20%–95% (non-condensing); or the environment is subject to vibration, shocks, or bumps.

Electrical Installation

Place this machine near an existing power source. Make sure all power cords are protected from traffic, material handling, moisture, chemicals, or other hazards. Make sure to leave enough space around machine to disconnect power supply or apply a lockout/tagout device, if required.

Lighting

Lighting around the machine must be adequate enough that operations can be performed safely. Shadows, glare, or strobe effects that may distract or impede the operator must be eliminated.

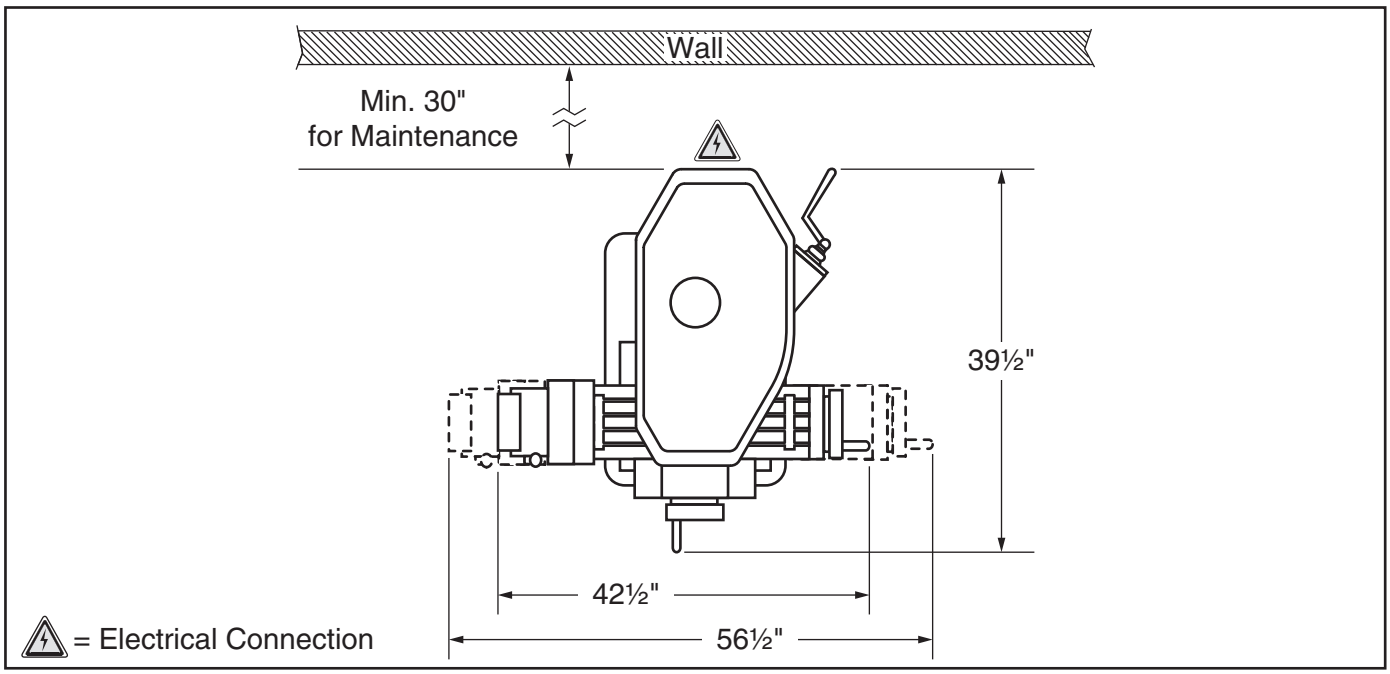

Figure 6. Minimum working clearances.

Lifting & Placing



⚠WARNING

HEAVY LIFT!

Straining or crushing injury may occur from improperly lifting machine or some of its parts. To reduce this risk, get help from other people and use a forklift (or other lifting equipment) rated for weight of this machine.

To lift and place machine:

1. Move shipping crate next to intended location of drill press, then remove top portion of crate from shipping pallet.

2. To help balance machine when moving, lower table as close to base as possible, and center it in X-axis, then tighten all table locks to avoid sudden shifts which could unbalance machine.

3. Place lifting slings around headstock, as shown in **Figure 7**, and attach them securely to forklift (or other power lifting equipment).

   Note: *Position slings far enough apart to avoid putting pressure on belt cover; otherwise, it can become damaged from the force of the slings while lifting.*

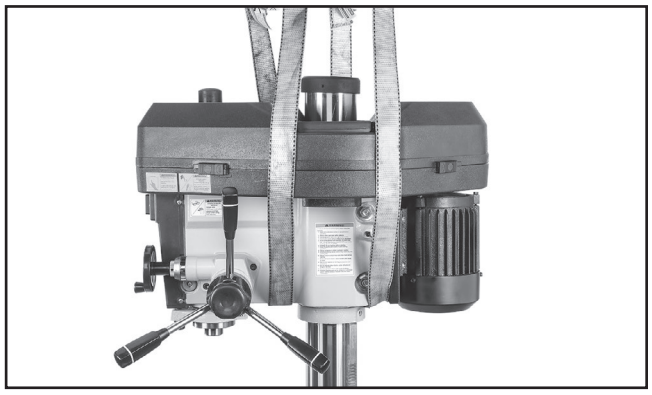

Figure 7. Example of lifting slings properly wrapped around headstock.

4. Unbolt machine from pallet.

5. With another person to help to steady machine, lift it just enough to clear pallet, then place it on shop floor.

Anchoring to Floor

Number of Mounting Holes 3
Diameter of Mounting Hardware..... ½"

Anchoring machinery to the floor prevents tipping or shifting and reduces vibration that may occur during operation, resulting in a machine that runs slightly more quietly and feels more solid.

If the machine will be installed in a commercial or workplace setting, or if it is permanently connected (hardwired) to the power supply, local codes may require that it be anchored to the floor.

If not required by any local codes, fastening the machine to the floor is an optional step. If you choose not to do this with your machine, we recommend placing it on machine mounts, as these provide an easy method for leveling and they have vibration-absorbing pads.

Anchoring to Concrete Floors

Lag shield anchors with lag screws (see below) are a popular way to anchor machinery to a concrete floor, because the anchors sit flush with the floor surface, making it easy to unbolt and move the machine later, if needed. However, anytime local codes apply, you MUST follow the anchoring methodology specified by the code.

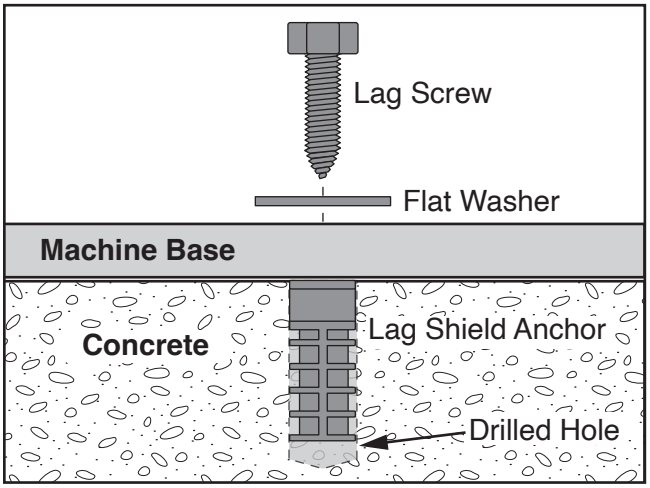

Figure 8. Anchoring machine to concrete floor.

Assembly

The machine must be fully assembled before it can be operated. Before beginning the assembly process, refer to **Needed for Setup** and gather all listed items. To ensure the assembly process goes smoothly, first clean any parts that are covered or coated in heavy-duty rust preventative (if applicable).

Assembly of Model G0810 consists of removing the wooden shipping braces, installing the revolving handles on the Z-Axis crank handle and handwheels, and installing the table handwheels, and X-axis power feed unit.

To assemble machine:

1. Attach Z-Axis crank to handle to crank bracket with included set screw (see **Figure 9**).

2. Thread one revolving handle into Z-axis crank handle, then tighten jam nut (see **Figure 9**).

3. Loosen Z-axis table lock (see **Figure 9**).

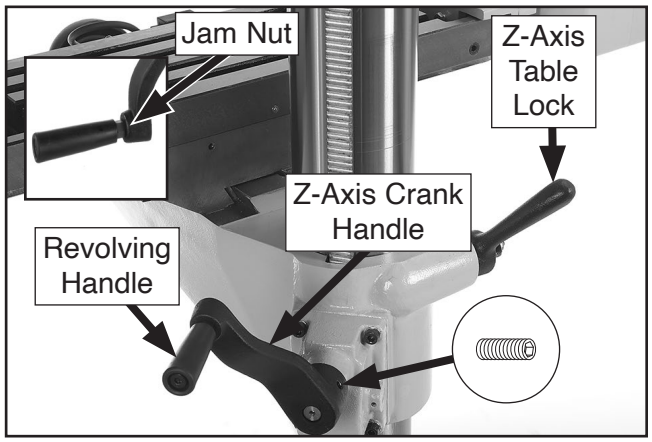

Figure 9. Location of Z-axis crank handle and table lock.

4. Use Z-axis crank handle to just slightly lower table.

Note: *Only exert mild pressure when lowering table during **Step 3**, otherwise you could damage knee by forcing it down against lower brace (see **Figure 10**).*

5. Remove upper brace, raise table slightly, then remove lower brace (see **Figure 10**).

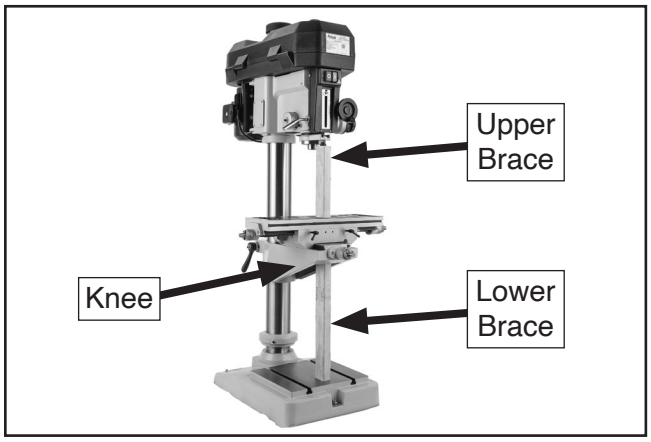

Figure 10. Wooden shipping braces to be removed during assembly.

6. Install lever shafts and handles onto coarse downfeed hub (see **Figure 11**).

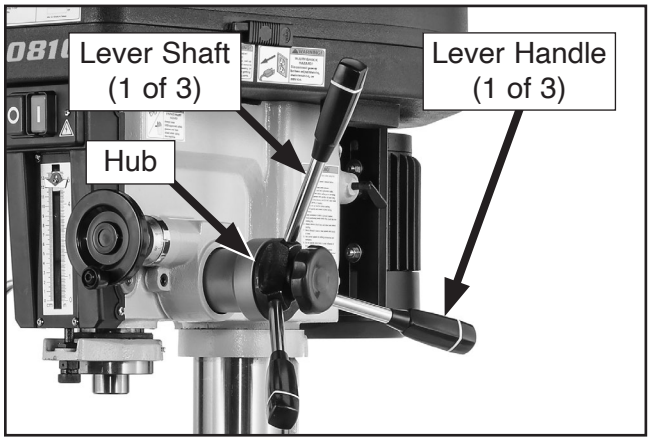

Figure 11. Coarse downfeed levers installed.

7. Slide leadscrew gear onto X-axis leadscrew and tighten set screw (see **Figure 12**).

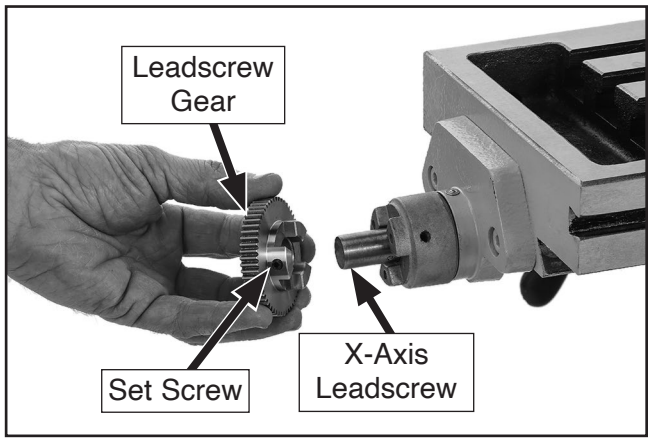

Figure 12. Installing X-axis leadscrew gear.

8. Install power feed bracket assembly onto left end of table, then tighten pre-installed mounting bolts (see **Figure 13**).

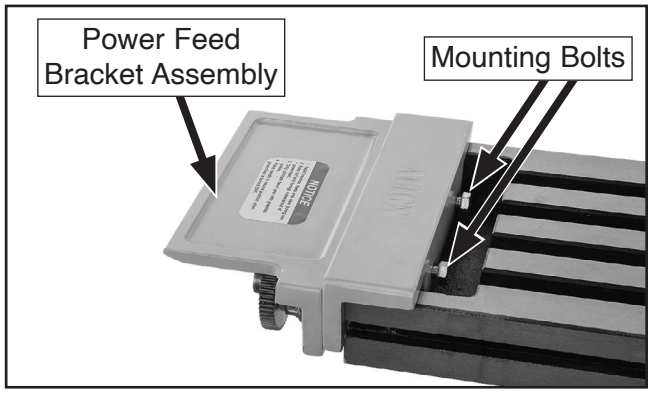

Figure 13. Power feed bracket assembly mounted to table.

9. Loosen hex bolts shown in **Figure 14**, then remove left side of bracket assembly.

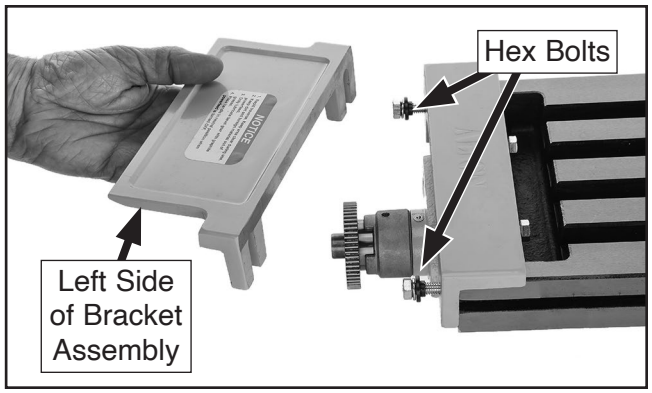

Figure 14. Left side of power feed bracket assembly removed.

10. Attach left side of bracket assembly to power feed unit with (2) ¼"-20 x 1" cap screws and (2) ¼" flat washers (see **Figure 15**). Hand-tighten cap screws for now.

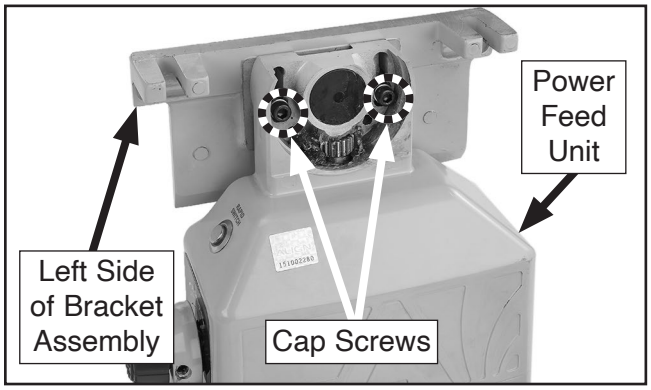

Figure 15. Left side of bracket assembly attached to power feed unit.

11. Slide bracket assembly with power feed unit onto hex bolts on other half of bracket assembly mounted to table (see **Figure 16**).

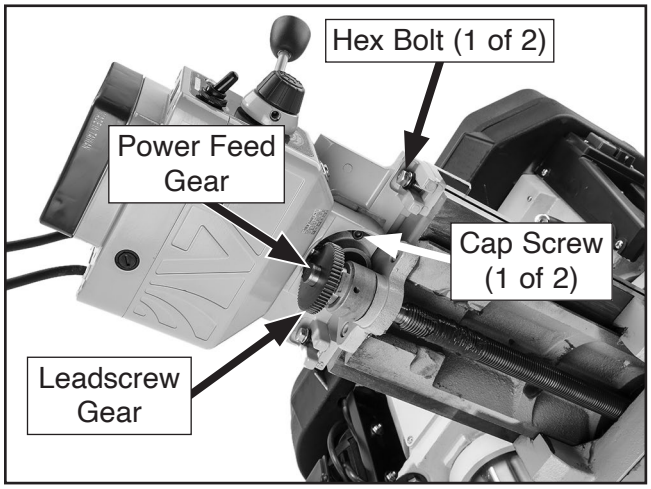

Figure 16. Left side of power feed bracket with attached power feed unit mounted to right side of bracket.

12. Move power feed unit until power feed gear teeth align with leadscrew gear teeth, then tighten cap screws from **Step 10** (see **Figure 15**).

13. Loosen hex bolts from **Step 9**, adjust power feed unit until power feed gear meshes with X-axis leadscrew gear, then fully tighten hex bolts (see **Figure 14**).

14. Install direction lever knob, as shown in **Figure 17**.

15. Remove adhesive backing from gear guard and install over X-axis table gear, as shown in **Figure 17**.

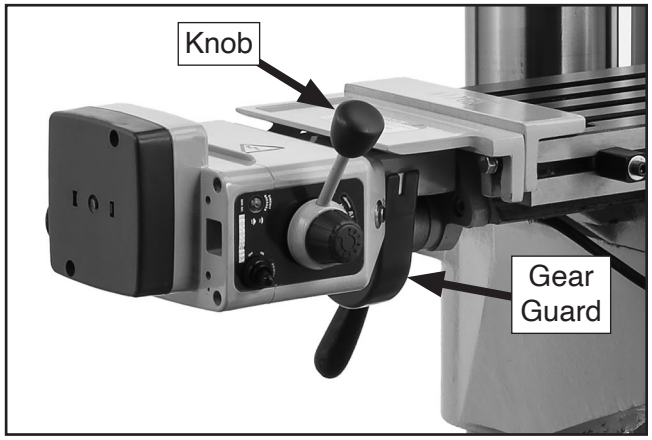

Figure 17. Direction lever knob and gear guard installed.

16. Remove factory-installed stop plate (see **Figure 18**), then use its mounting screws to install limit switch mounting block in its place (see **Figure 21**).

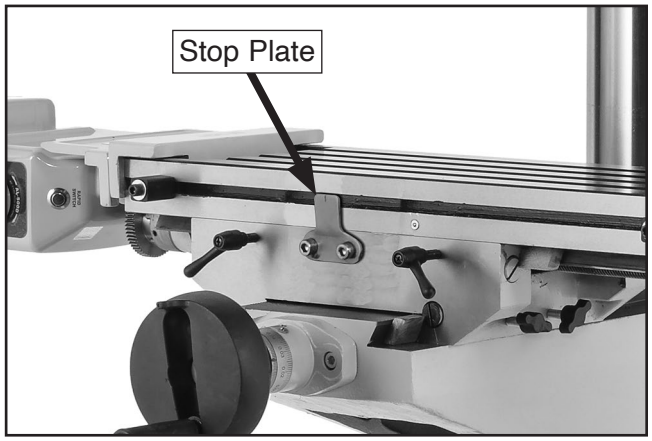

Figure 18. Location of factory-installed stop plate.

17. Loosen and remove factory-installed limit stops from front groove in table, then insert both accessory limit stop assemblies into same groove, as shown in **Figures 19–20**. Secure one at each end of table.

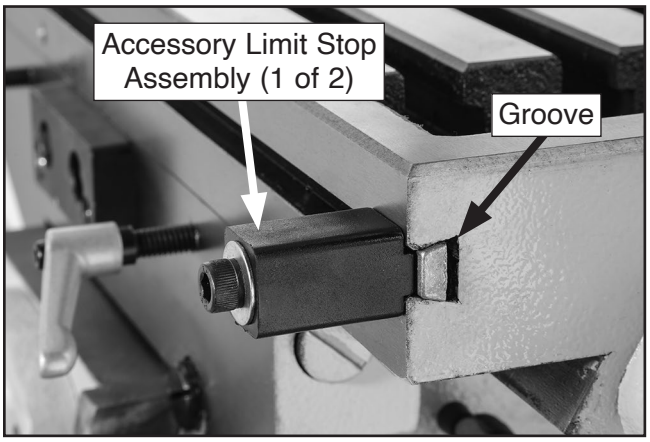

Figure 19. Accessory limit stop assembly mounted in table groove (1 of 2 shown).

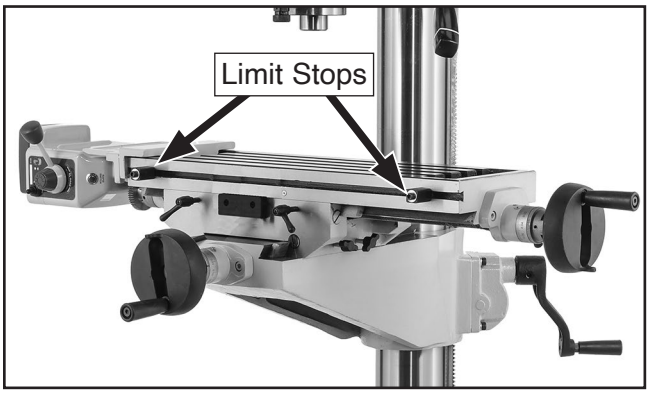

Figure 20. Accessory limit stops installed.

18. Install X-axis limit switch to mounting block using (2) M8-1.25 x 12 cap screws and (2) 8mm flat washers (see **Figure 21**).

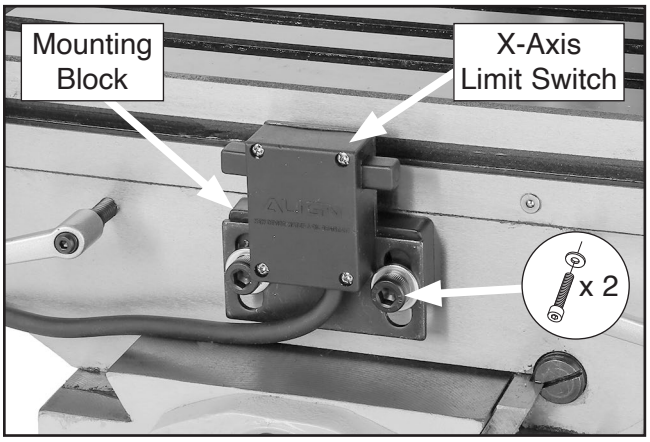

Figure 21. X-axis limit switch installed.

19. Mount handwheels to X-axis and Y-axis leadscrews (see **Figure 22**), then tighten set screws on base of handwheels to secure them (see **Figure 23**).

Note: *X-axis handwheel has M10-1.5 handle threads, and Y-axis handwheel has ⅜"-16 handle threads.*

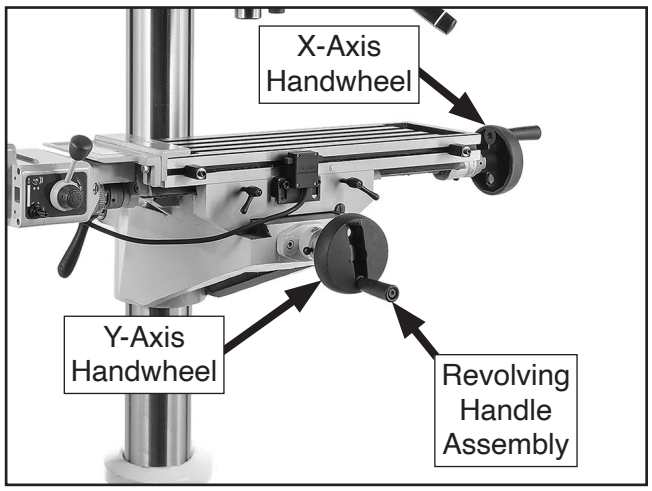

Figure 22. X- and Y-axis handwheels installed.

20. Thread folding handle into X-axis handwheel and revolving handle into Y-axis handwheel, then tighten jam nuts (see **Figure 23**), as with Z-axis crank handle on **Page 18**.

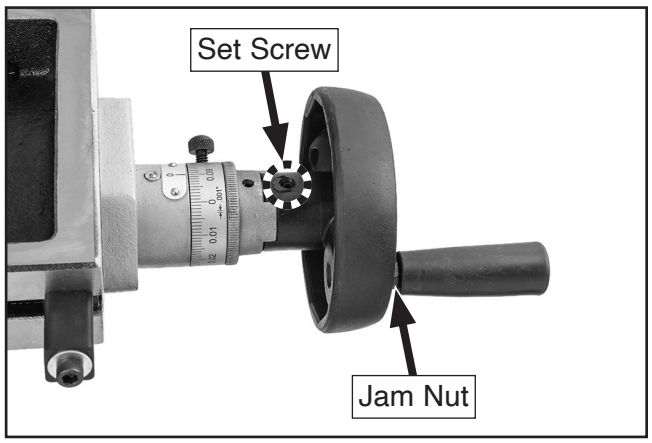

Figure 23. Set screw on base of handwheel (Y-axis shown).

Note: *The machine comes with an extra handwheel and revolving handle assembly. If you choose not to install the X-axis power feed, or decide to remove it, install the extra handwheel and handle assembly in its place.*

Test Run

Once assembly is complete, test run the machine to ensure it is properly connected to power and safety components are functioning correctly.

If you find an unusual problem during the test run, immediately stop the machine, disconnect it from power, and fix the problem BEFORE operating the machine again. The **Troubleshooting** table in the **SERVICE** section of this manual can help.

⚠WARNING

Serious injury or death can result from using this machine BEFORE understanding its controls and related safety information. DO NOT operate, or allow others to operate, machine until the information is understood.

⚠WARNING

DO NOT start machine until all preceding setup instructions have been performed. Operating an improperly set up machine may result in malfunction or unexpected results that can lead to serious injury, death, or machine/property damage.

To test run machine:

1. Clear all setup tools away from machine, then connect it to power supply.

2. Press green ON button (see **Figure 24**) to turn machine ***ON***. Verify motor starts up and runs smoothly without any unusual problems or noises, then press red OFF button (see **Figure 24**) to turn machine ***OFF***.

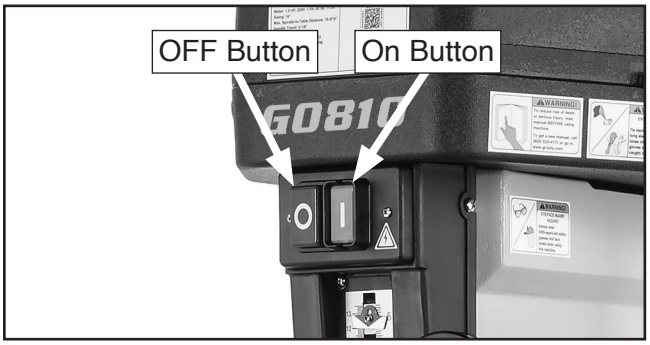

Figure 24. Power ON and OFF buttons.

Power Feed Test Run

The Model G0810 comes with a power feed unit for X-axis table travel. Proper operation of the limit switch attached to the front middle of the table is important to the operation of this power feed unit. If the power feed does not operate as expected during the following steps, disconnect it from power and refer to **Troubleshooting** on **Page 42**.

⚠CAUTION

During power feed operation, X-axis handwheels spin rapidly when engaged. Always stay clear of X-axis handwheels when using power feed. Failure to do so could lead to entanglement or impact injuries.

To test run power feed:

1. Make sure all tools, cables, and other items are well clear of table movement and potential direction of travel.

2. Refer to **Table Movement** on **Page 25** and **Operating Power Feed** on **Page 26** to understand table locks, power feed, and limit switch function.

3. Secure limit stops at far right and left of table to allow for maximum table movement during following steps.

4. Loosen X-axis locks on front of table.

5. Plug power cord into a grounded, matching power supply outlet.

6. Make sure power feed direction lever is in neutral (middle) position, turn speed dial counterclockwise to lowest setting, then move ON/OFF switch to ON position.

7. Rotate direction lever to the left, slowly turn speed dial clockwise to increase speed, then confirm that table is moving left. Allow table limit stop to hit limit switch and turn power feed ***OFF***. Table movement should stop.

   — If table movement *does not* stop, DISCONNECT POWER IMMEDIATELY and troubleshoot limit switch.

8. Repeat **Step 7**, but move table to the right by rotating direction lever all the way to the right.

9. Move direction lever all the way to the left, then press and hold Rapid Traverse Button for a few moments to confirm rapid traverse is operating correctly. Table should move rapidly to the left.

10. Turn speed dial to lowest setting, and move ON/OFF switch to OFF position.

    Congratulations! The **Test Run** is complete. Continue to the next page to perform the **Spindle Break-In** and **Inspections & Adjustments** procedures.

Spindle Break-In

NOTICE

You must complete this procedure to maintain the warranty. Failure to do this could cause rapid wear-and-tear of spindle bearings once they are placed under load.

The spindle break-in procedure distributes lubrication throughout the bearings to reduce the risk of early bearing failure if there are any "dry" spots or areas where lubrication has settled in the bearings. You ***must*** complete this procedure ***before*** placing operational loads on the spindle for the first time when the machine is new or if it has been sitting idle for longer than 6 months.

Always start the spindle break-in at the lowest speed to minimize wear if there *are* dry spots. Allow the spindle to run long enough to warm up and distribute the bearing grease, then incrementally increase spindle speeds and repeat this process at each speed until reaching the maximum spindle speed. Following the break-in procedure in this progressive manner helps minimize any potential wear that could occur before lubrication is fully distributed.

To perform spindle break-in procedure:

1. Successfully perform all steps in **Test Run** section beginning on **Page 21**.

2. Configure V-belts for a spindle speed of 150 RPM (refer to **Spindle Speed** beginning on **Page 27** for detailed instructions).

3. Connect machine to power, turn it ***ON***, and let it run for 10 minutes.

4. Turn machine ***OFF***, allow spindle to come to a complete stop, then DISCONNECT MACHINE FROM POWER!

5. Repeat **Steps 2–4** for 5 minutes in each of the following speeds, in this order: 255, 500, 850, 1500, 2300, and 3000 RPM.

   The spindle break-in is now complete.

Inspections & Adjustments

The following list of adjustments were performed at the factory before the machine was shipped:

- Gib Adjustments ..... **Page 44**
- Leadscrew Backlash Adjustments.. **Page 45**

Be aware that machine components can shift during the shipping process. Pay careful attention to these adjustments during operation of the machine. If you find that the adjustments are not set according to the procedures in this manual or your personal preferences, re-adjust them.

SECTION 4: OPERATIONS

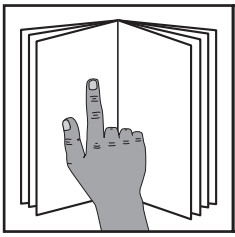

⚠WARNING

To reduce your risk of serious injury, read this entire manual BEFORE using machine.

⚠WARNING

To reduce risk of eye injury from flying chips or lung damage from breathing dust, always wear safety glasses and a respirator when operating this machine.



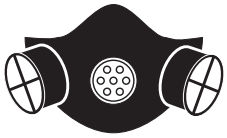

NOTICE

If you are not experienced with this type of machine, WE STRONGLY RECOMMEND that you seek additional training outside of this manual. Read books/magazines or get formal training before beginning any projects. Regardless of the content in this section, Grizzly Industrial will not be held liable for accidents caused by lack of training.

Operation Overview

The purpose of this overview is to provide the novice machine operator with a basic understanding of how the machine is used during operation, so the machine controls/components discussed later in this manual are easier to understand.

Due to the generic nature of this overview, it is **not** intended to be an instructional guide. To learn more about specific operations, read this entire manual, seek additional training from experienced machine operators, and do additional research outside of this manual by reading "how-to" books, trade magazines, or websites.

To complete typical operation, operator does following:

1. Examines workpiece to make sure it is suitable for drilling.

2. Installs correct tooling for operation.

3. Firmly secures workpiece to table using a vise or T-slot clamps.

4. Adjusts table height, then locks it in place.

5. Puts on required safety glasses and face shield.

6. Connects machine to power.

7. Selects spindle speed, properly tensions V-belts, then turns machine ***ON***.

8. Begins drilling operations.

9. When finished, turns machine ***OFF***, and disconnects machine from power.

Table Movement

The table travels in three directions (see **Figure 25**). This travel is controlled by table handwheels and the Z-axis crank handle. Additionally, the table can be moved along the X-axis with the power feed and manually rotated 360° around the column.

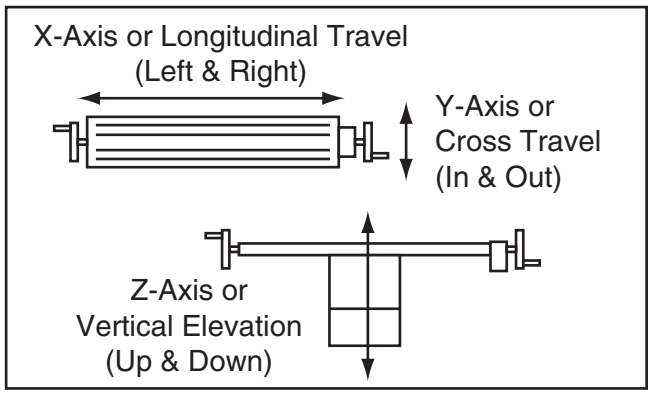

Figure 25. The directions of table movement.

Graduated Collars

The table handwheels have graduated collars (see **Figure 26**) that are used to determine table movement in 0.001" increments with one full revolution equaling 0.100" of travel.

Additionally, each collar has a thumb screw that is used to adjust the dial to "0".

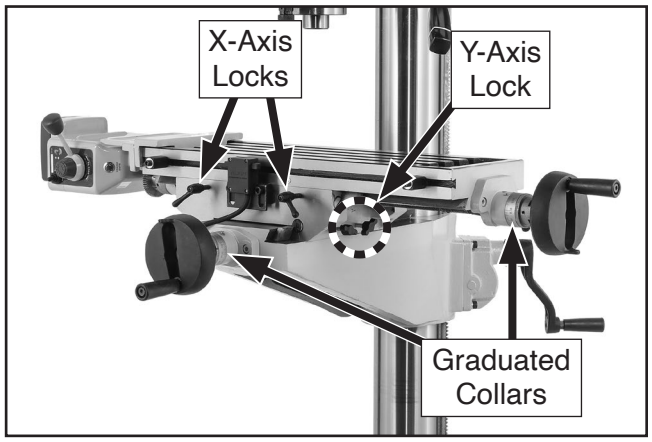

Figure 26. Locations of graduated collars and X-axis and Y-axis table locks.

Table Locks

Use table locks to increase the rigidity of the table when movement in that axis is not required for the operation.

Refer to **Figure 27** to identify the locks for each table axis.

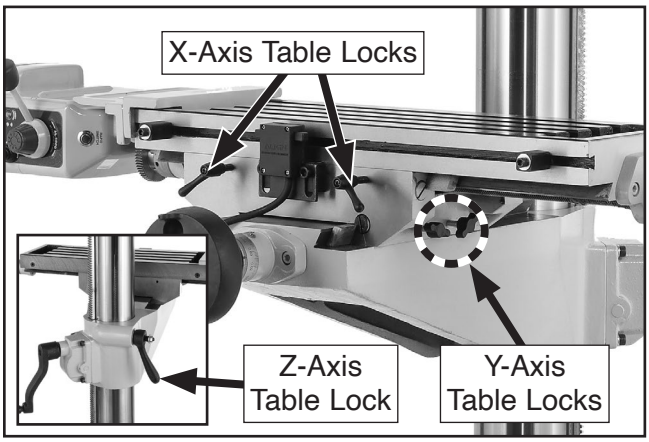

Figure 27. Location of table locks.

NOTICE

Always keep table locked in place unless table movement is required. Unexpected table and workpiece movement could cause tooling to bind with workpiece, which may damage tooling or workpiece.

Limit Stops

Use the limit stops (see **Figure 27**) in conjunction with the power feed to set the total amount of travel. The limit stops come into contact with the limit switch and stop power feed motion.

If not being used, position stops as far away from limit switches as possible, so as not to interfere with table movement.

Tools Needed **Qty**
Hex Wrench 5mm..... 1

To adjust the position of the limit stops (see **Figure 28**), loosen the cap screws that secure the stops, move the stops to the desired positions, then tighten securely.

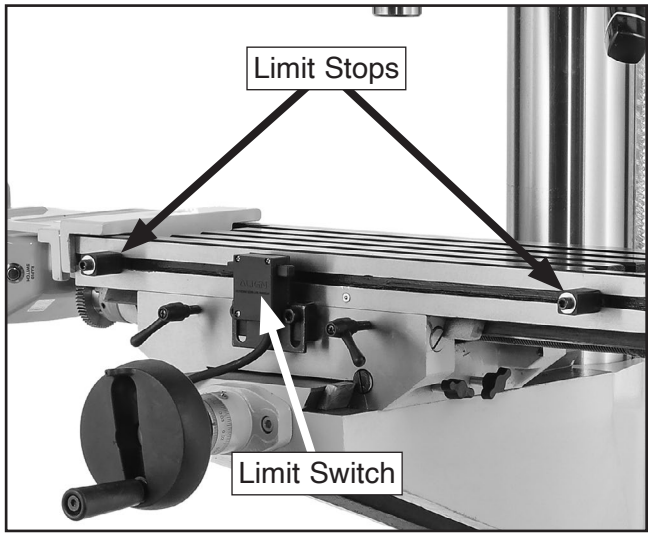

Figure 28. Location of stops and limit switch.

Operating Power Feed

1. Loosen table locks.

2. Turn speed dial (see **Figure 28**) all the way counterclockwise to slowest setting.

3. Move direction lever to neutral (middle) position, then move ON/OFF switch (see **Figure 28**) to ON position.

4. With your hand poised over ON/OFF switch in case you need to suddenly turn unit ***OFF***, move direction lever (see **Figure 29**) to select direction of table travel.

5. Rotate speed dial clockwise (see **Figure 29**) to slowly bring speed of movement up to desired rate.

   To cause table to instantly move at full speed when already in motion, press and hold rapid traverse button (see **Figure 29**). The table will resume previous speed when button is released.

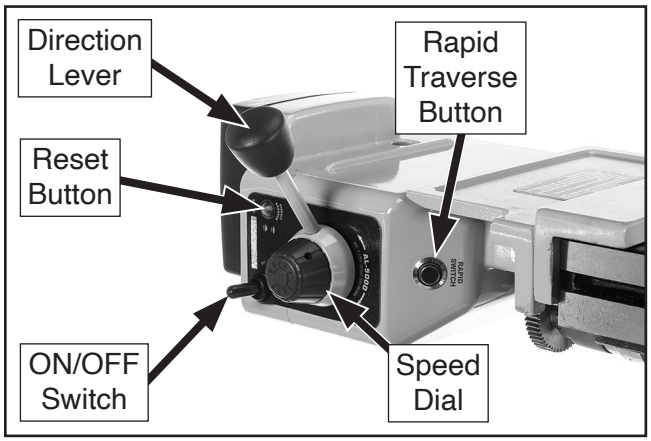

Figure 29. Power feed controls.

6. When you are finished using power feed, turn unit ***OFF***, rotate speed dial all the way counterclockwise, and move direction lever to neutral (middle) position to avoid unexpected table movement later.

   For additional component details, refer to **Power Feed Identification** on **Page 5**.

Spindle Speed

Using the correct spindle speed is important for safe and satisfactory results, as well as maximizing tool life.

To set the spindle speed for your operation, you will need to: 1) Determine the best spindle speed for the cutting task, and 2) configure the spindle controls to match the closest spindle speed.

Determining Spindle Speed

Many variables affect the optimum spindle speed to use for any given operation, but the two most important are the recommended cutting speed for the workpiece material and the diameter of the cutting tool, as noted below.

$$\frac{*\text{Recommended Cutting Speed (FPM)} \times 12}{\text{Tool Dia. (in inches)} \times 3.14} = \text{Spindle Speed (RPM)}$$

*Double if using carbide cutting tool

Figure 30. Spindle speed formula for milling.

Cutting speed, typically defined in feet per minute (FPM), is the speed at which the edge of a tool moves across the material surface.

The "Recommended Cutting Speed" varies depending on the type of workpiece material. It is the ideal speed for cutting that material in order to optimize tool life and produce a desirable finish.

The books **Machinery's Handbook** or **Machine Shop Practice**, and some internet sites, provide excellent recommendations for which cutting speeds to use when calculating the spindle speed. These sources also provide a wealth of additional information about the variables that affect cutting speed and they are a good educational resource.

Also, there are a large number of easy-to-use spindle speed calculators that can be found on the internet. These sources will help you take into account all applicable variables to determine the best spindle speed for the operation.

Setting Spindle Speed

The Model G0810 has twelve spindle speeds, which are selected by positioning the V-belts in various configurations on the pulleys.

Tools Needed	**Qty**
Wrench or Socket 12mm	1

To set spindle speed:

1. DISCONNECT MACHINE FROM POWER!
2. Open V-belt cover.
3. Support motor with one hand and loosen motor lock shown in **Figure 31**.

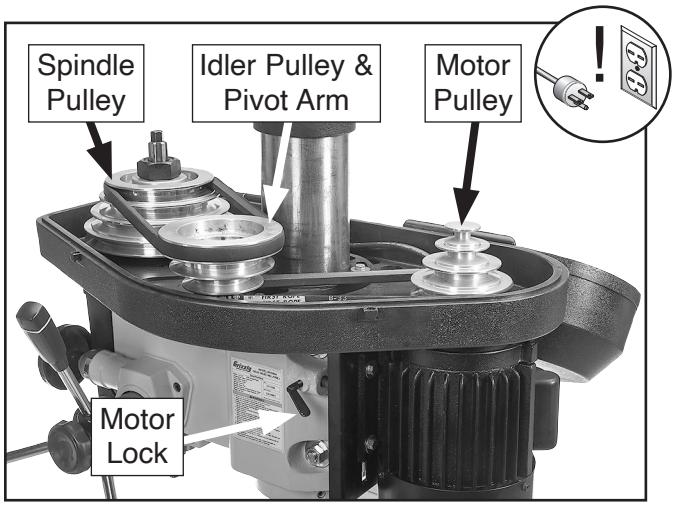

Figure 31. Location of V-belts and pulleys.

4. Press motor toward front of headstock to release tension on motor V-belt, then tighten motor lock to prevent it from re-tensioning belt.

5. Loosen both hex bolts that secure idler pivot arm (see **Figure 32**).

6. Push idler pulley toward front of headstock to release tension on idler V-belt (see **Figure 32**).

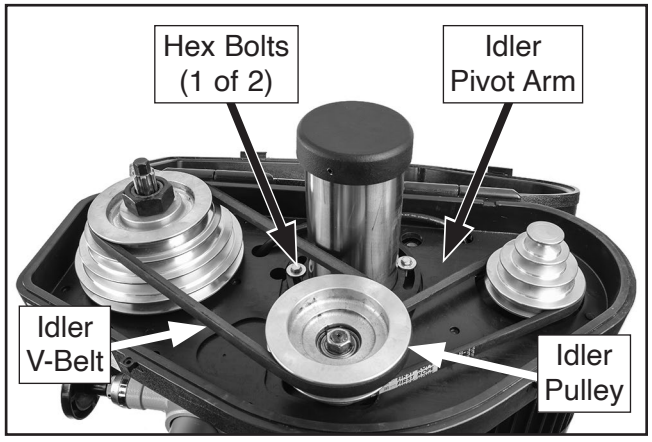

Figure 32. Location of idler pivot arm with hex bolts, idler pulley, and idler V-belt.

7. Refer to V-belt configuration chart in **Figure 33** (or chart inside V-belt cover) to configure V-belts on pulleys for selected spindle speed.

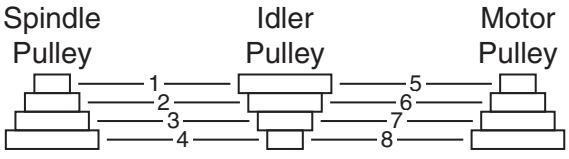

RPM	Belt Position	RPM	Belt Position
150	4–5	850	1–6
225	3–5	1200	2–7
255	4–6	1500	3–8
350	2–5	1600	1–7
400	3–6	2300	2–8
500	4–7	3000	1–8

Figure 33. V-belt configuration chart.

8. When V-belts are properly positioned on pulleys, loosen motor lock, pull motor away from machine with moderate force to tension V-belts, then retighten motor lock.

9. Check V-belt tension by applying moderate pressure on belt with your finger between two pulleys. The proper amount of belt deflection for this machine is approximately ½" (see **Figure 34**).

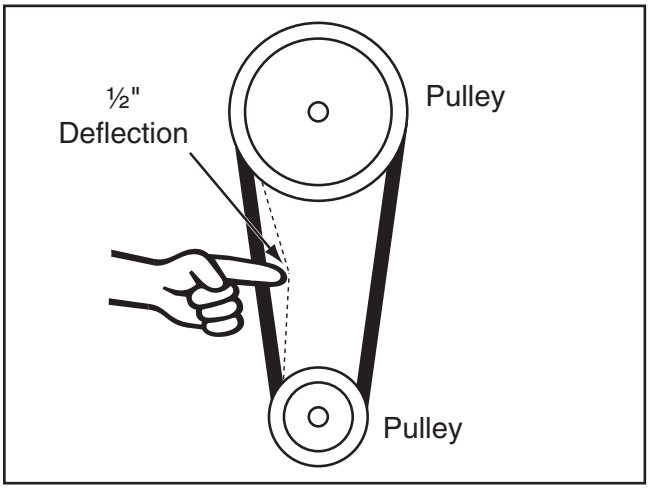

Figure 34. The correct amount of V-belt deflection when properly tensioned.

10. Close V-belt cover before beginning operations.

Configuration Example

Figure 35 shows the V-belts configured on the pulleys for a spindle speed of 1500 RPM.

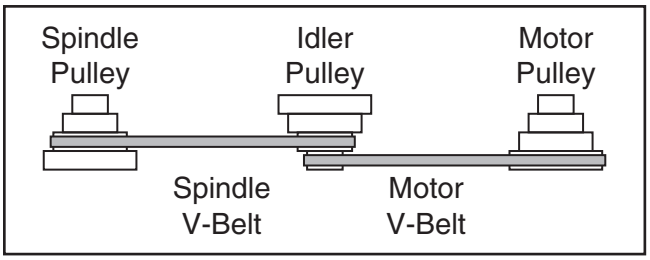

Figure 35. Example of V-belts configured for a spindle speed of 1500 RPM.

Calculating Spindle Speed for Drilling

Using the Drilling Speed Chart

The chart shown in **Figure 35** is intended as a guide only. Always follow the manufacturer's speed recommendations if provided with your drill bits, cutters, or hole saws. Exceeding the recommended speeds may be dangerous to the operator or cause damage to the tooling.

The speeds shown here are intended to get you started. The optimum speed will always depend on various factors, including tool diameter, drilling pressure, material hardness, material quality, and desired finish.

Often, when drilling materials other than wood, some type of lubrication is necessary.

Lubrication Suggestions

Wood .....None
Plastics .....Soapy Water
Brass .....Water-Based Lubricant
Aluminum..... Paraffin-Based Lubricant
Mild Steel..... Oil-Based Lubricant

⚠CAUTION

Larger bits turning at slower speeds tend to grab the workpiece aggressively. This can result in the operator's hand being pulled into the bit or the workpiece being thrown with great force. Always clamp the workpiece to the table to prevent injuries.

Twist/Brad Point Drill Bits	Soft Wood	Hard Wood	Plastic	Brass	Aluminum	Mild Steel
1/16" – 3/16"	3000	2500	2500	2500	3000	2500
13/64" – 3/8"	2000	1500	2000	1250	2500	1250
25/64" – 5/8"	1500	750	1500	750	1500	600
11/16" – 1"	750	500	1000	400	1000	350

Spade/Forstner Bits	Soft Wood	Hard Wood	Plastic	Brass	Aluminum	Mild Steel
1/4" – 1/2"	2000	1500				
9/16" – 1"	1500	1250				
1-1/8" – 1-7/8"	1000	750				
2–3"	500	350				

Hole Saws	Soft Wood	Hard Wood	Plastic	Brass	Aluminum	Mild Steel
1/2" – 7/8"	500	500	600	600	600	500
1" – 1-7/8"	400	400	500	500	500	400
2" – 2-7/8"	300	300	400	400	400	300
3" – 3-7/8"	200	200	300	300	300	200
4" – 5"	100	100	200	200	200	100

Rosette Cutters	Soft Wood	Hard Wood	Plastic	Brass	Aluminum	Mild Steel
Carbide Insert Type	350	250				
One-Piece Type	1800	500				

Tenon/Plug Cutters	Soft Wood	Hard Wood	Plastic	Brass	Aluminum	Mild Steel
3/8" – 1/2"	1200	1000				
5/8" – 1"	800	600				

Figure 36. Drilling speed chart.

Spindle Downfeed

Spindle downfeed movement on the drill press is controlled by two mechanisms: 1) The coarse downfeed lever, and 2) the fine downfeed handwheel (see **Figure 37**). Refer to **Controls & Components** on **Page 4** for detailed descriptions of all downfeed controls and components.

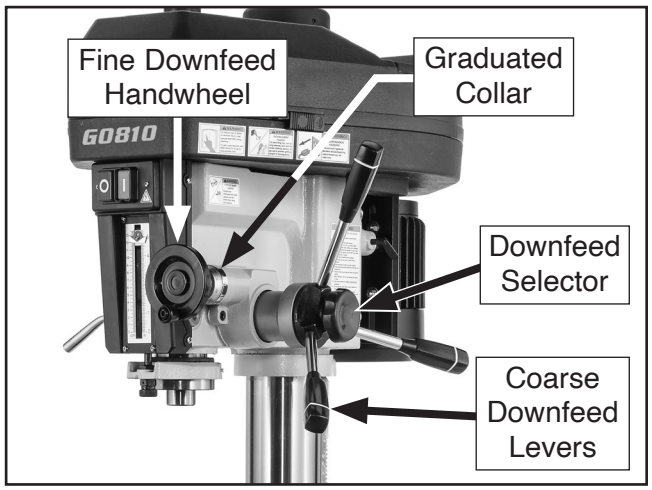

Figure 37. Location of spindle downfeed controls.

Using Coarse Downfeed

Coarse downfeed is typically used for drilling, because it allows you to quickly lower the spindle with varying speed/pressure, and it automatically retracts the spindle back to the top position when released.

To engage coarse downfeed, make sure the spindle is completely stopped, and loosen the downfeed selector (see **Figure 37**).

Note: *To maintain control of the upward spindle travel, always continue holding the coarse downfeed levers until the spindle returns to the top position. Letting go of the levers too soon will cause the spindle to retract too quickly and slam up into the headstock.*

Using Fine Downfeed

Fine downfeed is typically used for precise, non-retractable Z-axis positioning of a cutter or end-mill when milling a flat surface across the face of a workpiece. The fine downfeed handwheel is equipped with a graduated collar (see **Figure 37**) with 0.001" increments. Each complete revolution of the handwheel equals 0.100".

In order to ensure the milled surface remains flat, the quill lock lever should be locked after each adjustment to ensure the spindle height cannot move until the entire milling operation is complete.

To engage fine downfeed, make sure the spindle is completely stopped, and tighten the downfeed selector. Rotate the fine downfeed handwheel to raise or lower the spindle (see **Figure 37**).

Setting Depth Stop

The depth stop limits the drilling depth or downward movement of the cutting tool. The maximum depth is 5". This is useful when performing the same operation multiple times.

Note: *The depth stop scale functions as a general guide only. It is not intended for tight-tolerance, precision results. To calibrate the depth stop see* ***Calibrating Depth Stop*** *on* ***Page 41.***

To set depth stop:

1. DISCONNECT MACHINE FROM POWER!

2. Install tooling (refer to **Loading/Unloading Tooling**), then make sure spindle is drawn all the way up into headstock.

3. Loosen Z-axis table lock, and raise table until workpiece is approximately ⅛" below tooling.

4. Rotate depth stop adjustment knob until top of depth stop pointer is level with desired depth as listed on scale (see **Figure 38**).

   Note: *The depth stop scale and pointer indicate depth of vertical spindle travel, which is not necessarily equal to drilling/milling depth. Be sure to compensate for variables, such as clearance between workpiece and tool when setting the depth stop. For example, if there is ⅛" clearance between the workpiece and tooling, add ⅛" to the depth stop setting.*

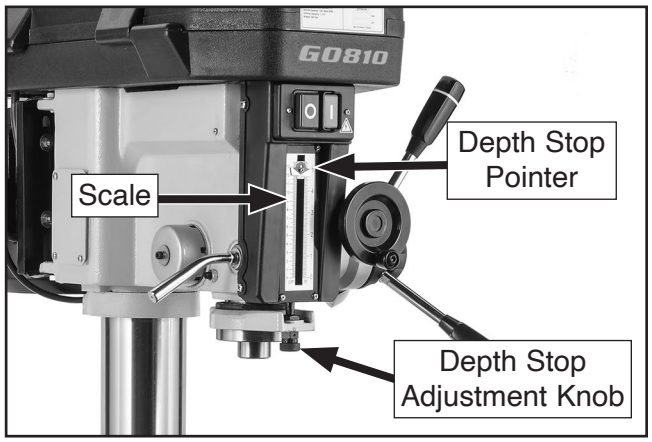

Figure 38. Location of depth stop controls.

Loading/Unloading Threaded Tooling

Threaded tooling is held in the spindle by the combination of a drawbar (see **Figure 39**) and a press fit or "friction fit" when the tooling taper matches the spindle taper.

This machine is equipped with an MT#3 spindle taper and a ⅜"-16 drawbar.

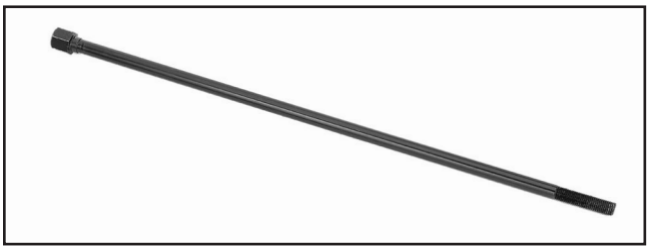

Figure 39. ⅜"-16 spindle drawbar.

Loading Threaded Tooling

Tool Needed	Qty
Wrench or Socket 17mm	1

To load threaded tooling:

1. DISCONNECT MACHINE FROM POWER!

2. Clean any debris or oily substances from inside spindle taper and mating surface of tooling.

Note: *Debris or oily substances can prevent tooling and spindle from properly mating. This condition can cause excessive vibration, poor cutting results, or tool/workpiece damage.*

3. Open V-belt cover, and insert drawbar through top of spindle (see **Figure 40**).

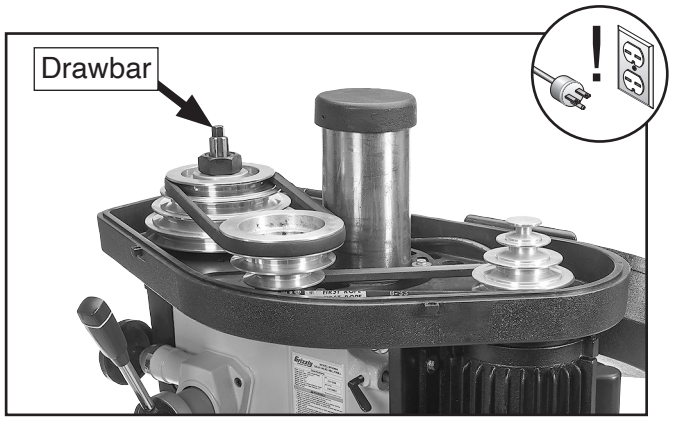

Figure 40. Drawbar inserted through top of spindle.

4. Insert MT#3 tooling into spindle, and maneuver tang until it engages with slot at end of spindle, then thread drawbar into tool by hand until it is snug (see **Figure 41**).

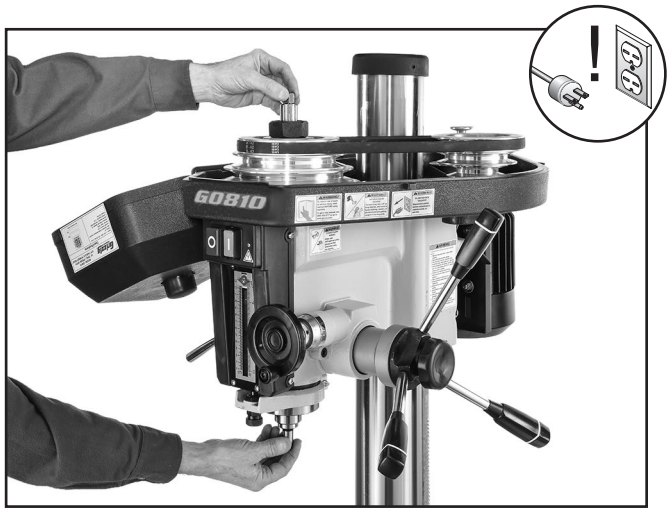

Figure 41. Threading drawbar into tooling.

5. Use wrench to tighten drawbar an additional ¼-turn.

   Note: *Do not overtighten drawbar. Overtightening makes tool removal difficult and may damage arbor and threads.*

6. Close V-belt cover.

Unloading Threaded Tooling

Tools Needed	**Qty**
Wrench or Socket 17mm	1
Brass or Dead-Blow Hammer	1

To unload threaded tooling:

1. DISCONNECT MACHINE FROM POWER!

2. Loosen drawbar one full rotation.

   Note: *Make sure drawbar has at least three threads engaged with tooling, or drawbar and tool threads could be damaged in next step.*

3. Tap top of drawbar with brass or dead-blow hammer to unseat taper (see **Figure 42**).

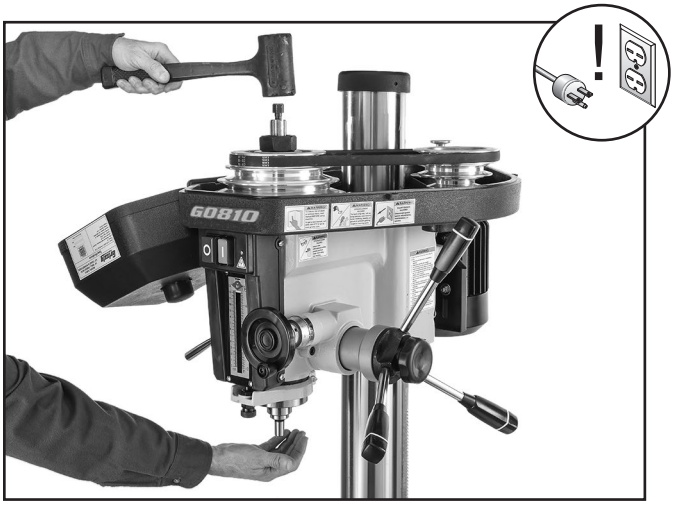

Figure 42. Tapping drawbar to unseat tool taper.

4. Support tool with one hand and fully unthread drawbar from tool.

Loading/Unloading Tanged Tooling

Tanged tooling (see **Figure 43**) is held in the spindle by a press fit or "friction fit" when the tooling taper matches the spindle taper. The tang engages with a slot in the spindle to prevent the tool from spinning freely.

This machine is equipped with drift key and drift key holes in the spindle and quill to assist in the removal of tanged tooling (see **Figure 43**).

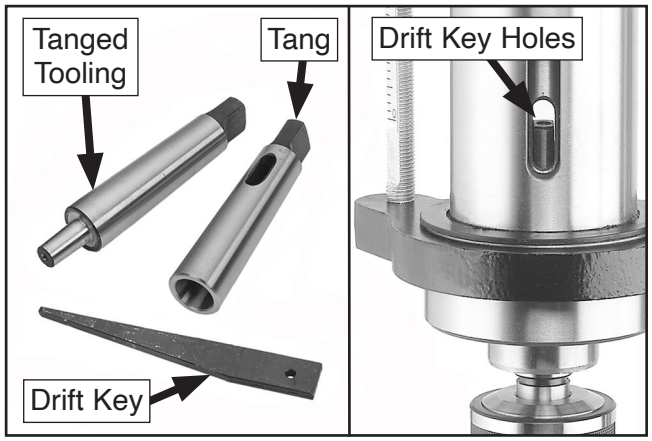

Figure 43. Example of tanged MT#3 tooling, drift key, and drift key holes in quill/spindle.

Loading Tanged Tooling

Tools Needed **Qty**
Rubber or Wooden Mallet 1

To load tanged tooling:

1. DISCONNECT MACHINE FROM POWER!

2. Remove drawbar.

3. Clean any debris or oily substances from mating surfaces of spindle taper and tooling.

Note: *Debris or oily substances can prevent tooling and spindle from properly mating. This condition can cause excessive vibration, poor cutting results, or tool/workpiece damage.*

4. Insert MT#3 tooling into spindle, and engage tang (see **Figure 43**) with slot inside spindle.

5. Use rubber or wooden mallet to seat tooling into spindle by firmly tapping from bottom.

Note: *If installing a drill chuck, retract jaws to prevent damage to chuck when tapping with a mallet.*

Unloading Tanged Tooling

Tools Needed **Qty**
Drift Key 1
Rubber or Wooden Mallet 1

To unload tanged tooling:

1. DISCONNECT MACHINE FROM POWER!

2. Lower quill and rotate spindle by hand until drift key holes in spindle and quill are aligned (see **Figure 43**).

3. Insert drift key into aligned holes (see **Figure 44**) and allow quill to rise, trapping drift key.

4. Use rubber or wooden mallet (see **Figure 44**) to softly tap end of key while holding arbor/chuck assembly until it separates from spindle.



Figure 44. Example of using drift key and mallet to remove tanged tooling.

SECTION 5: ACCESSORIES

⚠WARNING

Installing unapproved accessories may cause machine to malfunction, resulting in serious personal injury or machine damage. To reduce this risk, only install accessories recommended for this machine by Grizzly.

NOTICE

Refer to our website or latest catalog for additional recommended accessories.

H7527— 6" Rotary Table w/ Dividing Plates
Use this 6" rotary table in either the horizontal or vertical position for a variety of milling applications and with the set of dividing plates and adjustable tailstock, your milling applications are nearly unlimited. With 4 degrees of table movement per handle rotation and a 20 second vernier scale, control is very accurate and precise. Also includes a ⅜" clamping set for the 4-slot table. Everything you need in one great set!

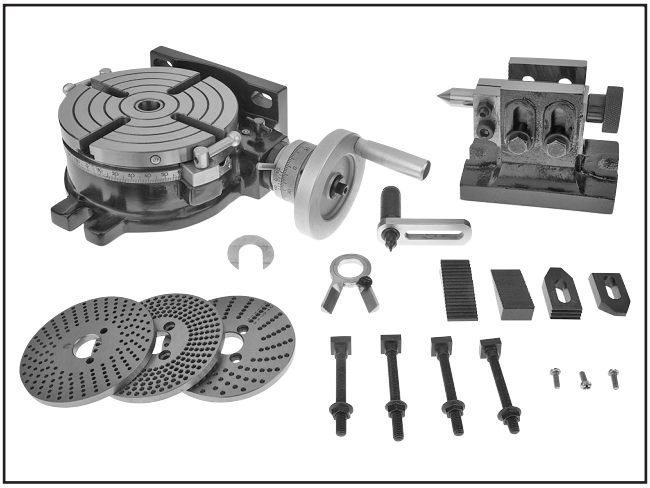

Figure 45. H7527 6" Rotary Table w/Dividing Plates.

G7156—4" (3 ⅝") Precision Milling Vise
G7154—5" (4 ½") Precision Milling Vise
Swiveling Milling Vises feature perfectly aligned, precision ground jaws, large Acme® screws and easy to read 0°–360° scales.

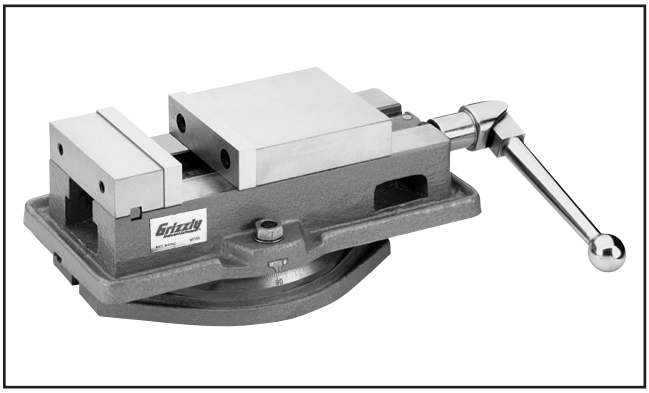

Figure 46. G7154 Precision Milling Vise.

SB1379—MT#3 Keyless Integral Chuck, ½"
SB1380—MT#3 Keyless Integral Chuck, ⅝"
These keyless chucks are produced with an integral shank to maximize concentricity between the body, shank and jaws. They start as a one-piece high-alloy body which is turned, then finish-ground throughout, making them as close to zero TIR (Total Indicated Runout) as can be. A spanner is provided to ease jaw opening.

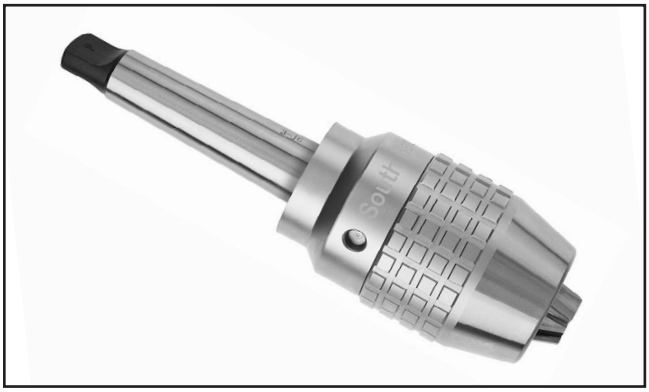

Figure 47. SB1380 ⅝" x MT#3 Keyless Integral Chuck.

H8261—MT#3 Keyless Integral Chuck, 1/32"–1/2"
These precision, Keyless Drill Chucks have integral shanks to maximize concentricity between the body, shank and jaws. Each chuck has a knurled grip for plenty of torque, and if that's not enough, they're spanner wrench compatible. (Spanner wrench not included.) Made in an ISO 9001 certified factory.

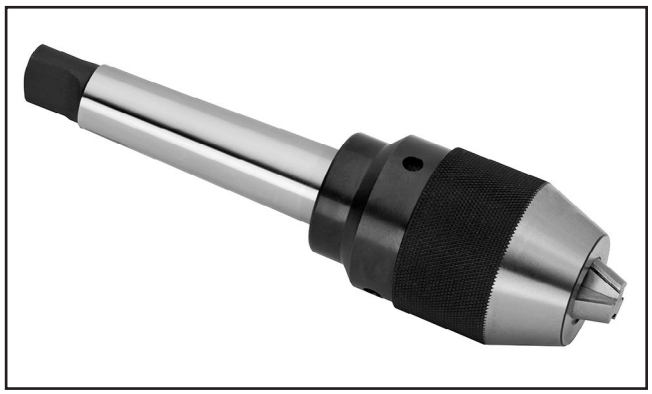

Figure 48. H8261 1/32"–1/2" x MT#3 Keyless Integral Chuck.

G1075—52-Pc. Clamping Kit
All the blocks, bolts, nuts, and hold-downs are case hardened. This clamping kit includes: 24 studs, 6 step block pairs, 6 T-nuts, 5 flange nuts, 4 coupling nuts, and 6 end hold-downs. The rack can be bolted to the wall or side of the machine for easy access. Features 1/2" T-Nuts & 3/8" bolts.

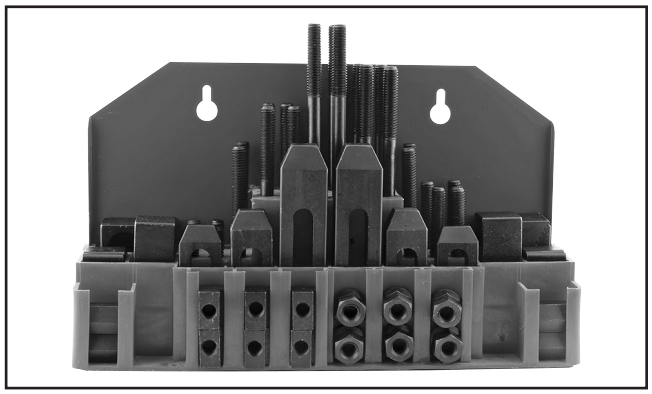

Figure 49. G1075 52-Pc. Clamping Kit.

SB1350—8-Pc. Collet Set MT#3
SB1351—16-Pc. Collet Set MT#3
Get true South Bend quality and precision with one of these Quick-Change Collet Sets. Choose the 8-piece set or the all-inclusive 16-piece set in R-8 or MT#3 shanks to fit your machine. Each set includes hardened and precision-ground spring collets for maximum holding power, collet chuck, spanner wrench and protective molded case. R-8 collet chucks are threaded for 7/16" - 20NF draw bars. MT#3 chucks are threaded for 3/8" - 16NC drawbars.



Figure 50. SB1351 16-Pc. Quick-Change Collet Set, MT#3.

G9815—Thin Parallel Set, 10 Pairs
H5556—4-Pc. Edge Finder Set
Speed setup, production, and inspection with the Grizzly Precision Angle Block Set and Thin Parallel Set made from hardened and precision-ground steel, Round Bar Center Finder, and 4-Pc. Edge Finder Set.



Figure 51. Grizzly precision angle block sets, and center and edge finders.

T24799—1-2-3 Precision Parallel Blocks
T24800—2-4-6 Precision Parallel Blocks
These blocks are extremely handy for layout and setup work. Matched blocks are hardened and precision-ground so all six sides are square to within 0.0003".

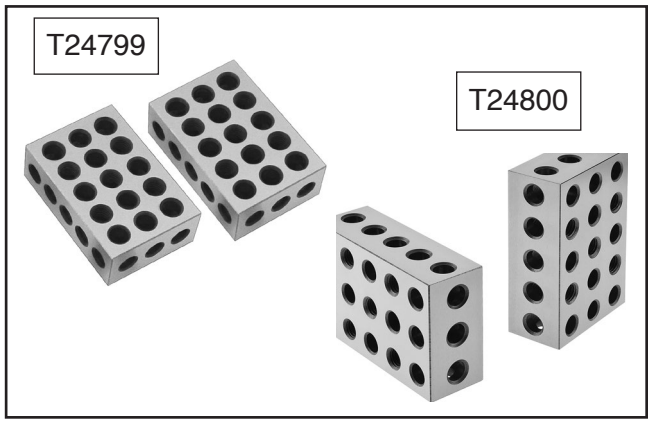

Figure 52. T24799 and T24800 Precision Parallel Blocks.

H5610—V-Block Pair w/Clamps 2"
Each V-Block pair is precision-ground and numbered to match for accuracy.



Figure 53. Grizzly V-Block Pair w/Clamps.

SB1365—South Bend Way Oil-ISO 68
T26419—Syn-O-Gen Synthetic Grease



Figure 54. Recommended products for machine lubrication.

SECTION 6: MAINTENANCE

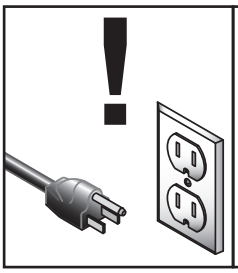

⚠WARNING

To reduce risk of shock or accidental startup, always disconnect machine from power before adjustments, maintenance, or service.

Schedule

For optimum performance from your machine, follow this maintenance schedule and refer to any specific instructions given in this section.

Ongoing

To help minimize your risk of injury and maintain proper machine operation, if you ever observe any of the items below shut the machine down immediately, disconnect it from power, and fix the problem before continuing operations.

- Loose mounting bolts or fasteners.
- Worn, frayed, cracked, or damaged wires.
- Damaged saw blade.
- Open belt guard.
- Any other unsafe condition.

Before Beginning Operations

- Press the OFF button on the front of the headstock to prevent spindle startup when machine is connected to power (see **Page 4**).
- Make sure the X-axis power feed is turned ***OFF*** to prevent unintentional table movement when machine is connected to power (see **Page 5**).
- Perform lubrication tasks as directed in the **Lubrication** section on **Page 38**.
- Check table movement in all three axis directions for loose/tight gibs. Adjust the gibs if necessary (see **Page 44**).
- Adjust table height, then tighten the Z-axis table lock (see **Page 4**).

Daily, After Operations

- Disconnect the machine from power.
- Vacuum/clean all chips and swarf from table, slides, and base.
- Wipe down all unpainted or machined surfaces with a good quality rust preventative.

Cleaning & Protecting

Regular cleaning is one of the most important steps in taking good care of this machine. Each operator is responsible for cleaning the machine immediately after using it or at the end of the day. We recommend that the cleaning routine be planned into the workflow schedule, so that adequate time is set aside to do the job right.

Typically, the easiest way to clean swarf from the ways and table is to use a wet/dry shop vacuum that is dedicated for this purpose only. The small chips leftover after vacuuming can be wiped up with a slightly oiled rag. Avoid using compressed air to blow off chips, as this may drive them deeper into moving surfaces and could cause sharp chips to fly into your face or hands.

Besides the ways and leadscrews, all other unpainted and machined surfaces should be wiped down daily to keep them rust-free and in top condition. This includes any surface that could be vulnerable to rust if left unprotected (this especially includes any parts that may be exposed to water soluble cutting fluids). Typically with these parts, a thin film of oil is all that is necessary for protection.

Keep table rust-free with ISO 68 way oil or other high-quality metal protectants.

Lubrication

This machine has numerous moving metal-to-metal contacts that require regular and proper lubrication to ensure efficient and long-lasting operation, and to protect your investment.

Other than the lubrication points covered in this section, all other bearings are internally lubricated and sealed at the factory. Simply leave them alone unless they need to be replaced.

Before performing any lubrication task, DISCONNECT MACHINE FROM POWER!

Important: *Before adding lubricant, clean any debris and grime from the immediate area to prevent contamination of the new lubricant.*

Use the schedule and information in **Figure 55** as a guide for lubrication tasks. Follow the referenced sections on the following pages for detailed instructions.

Lubrication Task	Frequency (Hours of Operation)	Page Ref.
Quill, Column, and Column Rack	8 Hrs.	**This Page**
X- and Y-Axis Leadscrews	40 Hrs.	**39**
Quill Rack and Pinion	90 Hrs.	**39**
Power Feed Gears	160 Hrs.	**40**

Figure 55. Recommended lubrication tasks, schedules, and instruction page references.

NOTICE

The following recommended lubrication schedule is based on light to medium machine usage. Keeping in mind that lubrication helps to protect value and operation of machine, you may need to perform lubrication tasks more frequently depending on your usage.

NOTICE

Failure to follow reasonable lubrication practices as instructed in this manual could lead to premature failure of the machine and will void the warranty.

Quill, Column, & Column Rack

Oil Type ..... Model SB1365 or ISO 68 Equivalent
Oil Amount.....Thin Coat
Lubrication Frequency.....8 Hrs. of Operation

Use the controls to access all surfaces (see **Figures 56–57**), then clean them with mineral spirits, shop rags, and, where appropriate, brushes.



Figure 56. Outside surface of quill.

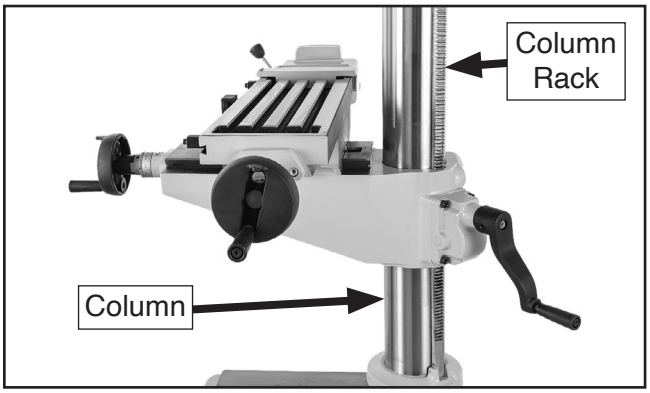

Figure 57. Location of column and rack.

When dry, apply a thin coat of oil to the surfaces. Use clean brushes to apply oil to the grooves of the column rack. Move each component through the entire path of travel several times to distribute the lubricant.

Note: *Take care not to remove the quill rack grease without re-applying it.*

X-Axis & Y-Axis Leadscrews

Grease Type ..... T26419, NLGI #2, or Equivalent
Grease Amount ..... Thin Coat
Check/Add Frequency ..... 40 Hrs. of Operation

Use mineral spirits to clean any debris and built-up grime from the leadscrews shown in **Figures 58–59**, then wipe them dry. Brush a thin coat of lubricant on the threads of the leadscrews, then rotate each leadscrew through its full path to distribute the grease.

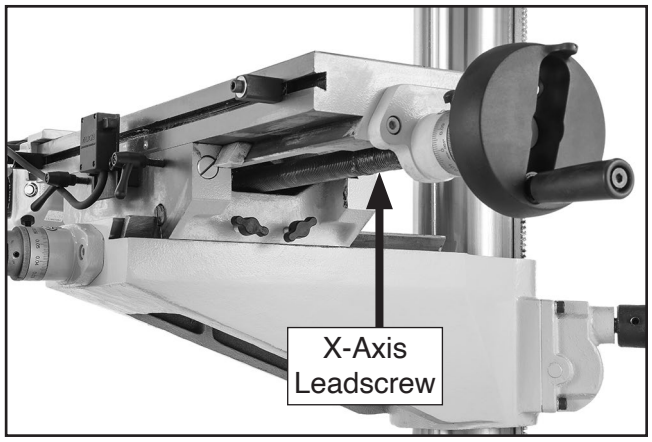

Figure 58. Location of X-axis leadscrew.

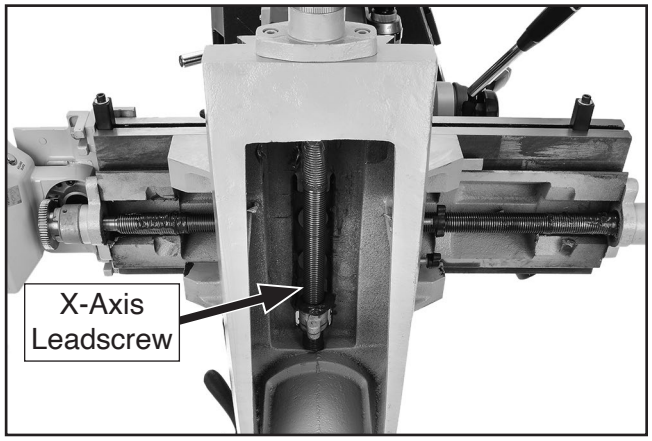

Figure 59. Y-axis leadscrew as viewed from underneath knee.

Quill Rack & Pinion

Grease Type ..... T26419, NLGI #2, or Equivalent
Oil Amount ..... Thin Coat
Lubrication Frequency ..... 90 Hrs. of Operation

Remove cover plate from bottom of headstock, then move the quill up and down to gain full access to the quill rack and pinion (see **Figure 60**). Clean the teeth with mineral spirits, shop rags, and a brush.

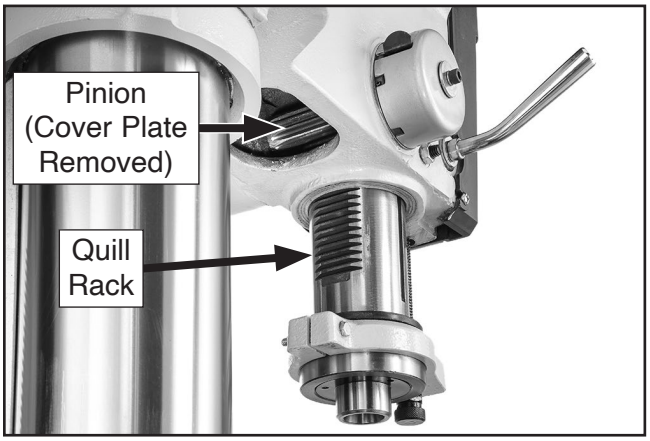

Figure 60. Location of quill rack and pinion.

When dry, use a brush to apply a thin coat of grease to the teeth, then raise/lower the quill several times to distribute the grease. Re-install cover plate when finished.

Note: *Re-apply oil to the quill smooth outside surface that was removed during the cleaning process.*

Power Feed Gears

Grease Type..... T26419, NLGI #2, or Equivalent
Grease Amount ..... Two Pumps of Grease Gun
Check/Add Frequency ..... 160 Hrs. of Operation

Materials Needed	Qty
Double-Sided Adhesive Tape	As Needed
Rubbing Alcohol and Shop Rags	As Needed

To lubricate X-axis power feed gears:

1. DISCONNECT MACHINE FROM POWER!

2. Remove gear guard (see **Figure 61**).

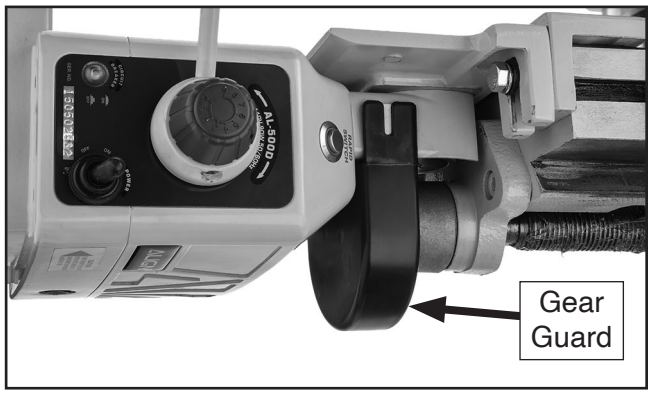

Figure 61. Location of gear guard.

3. Brush a light coat of grease on teeth of power feed gear and X-axis table gear (see **Figure 62**).

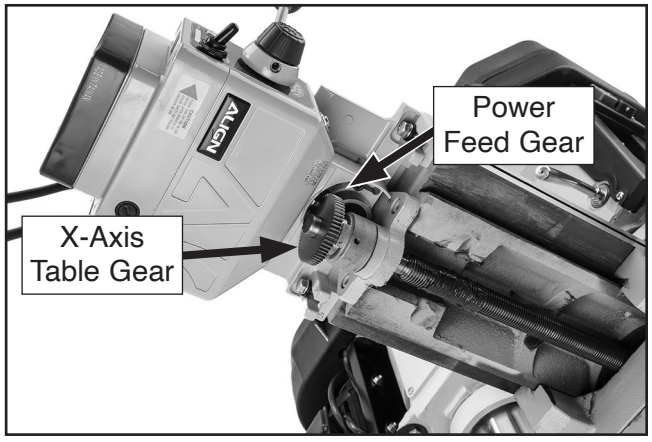

Figure 62. Lubrication points for X-axis power feed gears (as shown from below).

4. Use rubbing alcohol or other appropriate solvent/cleaner to thoroughly clean grease/residue from mating surfaces of gear guard, then re-install guard using double-sided adhesive tape.

Tensioning Return Spring

The spring tension for automatic quill recoil has been pre-set at the factory. It should not need adjustment under most normal circumstances. If it does need adjustment, the spring housing is located on the left side of the headstock.

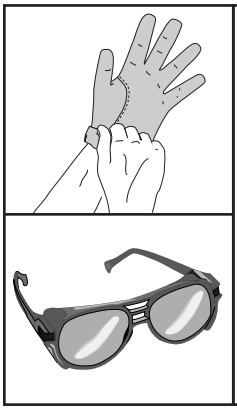

⚠WARNING

If the return spring should come loose from the spring cap and rapidly unwind, laceration or impact injuries could occur. Always wear heavy leather gloves and safety glasses when adjusting the return spring tension.

Tools Needed	Qty
Hex Wrench 5mm	1

To adjust spring tension:

1. DISCONNECT MACHINE FROM POWER!

2. PUT ON SAFETY GLASSES!

3. Loosen cap screw shown in **Figure 63** 2–3 turns (DO NOT completely remove it).

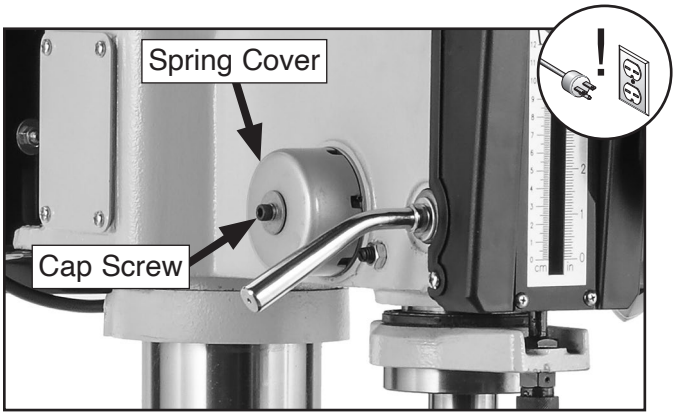

Figure 63. Spring tension components.

4. Wearing heavy leather gloves, pull spring cover out enough so notches just clear roll pin (see **Figure 64**). HOLD SPRING COVER TIGHTLY during this step or force of spring will cause cover to spin out of your hands.

5. Rotate cover counterclockwise to increase tension, then push cover back in to engage roll pin with one of the notches, as shown in **Figure 64**, then retighten cap screw.

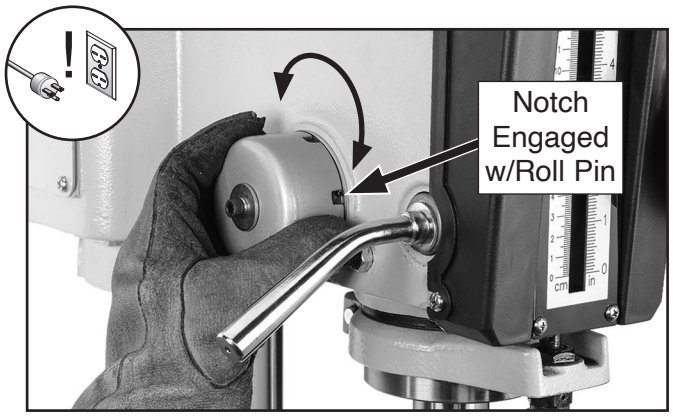

Figure 64. Adjusting spring tension by rotating spring cover to engage next notch with roll pin.

Calibrating Depth Stop Pointer

The depth stop pointer (see **Figure 64**) can be calibrated to improve accuracy.

Note: *When properly calibrated, the depth stop scale and pointer indicate depth of vertical spindle travel, which is not necessarily equal to drilling/milling depth. Be sure to compensate for variables, such as clearance between workpiece and tool when setting the depth stop.*

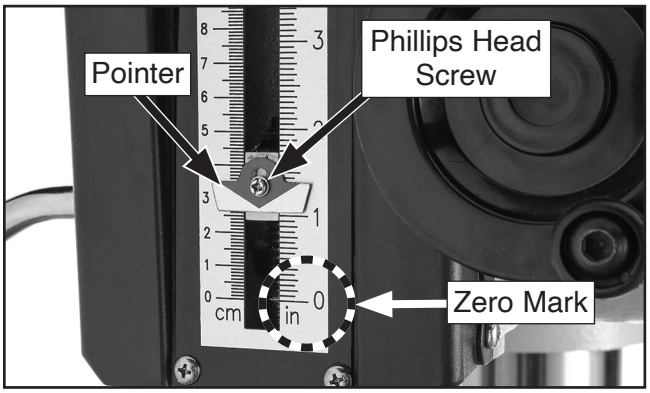

Figure 65. Depth stop pointer calibration components.

Tools Needed	**Qty**
Phillips Head Screwdriver #2	1

To check/calibrate depth stop:

1. Lower spindle all the way, then tighten quill lock lever to secure it in place. Top of pointer should be at zero mark on scale (see **Figure 65**).

— If top of pointer *is* at zero mark, pointer is properly calibrated and no adjustments are necessary.

— If top of pointer is *not* at zero mark, pointer should be calibrated. Proceed to **Step 2**.

2. Loosen Phillips head screw shown in **Figure 65**, and position pointer so its upper edge aligns with zero, then re-tighten screw.

SECTION 7: SERVICE

Review the troubleshooting procedures in this section if a problem develops with your machine. If you need replacement parts or additional help with a procedure, call our Technical Support. **Note:** *Please gather the serial number and manufacture date of your machine before calling.*

Troubleshooting



Motor & Electrical

Symptom	Possible Cause	Possible Solution
Machine does not start or quickly shuts down after startup.	1. Motor circuit breaker tripped. 2. Power supply circuit breaker tripped or fuse blown. 3. Incorrect power supply voltage or circuit size. 4. Motor or motor bearings at fault.	1. Reset circuit breaker on motor junction box. 2. Ensure circuit is sized correctly and free of shorts. Reset circuit breaker or replace fuse. 3. Ensure correct power supply voltage and circuit size. 4. Test/repair/replace motor.
Machine stalls or is underpowered.	1. Motor overheated. 2. Motor wires connected incorrectly. 3. Motor or motor bearings at fault.	1. Clean motor, let cool, and reduce workload. 2. Correct motor wiring connections **(Page 47**). 3. Replace motor.
Machine has vibration or noisy operation.	1. Motor or component loose. 2. Motor mount loose/broken. 3. Motor fan rubbing on fan cover. 4. Centrifugal switch needs adjustment. 5. Motor shaft bent. 6. Motor bearings at fault.	1. Replace damaged or missing bolts/nuts or tighten if loose. 2. Tighten/replace. 3. Fix/replace fan cover; replace loose/damaged fan. 4. Adjust switch. 5. Test with dial indicator and replace motor. 6. Test by rotating shaft; rotational grinding/loose shaft requires bearing replacement.

Operation

Symptom	Possible Cause	Possible Solution
Tool falls out or is loose in spindle.	1. Tool is not fully drawn up into spindle taper. 2. Debris on tool or in spindle taper. 3. Taking too big of a cut.	1. Tighten drawbar (**Page 32**). 2. Clean tool and spindle taper, then re-install. 3. Decrease feed pressure and allow chips to clear.
Breaking tools or cutters.	1. Spindle speed/feed rate is too fast. 2. Taking too big of a cut. 3. Improper cutting technique or type of cut for tool/machine. 4. Cutting tool is too small. 5. Cutting tool getting too hot. 6. Spindle extended too far down during or at beginning of operation.	1. Reduce spindle speed (**Page 27**); reduce feed rate. 2. Decrease depth of cut and allow chips to clear. 3. Use the right technique, tool, or machine for the job. 4. Use larger cutting tool and slower feed rate. 5. Use coolant or oil for appropriate application; reduce cutting speed. 6. Fully retract spindle and raise table to increase rigidity.

Operation (Cont.)

Symptom	Possible Cause	Possible Solution
Workpiece or tool vibrates or chatters during operation.	1. Spindle extended too far down during or at beginning of operation. 2. Table locks not tight. 3. Workpiece not secure. 4. Spindle speed/feed rate is too fast. 5. Quill lock lever not tight. 6. Gibs too loose in table.	1. Fully retract spindle and raise table to increase rigidity. 2. Tighten table locks (**Page 25**). 3. Properly clamp workpiece on table or in vise. 4. Reduce spindle speed (**Page 27**); reduce feed rate. 5. Tighten quill lock lever (**Page 4**). 6. Tighten gibs (**Page 44**).
Table is hard to move.	1. Table locks tightened down. 2. Chips loaded up on ways. 3. Ways dry and need lubrication. 4. Table limit stops interfering. 5. Gibs too tight.	1. Make sure table locks are fully released (**Page 25**). 2. Clean away chips that load up during operations. 3. Lubricate ways. 4. Adjust table limit stops out of the way. 5. Adjust gibs (**Page 44**).
Bad surface finish.	1. Spindle speed/feed rate too fast. 2. Dull or incorrect cutting tool/bit. 3. Workpiece not secure. 4. Spindle extended too far down during or at beginning of operation.	1. Reduce spindle speed (**Page 27**); reduce feed rate. 2. Sharpen cutting tool or select one that better suits the operation. 3. Properly clamp workpiece on table or in vise. 4. Fully retract spindle and raise table to increase rigidity.
Cutting/drilling results not square.	1. Table travel is inconsistent.	1. Adjust gibs (**Page 44**).
Spindle overheats.	1. Machine operated at high speeds for extended period.	1. Allow machine to cool.
Spindle does not fully retract.	1. Poorly adjusted return spring. 2. Debris on spindle/quill rack. 3. Worn return spring.	1. Increase return spring tension (**Page 40**). 2. Clean and lubricate spindle/quill rack (**Page 39**). 3. Replace return spring.

Power Feed

Symptom	Possible Cause	Possible Solution
Power feed does not move table or is slipping.	1. Table locked. 2. Direction lever not engaged. 3. Gears not meshing or teeth missing. 4. Motor shaft and gear shaft not engaged.	1. Disengage table locks (**Page 25**). 2. Engage direction lever (**Page 26**). 3. Check gears and adjust/replace. 4. Replace clutch.
Operates at high speed only or is inconsistent.	1. Rapid traverse button at fault. 2. Wiring harness unplugged from circuit board.	1. Inspect/replace rapid traverse button. 2. Reconnect wiring harness.

Adjusting Gibs

Gibs are tapered lengths of metal that are sandwiched between two moving surfaces. Gibs control the gap between these surfaces and how they slide past one another. Correctly adjusting the gibs is critical to producing good milling results.

Tight gibs make table movement more accurate but stiff. Loose gibs make moving the table sloppy but easier to do. The goal of gib adjustment is to remove unnecessary sloppiness without causing the ways to bind.

Gibs are adjusted with gib screws (see **Figure 66**–**Figure 67**) that move the tapered gib back-and-forth to increase or decrease the friction pressure between the sliding surfaces. The process of properly adjusting the gibs requires trial-and-error and patience.

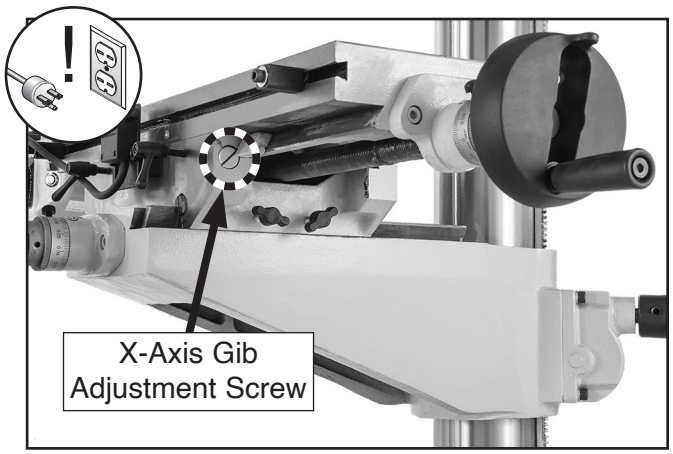

Figure 66. Location of X-axis gib adjustment screw and Y-axis table locks.

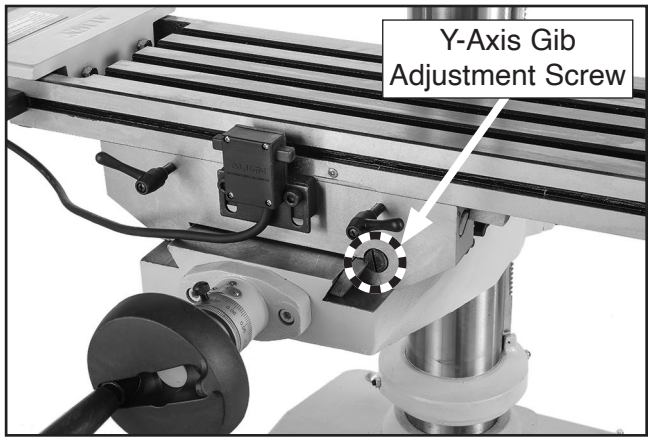

Figure 67. Location of Y-axis gib adjustment screw.

Refer to the figures on this page to identify the locations of the gibs and gib adjustment screws.

Note: *It will be necessary to remove small parts, such as way wipers and covers, to access the gib adjustment screws.*

Tools Needed	**Qty**
Flat Head Screwdriver #2	1

To adjust each gib:

1. DISCONNECT MACHINE FROM POWER!
2. Loosen locks for component you are adjusting.
3. Loosen one gib adjustment screw, then tighten the other the same amount to move the gib.
4. Use handwheel/crank (if applicable) to move component until you feel a slight drag in path of movement. Repeat **Steps 3–4** as necessary.

Adjusting Leadscrew Backlash

Leadscrew backlash is the amount of motion or "play" in leadscrew rotation before the attached device begins to move. Leadscrews will always have a certain amount of backlash that will increase with normal wear.

Generally, 0.005"–0.010" leadscrew backlash is acceptable to ensure smooth movement and reduce the risk of premature thread wear. However, if you find it necessary to adjust leadscrew backlash, perform the procedures listed below.

Tools Needed	**Qty**
Long-Handle Hex Wrench 4mm	1
Hex Wrench 4mm	1

To adjust leadscrew backlash:

Tighten or loosen the cap screws on the leadscrew nuts shown in **Figures 68–69**, then test the amount of backlash by slowly rocking the handwheels back-and-forth. Repeat if necessary.

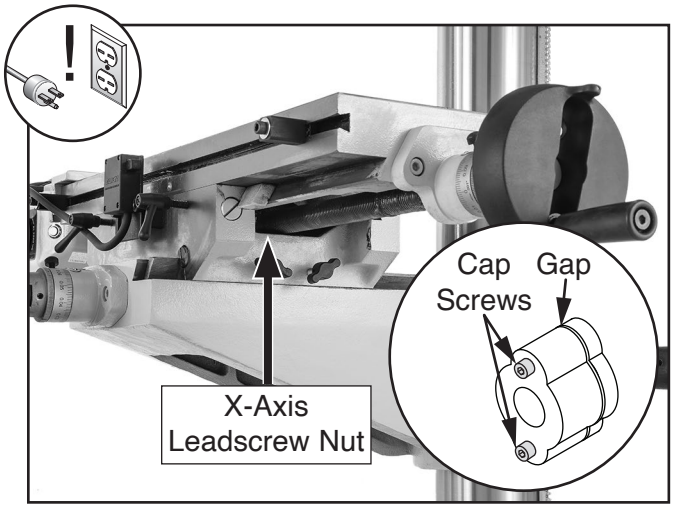

Figure 68. X-axis leadscrew nut located under right side of table.

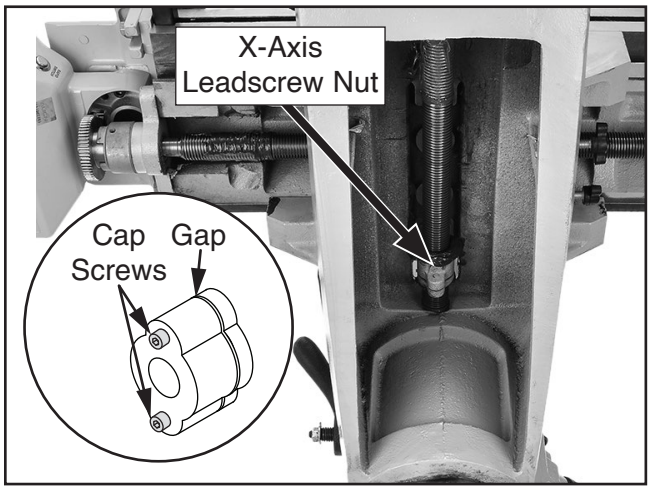

Figure 69. Y-axis leadscrew nut located inside knee.

SECTION 8: WIRING

These pages are current at the time of printing. However, in the spirit of improvement, we may make changes to the electrical systems of future machines. Compare the manufacture date of your machine to the one stated in this manual, and study this section carefully.

If there are differences between your machine and what is shown in this section, call Technical Support at (570) 546-9663 for assistance BEFORE making any changes to the wiring on your machine. An updated wiring diagram may be available. **Note:** *Please gather the serial number and manufacture date of your machine before calling. This information can be found on the main machine label.*

⚠WARNING
Wiring Safety Instructions

SHOCK HAZARD. Working on wiring that is connected to a power source is extremely dangerous. Touching electrified parts will result in personal injury including but not limited to severe burns, electrocution, or death. Disconnect the power from the machine before servicing electrical components!

MODIFICATIONS. Modifying the wiring beyond what is shown in the diagram may lead to unpredictable results, including serious injury or fire. This includes the installation of unapproved aftermarket parts.

WIRE CONNECTIONS. All connections must be tight to prevent wires from loosening during machine operation. Double-check all wires disconnected or connected during any wiring task to ensure tight connections.

CIRCUIT REQUIREMENTS. You MUST follow the requirements at the beginning of this manual when connecting your machine to a power source.

WIRE/COMPONENT DAMAGE. Damaged wires or components increase the risk of serious personal injury, fire, or machine damage. If you notice that any wires or components are damaged while performing a wiring task, replace those wires or components.

MOTOR WIRING. The motor wiring shown in these diagrams is current at the time of printing but may not match your machine. If you find this to be the case, use the wiring diagram inside the motor junction box.

CAPACITORS/INVERTERS. Some capacitors and power inverters store an electrical charge for up to 10 minutes after being disconnected from the power source. To reduce the risk of being shocked, wait at least this long before working on capacitors.

EXPERIENCING DIFFICULTIES. If you are experiencing difficulties understanding the information included in this section, contact our Technical Support at (570) 546-9663.

NOTICE

The photos and diagrams included in this section are best viewed in color. You can view these pages in color at www.grizzly.com.

COLOR KEY

BLACK	Bk	BLUE	Bl	YELLOW	Yl	LIGHT BLUE	Lb
WHITE	Wt	BROWN	Br	YELLOW GREEN	Yg	BLUE WHITE	Bw
GREEN	Gn	GRAY	Gy	PURPLE	Pu	TURQUOISE	Tu
RED	Rd	ORANGE	Or	PINK	Pk		

Electrical Components



Figure 70. Electrical component wiring overview.



Figure 71. X-axis power feed unit.



Figure 72. Motor junction box wiring.

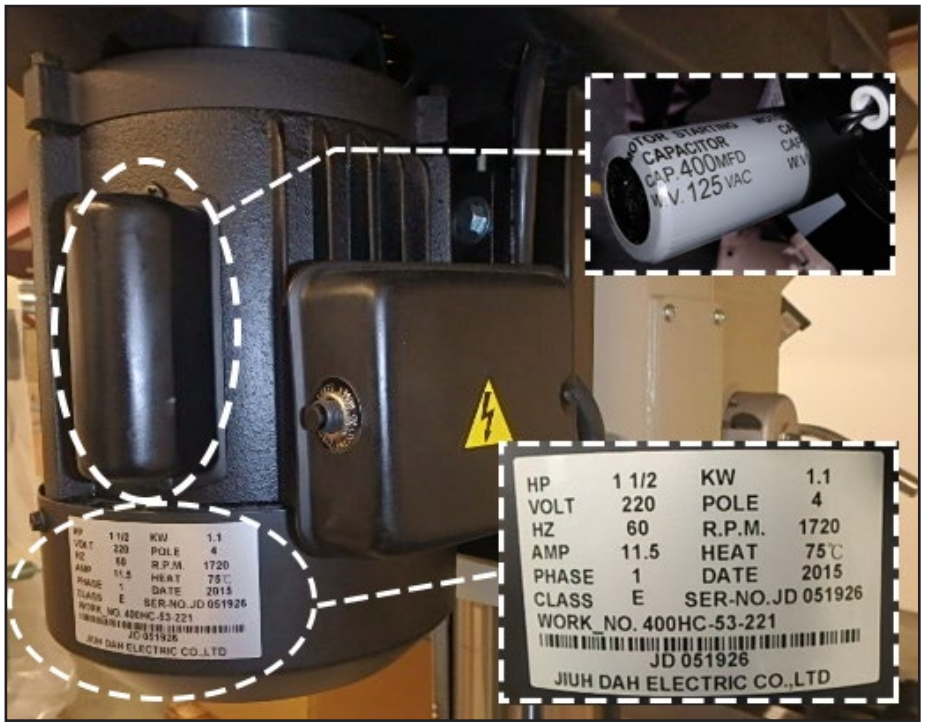

Figure 73. Motor junction box, start capacitor and ID plate.

STOP *READ ELECTRICAL SAFETY ON PAGE 46!*

Wiring Diagram

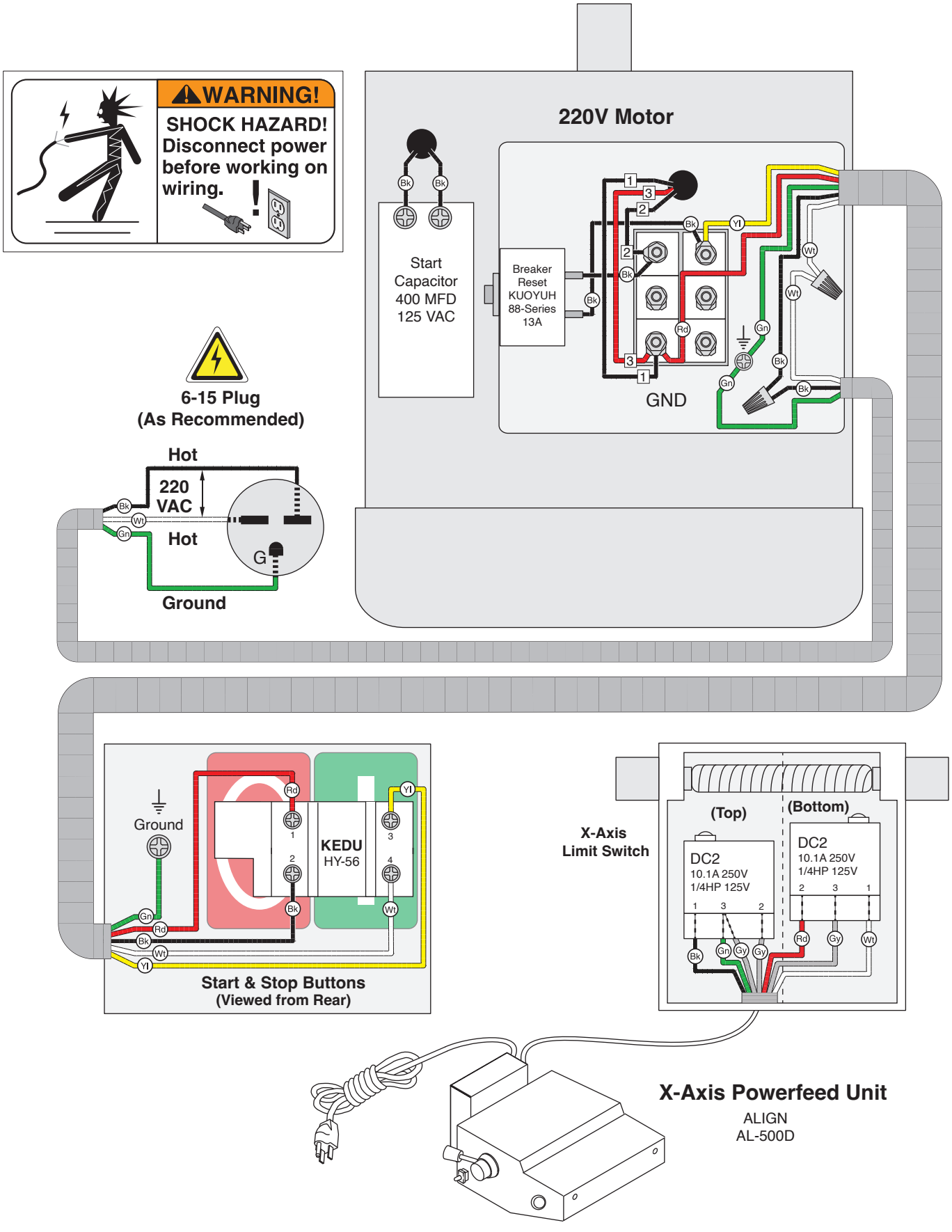

STOP

READ WIRING SAFETY ON PAGE 46!

SECTION 9: PARTS

We do our best to stock replacement parts when possible, but we cannot guarantee that all parts shown are available for purchase. Call **(800) 523-4777** or visit **www.grizzly.com/parts** to check for availability.

Headstock

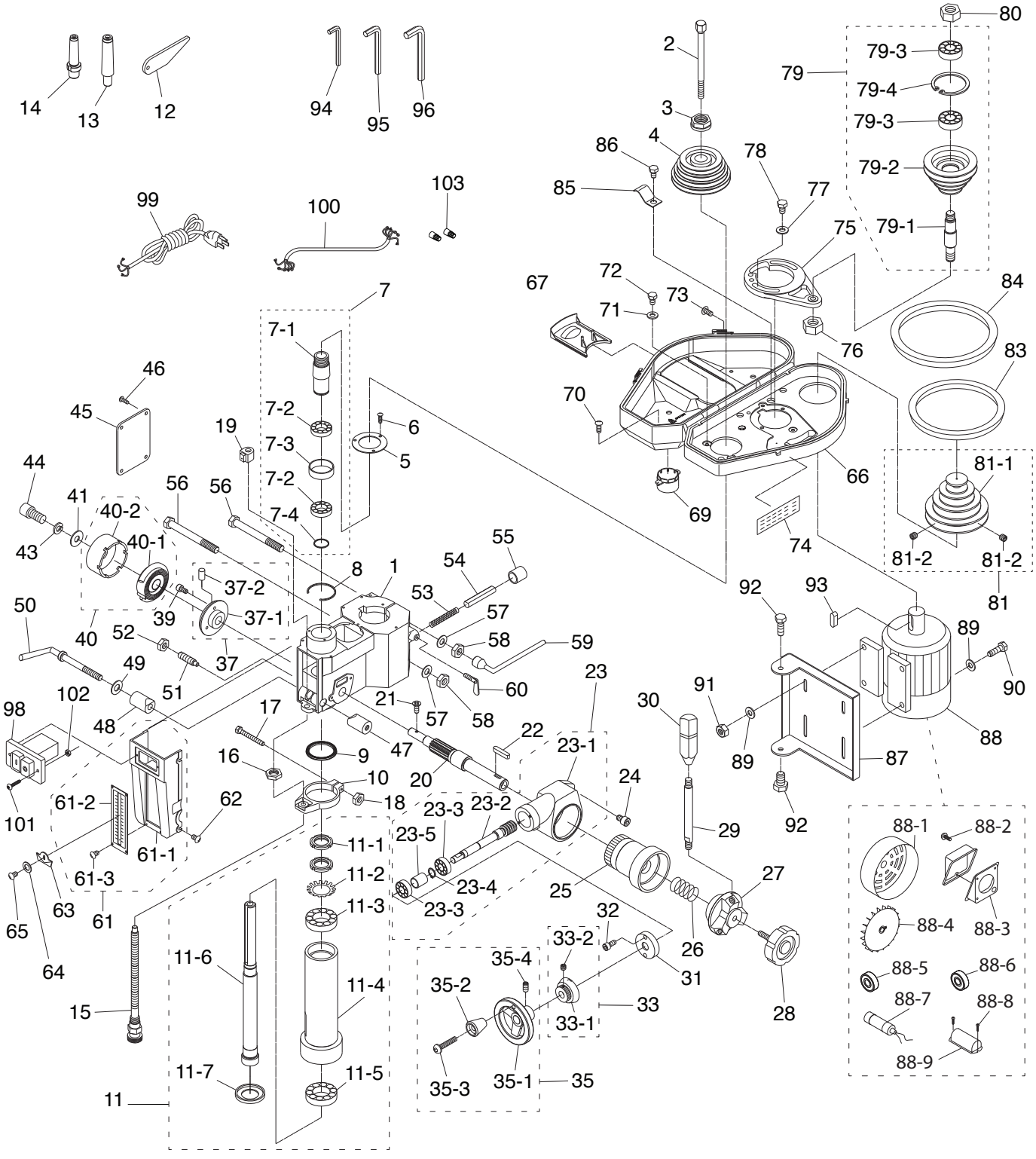

Headstock Parts List

REF	PART #	DESCRIPTION
1	P0810001	HEADSTOCK CASTING
2	P0810002	DRAWBAR 3/8-16 X 16-5/16
3	P0810003	SPINDLE LOCK NUT 1-5/8-16 (LH)
4	P0810004	SPINDLE PULLEY
5	P0810005	BEARING COVER 66 X 105 X 2.5
6	P0810006	PHLP HD SCR 1/4-20 X 1/2
7	P0810007	SPINDLE SLEEVE ASSEMBLY
7-1	P0810007-1	SPINDLE SLEEVE
7-2	P0810007-2	BALL BEARING 6009ZZ
7-3	P0810007-3	BUSHING 68 X 74 X 22
7-4	P0810007-4	O-RING 2 X 41
8	P0810008	INT RETAINING RING 80MM
9	P0810009	RUBBER FLANGE
10	P0810010	DEPTH ROD MOUNT
11	P0810011	SPINDLE ASSEMBLY MT#3
11-1	P0810011-1	SPANNER NUT M30-2 (LH)
11-2	P0810011-2	TABBED WASHER 30MM
11-3	P0810011-3	TAPERED ROLLER BEARING 30206
11-4	P0810011-4	QUILL MT#3
11-5	P0810011-5	TAPERED ROLLER BEARING 30207
11-6	P0810011-6	SPINDLE MT#3
11-7	P0810011-7	BEARING COVER
12	P0810012	DRIFT KEY
13	P0810013	DRILL CHUCK ARBOR MT3 X JT6, 3/8-16
14	P0810014	CUTTER ARBOR 1" D MT#3, 3/8-16
15	P0810015	QUILL DEPTH LEADSCREW ASSY 1/2-10 X 9
16	P0810016	QUILL DEPTH SUPPORT NUT M16-1.5
17	P0810017	HEX BOLT 1/4-20 X 2
18	P0810018	HEX NUT 1/4-20
19	P0810019	QUILL DEPTH STOP BLOCK
20	P0810020	PINION SHAFT
21	P0810021	FLAT HD SCR 10-24 X 1/2
22	P0810022	KEY 7 X 7 X 20
23	P0810023	WORM SHAFT ASSEMBLY
23-1	P0810023-1	WORM SHAFT HOUSING
23-2	P0810023-2	WORM SHAFT
23-3	P0810023-3	BALL BEARING 6202ZZ
23-4	P0810023-4	EXT RETAINING RING 15MM
23-5	P0810023-5	BEARING SPACER 27.5 X 34 X 30
24	P0810024	CAP SCREW 5/16-18 X 3/4
25	P0810025	WORM GEAR
26	P0810026	COMPRESSION SPRING 2.4 X 18 X 25
27	P0810027	COARSE DOWNFEED LEVER HUB
28	P0810028	KNOB BOLT 3/8-16 X 1-5/8, 3" OD, 6-LOBE
29	P0810029	LEVER SHAFT-DE 1/2-12 X 6-3/4, 3/4
30	P0810030	LEVER HANDLE 1/2-12, 1-1/4 X 4-3/8
31	P0810031	WORM SHAFT END BRACKET
32	P0810032	PHLP HD SCR 10-24 X 3/8
33	P0810033	FINE DOWNFEED DIAL ASSEMBLY
33-1	P0810033-1	FINE DOWNFEED GRADUATED DIAL
33-2	P0810033-2	SET SCREW 1/4-20 X 5/16
35	P0810035	FINE DOWNFEED HANDWHEEL ASSEMBLY
35-1	P0810035-1	HANDWHEEL TYPE-24 4"D X 1/2"B X 5/16-18
35-2	P0810035-2	KNOB 5/16, 1 X 1 (PLASTIC)
35-3	P0810035-3	SHOULDER SCREW 5/16-18 X 3/8, 3/8 X 7/8
35-4	P0810035-4	SET SCREW 5/16-18 X 5/16
37	P0810037	SPRING BASE ASSEMBLY

REF	PART #	DESCRIPTION
37-1	P0810037-1	SPRING BASE
37-2	P0810037-2	DOWEL PIN 3 X 12
39	P0810039	PHLP HD SCR 10-24 X 3/4
40	P0810040	RETURN SPRING ASSEMBLY
40-1	P0810040-1	FLAT COILED SPRING
40-2	P0810040-2	RETURN SPRING COVER
41	P0810041	FENDER WASHER 1/4
43	P0810043	LOCK WASHER 1/4
44	P0810044	CAP SCREW 1/4-20 X 5/8
45	P0810045	HEADSTOCK COVER PLATE
46	P0810046	PHLP HD SCR 1/4-20 X 3/8
47	P0810047	LOCK PLUNGER (RIGHT)
48	P0810048	LOCK PLUNGER (LEFT)
49	P0810049	FLAT WASHER 1/2
50	P0810050	HANDLE ROD 1/2-12 X 9-1/4
51	P0810051	ALIGNMENT PIN 3/8-16 X 38
52	P0810052	HEX NUT 3/8-16
53	P0810053	COMPRESSION SPRING 1.4 X 13.2 X 83
54	P0810054	BELT TENSION BAR
55	P0810055	RUBBER BUMPER
56	P0810056	HEX BOLT 5/8-11 X 6
57	P0810057	DOCK WASHER 5/8 X 1-9/16 X 1/8
58	P0810058	HEX NUT 5/8-11
59	P0810059	L-WRENCH 1"
60	P0810060	THUMB SCREW 3/8-16, FOLDING-TYPE
61	P0810061	FRONT COVER ASSEMBLY
61-1	P0810061-1	FRONT COVER PLATE
61-2	P0810061-2	DEPTH SCALE
61-3	P0810061-3	TAP SCREW M4 X 8
62	P0810062	PHLP HD SCR 1/4-20 X 1/2
63	P0810063	DEPTH INDICATOR
64	P0810064	FLAT WASHER #5
65	P0810065	PHLP HD SCR 5-40 X 1/4
66	P0810066	BELT COVER
67	P0810067	BELT COVER HATCH
69	P0810069	SPINDLE COVER
70	P0810070	TAP SCREW M4 X 12
71	P0810071	FENDER WASHER 5/16
72	P0810072	HEX BOLT 5/16-18 X 3/4
73	P0810073	PHLP HD SCR 1/4-20 X 1/2
74	P0810074	SPINDLE SPEED CHART
75	P0810075	IDLER PIVOT ARM
76	P0810076	HEX NUT 5/8-11
77	P0810077	FENDER WASHER 5/16
78	P0810078	HEX BOLT 5/16-18 X 1-1/2
79	P0810079	IDLER PULLEY ASSEMBLY
79-1	P0810079-1	IDLER PULLEY SHAFT 8 X 107MM
79-2	P0810079-2	IDLER PULLEY
79-3	P0810079-3	BALL BEARING 6204ZZ
79-4	P0810079-4	INT RETAINING RING 52MM
80	P0810080	HEX NUT 5/8-11
81	P0810081	MOTOR PULLEY ASSEMBLY
81-1	P0810081-1	MOTOR PULLEY
81-2	P0810081-2	SET SCREW 5/16-18 X 5/16
83	P0810083	V-BELT B33
84	P0810084	V-BELT B42
85	P0810085	WIRE RETENTION CLIP

Headstock Parts List (Continued)

REF	PART #	DESCRIPTION
86	P0810086	HEX BOLT 5/16-18 X 3/4
87	P0810087	MOTOR MOUNT PLATE
88	P0810088	MOTOR 1-1/2 HP 220V/440V 3-PH
88-1	P0810088-1	MOTOR FAN COVER
88-2	P0810088-2	PHLP HD SCR 10-24 X 3/8
88-3	P0810088-3	MOTOR JUNCTION BOX
88-4	P0810088-4	MOTOR FAN
88-5	P0810088-5	BALL BEARING 6205ZZ (FRONT)
88-6	P0810088-6	BALL BEARING 6203ZZ (REAR)
88-7	P0810088-7	S CAPACITOR 150M 250V 1-3/8 X 2-3/4
88-8	P0810088-8	PHLP HD SCR M5-.8 X 6
88-9	P0810088-9	CAPACITOR COVER
89	P0810089	FENDER WASHER 5/16
90	P0810090	HEX BOLT 5/16-18 X 1

REF	PART #	DESCRIPTION
91	P0810091	HEX NUT 5/16-18
92	P0810092	HEX BOLT 7/16-14 X 3/4
93	P0810093	KEY 7 X 7 X 40
94	P0810094	HEX WRENCH 3MM
95	P0810095	HEX WRENCH 4MM
96	P0810096	HEX WRENCH 5MM
97	P0810097	DRILL CHUCK JT6 1/2"
98	P0810098	ON/OFF SWITCH KEDU HY56 250V 20A
99	P0810099	POWER CORD 14G 3W 72" 6-15P
100	P0810100	MOTOR CORD 14G 5W 30"
101	P0810101	PHLP HD SCR M4-.7 X 25
102	P0810102	HEX NUT M4-.7
103	P0810103	WIRE NUT 14G

Column

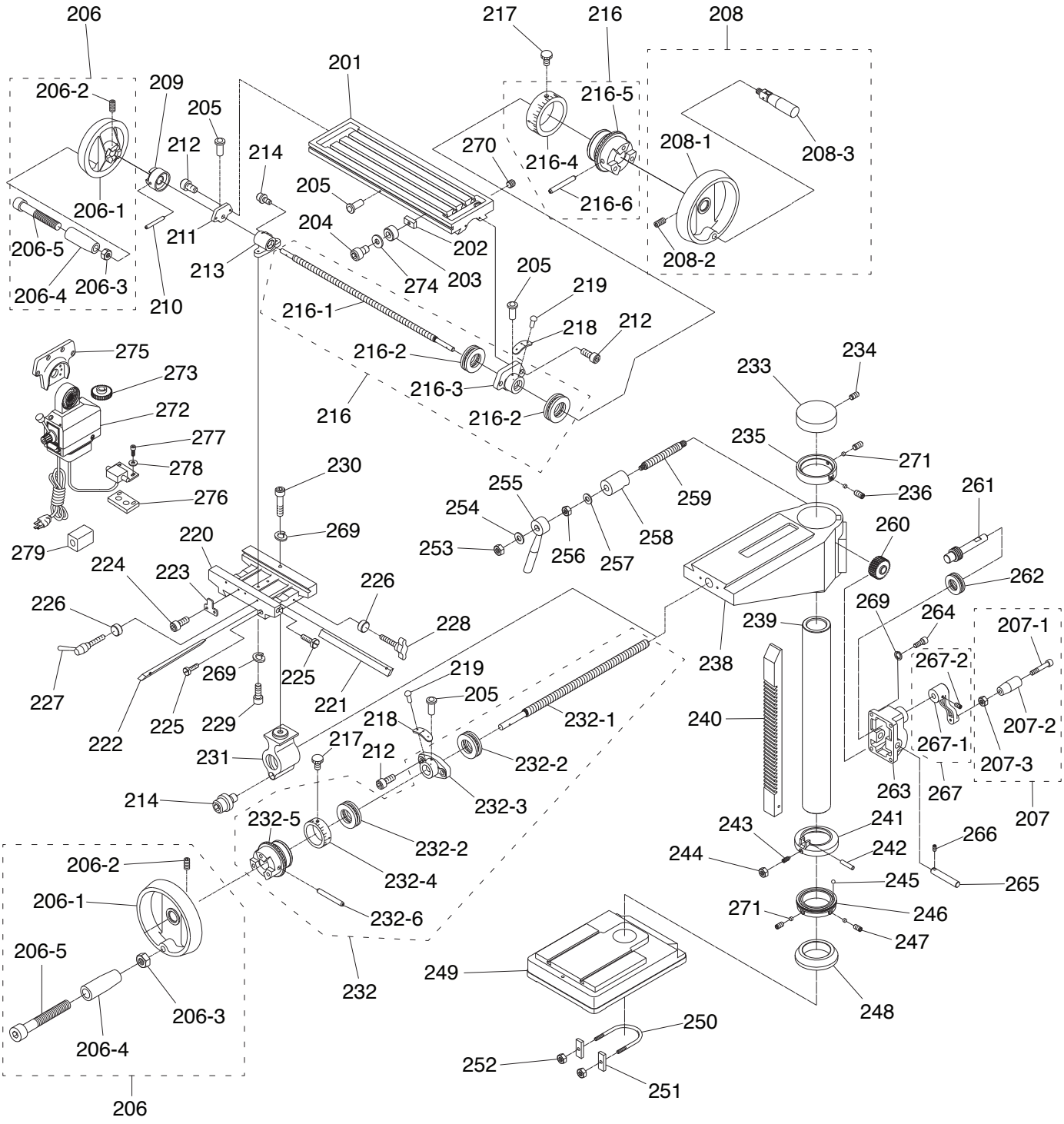
206
217
216
208
201
206-2
209
205
216-5
212
214
270
216-4
208-1
208-3
205
216-6
206-1
204
211
202
206-5
213
274
203
208-2
206-4
206-3
210
205
219
216-1
218
212
275
216-2
234
233
273
216-3
272
216
216-2
277
235
271
278
230
255
259
236
261
276
254
258
260
269
253
256
257
279
220
224
223
226
262
226
228
239
269
264
207-1
238
267-2
227
269
225
219
205
221
222
225
229
218
232-1
240
207-2
217
212
267-1
231
232-2
207-3
214
232-3
263
267
207
232-5
243
241
232-2
266
206-2
244
242
232-4
245
265
206-1
271
246
232-6
247
206-5
249
232
248
206-3
250
206-4
252
251
206

Column Parts List

REF	PART #	DESCRIPTION
201	P0810201	TABLE
202	P0810202	SLIDE NUT 1/4-20
203	P0810203	LIMIT STOP
204	P0810204	CAP SCREW 1/4-20 X 1-1/2
205	P0810205	BALL OILER 1/4 PRESS-IN
206	P0810206	Y-AXIS HANDWHEEL ASSEMBLY
206-1	P0810206-1	HANDWHEEL TYPE-25 120D X 17 B-S
206-2	P0810206-2	SET SCREW M6-1 X 8
206-3	P0810206-3	HEX NUT 3/8-16
206-4	P0810206-4	HANDLE 3/8, 1 X 2-3/4 (PLASTIC)
206-5	P0810206-5	HANDLE SCREW 3/8-16 X 3-1/2
207	P0810207	Z-AXIS CRANK HANDLE ASSEMBLY
207-1	P0810207-1	HANDLE SCREW 3/8-16 X 3-1/2
207-2	P0810207-2	HANDLE 3/8, 1 X 2-3/4 (PLASTIC)
207-3	P0810207-3	HEX NUT 3/8-16
208	P0810208	X-AXIS HANDWHEEL ASSEMBLY
208-1	P0810208-1	HANDWHEEL TYPE-25 120D X 17 B-S
208-2	P0810208-2	SET SCREW 1/4-20 X 3/8
208-3	P0810208-3	FOLDING HANDLE M10-1.5 X 12, 23 X 90
209	P0810209	X-AXIS LEADSCREW CLUTCH (LEFT)
210	P0810210	ROLL PIN 5 X 40
211	P0810211	X-AXIS LEADSCREW BRACKET (LEFT)
212	P0810212	CAP SCREW 5/16-18 X 1
213	P0810213	X-AXIS LEADSCREW NUT 1-10
214	P0810214	CAP SCREW M5-.8 X 16
216	P0810216	X-AXIS LEADSCREW ASSEMBLY
216-1	P0810216-1	X-AXIS LEADSCREW 1-10
216-2	P0810216-2	THRUST BEARING 51103
216-3	P0810216-3	X-AXIS LEADSCREW BRACKET (RIGHT)
216-4	P0810216-4	X-AXIS GRADUATED COLLAR (0.001")
216-5	P0810216-5	X-AXIS LEADSCREW CLUTCH (RIGHT)
216-6	P0810216-6	ROLL PIN 5 X 38
217	P0810217	KNURLED THUMB SCREW 1/4-20 X 1/2
218	P0810218	DIAL INDICATOR
219	P0810219	RIVET 2 X 4MM
220	P0810220	TABLE BASE
221	P0810221	GIB (X-AXIS)
222	P0810222	GIB (Y-AXIS)
223	P0810223	LIMIT STOP BRACKET
224	P0810224	CAP SCREW 5/16-18 X 3/4
225	P0810225	GIB BOLT 5/16-18 X 1-1/8
226	P0810226	BUSHING
227	P0810227	ADJUSTABLE HANDLE 1-3/4, 5/16-18 X 1-1/2
228	P0810228	T-KNOB BOLT 5/16-18 X 1-3/4
229	P0810229	CAP SCREW 5/16-18 X 1
230	P0810230	CAP SCREW 5/16-18 X 2-1/2
231	P0810231	Y-AXIS LEADSCREW NUT 1-10
232	P0810232	Y-AXIS LEADSCREW ASSEMBLY
232-1	P0810232-1	Y-AXIS LEADSCREW INCH 1-10
232-2	P0810232-2	THRUST BEARING 51103
232-3	P0810232-3	Y-AXIS LEADSCREW BRACKET
232-4	P0810232-4	Y-AXIS GRADUATED COLLAR (0.001")
232-5	P0810232-5	Y-AXIS LEADSCREW CLUTCH
232-6	P0810232-6	ROLL PIN 5 X 38
233	P0810233	COLUMN CAP
234	P0810234	SET SCREW 5/16-18 X 5/16
235	P0810235	COLUMN COLLAR (UPPER)
236	P0810236	SET SCREW 1/2-13 X 5/8
238	P0810238	KNEE
239	P0810239	COLUMN
240	P0810240	COLUMN RACK
241	P0810241	RACK RING
242	P0810242	ROLL PIN 5 X 38
243	P0810243	SET SCREW 5/16-18 X 7/8 DOG-PT
244	P0810244	HEX NUT 5/16-18
245	P0810245	STEEL BALL 10MM
246	P0810246	RACK RING BASE
247	P0810247	SET SCREW 1/2-12 X 5/8
248	P0810248	COLUMN COLLAR (LOWER)
249	P0810249	COLUMN BASE
250	P0810250	U-BOLT 1/2-13, 116 ID
251	P0810251	U-BOLT RETAINER BLOCK
252	P0810252	HEX NUT 1/2-13
253	P0810253	HEX NUT 3/8-16
254	P0810254	FLAT WASHER 3/8
255	P0810255	Z-AXIS LOCK HANDLE 5/8 X 4-1/2
256	P0810256	HEX NUT 5/8-11
257	P0810257	FLAT WASHER 5/8
258	P0810258	LOCK PLUNGER (Z-AXIS)
259	P0810259	LOCK BOLT 5/8-11 X 5, 3/8-16 X 1/2
260	P0810260	WORM GEAR 33T
261	P0810261	WORM SHAFT
262	P0810262	THRUST BEARING 51103
263	P0810263	Z-AXIS CRANK BRACKET
264	P0810264	CAP SCREW 5/16-18 X 1
265	P0810265	WORM GEAR SHAFT
266	P0810266	SET SCREW 1/4-20 X 3/8
267	P0810267	Z-AXIS CRANK ARM ASSEMBLY
267-1	P0810267-1	Z-AXIS CRANK ARM
267-2	P0810267-2	SET SCREW 3/8-16 X 1/2
269	P0810269	LOCK WASHER 5/16
270	P0810270	DRAIN PLUG 1/4 NPT
271	P0810271	BUSHING (BRASS)
272	P0810272	POWER FEED UNIT ALIGN AL500D
273	P0810273	X-AXIS LEADSCREW GEAR 56T
274	P0810274	FLAT WASHER 1/4
275	P0810275	POWER FEED BRACKET ASSEMBLY
276	P0810276	LIMIT SWITCH MOUNTING BLOCK
277	P0810277	CAP SCREW M8-1.25 X 12
278	P0810278	FLAT WASHER 8MM
279	P0810279	POWER FEED LIMIT STOP

Labels & Cosmetics

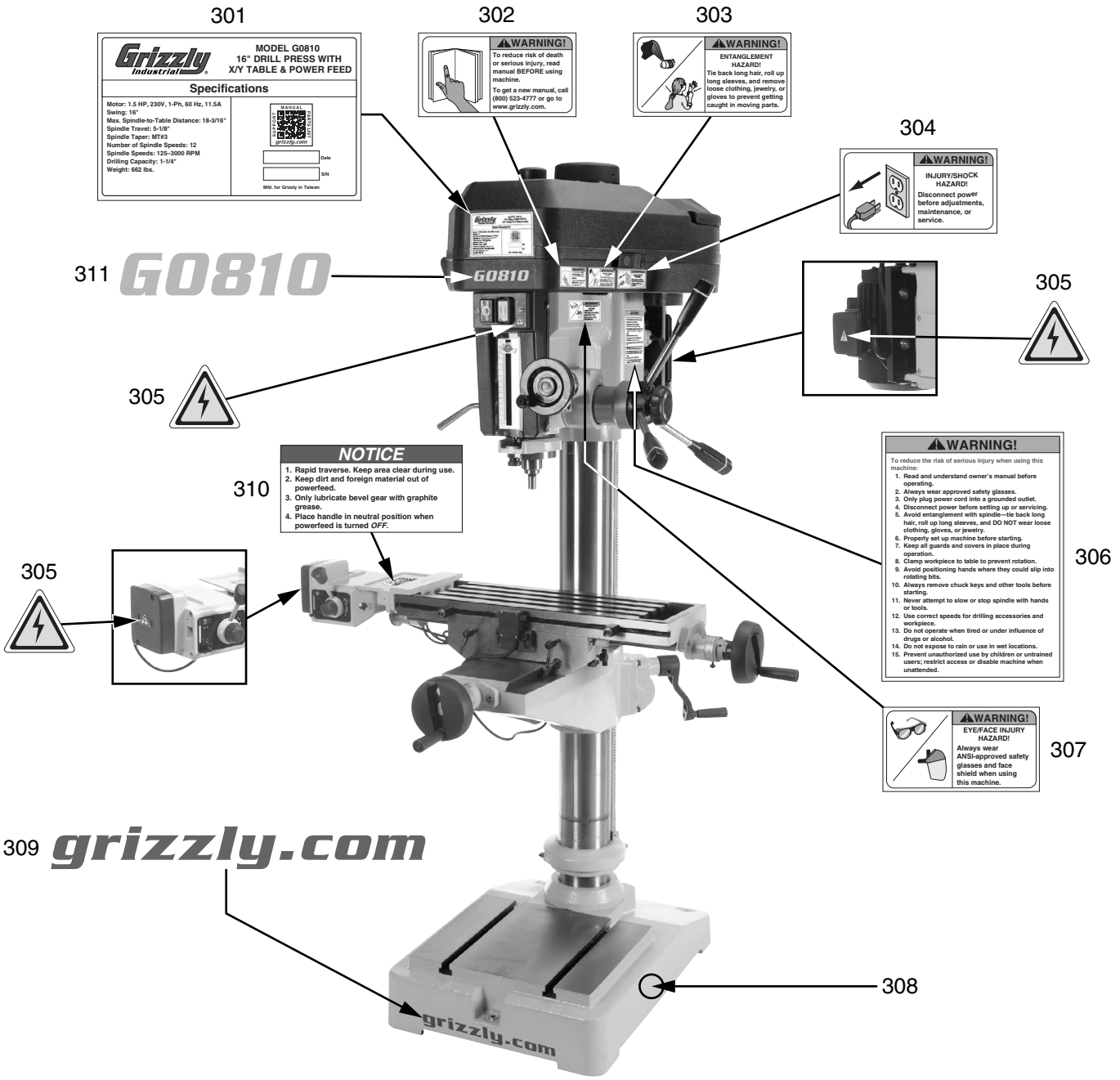

REF	PART #	DESCRIPTION
301	P0810301	MACHINE ID LABEL
302	P0810302	READ MANUAL LABEL
303	P0810303	ENTANGLEMENT WARNING LABEL
304	P0810304	DISCONNECT POWER LABEL
305	P0810305	ELECTRICITY LABEL
306	P0810306	GENERAL WARNING LABEL

REF	PART #	DESCRIPTION
307	P0810307	EYE/FACE INJURY WARNING LABEL
308	P0810308	TOUCH-UP PAINT, GRIZZLY BEIGE
309	P0810309	GRIZZLY.COM LABEL
310	P0810310	POWER FEED RAPID TRAVERSE NOTICE
311	P0810311	MODEL NUMBER LABEL

⚠WARNING

Safety labels help reduce the risk of serious injury caused by machine hazards. If any label comes off or becomes unreadable, the owner of this machine MUST replace it in the original location before resuming operations. For replacements, contact (800) 523-4777 or www.grizzly.com.

WARRANTY & RETURNS

Grizzly Industrial, Inc. warrants every product it sells for a period of **1 year** to the original purchaser from the date of purchase. This warranty does not apply to defects due directly or indirectly to misuse, abuse, negligence, accidents, repairs or alterations or lack of maintenance. This is Grizzly's sole written warranty and any and all warranties that may be implied by law, including any merchantability or fitness, for any particular purpose, are hereby limited to the duration of this written warranty. We do not warrant or represent that the merchandise complies with the provisions of any law or acts unless the manufacturer so warrants. In no event shall Grizzly's liability under this warranty exceed the purchase price paid for the product and any legal actions brought against Grizzly shall be tried in the State of Washington, County of Whatcom.

We shall in no event be liable for death, injuries to persons or property or for incidental, contingent, special, or consequential damages arising from the use of our products.

The manufacturers reserve the right to change specifications at any time because they constantly strive to achieve better quality equipment. We make every effort to ensure that our products meet high quality and durability standards and we hope you never need to use this warranty.

In the event you need to use this warranty, contact us by mail or phone and give us all the details. We will then issue you a "Return Number," which must be clearly posted on the outside as well as the inside of the carton. We will not accept any item back without this number. Proof of purchase must accompany the merchandise.

Please feel free to write or call us if you have any questions about the machine or the manual.

Thank you again for your business and continued support. We hope to serve you again soon.

For further information about the warranty, visit **https://www.grizzly.com/forms/warranty** or scan the QR code below to be automatically directed to our warranty page.

WARRANTY

grizzly.com

grizzly.com®

TOOL WEBSITE

Buy Direct and Save with Grizzly® – Trusted, Proven and a Great Value!

~Since 1983~

Visit Our Website Today For Current Specials!

ORDER

24 HOURS A DAY!

1-800-523-4777

