SECTION 9: PARTS

Base

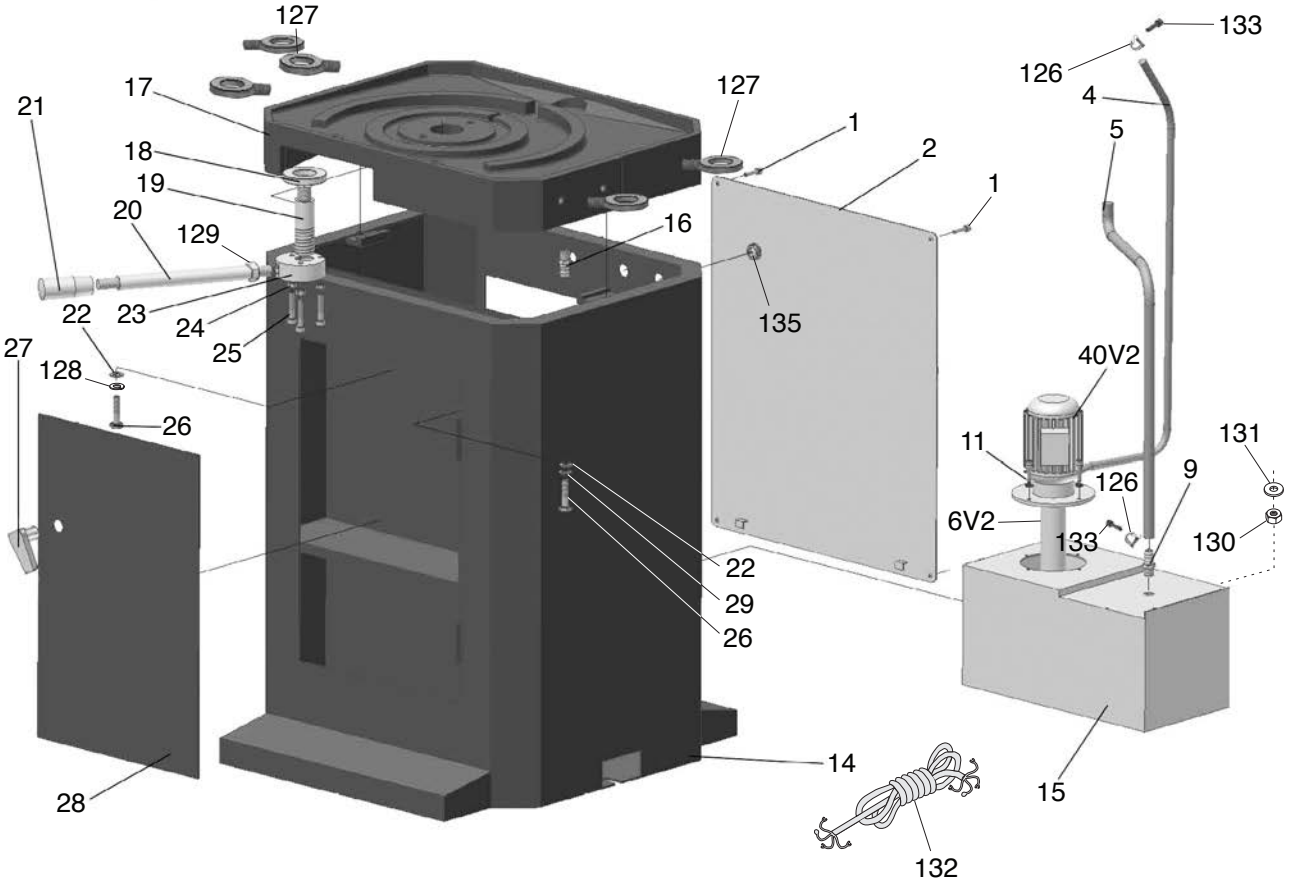

REF	PART #	DESCRIPTION
1	P0783001	CAP SCREW M5-.8 X 8
2	P0783002	REAR COVER
4	P0783004	COOLANT HOSE OUTFLOW 1/2" X 60"
5	P0783005	COOLANT HOSE INFLOW 1-1/2" X 18"
6V2	P0783006V2	COOLANT PICKUP TUBE V2.10.17
9	P0783009	HOSE FITTING M24-2 X 12, L43 BRASS
11	P0783011	PHLP HD SCR M5-.8 X 6
14	P0783014	MACHINE STAND
15	P0783015	COOLANT TANK 2-GALLON
16	P0783016	STRAINER 60MM
17	P0783017	STAND TOP PLATE
18	P0783018	SPACER 34 ID X 64 OD
19	P0783019	STUD-UDE M26-2.5 X 100
20	P0783020	LOCK LEVER M16-2 X 20
21	P0783021	LOCK LEVER HANDLE 85L M16-2
22	P0783022	FLAT WASHER 10MM
23	P0783023	TENSION NUT M26-2.5

REF	PART #	DESCRIPTION
24	P0783024	HEX NUT M8-1.25
25	P0783025	CAP SCREW M8-1.25 X 40
26	P0783026	CAP SCREW M10-1.5 X 45
27	P0783027	DOOR LATCH
28	P0783028	FRONT ACCESS DOOR
29	P0783029	LOCK WASHER 10MM
40V2	P0783040V2	PUMP MOTOR 40W 220V 3-PH ASSY V2.10.17
126	P0783126	COOLANT HOSE CLAMP 1/2"
127	P0783127	EYE BOLT 32MM, M12-1.75 X 22
128	P0783128	LOCK WASHER 10MM
129	P0783129	HEX NUT M16-2
130	P0783130	HEX NUT M24-2
131	P0783131	FLAT WASHER 24MM
132	P0783132	POWER CORD 20G 3W 72" NO PLUG
133	P0783133	PHLP HD SCR M5-.8 X 35
135	P0783135	STRAIN RELIEF TYPE-3 PG20

Please Note: *We do our best to stock replacement parts whenever possible, but we cannot guarantee that all parts shown here are available for purchase. Call* ***(800) 523-4777*** *or visit our online parts store at* ***www.grizzly.com*** *to check for availability.*

BUY PARTS ONLINE AT GRIZZLY.COM!
Scan QR code to visit our Parts Store.

Vise

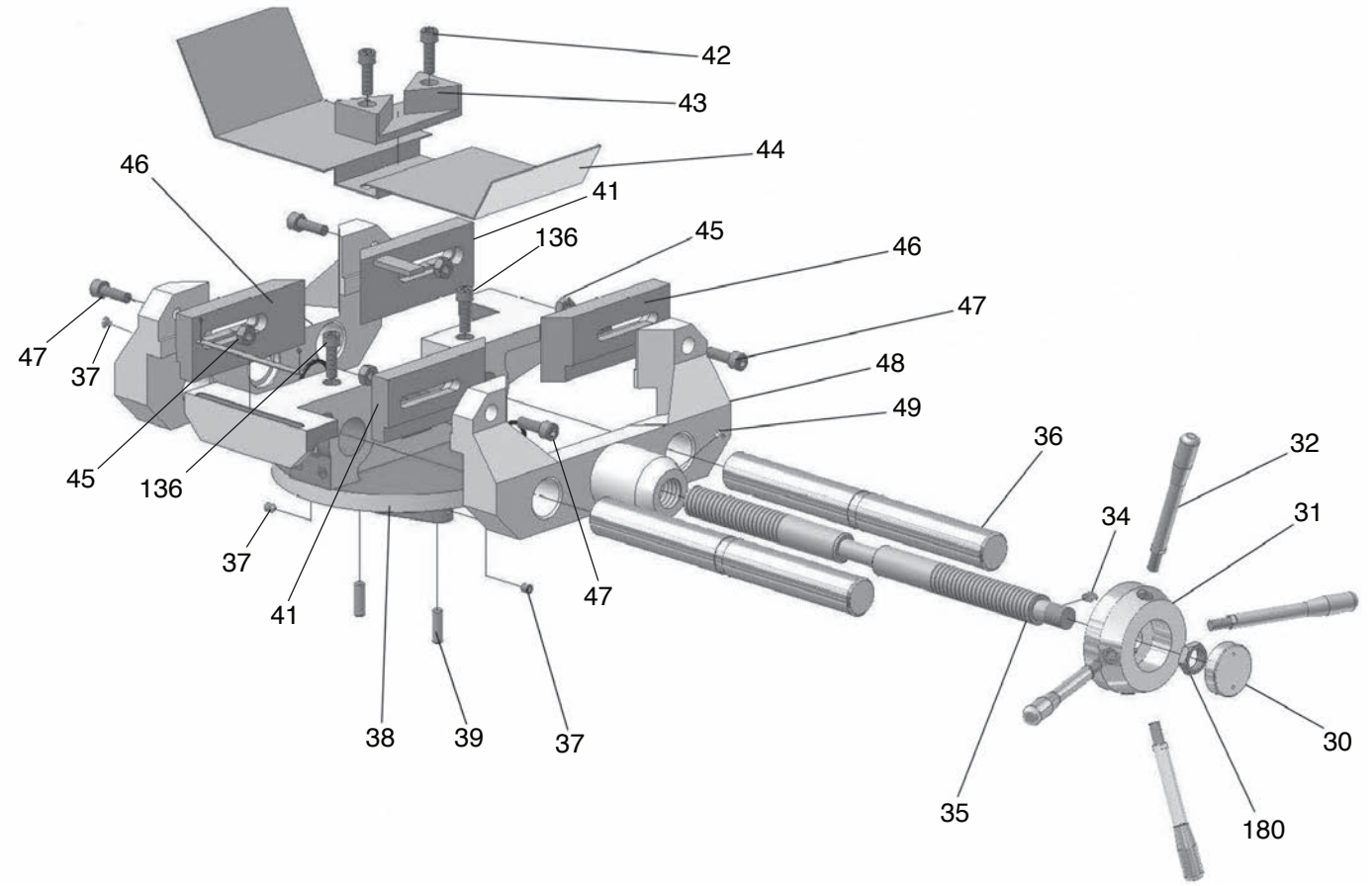

REF	PART #	DESCRIPTION
30	P0783030	VISE HANDLE HUB COVER
31	P0783031	HANDLE HUB
32	P0783032	LEVER HANDLE 160L M10-1.5 X 10
34	P0783034	KEY 6 X 6 X 10
35	P0783035	LEADSCREW
36	P0783036	GUIDE BAR
37	P0783037	SET SCREW M8-1.25 X 10
38	P0783038	VISE BASE
39	P0783039	ROLL PIN 10 X 30
41	P0783041	VISE JAW LEFT BEVEL

REF	PART #	DESCRIPTION
42	P0783042	CAP SCREW M6-1 X 24
43	P0783043	SPLASH GUARD SUPPORT
44	P0783044	SPLASH GUARD
45	P0783045	HEX NUT M8-1.25
46	P0783046	VISE JAW RIGHT BEVEL
47	P0783047	CAP SCREW M8-1.25 X 30
48	P0783048	VISE BODY
49	P0783049	OIL CUP M8-1.25 X 7
136	P0783136	CAP SCREW M8-1.25 X 12
180	P0783180	HEX NUT M20-2.5

BUY PARTS ONLINE AT GRIZZLY.COM!
Scan QR code to visit our Parts Store.

Motor

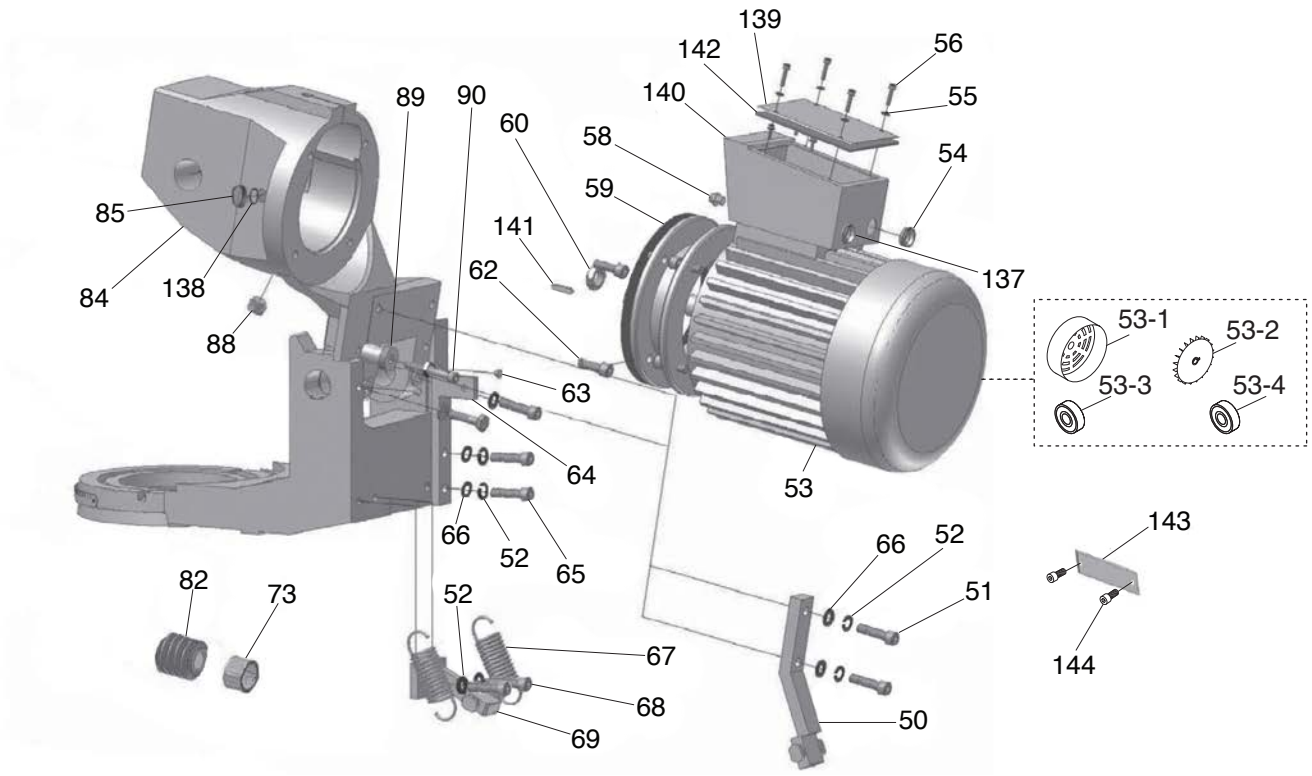

REF	PART #	DESCRIPTION
50	P0783050	SPRING ARM (UPPER)
51	P0783051	CAP SCREW M8-1.25 X 25
52	P0783052	LOCK WASHER 8MM
53	P0783053	MOTOR 2.7HP 220V 3-PH
53-1	P0783053-1	MOTOR FAN COVER
53-2	P0783053-2	MOTOR FAN
53-3	P0783053-3	BALL BEARING 6205ZZ
53-4	P0783053-4	BALL BEARING 6205ZZ
54	P0783054	STRAIN RELIEF TYPE-3 PG15
55	P0783055	FLAT WASHER 5MM
56	P0783056	CAP SCREW M5-.8 X 10
58	P0783058	TRIGGER BUTTON CONNECTION
59	P0783059	MOTOR GASKET
60	P0783060	SPANNER NUT M20-1.5 LH
62	P0783062	CAP SCREW M10-1.5 X 20
63	P0783063	BALL OILER 10MM PRESS-IN
64	P0783064	HOOD ARM MOUNTING BRACKET
65	P0783065	CAP SCREW M8-1.25 X 25
66	P0783066	FLAT WASHER 8MM

REF	PART #	DESCRIPTION
67	P0783067	HEADSTOCK EXTENSION SPRING
68	P0783068	CAP SCREW M8-1.25 X 25
69	P0783069	SPRING ARM (LOWER)
73	P0783073	SPACER 44 X 17
82	P0783082	WORM
84	P0783084	MOTOR HOUSING
85	P0783085	OIL SIGHT GLASS 24MM
88	P0783088	DRAIN PLUG M16-2 X 12
89	P0783089	KNURLED NUT M10-1.5
90	P0783090	CAP SCREW M10-1.5 X 80
137	P0783137	STRAIN RELIEF TYPE-3 PG20
138	P0783138	LOCK WASHER 10MM
139	P0783139	CONTROL BOX COVER
140	P0783140	CONTROL BOX
141	P0783141	KEY 6 X 6 X 30
142	P0783142	RUBBER GASKET
143	P0783143	MOTOR SPEC PLATE
144	P0783144	CAP SCREW M3-.5 X 6

BUY PARTS ONLINE AT GRIZZLY.COM!
Scan QR code to visit our Parts Store.

Column & Headstock

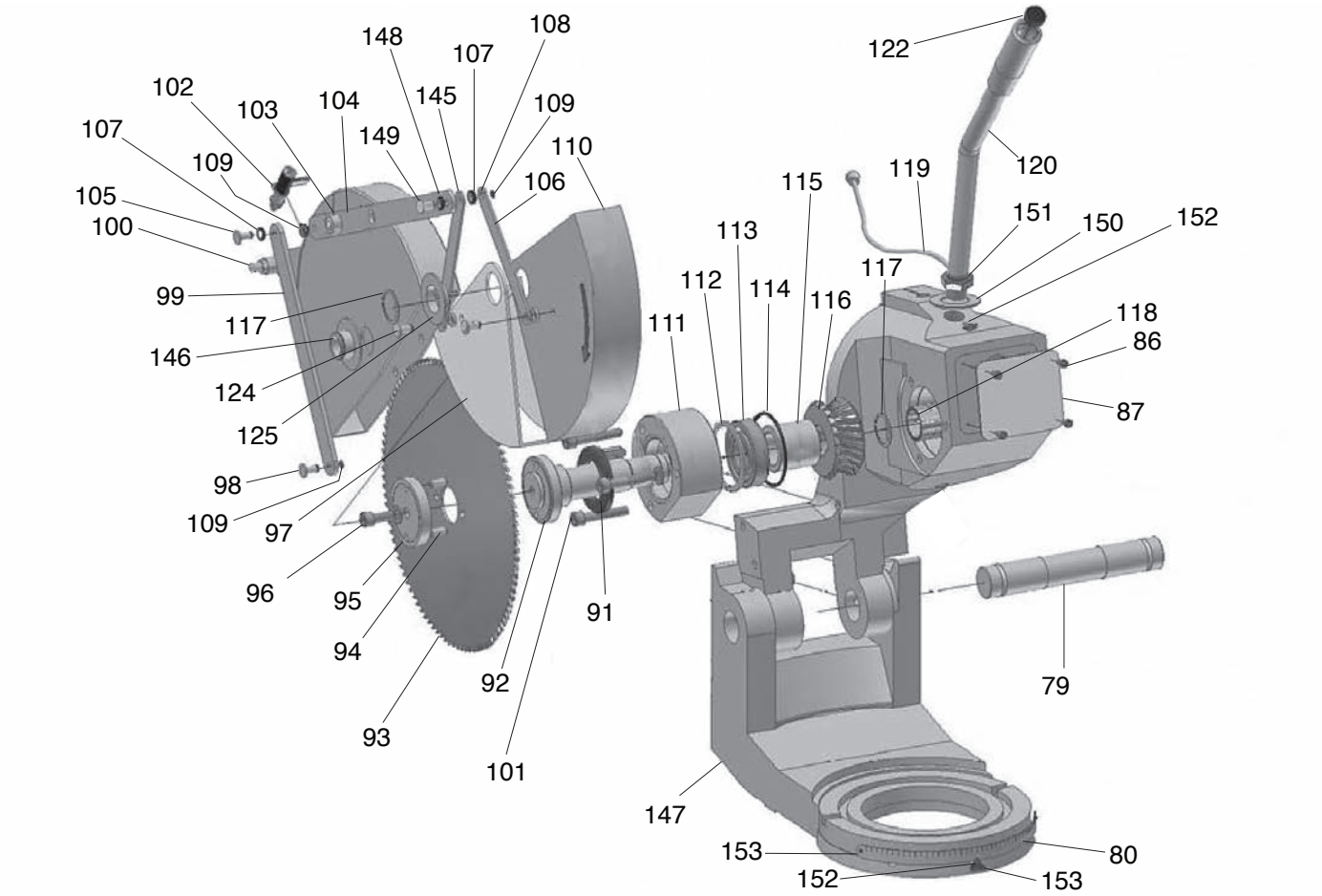

REF	PART #	DESCRIPTION
79	P0783079	PIVOT SHAFT
80	P0783080	MITER SCALE
86	P0783086	CAP SCREW M3-.5 X 6
87	P0783087	IDENTIFICATION PLATE
91	P0783091	OIL SEAL 45 X 65 X 14
92	P0783092	BLADE SPINDLE
93	P0783093	SAW BLADE 11" X 180-TOOTH
94	P0783094	ROLL PIN 8 X 20
95	P0783095	BLADE FLANGE
96	P0783096	CAP SCREW M10-1.5 X 25 LH
97	P0783097	LOWER BLADE HOOD
98	P0783098	CLEVIS PIN 8 X 18 GROOVED
99	P0783099	BLADE HOOD LINKAGE 9-1/2"
100	P0783100	HOOD ROD PIVOT
101	P0783101	CAP SCREW M10-1.5 X 60
102	P0783102	COOLANT SHUT-OFF VALVE
103	P0783103	EXT RETAINING RING 9MM
104	P0783104	BLADE HOOD LINKAGE 11-1/2"
105	P0783105	CLEVIS PIN 8 X 15 GROOVED
106	P0783106	BLADE HOOD LINKAGE 7-1/2"
107	P0783107	SPACER 8 X 3MM (NYLON)
108	P0783108	BLADE HOOD LINKAGE 6-1/2"
109	P0783109	EXT RETAINING RING 8MM

REF	PART #	DESCRIPTION
110	P0783110	UPPER BLADE HOOD
111	P0783111	BEARING HOUSING
112	P0783112	EXT RETAINING RING 72MM
113	P0783113	BALL BEARING 6207-OPEN
114	P0783114	O-RING 75 X 2.7
115	P0783115	SPACER
116	P0783116	WORM GEAR
117	P0783117	EXT RETAINING RING 32MM
118	P0783118	NEEDLE BEARING BK3026
119	P0783119	LEVER ARM CABLE 36" RUBBER
120	P0783120	LEVER ARM M22-2.5
122	P0783122	POWER BUTTON ONPOW LAS1-A 5A
124	P0783124	CLEVIS PIN 8 X 13 GROOVED
125	P0783125	SPACER 2 X 30MM (NYLON)
145	P0783145	HOOD ROD PIVOT
146	P0783146	HOOD PIVOT SPACER
147	P0783147	BASE
148	P0783148	SPACER 8 X 2MM (NYLON)
149	P0783149	CLEVIS PIN 8 X 22 GROOVED
150	P0783150	FLAT WASHER 22MM
151	P0783151	HEX NUT M22-2.5
152	P0783152	LEVER ARM POINTER
153	P0783153	RIVET 2 X 6MM NAMEPLATE, STEEL

BUY PARTS ONLINE AT GRIZZLY.COM!
Scan QR code to visit our Parts Store.

Electrical Parts

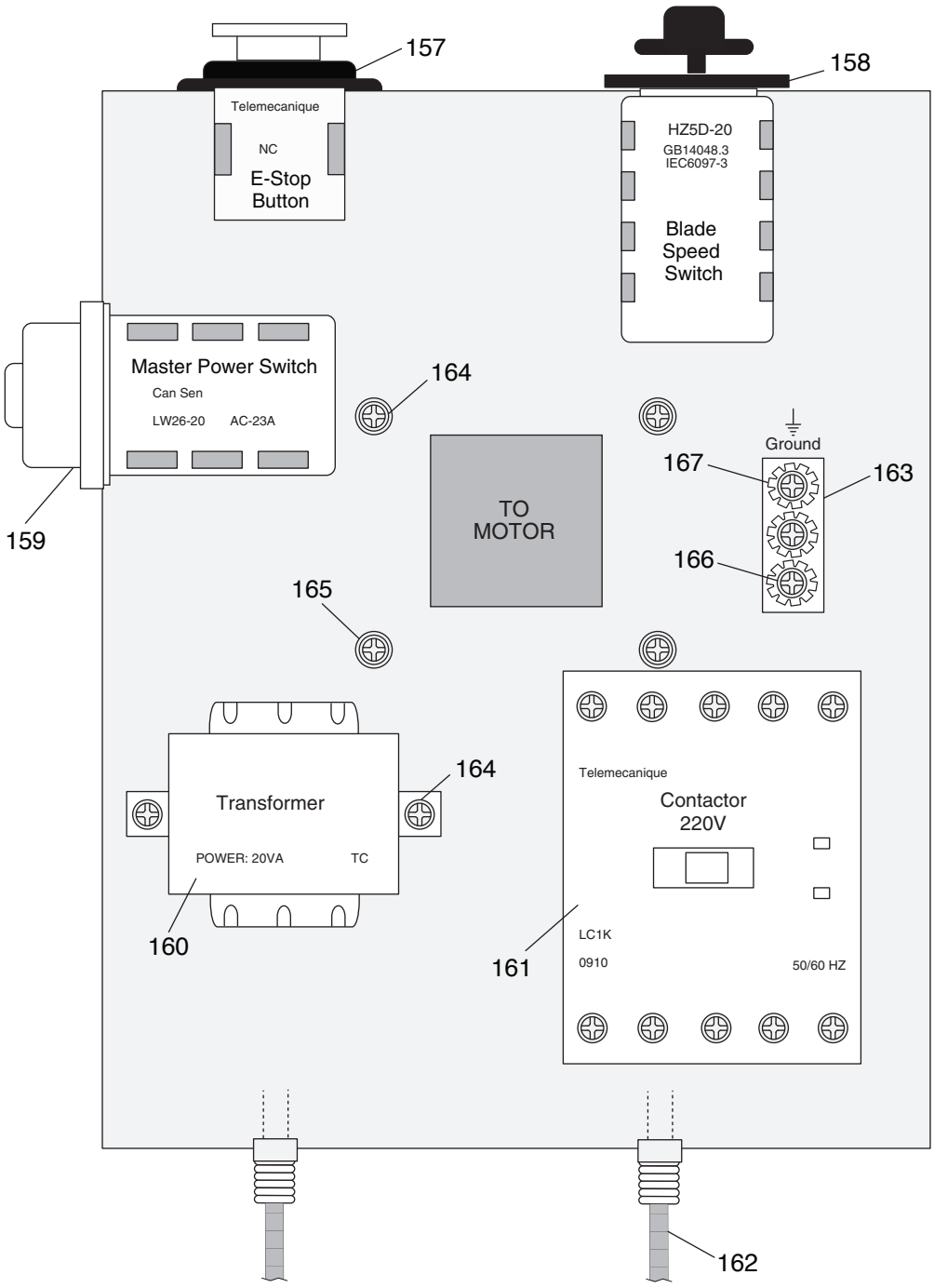

REF	PART #	DESCRIPTION
157	P0783157	E-STOP BUTTON TELE ZB2-BE102C
158	P0783158	ROTARY SWITCH CANSEN HZ5D-20 1/0/2
159	P0783159	ROTARY SWITCH CANSEN LW26-20 24V
160	P0783160	TRANSFORMER 20VA-TC 230V/400V-24V
161	P0783161	CONTACTOR TELE LC1K-0910 24V
162	P0783162	PUMP CORD 3-WIRE, 72"

REF	PART #	DESCRIPTION
163	P0783163	GROUNDING BLOCK 3-TERMINAL
164	P0783164	PHLP HD SCR M4-.7 X 6
165	P0783165	FLAT WASHER 4MM
166	P0783166	PHLP HD SCR M5-.8 X 6
167	P0783167	EXT TOOTH WASHER 5MM

BUY PARTS ONLINE AT GRIZZLY.COM!
Scan QR code to visit our Parts Store.

Labels & Cosmetics

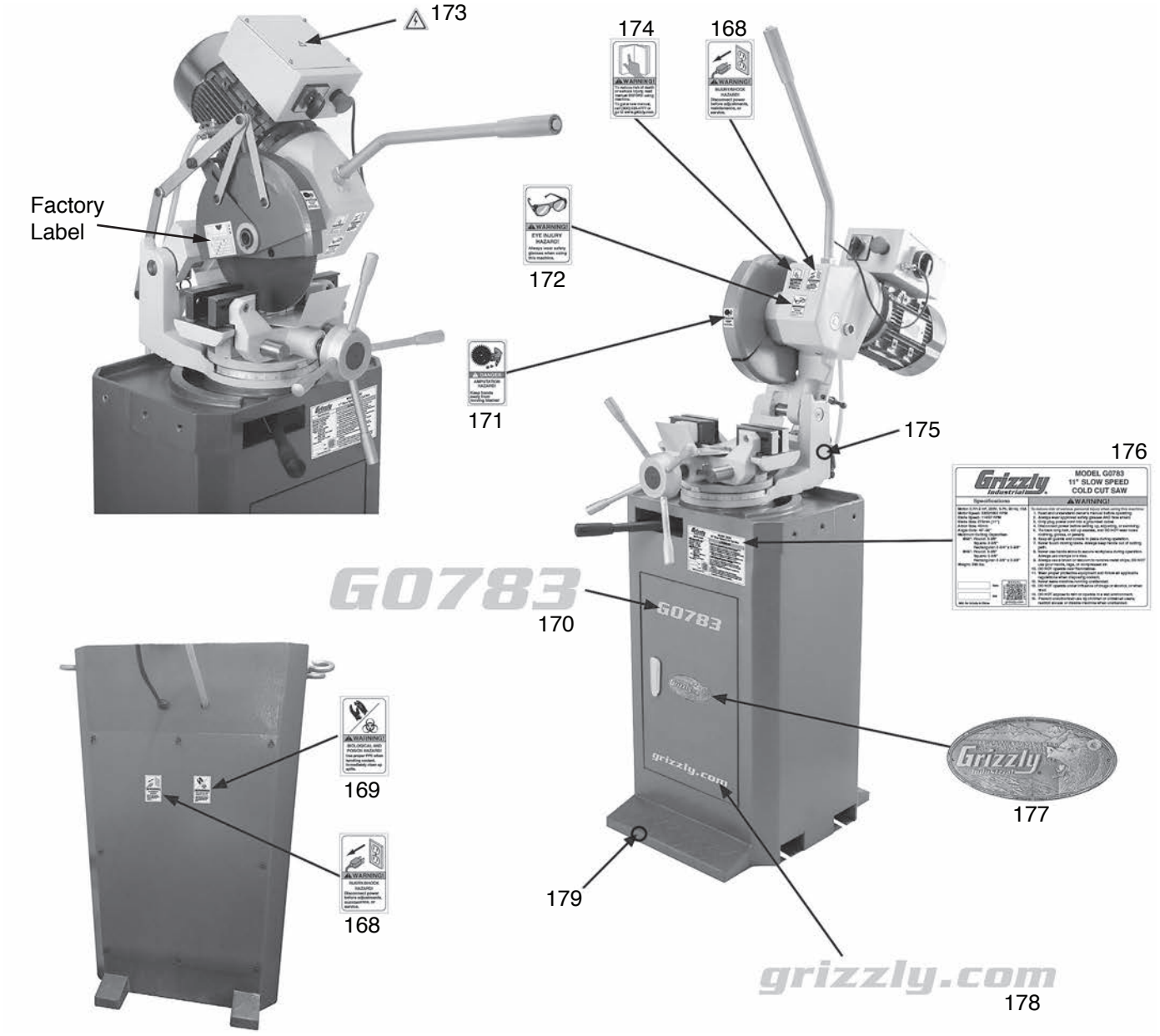

REF	PART #	DESCRIPTION
168	P0783168	DISCONNECT POWER LABEL
169	P0783169	BIOLOGICAL/POISON LABEL
170	P0783170	MODEL NUMBER LABEL
171	P0783171	BLADE/AMPUTATION LABEL
172	P0783172	SAFETY GLASSES LABEL
173	P0783173	ELECTRICITY LABEL

REF	PART #	DESCRIPTION
174	P0783174	READ MANUAL LABEL
175	P0783175	GRIZZLY PUTTY TOUCH-UP PAINT
176	P0783176	MACHINE ID LABEL
177	P0783177	GRIZZLY NAMEPLATE-MINI
178	P0783178	GRIZZLY.COM LABEL
179	P0783179	GRIZZLY GREEN TOUCH-UP PAINT

⚠WARNING

Safety labels warn about machine hazards and ways to prevent injury. The owner of this machine MUST maintain the original location and readability of the labels on the machine. If any label is removed or becomes unreadable, REPLACE that label before using the machine again. Contact Grizzly at (800) 523-4777 or www.grizzly.com to order new labels.

BUY PARTS ONLINE AT GRIZZLY.COM!
Scan QR code to visit our Parts Store.