MODEL G0783
11" SLOW SPEED COLD CUT SAW
OWNER'S MANUAL
(For models manufactured since 10/17)



COPYRIGHT © JANUARY, 2016 BY GRIZZLY INDUSTRIAL, INC. REVISED AUGUST, 2018 (WK)
WARNING: NO PORTION OF THIS MANUAL MAY BE REPRODUCED IN ANY SHAPE OR FORM WITHOUT THE WRITTEN APPROVAL OF GRIZZLY INDUSTRIAL, INC.
#JH17567 PRINTED IN CHINA
V2.08.18

⚠ WARNING!

This manual provides critical safety instructions on the proper setup, operation, maintenance, and service of this machine/tool. Save this document, refer to it often, and use it to instruct other operators.

Failure to read, understand and follow the instructions in this manual may result in fire or serious personal injury—including amputation, electrocution, or death.

The owner of this machine/tool is solely responsible for its safe use. This responsibility includes but is not limited to proper installation in a safe environment, personnel training and usage authorization, proper inspection and maintenance, manual availability and comprehension, application of safety devices, cutting/sanding/grinding tool integrity, and the usage of personal protective equipment.

The manufacturer will not be held liable for injury or property damage from negligence, improper training, machine modifications or misuse.

⚠ WARNING!

Some dust created by power sanding, sawing, grinding, drilling, and other construction activities contains chemicals known to the State of California to cause cancer, birth defects or other reproductive harm. Some examples of these chemicals are:

- **Lead from lead-based paints.**
- **Crystalline silica from bricks, cement and other masonry products.**
- **Arsenic and chromium from chemically-treated lumber.**

Your risk from these exposures varies, depending on how often you do this type of work. To reduce your exposure to these chemicals: Work in a well ventilated area, and work with approved safety equipment, such as those dust masks that are specially designed to filter out microscopic particles.

Table of Contents

INTRODUCTION 2
- Contact Info 2
- Manual Accuracy 2
- Identification 3
- Controls & Components 4

SECTION 1: SAFETY 7
- Safety Instructions for Machinery 7
- Safety Instructions for Metal Cutting Saws 9

SECTION 2: POWER SUPPLY 10

SECTION 3: SETUP 12
- Unpacking 12
- Needed for Setup 12
- Inventory 12
- Cleanup 13
- Site Considerations 14
- Lifting & Placing 14
- Anchoring to Floor 15
- Assembly 15
- Test Run 17

SECTION 4: OPERATIONS 18
- Operation Overview 18
- Adjusting Vise 19
- Adjusting Miter Angle 20
- Changing Blade 20
- Adding/Changing Coolant 22
- Blade Terminology 23
- Blade Pitch 23
- Blade Feed Rate 25
- Blade Speed Selection 25
- Blade Break-in 25
- Adjusting Miter Lock Lever 26
- General Machine Tips 26

SECTION 5: ACCESSORIES 27

SECTION 6: MAINTENANCE 29
- Schedule 29
- Cleaning & Protecting 29
- Lubrication 29

SECTION 7: SERVICE 32
- Troubleshooting 32

SECTION 8: WIRING 34
- Wiring Safety Instructions 34
- Wiring Overview 35
- Wiring Diagram 36

SECTION 9: PARTS 37
- Base 37
- Vise 38
- Motor 39
- Column & Headstock 40
- Electrical Parts 41
- Labels & Cosmetics 42

WARRANTY AND RETURNS 43

INTRODUCTION

Contact Info

We stand behind our machines! If you have questions or need help, contact us with the information below. Before contacting, make sure you get the **serial number** and **manufacture date** from the machine ID label. This will help us help you faster.

Grizzly Technical Support
1815 W. Battlefield
Springfield, MO 65807
Phone: (570) 546-9663
Email: techsupport@grizzly.com

We want your feedback on this manual. What did you like about it? Where could it be improved? Please take a few minutes to give us feedback.

Grizzly Documentation Manager
P.O. Box 2069
Bellingham, WA 98227-2069
Email: manuals@grizzly.com

Manual Accuracy

We are proud to provide a high-quality owner's manual with your new machine!

We made every effort to be exact with the instructions, specifications, drawings, and photographs in this manual. Sometimes we make mistakes, but our policy of continuous improvement also means that **sometimes the machine you receive is slightly different than shown in the manual**.

If you find this to be the case, and the difference between the manual and machine leaves you confused or unsure about something, check our website for an updated version. We post current manuals and manual updates for free on our website at **www.grizzly.com**.

Alternatively, you can call our Technical Support for help. Before calling, make sure you write down the **Manufacture Date** and **Serial Number** from the machine ID label (see below). This information is required for us to provide proper tech support, and it helps us determine if updated documentation is available for your machine.

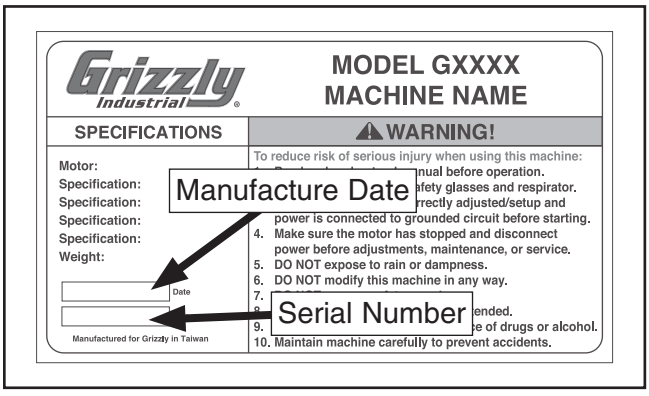

Identification

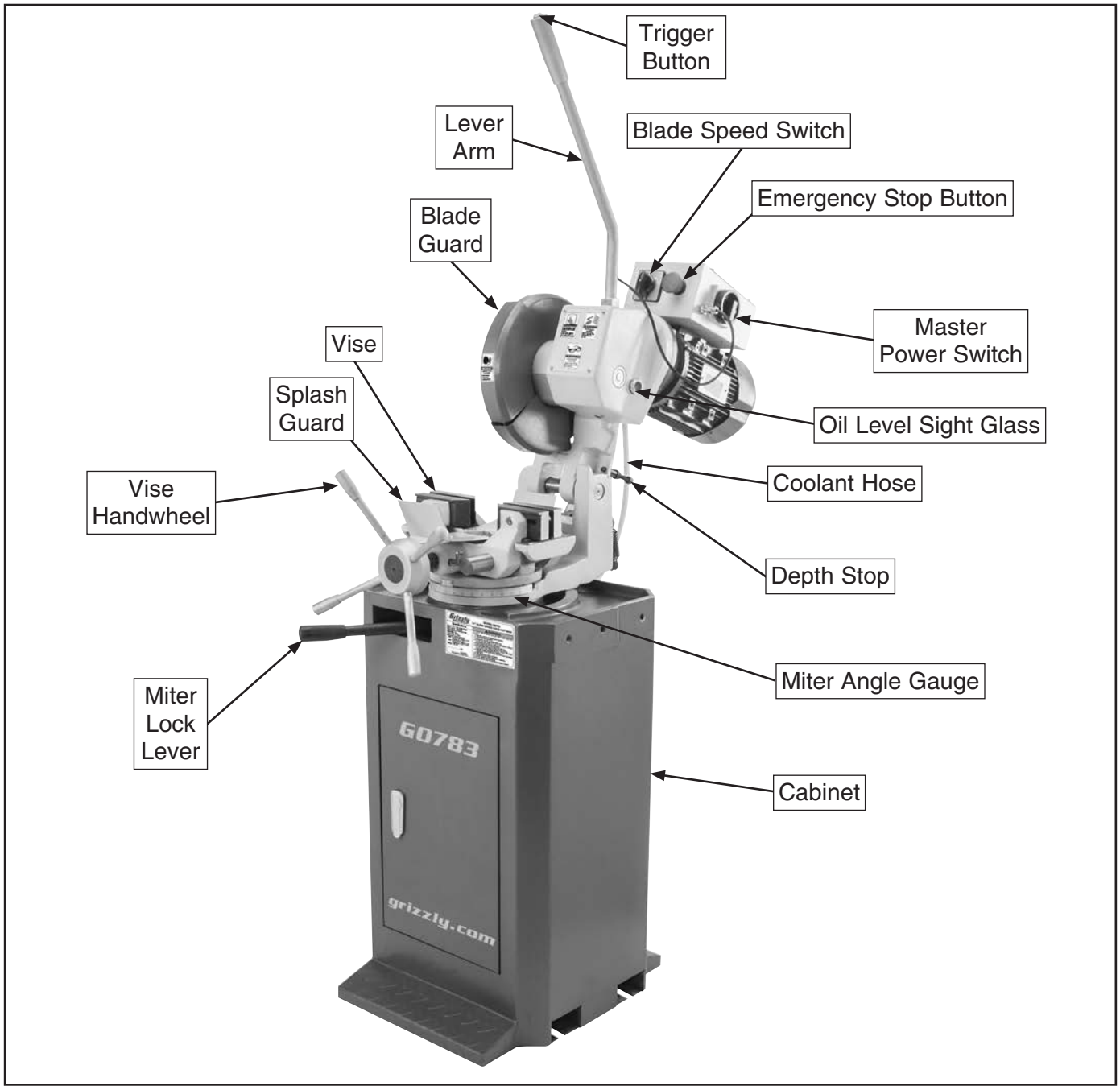

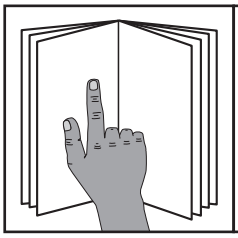

⚠WARNING

To reduce your risk of serious injury, read this entire manual BEFORE using machine.

Controls & Components

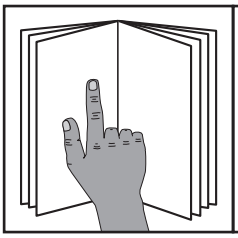

⚠WARNING

To reduce your risk of serious injury, read this entire manual BEFORE using machine.

Refer to **Figures 1–3** and the following descriptions to become familiar with the basic controls and components of this machine. Understanding these items and how they work will help you understand the rest of the manual and stay safe when operating this machine.

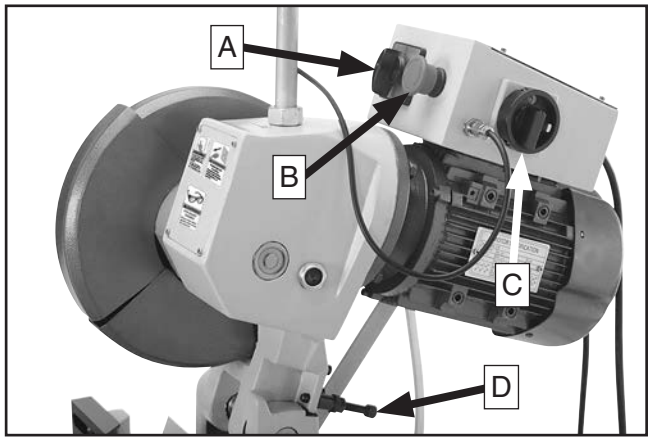

Figure 1. Control box and headstock.

A. Blade Speed Switch: Selects blade speed of "**1**" (57 RPM) or "**2**" (114 RPM).

B. Emergency Stop Button: Cuts power to motor and remains depressed until reset. Twist clockwise to reset.

C. Master Power Switch: Supplies power to machine for operation.

D. Depth Stop: Stops blade at specific depth to produce multiple same-depth cuts.

E. Cutting Fluid Valve: Enables flow of cutting fluid from reservoir to nozzle.

F. Lever Arm: Houses trigger button and lowers saw blade into workpiece.

G. Trigger Button: Turns motor ***ON***, rotating blade and activating cutting fluid pump.

H. Vise Handwheel: Opens and closes self-centering vise jaws to clamp workpiece.

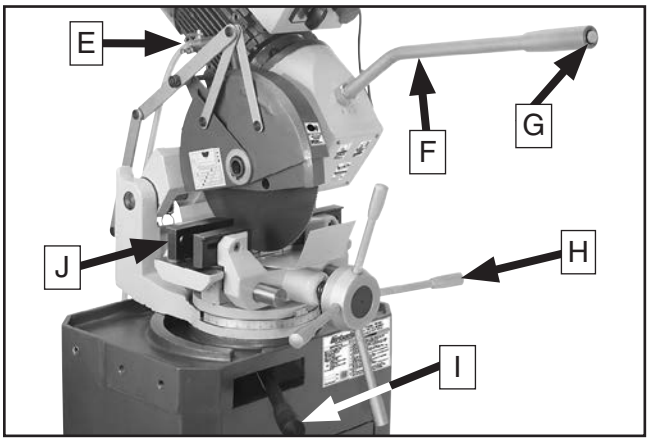

Figure 2. Saw controls.

I. Miter Lock Lever: Releases or locks rotation of saw base for angled cuts.

J. Vise Jaws: Independently adjustable vise jaws with beveled edges for saw blade clearance.

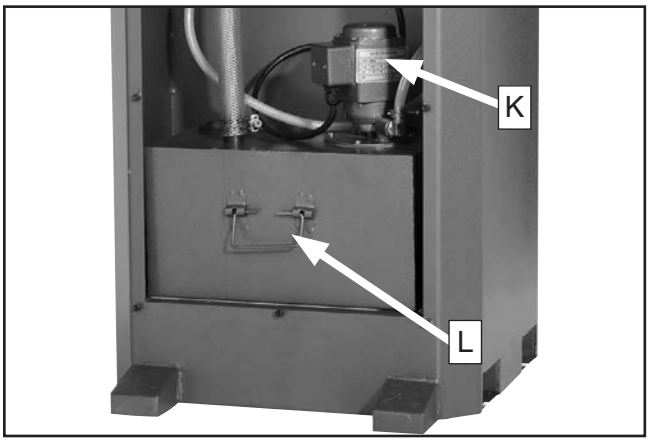

Figure 3. Cutting fluid reservoir and coolant pump.

K. Coolant Pump: Supplies cutting fluid from fluid reservoir to blade.

L. Cutting Fluid Reservoir: Holds cutting fluid and can be removed for disposal and cleaning.

MACHINE DATA SHEET

Customer Service #: (570) 546-9663 · To Order Call: (800) 523-4777 · Fax #: (800) 438-5901

MODEL G0783 11" SLOW SPEED COLD CUT SAW

Product Dimensions:

Weight	386 lbs.
Width (side-to-side) x Depth (front-to-back) x Height	18½ x 35 x 55½ in.
Foot Print (Length/Width)	20½ x 18½ in.

Shipping Dimensions:

Type	Wood Crate
Content	Machine
Weight	441 lbs.
Length/Width/Height	37 x 22 x 58 in.

Electrical:

Power Requirement	220V, 3-Phase, 60 Hz
Prewired Voltage	220V
Full-Load Current Rating	10A
Minimum Circuit Size	15A @ 220V
Connection Type	Cord And Plug
Power Cord Included	Yes
Power Cord Length	7½ ft.
Power Cord Gauge	14 AWG
Plug Included	No
Recommended Plug Type	L15-20
Switch Type	Power, Start, E-Stop, Dual Speed

Motor:

Main

Type	TEFC Induction
Horsepower	2.7 HP/1.9 HP
Voltage	220V
Phase	3-Phase
Amps	9.1A/6.3A
Number Of Speeds	2
Speed	3300/1650 RPM
Cycle	60 Hz
Power Transfer	Gear Drive
Bearings	Sealed & Permanently Lubricated

Coolant Pump

Type	TEFC Induction
Horsepower	40 Watts
Voltage	220V
Phase	3-Phase
Amps	0.4A
Speed	2760 RPM
Cycle	60 Hz
Number Of Speeds	1
Bearings	Shielded & Permanently Lubricated

Main Specifications:

Operation Information

Blade Speed	114/57 RPM
Blade Size	11 in. (275mm)
Arbor Size	40mm

Cutting Operation

Angle Cuts	45 – 90 deg.
Vise Jaw Depth	4½ in.
Vise Jaw Height	2 in.
Maximum Capacity Square @ 90°	2⅜ x 2⅜ in.
Maximum Capacity Rectangular @ 90°	2¾ x 2⅜ in.
Maximum Capacity Round @ 90°	2⅜ in.
Maximum Capacity Square @ 45°	2⅜ x 2⅜ in.
Maximum Capacity Rectangular @ 45°	2⅜ x 2⅜ in.
Maximum Capacity Round @ 45°	2⅜ in.

Construction

Table Construction	Casting
Saw Wheel Cover	Steel
Saw Wheel Guard	Steel
Body Construction	Casting
Paint	Enamel

Other Specifications:

Country of Origin	China
Warranty	1 Year
Approximate Assembly & Setup Time	1 Hour
Serial Number Location	Machine ID Label

Features:

2.7 HP, 2-speed motor
Gear-driven blade for low-RPM cutting
Cooling pump keeps blade from overheating
Dual-speed cutting ability

SECTION 1: SAFETY

For Your Own Safety, Read Instruction Manual Before Operating This Machine

The purpose of safety symbols is to attract your attention to possible hazardous conditions. This manual uses a series of symbols and signal words intended to convey the level of importance of the safety messages. The progression of symbols is described below. Remember that safety messages by themselves do not eliminate danger and are not a substitute for proper accident prevention measures. Always use common sense and good judgment.

⚠DANGER **Indicates an imminently hazardous situation which, if not avoided, WILL result in death or serious injury.**

⚠WARNING **Indicates a potentially hazardous situation which, if not avoided, COULD result in death or serious injury.**

⚠CAUTION **Indicates a potentially hazardous situation which, if not avoided, MAY result in minor or moderate injury. It may also be used to alert against unsafe practices.**

NOTICE **This symbol is used to alert the user to useful information about proper operation of the machine.**

Safety Instructions for Machinery

⚠WARNING

OWNER'S MANUAL. Read and understand this owner's manual BEFORE using machine.

TRAINED OPERATORS ONLY. Untrained operators have a higher risk of being hurt or killed. Only allow trained/supervised people to use this machine. When machine is not being used, disconnect power, remove switch keys, or lock-out machine to prevent unauthorized use—especially around children. Make your workshop kid proof!

DANGEROUS ENVIRONMENTS. Do not use machinery in areas that are wet, cluttered, or have poor lighting. Operating machinery in these areas greatly increases the risk of accidents and injury.

MENTAL ALERTNESS REQUIRED. Full mental alertness is required for safe operation of machinery. Never operate under the influence of drugs or alcohol, when tired, or when distracted.

ELECTRICAL EQUIPMENT INJURY RISKS. You can be shocked, burned, or killed by touching live electrical components or improperly grounded machinery. To reduce this risk, only allow qualified service personnel to do electrical installation or repair work, and always disconnect power before accessing or exposing electrical equipment.

DISCONNECT POWER FIRST. Always disconnect machine from power supply BEFORE making adjustments, changing tooling, or servicing machine. This prevents an injury risk from unintended startup or contact with live electrical components.

EYE PROTECTION. Always wear ANSI-approved safety glasses or a face shield when operating or observing machinery to reduce the risk of eye injury or blindness from flying particles. Everyday eyeglasses are NOT approved safety glasses.

⚠WARNING

WEARING PROPER APPAREL. Do not wear clothing, apparel or jewelry that can become entangled in moving parts. Always tie back or cover long hair. Wear non-slip footwear to reduce risk of slipping and losing control or accidentally contacting cutting tool or moving parts.

HAZARDOUS DUST. Dust created by machinery operations may cause cancer, birth defects, or long-term respiratory damage. Be aware of dust hazards associated with each workpiece material. Always wear a NIOSH-approved respirator to reduce your risk.

HEARING PROTECTION. Always wear hearing protection when operating or observing loud machinery. Extended exposure to this noise without hearing protection can cause permanent hearing loss.

REMOVE ADJUSTING TOOLS. Tools left on machinery can become dangerous projectiles upon startup. Never leave chuck keys, wrenches, or any other tools on machine. Always verify removal before starting!

USE CORRECT TOOL FOR THE JOB. Only use this tool for its intended purpose—do not force it or an attachment to do a job for which it was not designed. Never make unapproved modifications—modifying tool or using it differently than intended may result in malfunction or mechanical failure that can lead to personal injury or death!

AWKWARD POSITIONS. Keep proper footing and balance at all times when operating machine. Do not overreach! Avoid awkward hand positions that make workpiece control difficult or increase the risk of accidental injury.

CHILDREN & BYSTANDERS. Keep children and bystanders at a safe distance from the work area. Stop using machine if they become a distraction.

GUARDS & COVERS. Guards and covers reduce accidental contact with moving parts or flying debris. Make sure they are properly installed, undamaged, and working correctly BEFORE operating machine.

FORCING MACHINERY. Do not force machine. It will do the job safer and better at the rate for which it was designed.

NEVER STAND ON MACHINE. Serious injury may occur if machine is tipped or if the cutting tool is unintentionally contacted.

STABLE MACHINE. Unexpected movement during operation greatly increases risk of injury or loss of control. Before starting, verify machine is stable and mobile base (if used) is locked.

USE RECOMMENDED ACCESSORIES. Consult this owner's manual or the manufacturer for recommended accessories. Using improper accessories will increase the risk of serious injury.

UNATTENDED OPERATION. To reduce the risk of accidental injury, turn machine ***OFF*** and ensure all moving parts completely stop before walking away. Never leave machine running while unattended.

MAINTAIN WITH CARE. Follow all maintenance instructions and lubrication schedules to keep machine in good working condition. A machine that is improperly maintained could malfunction, leading to serious personal injury or death.

DAMAGED PARTS. Regularly inspect machine for damaged, loose, or mis-adjusted parts—or any condition that could affect safe operation. Immediately repair/replace BEFORE operating machine. For your own safety, DO NOT operate machine with damaged parts!

MAINTAIN POWER CORDS. When disconnecting cord-connected machines from power, grab and pull the plug—NOT the cord. Pulling the cord may damage the wires inside. Do not handle cord/plug with wet hands. Avoid cord damage by keeping it away from heated surfaces, high traffic areas, harsh chemicals, and wet/damp locations.

EXPERIENCING DIFFICULTIES. If at any time you experience difficulties performing the intended operation, stop using the machine! Contact our Technical Support at (570) 546-9663.

Additional Safety for Metal Cutting Saws

⚠WARNING

Serious injury or death can occur from getting fingers, hair, or clothing entangled in rotating or moving parts. Workpieces can be ejected by saw, striking operator or bystanders. Long-term respiratory damage can occur from breathing metal dust created while cutting. To minimize risk of injury, anyone operating this machine MUST completely heed hazards and warnings below.

BLADE CONDITION. Do not operate with dull, cracked or badly worn blade. Inspect blades for cracks and missing teeth before each use.

HAND PLACEMENT. Never position fingers or thumbs in line with the cut. Hands could be crushed in vise or from falling machine components.

ENTANGLEMENT HAZARDS. Do not operate this saw without blade guard in place. Loose clothing, jewelry, long hair and work gloves can be drawn into working parts.

BLADE REPLACEMENT. When replacing blades, disconnect the machine from power, wear gloves to protect hands and safety glasses to protect eyes.

WORKPIECE HANDLING. Always support the workpiece with table, vise, or some type of support fixture. Flag long pieces to avoid a tripping hazard. Never hold the workpiece with your hands during a cut.

LOSS OF STABILITY. Unsupported workpieces may jeopardize machine stability and cause the machine to tip and fall, which could cause serious injury.

POWER INTERRUPTION. Unplug machine after power interruption. Machines without magnetic switches can start up after power is restored.

FIRE HAZARD. Use EXTREME CAUTION if cutting magnesium. Using the wrong cutting fluid will lead to chip fire and possible explosion.

CUTTING FLUID SAFETY. Always follow manufacturer's cutting-fluid safety instructions. Pay particular attention to contact, contamination, inhalation, storage, and disposal warnings. Spilled cutting fluid invites slipping hazards.

ATTENTION TO WORK AREA. Never leave a machine running and unattended. Pay attention to the actions of others in the area to avoid unintended accidents.

MAINTENANCE/SERVICE. All inspections, adjustments, and maintenance are to be done with the power OFF and the plug pulled from the outlet. Wait for all moving parts to come to a complete stop.

HEARING PROTECTION & HAZARDS. Noise generated by blade and workpiece vibration, material handling, and power transmission can cause permanent hearing loss over time and interfere with communication and audible signals.

HOT SURFACES. Contact with hot surfaces from machine components, ejections of hot chips, swarf, and the workpiece itself can cause burns.

⚠WARNING

No list of safety guidelines can be complete. Every shop environment is different. Like all machines there is danger associated with the Model G0783. Accidents are frequently caused by lack of familiarity or failure to pay attention. Use this machine with respect and caution to lessen the possibility of operator injury. If normal safety precautions are overlooked or ignored, serious personal injury may occur.

SECTION 2: POWER SUPPLY

Availability

Before installing the machine, consider the availability and proximity of the required power supply circuit. If an existing circuit does not meet the requirements for this machine, a new circuit must be installed. To minimize the risk of electrocution, fire, or equipment damage, installation work and electrical wiring must be done by an electrician or qualified service personnel in accordance with all applicable codes and standards.



⚠WARNING

Electrocution, fire, shock, or equipment damage may occur if machine is not properly grounded and connected to power supply.

Full-Load Current Rating

The full-load current rating is the amperage a machine draws at 100% of the rated output power. On machines with multiple motors, this is the amperage drawn by the largest motor or sum of all motors and electrical devices that might operate at one time during normal operations.

Full-Load Current Rating at 220V ..... 10 Amps

The full-load current is not the maximum amount of amps that the machine will draw. If the machine is overloaded, it will draw additional amps beyond the full-load rating.

If the machine is overloaded for a sufficient length of time, damage, overheating, or fire may result—especially if connected to an undersized circuit. To reduce the risk of these hazards, avoid overloading the machine during operation and make sure it is connected to a power supply circuit that meets the specified circuit requirements.

Circuit Information

A power supply circuit includes all electrical equipment between the breaker box or fuse panel in the building and the machine. The power supply circuit used for this machine must be sized to safely handle the full-load current drawn from the machine for an extended period of time. (If this machine is connected to a circuit protected by fuses, use a time delay fuse marked D.)

⚠CAUTION

For your own safety and protection of property, consult an electrician if you are unsure about wiring practices or electrical codes in your area.

Note: *Circuit requirements in this manual apply to a dedicated circuit—where only one machine will be running on the circuit at a time. If machine will be connected to a shared circuit where multiple machines may be running at the same time, consult an electrician or qualified service personnel to ensure circuit is properly sized for safe operation.*

Circuit Requirements

This machine is prewired to operate on a power supply circuit that has a verified ground and meets the following requirements:

Nominal Voltage 208V, 220V, 230V, 240V
Cycle ..... 60 Hz
Phase 3-Phase
Power Supply Circuit ..... 15 Amps
Plug/Receptacle L15-20

Grounding Instructions

This machine MUST be grounded. In the event of certain malfunctions or breakdowns, grounding reduces the risk of electric shock by providing a path of least resistance for electric current.

The plug specified under "Circuit Requirements" on the previous page has a grounding prong that must be attached to the equipment-grounding wire on the included power cord. The plug must only be inserted into a matching receptacle (see following figure) that is properly installed and grounded in accordance with all local codes and ordinances.

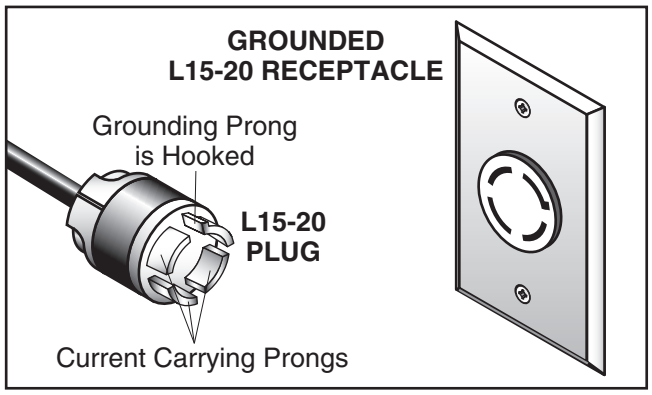

Figure 4. Typical L15-20 plug and receptacle.

⚠CAUTION

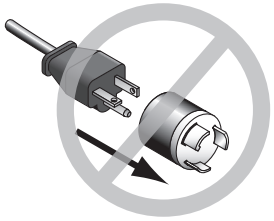

No adapter should be used with plug. If plug does not fit available receptacle, or if machine must be reconnected for use on a different type of circuit, reconnection must be performed by an electrician or qualified service personnel, and it must comply with all local codes and ordinances.

⚠WARNING

Serious injury could occur if you connect machine to power before completing setup process. DO NOT connect to power until instructed later in this manual.

Improper connection of the equipment-grounding wire can result in a risk of electric shock. The wire with green insulation (with or without yellow stripes) is the equipment-grounding wire. If repair or replacement of the power cord or plug is necessary, do not connect the equipment-grounding wire to a live (current carrying) terminal.

Check with a qualified electrician or service personnel if you do not understand these grounding requirements, or if you are in doubt about whether the tool is properly grounded. If you ever notice that a cord or plug is damaged or worn, disconnect it from power, and immediately replace it with a new one.

Extension Cords

We do not recommend using an extension cord with this machine. If you must use an extension cord, only use it if absolutely necessary and only on a temporary basis.

Extension cords cause voltage drop, which can damage electrical components and shorten motor life. Voltage drop increases as the extension cord size gets longer and the gauge size gets smaller (higher gauge numbers indicate smaller sizes).

Any extension cord used with this machine must be in good condition and contain a ground wire and matching plug/receptacle. Additionally, it must meet the following size requirements:

Minimum Gauge Size .....14 AWG
Maximum Length (Shorter is Better).....50 ft.

SECTION 3: SETUP

Unpacking

This machine was carefully packaged for safe transport. When unpacking, separate all enclosed items from packaging materials and inspect them for shipping damage. ***If items are damaged, please call us immediately at (570) 546-9663.***

IMPORTANT: Save all packaging materials until you are completely satisfied with the machine and have resolved any issues between Grizzly or the shipping agent. *You MUST have the original packaging to file a freight claim. It is also extremely helpful if you need to return your machine later.*



⚠WARNING

SUFFOCATION HAZARD!

Keep children and pets away from plastic bags or packing materials shipped with this machine. Discard immediately.

Needed for Setup

The following items are needed, but not included, for the setup/assembly of this machine.

Description	Qty
• Additional People	2
• Safety Glasses (Per Person)	1
• Cleaner/Degreaser (**Page 13**)	As Needed
• Disposable Shop Rags	As Needed
• Lifting Straps (Rated Min. 500 lbs.)	2
• Screwdriver Flat Head #2	1
• Open-End Wrench ⅞"	1
• Open-End Wrench 12mm	1

Inventory

The following is a list of items shipped with your machine. Before beginning setup, lay these items out and inventory them.

If any non-proprietary parts are missing (e.g. a nut or a washer), we will gladly replace them; or for the sake of expediency, replacements can be obtained at your local hardware store.

Small Item Inventory (Figure 5)	Qty
A. Lever Arm w/Hex Nut M22-2.5	1
B. Eye Bolts 28mm, M12-1.75 x 22	4
C. Miter Lock Lever Cap	1
D. Vise Handwheel Handles	4
E. Flat Washer 22mm	1

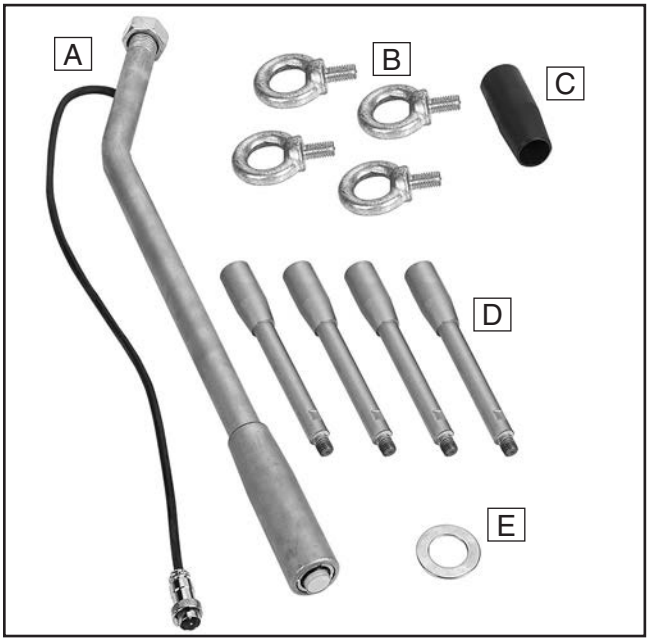

Figure 5. G0783 inventory.

NOTICE

If you cannot find an item on this list, carefully check around/inside the machine and packaging materials. Often, these items get lost in packaging materials while unpacking or they are pre-installed at the factory.

Cleanup

The unpainted surfaces of your machine are coated with a heavy-duty rust preventative that prevents corrosion during shipment and storage. This rust preventative works extremely well, but it will take a little time to clean.

Be patient and do a thorough job cleaning your machine. The time you spend doing this now will give you a better appreciation for the proper care of your machine's unpainted surfaces.

There are many ways to remove this rust preventative, but the following steps work well in a wide variety of situations. Always follow the manufacturer's instructions with any cleaning product you use and make sure you work in a well-ventilated area to minimize exposure to toxic fumes.

Before cleaning, gather the following:
- Disposable rags
- Cleaner/degreaser (WD•40 works well)
- Safety glasses & disposable gloves
- Plastic paint scraper (optional)

Basic steps for removing rust preventative:

1. Put on safety glasses.

2. Coat the rust preventative with a liberal amount of cleaner/degreaser, then let it soak for 5–10 minutes.

3. Wipe off the surfaces. If your cleaner/degreaser is effective, the rust preventative will wipe off easily. If you have a plastic paint scraper, scrape off as much as you can first, then wipe off the rest with the rag.

4. Repeat **Steps 2–3** as necessary until clean, then coat all unpainted surfaces with a quality metal protectant to prevent rust.



⚠WARNING

Gasoline and petroleum products have low flash points and can explode or cause fire if used to clean machinery. Avoid using these products to clean machinery.



⚠CAUTION

Many cleaning solvents are toxic if inhaled. Only work in a well-ventilated area.

NOTICE

Avoid harsh solvents like acetone or brake parts cleaner that may damage painted surfaces. Always test on a small, inconspicuous location first.

T23692—Orange Power Degreaser
A great product for removing the waxy shipping grease from the ***non-painted*** parts of the machine during clean up.



Call 1-800-523-4777 To Order

Figure 6. T23692 Orange Power Degreaser.

Site Considerations

Workbench Load

Refer to the **Machine Data Sheet** for the weight and footprint specifications of your machine. Some workbenches may require additional reinforcement to support the weight of the machine and workpiece materials.

Placement Location

Consider anticipated workpiece sizes and additional space needed for auxiliary stands, work tables, or other machinery when establishing a location for this machine in the shop. Below is the minimum amount of space needed for the machine.

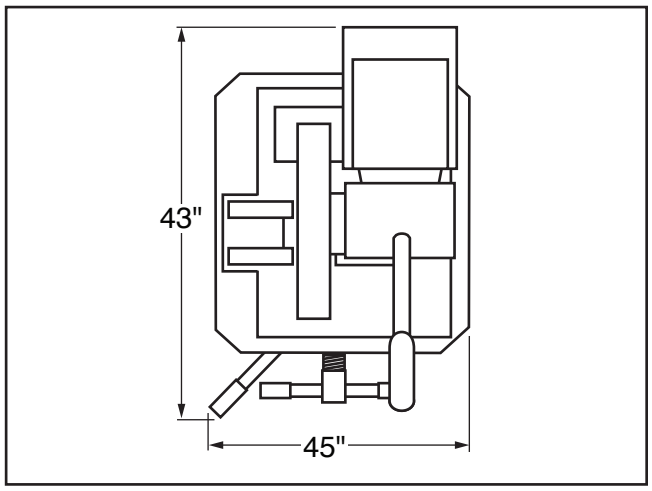

Figure 7. Minimum working clearances.

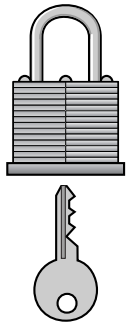

⚠CAUTION

Children and visitors may be seriously injured if unsupervised around this machine. Lock entrances to the shop or disable start switch or power connection to prevent unsupervised use.

Lifting & Placing

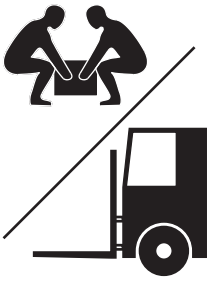

⚠WARNING

Lifting heavy machinery or parts without proper assistance or equipment may result in strains, back injuries, crushing injuries, or property damage.

To lift and place machine:

1. Remove hex bolts and hex nuts holding machine to pallet.
2. Thread (4) eye bolts (see **Figure 8**) into exterior of saw cabinet.
3. Secure saw headstock in downward position with a length of strapping or rope, and ensure miter lock lever is in locked position (see **Figure 8**).
4. Thread lifting straps through eye bolts, or attach shackles (not included) to eye bolts for larger lifting straps.
5. With helper on ground to help guide machine, use forklift to lift machine off pallet as shown in **Figure 8**, and place machine in intended location.
6. Remove eye bolts from saw cabinet.

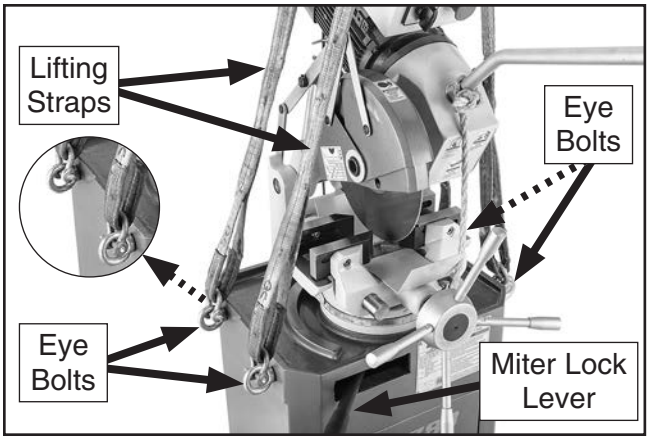

Figure 8. Lifting and placing saw.

Anchoring to Floor

Number of Mounting Holes 4
Diameter of Mounting Hardware..... ½"

Anchoring machinery to the floor prevents tipping or shifting and reduces vibration that may occur during operation, resulting in a machine that runs slightly quieter and feels more solid.

If the machine will be installed in a commercial or workplace setting, or if it is permanently connected (hardwired) to the power supply, local codes may require that it be anchored to the floor.

If not required by any local codes, fastening the machine to the floor is an optional step. If you choose not to do this with your machine, we recommend placing it on machine mounts, as these provide an easy method for leveling and they have vibration-absorbing pads.

Anchoring to Concrete Floors

Lag shield anchors with lag screws (see below) are a popular way to anchor machinery to a concrete floor, because the anchors sit flush with the floor surface, making it easy to unbolt and move the machine later, if needed. However, anytime local codes apply, you MUST follow the anchoring methodology specified by the code.

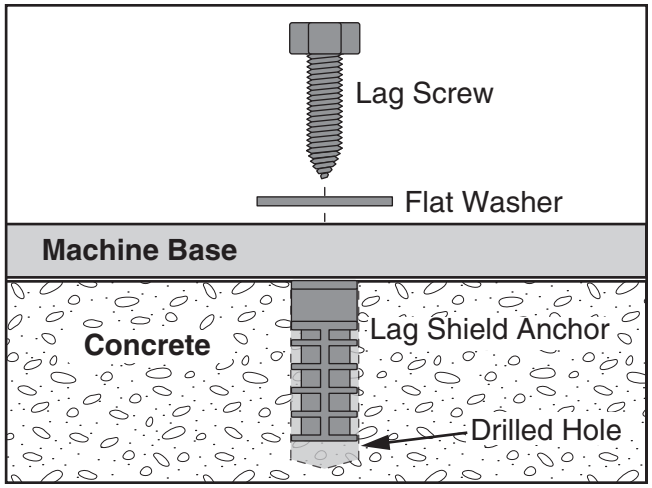

Figure 9. Popular method for anchoring machinery to a concrete floor.

Assembly

The handwheel handles and downfeed arm will need to be attached to the saw before the test run. A blade is *not* included with saw.

Before beginning, refer to Needed for Setup section and gather all applicable items.

To assemble machine:

1. Thread four handwheel handles onto saw vise handwheel hub (see **Figure 10**).

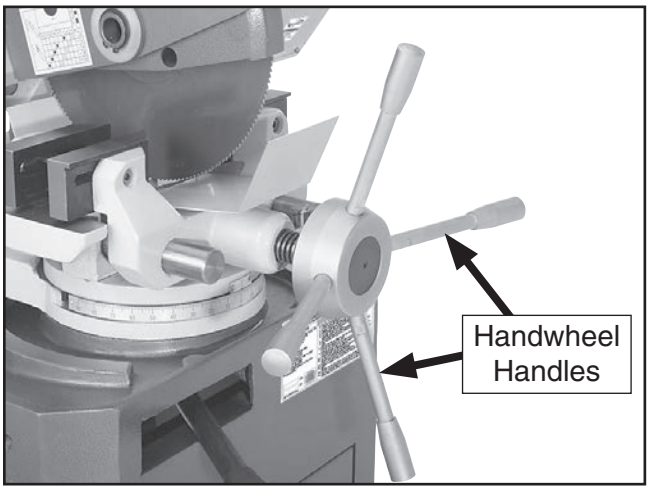

Figure 10. Handwheel handles threaded onto handwheel hub.

2. Verify there is oil in gearbox by lowering headstock and allowing oil to settle for 10 seconds, then checking the oil sight glass (see **Page 16**). Oil level should settle to about half way in sight glass, near red indicator dot.

—If oil *is not* halfway in sight glass, refer to **Gearbox Oil** on **Page 29**.

—If oil is *about* halfway in sight glass, no further action is required. Continue to **Step 3**.

3. Remove temporary headstock plug (see **Page 16**).

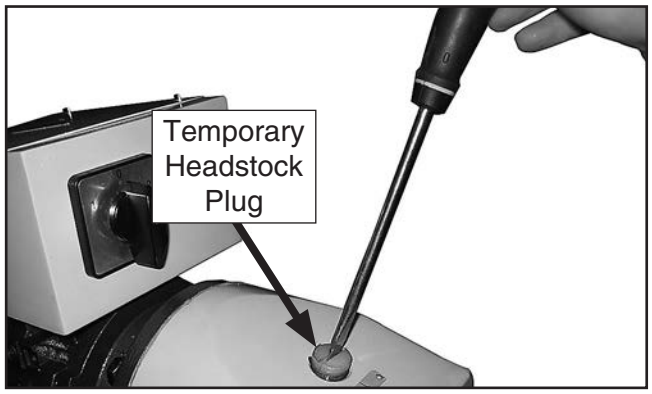

Figure 11. Removing temporary headstock plug.

4. Thread lever arm several turns into headstock until trigger button cord is on top of lever arm, then use adjustable wrench to tighten hex nut against headstock (see **Figure 12**).

5. Connect trigger button cord to right side of control box (see **Figure 12**) and tighten knurled knob.

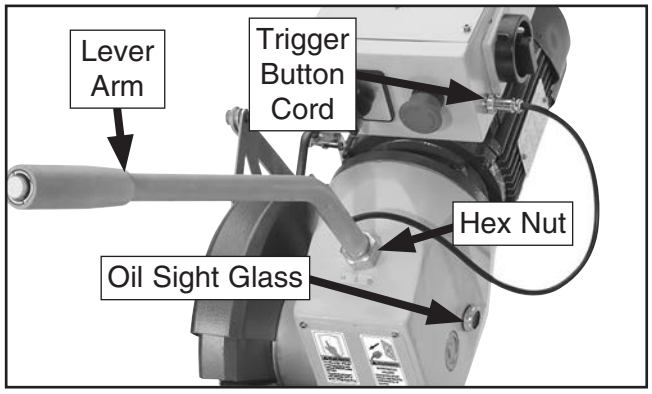

Figure 12. Lever arm and button cord installed.

6. Thread lever cap onto lock lever (see **Figure 13**).

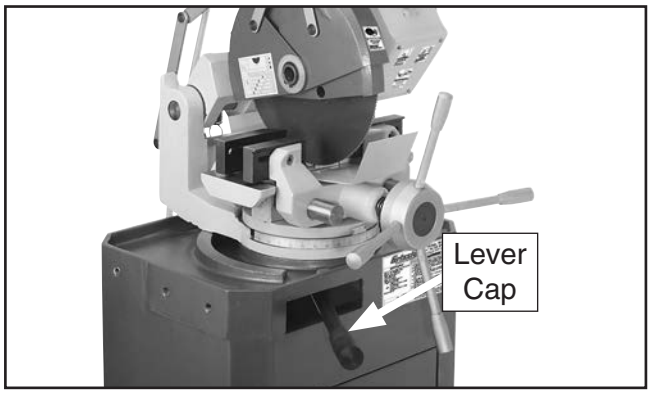

Figure 13. Handle installed on lock lever.

7. Install blade (refer to **Changing Blade** on **Page 20** for blade installation).

Test Run

Once assembly is complete, test run the machine to ensure it is properly connected to power and safety components are functioning correctly.

If you find an unusual problem during the test run, immediately stop the machine, disconnect it from power, and fix the problem BEFORE operating the machine again. The **Troubleshooting** table in the **SERVICE** section of this manual can help.

⚠WARNING

Serious injury or death can result from using this machine BEFORE understanding its controls and related safety information. DO NOT operate, or allow others to operate, machine until the information is understood.

⚠WARNING

DO NOT start machine until all preceding setup instructions have been performed. Operating an improperly set up machine may result in malfunction or unexpected results that can lead to serious injury, death, or machine/property damage.

To test run machine:

1. Clear all setup tools away from machine.

2. Verify gearbox is filled with oil. Refer to **Step 3** of **Assembly** on **Page 15**.

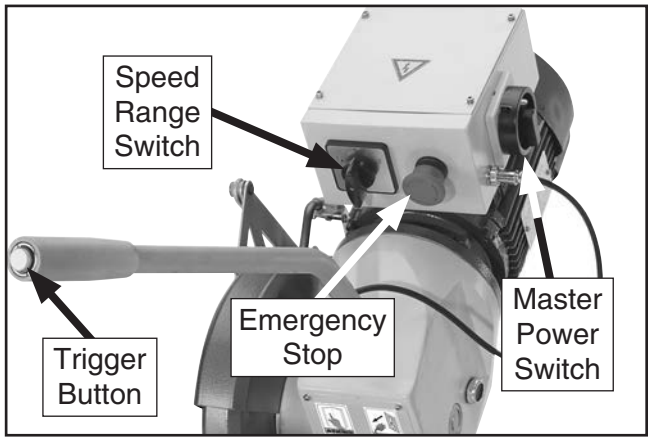

Figure 14. Switch identification.

3. Press Emergency Stop button.

4. Connect machine to power source.

5. Turn master power switch to "1" (ON) position (see **Figure 14**).

6. Turn speed range switch to "1" (see **Figure 14**).

7. Rotate Emergency Stop button (see **Figure 15**) clockwise to reset.

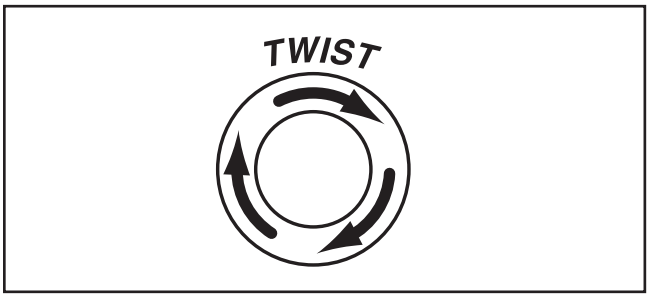

Figure 15. Resetting emergency stop button.

8. Turn cutting fluid valve to open position (see **Figure 2** on **Page 4**).

9. Press trigger button on lever arm. Cutting fluid should begin flowing onto blade.

10. Motor should run smoothly and without unusual problems or noises.

    —Address strange or unusual noises by referring to **Troubleshooting** on **Page 31** for help.

    —Always disconnect machine from power when investigating or correcting potential problems.

11. Turn machine ***OFF*** by releasing trigger button.

12. Press Emergency Stop button, then press trigger button. Saw should not run.

    If saw *does* start, immediately disconnect power to saw. The Emergency Stop button is not working properly. The safety feature *must* work properly before proceeding with regular operations. Call Tech Support for help.

SECTION 4: OPERATIONS

Operation Overview

The purpose of this overview is to provide the novice machine operator with a basic understanding of how the machine is used during operation, so the machine controls/components discussed later in this manual are easier to understand.

Due to the generic nature of this overview, it is **not** intended to be an instructional guide. To learn more about specific operations, read this entire manual, seek additional training from experienced machine operators, and do additional research outside of this manual by reading "how-to" books, trade magazines, or websites.

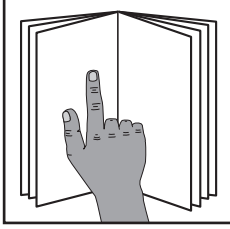

⚠WARNING

To reduce your risk of serious injury, read this entire manual BEFORE using machine.

⚠WARNING

To reduce risk of eye or face injury from flying chips, always wear approved safety glasses and a face shield when operating this machine.



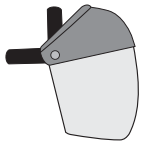

NOTICE

If you are not experienced with this type of machine, WE STRONGLY RECOMMEND that you seek additional training outside of this manual. Read books/magazines or get formal training before beginning any projects. Regardless of the content in this section, Grizzly Industrial will not be held liable for accidents caused by lack of training.

To complete a typical operation, the operator does the following:

1. DISCONNECTS SAW FROM POWER!
2. Checks cutting fluid reservoir.
3. Examines workpiece to make sure it is suitable for cutting.
4. Adjusts miter angle, if necessary, to correct angle of desired cut.
5. Ensures proper blade clearance of vise and table.
6. Adjusts workpiece, then secures it in vise.
7. Connects saw to power.
8. Sets correct blade speed setting.
9. Turns master power switch to "1", then resets Emergency Stop button.
10. Puts on safety glasses and face shield.
11. Presses trigger button on lever arm to start blade and flow of cutting fluid.
12. Lowers blade into workpiece while confirming cutting fluid is flowing onto workpiece.
13. Raises blade and releases trigger button to stop machine.

Adjusting Vise

The Model G0783 features a self-centering vise that provides maximum support, while still providing enough clearance for cutting at a variety of angles.

Each vise jaw is independently adjustable left or right to provide proper blade clearance for the cut.

Tools Needed: **Qty**
Hex Wrench 6mm..... 1

NOTICE

Prior to cutting, jaws must be checked for blade clearance. Failure to do this could cause blade to contact vise during cut, resulting in damage to machine.

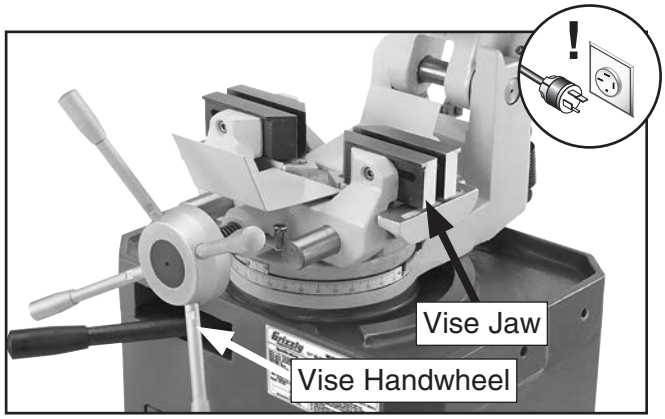

Figure 16. Adjustable vise jaw.

To adjust vise jaws:

1. DISCONNECT SAW FROM POWER!

2. Set cutting angle, as described in **Adjusting Miter Angle** on **Page 20**.

3. Lower saw blade to check vise clearance.

   —If saw blade lowers completely without touching vise jaws, no further adjustments are necessary.

   —If saw blade contacts vise jaws, perform **Steps 4–8** on this page.

4. To adjust each jaw independently, loosen vise jaw cap screw until vise jaw slides freely (see **Figure 17**).

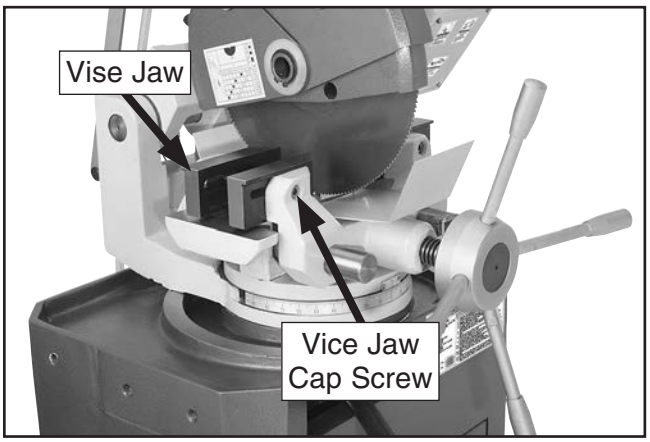

Figure 17. Sliding jaw adjustment hole (1 of 4 vice jaw cap screws).

5. Slide vise jaws away from blade, then lower blade.

6. Position each vise jaw approximately ½" away from blade (see **Figure 18**).

   Note: *At certain angle settings, it may not be possible to set jaw within ½"* of workpiece*. If this is the case, adjust jaw as far as it can go while still being securely clamped.*

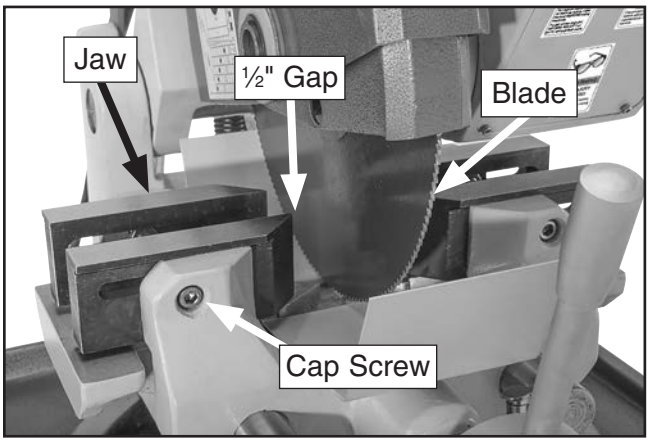

Figure 18. Correct blade clearance setting.

7. Tighten cap screw for each jaw.

8. Turn vise handwheel clockwise until vise jaws clamp workpiece in desired position.

9. Repeat **Step 3** to re-check blade clearance.

Adjusting Miter Angle

The head and column rotate 90° left or right of center for precise angled cuts. The miter scale shows the angle of the blade, and the miter lock lever secures the angle for repeated cuts.

Ensure saw is properly mounted to floor before performing cuts (see **Page 15**), as saw base can shift with larger workpieces.

To set miter angle:

1. DISCONNECT SAW FROM POWER!

2. Release miter lock lever (shown in **Figure 19**).

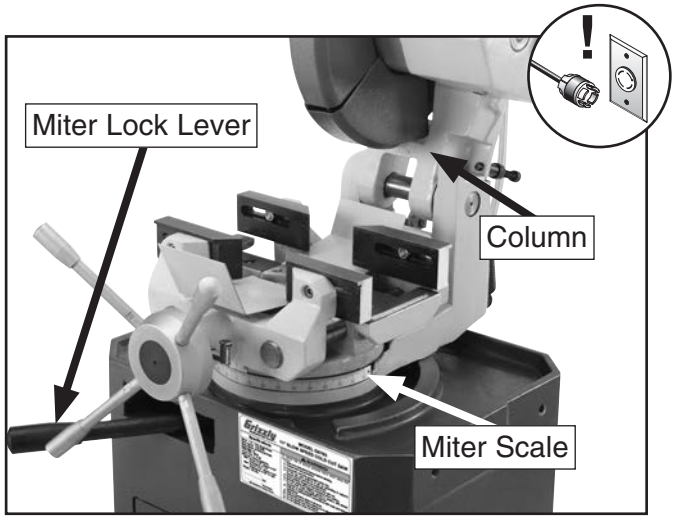

Figure 19. Miter lock lever, column, and miter scale location.

3. Rotate saw headstock to desired angle using miter scale as a guide. Once desired angle is reached, move miter lock lever left to secure setting.

4. Ensure blade clearance by lowering saw blade. If necessary, adjust vise jaw to provide adequate clearance, as outlined in **Adjusting Vise** on **Page 19**.

5. Return saw to upright position.

Changing Blade

The Model G0783 uses an 11" saw blade designed for cutting rectangular, square, and round metal workpieces.

Metal cutting blades should be checked regularly for wear or damage to ensure a high-quality workpiece finish and to determine if replacement is necessary.

Tools Needed:	**Qty**
Hex Wrench 8mm	1
Retaining Ring Pliers	1

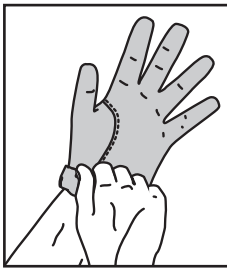

⚠CAUTION

The teeth of saw blades are sharp and can easily cut fingers and hands. Always wear heavy leather gloves when handling saw blades.

To replace blade:

1. DISCONNECT SAW FROM POWER!

2. Disconnect blade guard linkage by removing two cap screws connecting linkage to the base of column neck (see **Figure 20**).

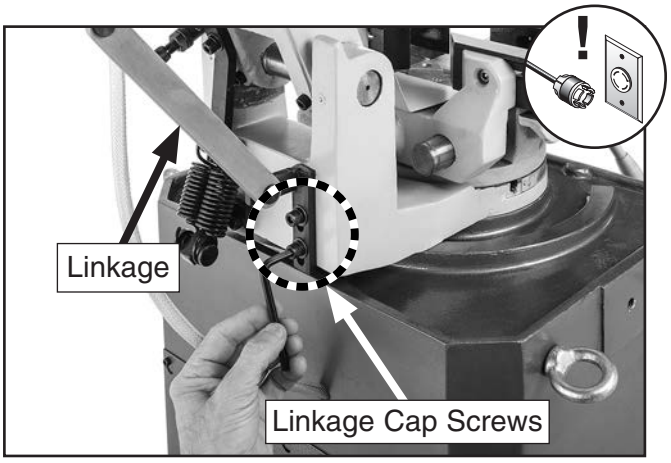

Figure 20. Removing guard linkage.

3. Rotate retractable blade guard and linkage out of the way, as shown in **Figure 21**.

4. Remove arbor cap screw (see **Figure 21**). It features left-hand threads and loosens when turned clockwise.

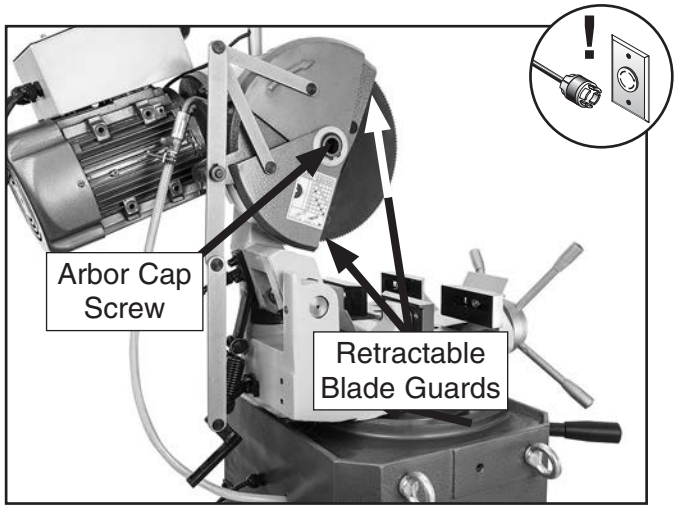

Figure 21. Linkage undone to expose blade.

5. Remove blade and blade flange (see **Figure 22**).

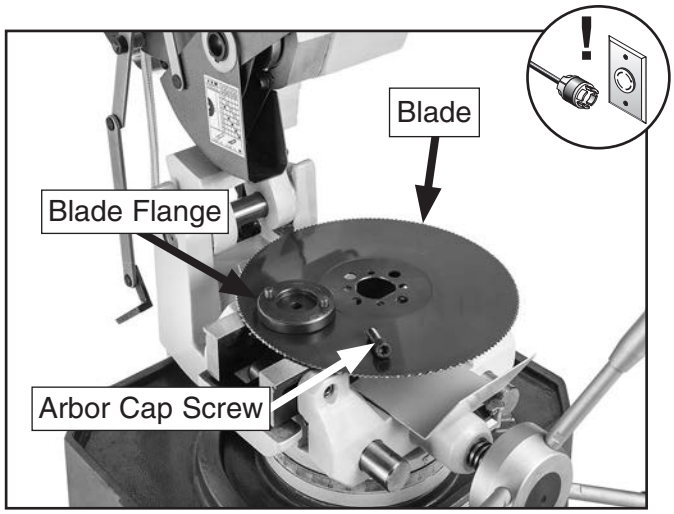

Figure 22. Blade and flange removed.

6. Align and place blade flange on new blade, as shown in **Figure 23**.

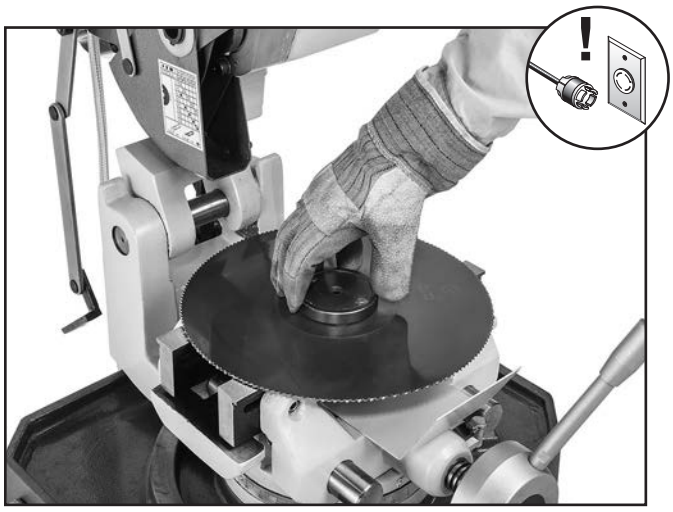

Figure 23. Installing blade flange onto new blade.

7. Align flange pins with holes in saw arbor, and install using hex wrench (see **Figure 24**).

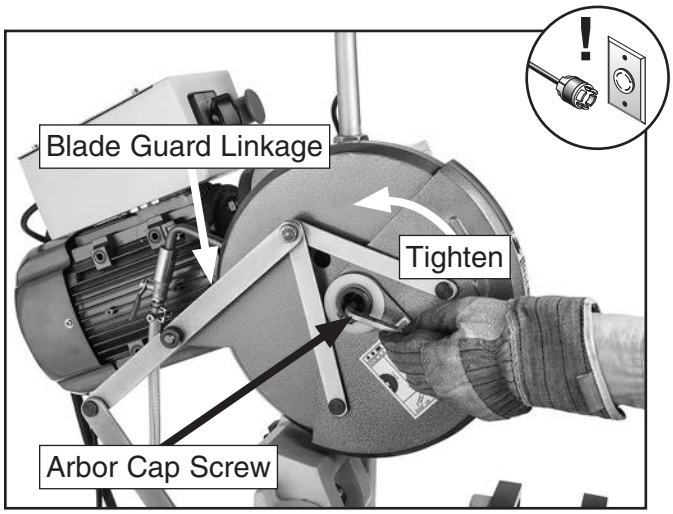

Figure 24. Tightening blade.

8. Lower blade guard, and reconnect blade guard linkage with cap screws removed in **Step 2**.

Adding/Changing Coolant

Coolant is consistently cycled and stored in the base reservoir beneath the pump. For efficient operation and tool longevity, replace coolant when it runs low or becomes dirty from excessive use.

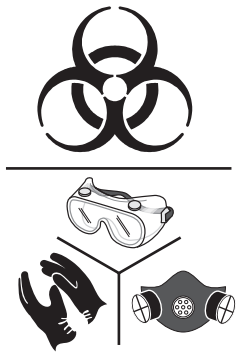

⚠WARNING

BIOLOGICAL & POISON HAZARD!

Use the correct personal protection equipment when handling coolant. Follow federal, state, and fluid manufacturer requirements for proper disposal.

Items Needed:	Qty
Goggles	1
Gloves	1
Respirator	1
Empty 5-Gallon Bucket	1
New Coolant	2 Gallons
Hex Wrench 4mm	1
Phillips Screwdriver	1
Disposable Shop Rags	As Needed

To add/change coolant:

1. DISCONNECT SAW FROM POWER!

2. Remove rear panel from saw base to access cutting fluid reservoir (see **Figure 25**).

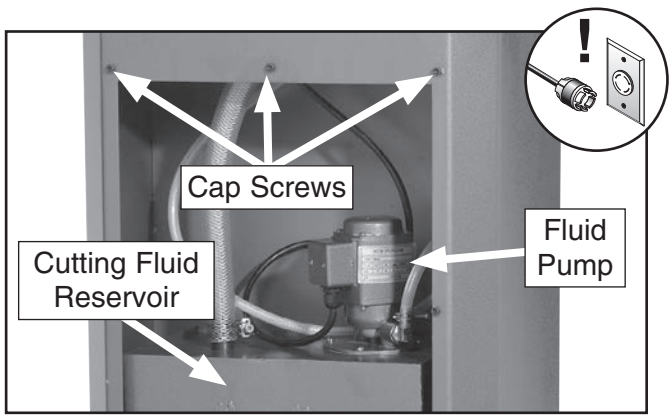

Figure 25. Base with rear panel removed.

3. Wearing protective equipment, slide reservoir out of base cabinet. Fluid pump hose is long enough to allow room to move reservoir away from base.

4. Fill reservoir with 2 gallons of suitable water-based cutting fluid (see **Accessories** on **Page 27**).

   Note: *Refer to fluid manufacturer's specifications for the proper water/oil mix.*

5. Slide reservoir back into base and re-install rear panel.

To drain and clean cutting fluid reservoir:

1. DISCONNECT SAW FROM POWER!

2. Wearing protective equipment, remove reservoir from saw base.

3. Remove screws securing fluid pump to reservoir. Remove fluid pump assembly.

4. Drain and dispose of old coolant and swarf according to federal, state, and fluid manufacturer's requirements.

5. Use a rag to wipe out residual fluid inside reservoir.

6. Clean cutting fluid screen (see **Figure 26**) and fluid pump screen inside fluid reservoir.

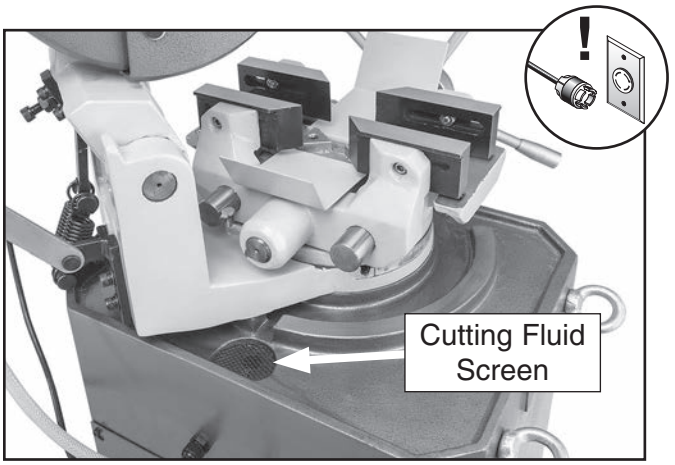

Figure 26. Clear cutting fluid screen of debris.

7. Re-install pump assembly into reservoir and slide reservoir back into saw base. Re-install rear panel.

Blade Terminology

Selecting the right blade for the cut requires an understanding of various blade characteristics.

Blade Terminology

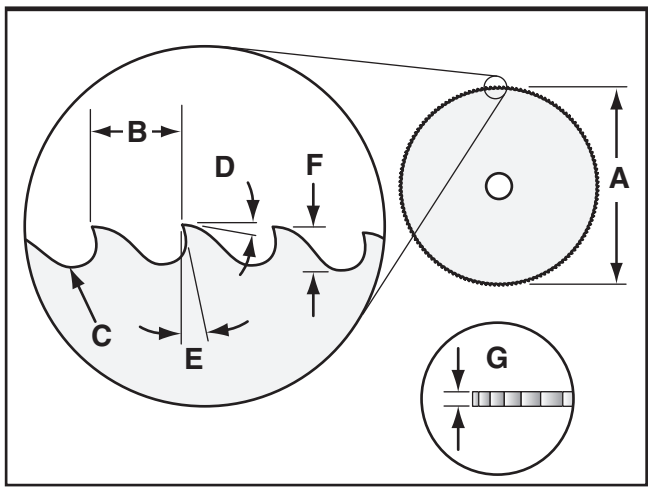

Figure 27. Blade terminology.

A. Blade Size (Diameter): The overall diameter of the blade. The Model G0783 uses 11" blades (see **Page 27**).

B. Pitch: The distance from the tip of one tooth to the tip of the next. Typically given in Teeth Per Inch (TPI)

C. Gullet: The shallow area between the tips of the teeth.

D. Front Rake Angle: The measurement of the angle formed between the tip of the blade tooth and a line tangent to the perimeter of the blade.

E. Rear Rake Angle: The measurement of the angle formed between the face of the tooth and the diameter of the blade.

F. Tooth Depth: The distance from the tip of the tooth to the bottom of the adjacent gullet.

G. Kerf: The width of the cut created by the blade.

Blade Pitch

The most important consideration when selecting a blade for the Model G0783 is blade pitch, which is typically measured in "teeth per inch" (TPI). Proper TPI for any cut depends on the cross-section size and wall thickness of the workpiece.

If the blade pitch is too coarse for the cut, there will be too few teeth making the cut at any given time. This results in broken blade teeth and rough cuts due to excessive strain applied to both the blade and the workpiece (see **Figure 28**). Use a blade pitch that keeps at least three teeth in the workpiece at any time.

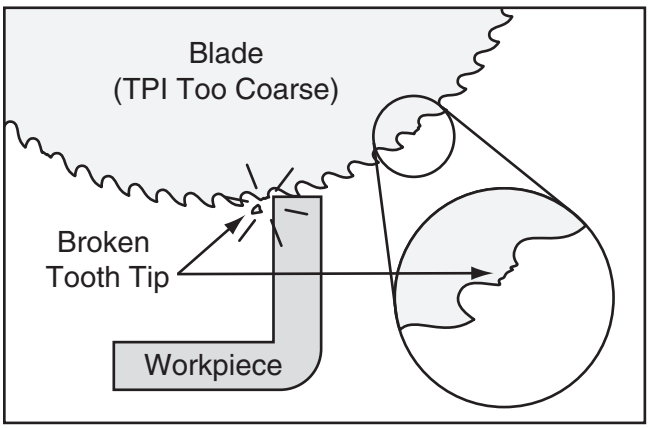

Figure 28. TPI too coarse for workpiece.

Conversely, if the blade pitch is too fine for the cut, teeth will remain in the workpiece and remove more material than the blade gullet can hold. This buildup of chips prevents the teeth from cutting effectively and results in poor cutting efficiency, overheating, and rapidly rounded-off teeth (see **Figure 29**).

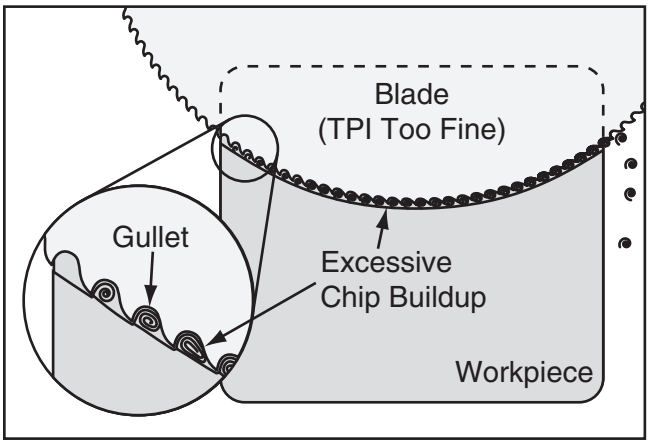

Figure 29. TPI too fine for workpiece.

Similarly, if the workpiece is a soft metal such as aluminum, each tooth will remove more material and rapidly fill the blade gullet. For this reason, use a blade with fewer TPI on soft metals.

An additional problem with an overly fine-pitched blade is that the pressure each tooth exerts on the workpiece is reduced. This limits the cutting ability of the teeth and also results in a buildup of heat and inefficient cuts.

The ideal blade pitch is one that doesn't overload individual teeth (too coarse) and avoids excessive chip buildup in the gullet (too fine) (see **Figure 30**).

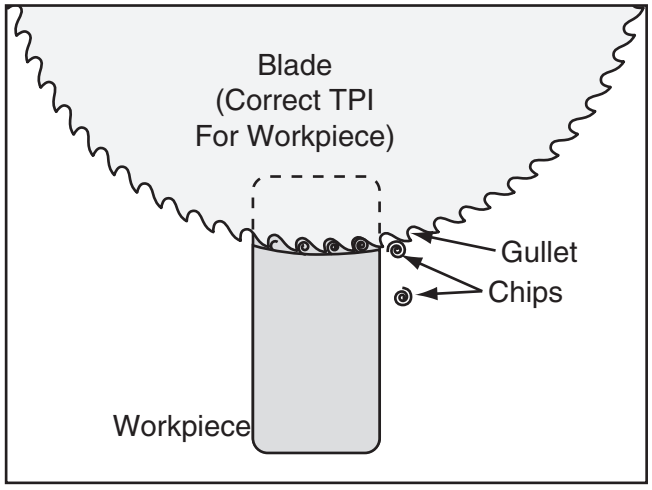

Figure 30. Correct TPI.

Damage to the blade, rough cuts, poor cutting performance, and overheating are all possible signs of improper blade pitch.

If you feel your machine is not functioning properly or performing to your standards, check that the blade pitch is correct for the cut. The procedure that follows is a basic starting point for choosing blade pitch (TPI) for standard HSS blades.

To select correct blade pitch:

1. Measure thickness of workpiece.

   —For solid workpieces, this measurement is length of cut taken from where tooth enters workpiece, sweeps through, and exits workpiece. See (D) on chart in **Figure 31**.

   —For hollow or profiled workpieces, this measurement is wall thickness at its thickest point (Th).

2. Refer to "D or Th" column of blade selection chart in **Figure 31**, and read down to find workpiece thickness you need to cut. Read across to find appropriate Pitch (TPI) for cut. For blade alternatives, see **Accessories** on **Page 27**.

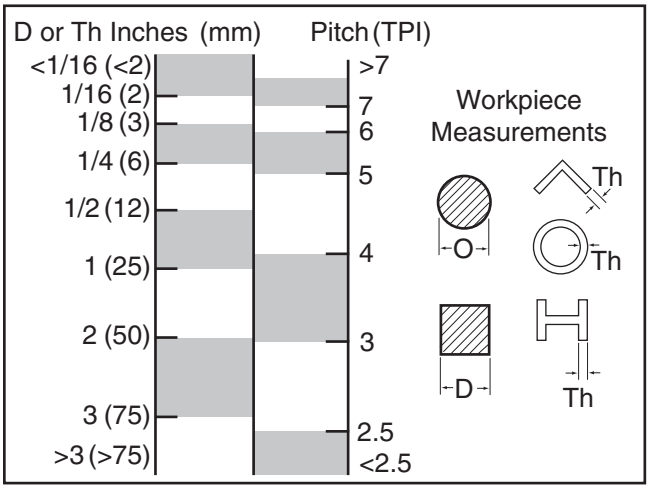

Figure 31. Blade selection chart.



Blade Feed Rate

Blade feed rate refers to the period of time it takes to cut through a workpiece. Feed rate is controlled by the amount of pressure exerted on the handle by the user. Pulling hard on the lever will result in a greater feed rate, whereas only pulling lightly will result in a very slow feed rate.

Cutting with a feed rate that is too slow can result in lengthy, inefficient cuts and in some cases, tooth dulling or overheating. The chips produced by the cut will generally be thin or powdery.

Cutting with a feed rate that is too fast may cause the blade to wander, resulting in cuts that are not straight, and will generate excess heat and dull the blade. The chips produced by the cut will generally be thick and hard. When cutting small or thin-walled workpieces, the edges of the cut may become rough or torn.

Feed rate will vary depending upon the type of material being cut, the proper flow of cutting fluid, and the amount of pressure applied by the user. Practice on a sample workpiece to learn how much pressure is needed for a specific cut.

Blade Speed Selection

The G0783 offers two blade speeds for a variety of cutting needs. Always use proper blade lubrication and adequate cutting pressure to ensure maximum blade life.

The slower "1" (57 RPM) speed setting (see **Controls & Components** on **Page 4**) is most effective for steel alloy (stainless steel) and normal steel applications.

The faster "2" (114 RPM) speed setting (see **Controls & Components** on **Page 4**) is most effective for aluminum and other non-ferrous metals.

Blade Break-in

Proper break-in is important for the cutting performance and longevity of the blade. During the break-in period, only mild pressure should be exerted on the blade (about half of the normal feed pressure for a properly broken-in blade). The duration of the break-in period is determined by the hardness of the material cut. The break-in period is defined in terms of square inches of material cut.

- For hard materials, such as steel, the break-in period is the first 50 square inches of material cut.
- For soft materials, such as aluminum, the break-in period is the first 150 square inches of material cut.

To determine the square inches of a cut, calculate the area of the cross-section of the workpiece. Keep in mind when cutting hollow-section pieces that the area only includes the solid walls of the workpiece. Refer to **Figure 32** to calculate approximate square inches for many typical cuts.

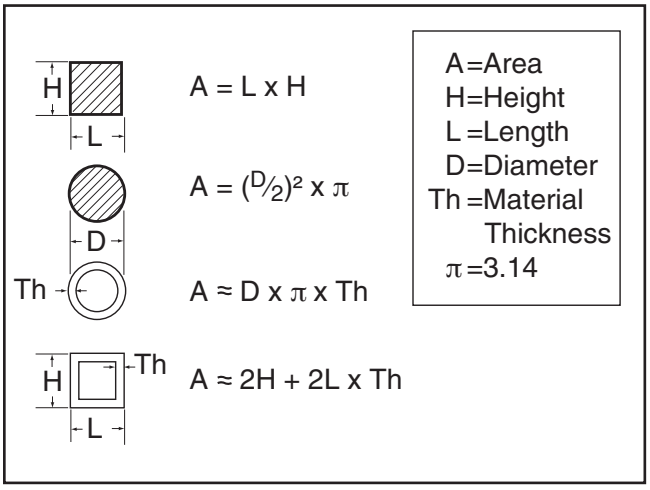

Figure 32. Calculating cut area for break-in.

Chip Inspection Chart

The best method of evaluating the performance of your cutting operation is to inspect the chips that are formed. Refer to the chart below for chip inspection guidelines.

Chip Appearance	Chip Description	Chip Color	Feed Rate	Additional Actions
	Thin & Curled	Silver	***Good***	
	Hard, Thick & Short	Brown or Blue	Decrease	
	Hard, Strong & Thick	Brown or Blue	Decrease	
	Hard, Strong & Thick	Silver or Light Brown	Decrease Slightly	Check Blade Pitch
	Hard & Thin	Silver	Decrease	Check Blade Pitch
	Straight & Thin	Silver	Increase	
	Powdery	Silver	Increase	
	Curled Tight & Thin	Silver	Decrease	Check Blade Pitch

Figure 33. Chip inspection chart.

SECTION 5: ACCESSORIES

⚠WARNING

Installing unapproved accessories may cause machine to malfunction, resulting in serious personal injury or machine damage. To reduce this risk, only install accessories recommended for this machine by Grizzly.

T27132 - Cold Cut Saw Blade 11" x 180T
This 180-tooth, 11" blade, provides a clean, straight, burr-free cut and precise miters for a wide range of metal projects. Features a 1.26" bore diameter.

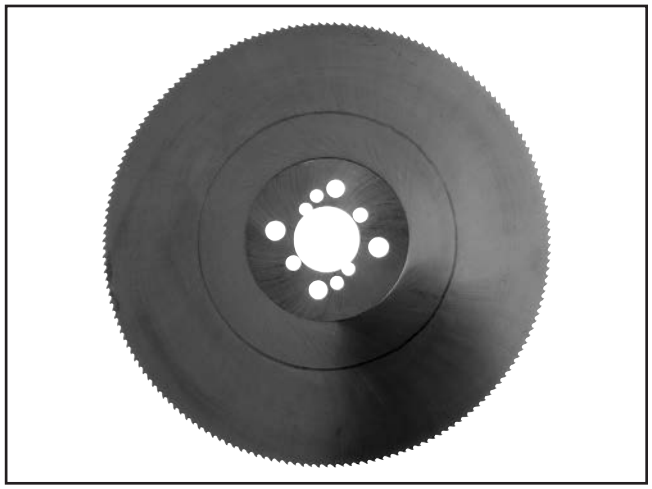

Figure 34. T27132 Replacement blade for G0783.

T20502—Face Shield Crown Protector 7"
T20503—Face Shield Window
T20452—"Kirova" Anti-Reflective S. Glasses

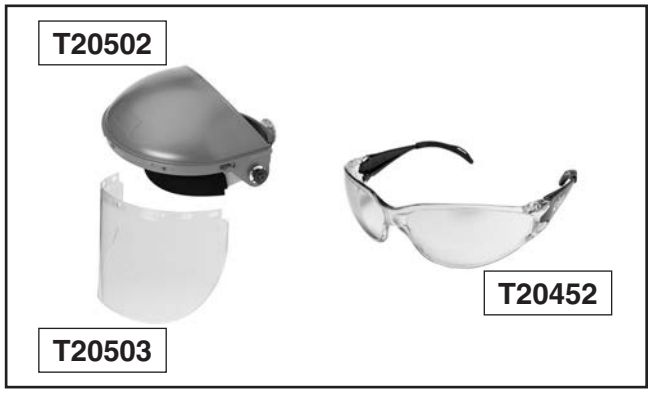

Figure 35. Eye protection assortment.

NOTICE

Refer to our website or latest catalog for additional recommended accessories.

H9240 Rustlick WS5050 Soluble Oil, 1 Gal.
Effective general purpose and heavy-duty chlorinated E.P. additive provides excellent tool life, and helps protect neoprene seals. Can be used on all metals except titanium.



Figure 36. H9240 heavy-duty soluble oil.

D2272—Tilting Roller Stand
Adjusts from 26" to 44", 0°-45°. 150 lb. capacity.
D2273—Single Roller Stand
Adjusts from 26⅝" to 45". 250 lb. capacity.
D2274—5 Roller Stand
Adjusts from 26" to 44⅝", with a 250 lb. capacity. These super heavy-duty roller stands feature convenient hand knobs for fast height adjustment.



Figure 37. Roller Stands.

order online at www.grizzly.com or call 1-800-523-4777

SECTION 6: MAINTENANCE

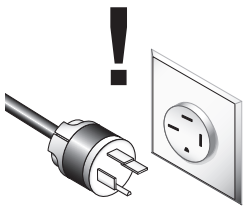

⚠WARNING
Always disconnect power to the machine before performing maintenance. Failure to do this may result in serious personal injury.

Schedule

For optimum performance from your machine, follow this maintenance schedule and refer to any specific instructions given in this section.

Daily Check:
- Loose mounting bolts/screws/nuts.
- Damaged or worn saw blade.
- Coolant level.
- Proper function of blade guard.
- General cleanup to prevent buildup of metal particulate.

Weekly Maintenance:
- Clean machine thoroughly, including coolant tank to remove particulate.
- Clean coolant screens on machine base and fluid reservoir.
- Check/adjust gearbox oil level (see **Page 29**).
- Lubricate vise leadscrew (see **Page 29**).

Monthly Check:
- Check/tighten machine bolts.
- Oil saw hinge pin ball oilers (see **Page 30**).
- Lubricate base pivot (see **Page 30**).

Every Six Months:
- Change gearbox oil (see **Page 29**).

Cleaning & Protecting

Metal chips left on the machine that have been soaked with water-based cutting fluid will invite oxidation and a gummy residue build-up around the moving parts. Use a brush and shop vacuum to remove chips and debris from the working surfaces of the saw. Never blow off the saw with compressed air, as this will force metal chips deep into the mechanisms and may cause injury to yourself or bystanders.

Remove any rust build-up from unpainted cast iron surfaces, and treat with a non-staining lubricant after cleaning. Protect other unpainted cast-iron surfaces with regular applications of ISO 68 oil or other quality metal protectant.

Lubrication

This cold cut saw requires regular lubrication to maintain smooth movement and ensure long-lasting operation.

An essential part of lubrication is cleaning the components before lubricating them. Clean all exterior components in this section with mineral spirits, shop rags, and brushes *before* lubricating.

This step is critical because grime and chips build up on lubricated components over time, which makes them hard to move.

DISCONNECT MACHINE FROM POWER BEFORE PERFORMING LUBRICATION!

Vise Leadscrew

Lube Type...Model T23962 or ISO 68 Equivalent
Lube Amount.....Fill Cup
Lubrication Frequency.....Weekly

To lubricate vise leadscrew:

1. DISCONNECT MACHINE FROM POWER!

2. Using vise handwheel, close vise jaws.

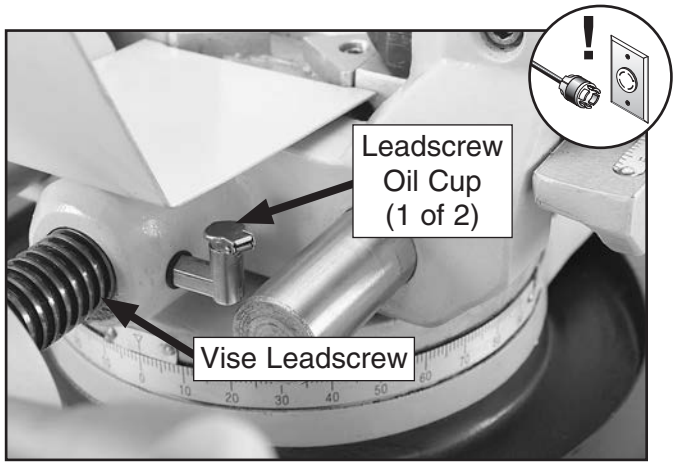

Figure 38. Oil cup leadscrew lubrication.

3. Open each oil cup lid, and fill with ISO 68 or equivalent oil, then move vise through its full range of motion several times to disperse oil along leadscrew.

4. Wipe away any excess oil.

   Note: *For best performance, periodically clean leadscrew thoroughly with mineral spirits or other degreaser and then relubricate.*

Gearbox Oil

Lube Type...Model T23962 or ISO 68 Equivalent
Lube Amount.....½ Liter
Check/Add Frequency.....Weekly
Change Frequency.....Every 6 Months

Items Needed	Qty
Hex Wrench 8mm	1
Open-End Wrench ⅞"	1
Drain Pan	1
Funnel	1
Additional Person	1

To add/change gearbox oil:

1. DISCONNECT SAW FROM POWER!

2. Raise saw to upmost position, and remove lever arm to access oil fill hole to allow oil to drain more freely.

3. Place oil drain pan beneath saw gearbox, and remove oil drain plug, located on bottom side of gearbox (see **Figure 39**).

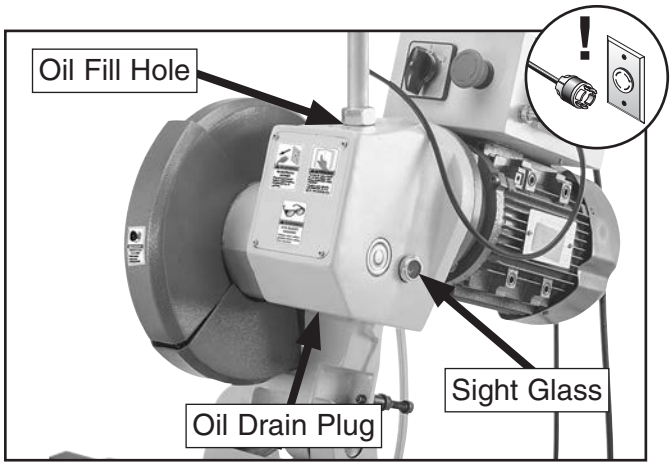

Figure 39. Oil fill and drain plug locations.

4. Hold drain pan under drain plug, then tilt saw gearbox forward, allowing oil to drain out.

5. Have an assistant hold headstock in place, and replace drain plug.

6. Insert funnel into fill hole. Add approximately ½-liter of ISO 68 or equivalent oil until oil level is halfway in sight glass. Wait 10 seconds to allow oil to settle in sight glass before taking a reading.

7. Wipe away any excess oil and re-install lever arm.

Hinge-Pin Ball Oilers

Lube Type...Model T23963 or ISO 32 Equivalent
Lube Amount.....1–2 Pumps
Lubrication Frequency.....8 hrs. of Operation

Proper lubrication of the hinge-pin ball oilers shown in **Figure 40**, is done with a pump-type oil can that has a tip wide enough to seal the ball oil inlet. We *do not* recommend using metal needle or lance-type tips, as they can push the ball too far into the oiler, break the spring seat, and lodge the ball in the oil galley.

Push the oil can nozzle tip against each ball oiler, and pump oil can twice. If you see sludge and contaminants coming out of the lubrication area, continue pumping oil can until the oil runs clear, and wipe away any excess oil.

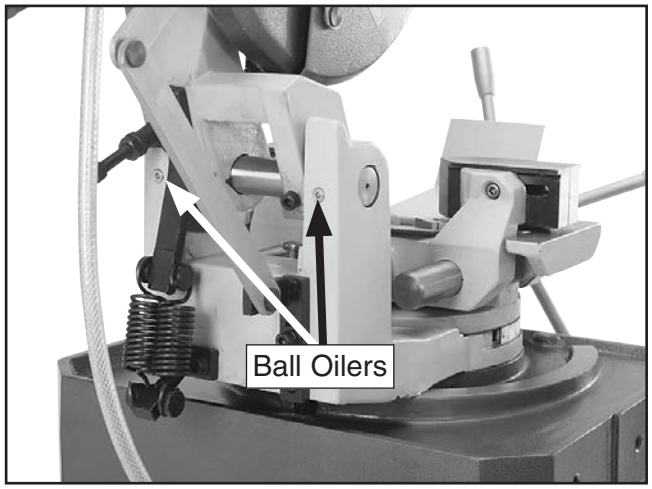

Figure 40. Location of hinge-pin ball oilers.

Base Pivot

Lube Type.....Model T23963 ISO 32 Equivalent
Lube Amount.....Thin Coat
Lubrication Frequency.....8 hrs. of Operation

Proper lubrication around the saw base pivot allows for smooth rotation when adjusting the miter angle.

If base pivot movement becomes difficult, apply a small amount of oil to openings beside the miter angle gauge and the pivot channel behind the vise (see **Figure 41**). Rotate the base back-and-forth several times to distribute oil evenly.

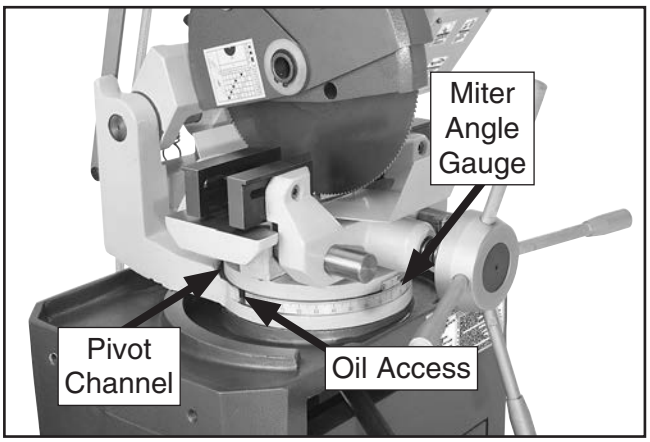

Figure 41. Base pivot oil locations.

SECTION 7: SERVICE

Review the troubleshooting procedures in this section if a problem develops with your machine. If you need replacement parts or additional help with a procedure, call our Technical Support. **Note:** *Please gather the serial number and manufacture date of your machine before calling.*

Troubleshooting

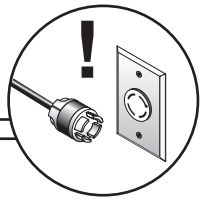

Motor & Electrical

Symptom	Possible Cause	Possible Solution
Machine does not start or a breaker trips.	1. Emergency stop button depressed/at fault. 2. Plug/receptacle at fault/wired wrong. 3. Incorrect power supply voltage or circuit size. 4. Power supply circuit breaker tripped or fuse blown. 5. Wiring open/has high resistance. 6. Capacitor at fault. 7. Master power switch at fault. 8. Motor at fault.	1. Rotate button head to reset. Replace. 2. Test for good contacts; correct the wiring (**Page 35**). 3. Ensure correct power supply voltage and circuit size. 4. Ensure circuit is sized correctly and free of shorts. Reset breaker or replace fuse. 5. Check/fix broken, disconnected, or corroded wires. 6. Test; check/fix broken wiring; replace capacitor. 7. Test/replace switch. 8. Test/repair/replace.
Machine stalls or is underpowered.	1. Workpiece crooked; vise jaws are loose or incorrectly adjusted. 2. Machine undersized for task. 3. Wrong workpiece material. 4. Dull blade. 5. Plug/receptacle at fault. 6. Motor wired incorrectly. 7. Motor overheated. 8. Contactor not energized. 9. Motor bearings at fault. 10. Gearbox at fault.	1. Straighten or replace workpiece/adjust vise jaws to avoid workpiece binding saw blade. 2. Use correct blade; reduce feed rate/depth of cut; use more coolant if possible (**Page 22**). 3. Use correct type/size of metal for cutting operation. 4. Sharpen/replace blade (**Page 20**). 5. Test for good contacts/correct wiring (**Page 35**). 6. Wire motor correctly (**Page 35**). 7. Clean motor, let cool, and reduce workload. 8. Test all legs of contactor; repair/replace. 9. Test/repair/replace. 10. Replace broken or slipping gears.
Machine has vibration or noisy operation.	1. Workpiece loose. 2. Machine incorrectly mounted to floor. 3. Motor or component loose. 4. Motor fan rubbing on fan cover. 5. Motor bearings at fault. 6. Gearbox at fault.	1. Use correct vise locations and re-clamp workpiece. 2. Tighten mounting bolts; relocate/shim machine. 3. Inspect/replace damaged bolts/nuts, and re-tighten with thread locking fluid. 4. Fix/replace fan cover; replace loose/damaged fan. 5. Test by rotating shaft; rotational grinding/loose shaft requires bearing replacement. 6. Replace broken or slipping gears.

Cutting Operations

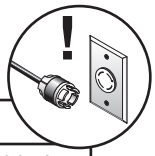

Symptom	Possible Cause	Possible Solution
Premature blade wear.	1. Blade not worn in correctly. 2. Cutting pressure too high. 3. Cutting pressure too low. 4. Incorrect blade for material type. 5. Inadequate blade lubrication.	1. Follow correct procedure for breaking in new blade (**Page 25**). 2. Reduce cutting pressure. 3. Increase cutting pressure. 4. Choose correct blade for material type. 5. Check level of cutting fluid (**Page 22**), valve position, fluid screens, functionality of pump, and flow of hose.
Teeth breaking or chipping.	1. Blade not worn in correctly. 2. Material type too hard, incorrectly shaped, or has flaws. 3. Wrong tooth pitch/profile. 4. Workpiece not secured in vise. 5. Vibrations in machine causing blade to "bounce" on workpiece. 6. Cutting pressure too high. 7. Teeth touching workpiece before cut begins. 8. Inadequate blade lubrication.	1. Follow correct procedure for breaking in new blade (**Page 25**). 2. Decrease cutting pressure, choose correct blade for material type; ensure workpiece does not contain flaws. 3. Choose correct blade for material type (**Page 20**). 4. Check vice, jaws, and clamping pressure (**Page 19**). 5. Find/correct source of machine vibration. 6. Reduce cutting pressure. 7. Do not allow blade teeth to touch workpiece during start-up. 8. Check level of cutting fluid (**Page 22**), valve position, functionality of pump, and flow of hose.
Vibration when cutting.	1. Machine undersized for task. 2. Workpiece not secured in vise. 3. Wrong tooth pitch/profile. 4. Cross section of workpiece is too large. 5. Inadequate blade lubrication.	1. Use correct, sharp blade; reduce cutting rate/depth of cut; use more coolant if possible (**Page 20**). 2. Check vice, jaws, and clamping pressure (**Page 19**). 3. Use correct blade for workpiece (**Page 20**). 4. Adhere to maximum cutting capacities for this machine (**Page 6**). 5. Check level of cutting fluid (**Page 22**), valve position, functionality of pump, and flow of hose.
Cut is not straight.	1. Workpiece is not secured in vise. 2. Cutting pressure too high. 3. Debris on vise. 4. Cutting angle not properly set. 5. Dull/warped blade.	1. Check vice, jaws, and clamping pressure (**Page 19**). 2. Reduce cutting pressure. 3. Clean vise. 4. Set cutting angle according to scale (**Page 20**). 5. Sharpen/replace blade (**Page 20**).
Blade sticks in cut.	1. Cutting pressure too high. 2. Waste material/cutting fluid buildup on blade. 3. Inadequate blade lubrication.	1. Reduce cutting pressure. 2. Clean blade, replace cutting fluid regularly (**Page 22**). 3. Check level of cutting fluid (**Page 22**), valve position, functionality of pump, and flow of hose.
Blade breaks.	1. Material type too hard, incorrectly shaped, or has flaws. 2. Cutting pressure too high. 3. Wrong tooth pitch/profile. 4. Blade not worn in correctly.	1. Decrease cutting pressure, choose correct blade for material type; ensure workpiece does not contain flaws. 2. Reduce cutting pressure; replace blade. 3. Use correct blade for workpiece (**Page 20**). 4. Follow correct procedure for breaking in new blade (**Page 25**).

Adjusting Miter Lock Lever

The miter lock lever (see **Figure 42**) ensures the swiveling saw base remains locked at a desired angle during the cut.

Lock lever adjustment components can be accessed by removing the rear access panel or through the front storage compartment.

Tools Needed:	**Qty**
Hex Wrench 6mm	1
Wrench or Socket 14mm	1

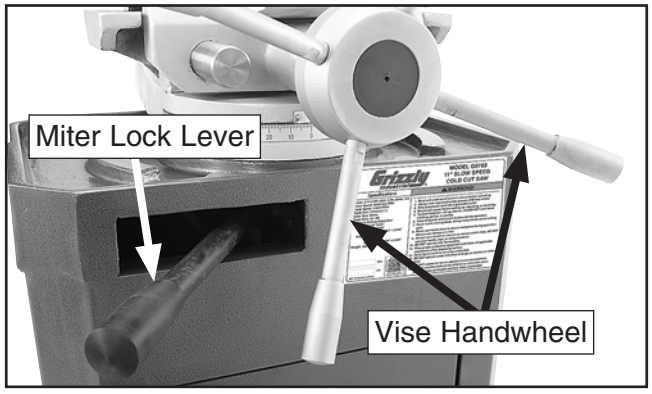

Figure 42. Miter lock lever location

To adjust lock lever:

1. DISCONNECT SAW FROM POWER!

2. Loosen cap screws securing lock lever arm to lock bolt shown in **Figure 43**.

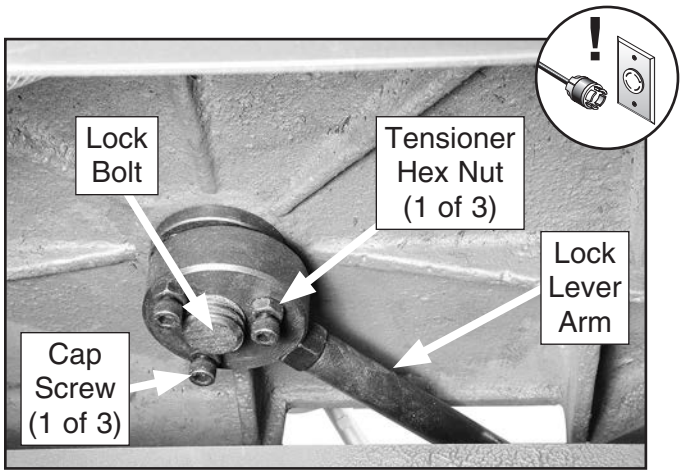

Figure 43. Miter lock lever adjustment components.

3. Rotate lock lever left or right, as needed. Re-tighten cap screws and tensioner hex nuts, and then test lock lever range of movement.

   Note: *Check lock lever clearance to ensure it does not interfere with the vise handwheel rotation when fully locked.*

SECTION 8: WIRING

These pages are current at the time of printing. However, in the spirit of improvement, we may make changes to the electrical systems of future machines. Compare the manufacture date of your machine to the one stated in this manual, and study this section carefully.

If there are differences between your machine and what is shown in this section, call Technical Support at (570) 546-9663 for assistance BEFORE making any changes to the wiring on your machine. An updated wiring diagram may be available. **Note:** *Please gather the serial number and manufacture date of your machine before calling. This information can be found on the main machine label.*

⚠WARNING
Wiring Safety Instructions

SHOCK HAZARD. Working on wiring that is connected to a power source is extremely dangerous. Touching electrified parts will result in personal injury including but not limited to severe burns, electrocution, or death. Disconnect the power from the machine before servicing electrical components!

MODIFICATIONS. Modifying the wiring beyond what is shown in the diagram may lead to unpredictable results, including serious injury or fire. This includes the installation of unapproved aftermarket parts.

WIRE CONNECTIONS. All connections must be tight to prevent wires from loosening during machine operation. Double-check all wires disconnected or connected during any wiring task to ensure tight connections.

CIRCUIT REQUIREMENTS. You MUST follow the requirements at the beginning of this manual when connecting your machine to a power source.

WIRE/COMPONENT DAMAGE. Damaged wires or components increase the risk of serious personal injury, fire, or machine damage. If you notice that any wires or components are damaged while performing a wiring task, replace those wires or components.

MOTOR WIRING. The motor wiring shown in these diagrams is current at the time of printing but may not match your machine. If you find this to be the case, use the wiring diagram inside the motor junction box.

CAPACITORS/INVERTERS. Some capacitors and power inverters store an electrical charge for up to 10 minutes after being disconnected from the power source. To reduce the risk of being shocked, wait at least this long before working on capacitors.

EXPERIENCING DIFFICULTIES. If you are experiencing difficulties understanding the information included in this section, contact our Technical Support at (570) 546-9663.

NOTICE

The photos and diagrams included in this section are best viewed in color. You can view these pages in color at www.grizzly.com.

COLOR KEY

BLACK	Bk	BLUE	Bl	YELLOW	Yl	LIGHT BLUE	Lb
WHITE	Wt	BROWN	Br	YELLOW GREEN	Yg	BLUE WHITE	Bw
GREEN	Gn	GRAY	Gy	PURPLE	Pu	TURQUOISE	Tu
RED	Rd	ORANGE	Or	PINK	Pk		

Wiring Overview

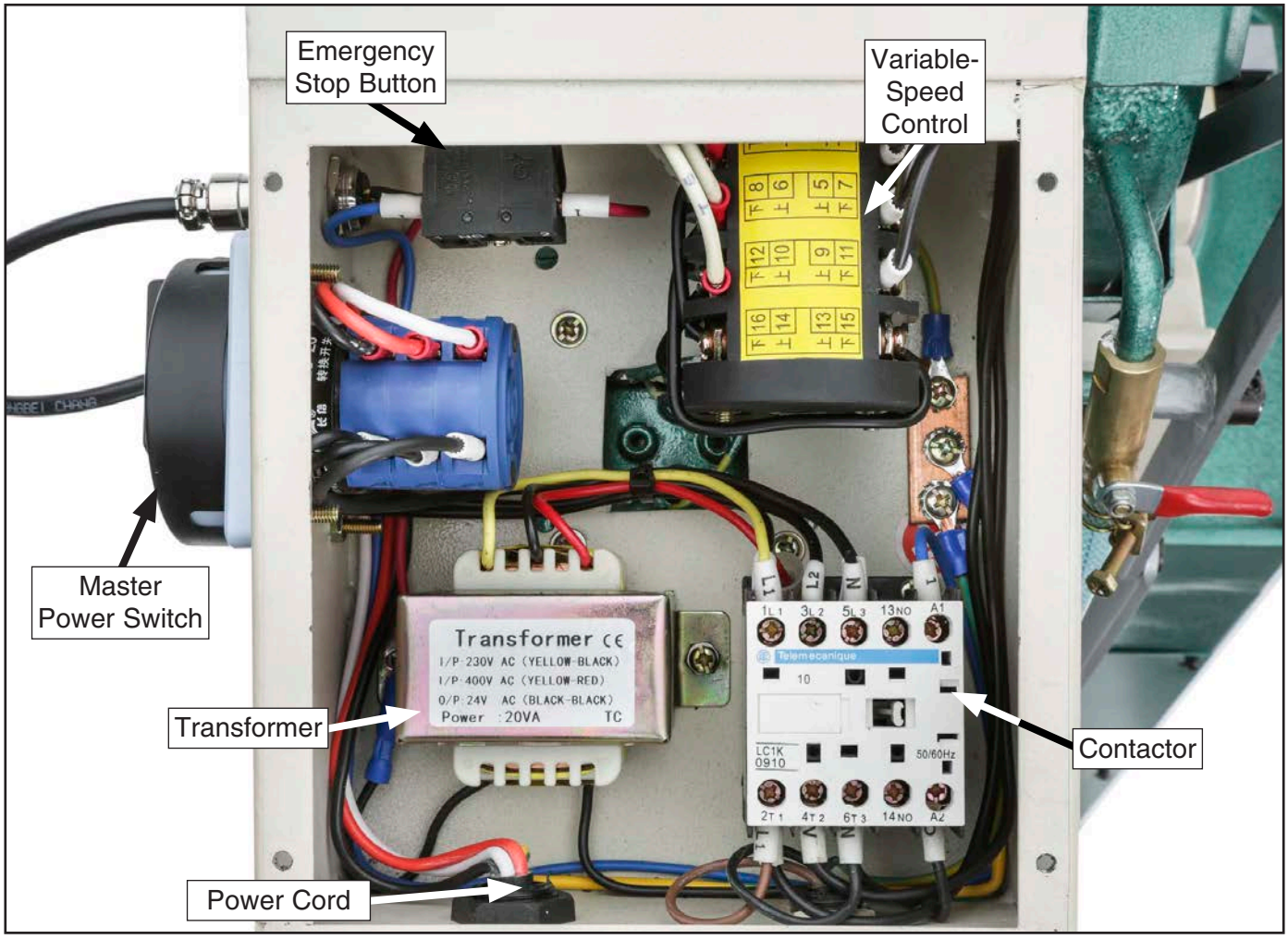

Figure 46. G0783 electrical components.

Wiring Diagram

NOTICE

The motor wiring shown here is current at the time of printing, but it may not match your machine. Always use the wiring diagram inside the motor junction box.

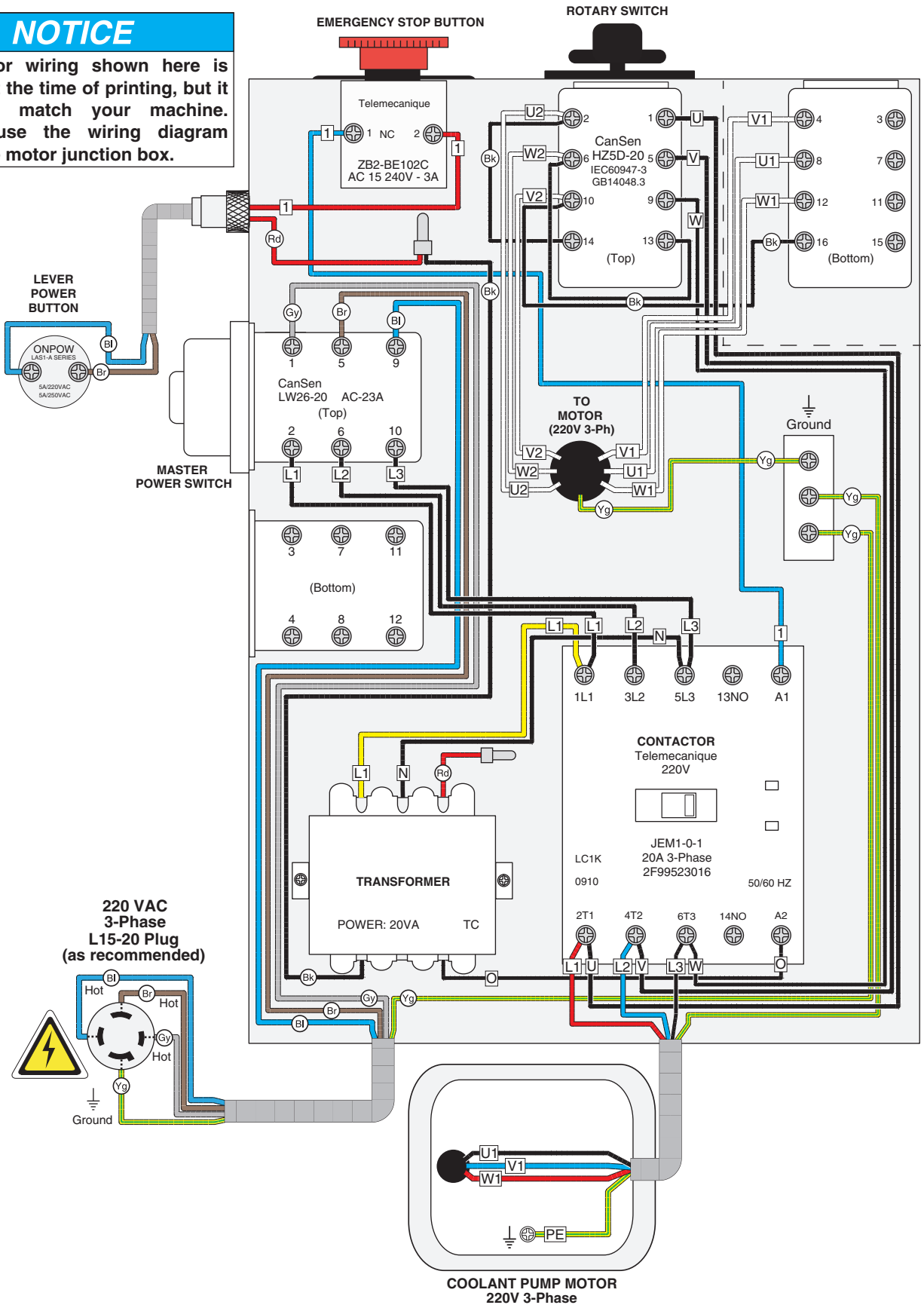

STOP *READ ELECTRICAL SAFETY ON PAGE 34!*

SECTION 9: PARTS

Base

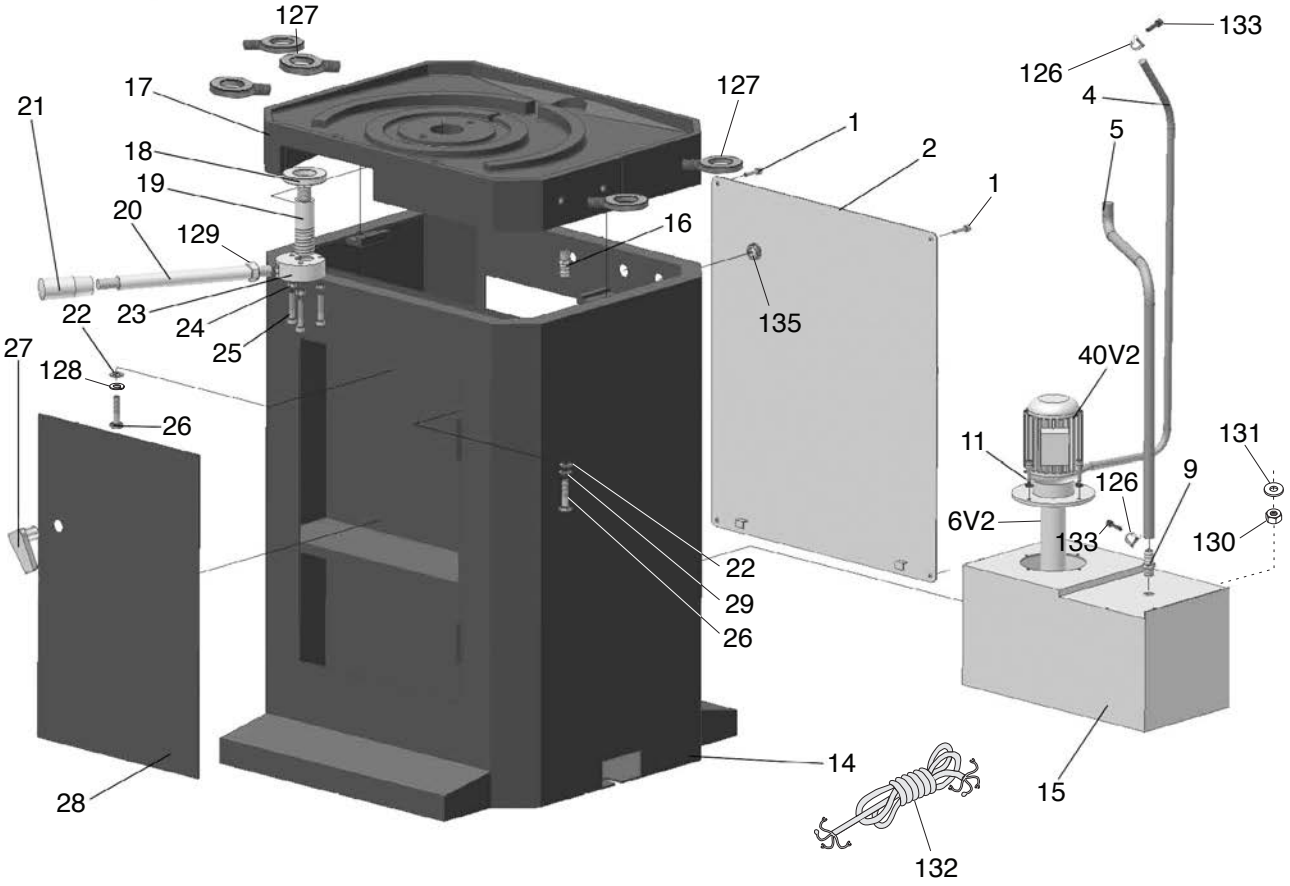

REF	PART #	DESCRIPTION
1	P0783001	CAP SCREW M5-.8 X 8
2	P0783002	REAR COVER
4	P0783004	COOLANT HOSE OUTFLOW 1/2" X 60"
5	P0783005	COOLANT HOSE INFLOW 1-1/2" X 18"
6V2	P0783006V2	COOLANT PICKUP TUBE V2.10.17
9	P0783009	HOSE FITTING M24-2 X 12, L43 BRASS
11	P0783011	PHLP HD SCR M5-.8 X 6
14	P0783014	MACHINE STAND
15	P0783015	COOLANT TANK 2-GALLON
16	P0783016	STRAINER 60MM
17	P0783017	STAND TOP PLATE
18	P0783018	SPACER 34 ID X 64 OD
19	P0783019	STUD-UDE M26-2.5 X 100
20	P0783020	LOCK LEVER M16-2 X 20
21	P0783021	LOCK LEVER HANDLE 85L M16-2
22	P0783022	FLAT WASHER 10MM
23	P0783023	TENSION NUT M26-2.5

REF	PART #	DESCRIPTION
24	P0783024	HEX NUT M8-1.25
25	P0783025	CAP SCREW M8-1.25 X 40
26	P0783026	CAP SCREW M10-1.5 X 45
27	P0783027	DOOR LATCH
28	P0783028	FRONT ACCESS DOOR
29	P0783029	LOCK WASHER 10MM
40V2	P0783040V2	PUMP MOTOR 40W 220V 3-PH ASSY V2.10.17
126	P0783126	COOLANT HOSE CLAMP 1/2"
127	P0783127	EYE BOLT 32MM, M12-1.75 X 22
128	P0783128	LOCK WASHER 10MM
129	P0783129	HEX NUT M16-2
130	P0783130	HEX NUT M24-2
131	P0783131	FLAT WASHER 24MM
132	P0783132	POWER CORD 20G 3W 72" NO PLUG
133	P0783133	PHLP HD SCR M5-.8 X 35
135	P0783135	STRAIN RELIEF TYPE-3 PG20

Please Note: *We do our best to stock replacement parts whenever possible, but we cannot guarantee that all parts shown here are available for purchase. Call* ***(800) 523-4777*** *or visit our online parts store at* ***www.grizzly.com*** *to check for availability.*

BUY PARTS ONLINE AT GRIZZLY.COM!
Scan QR code to visit our Parts Store.

Vise

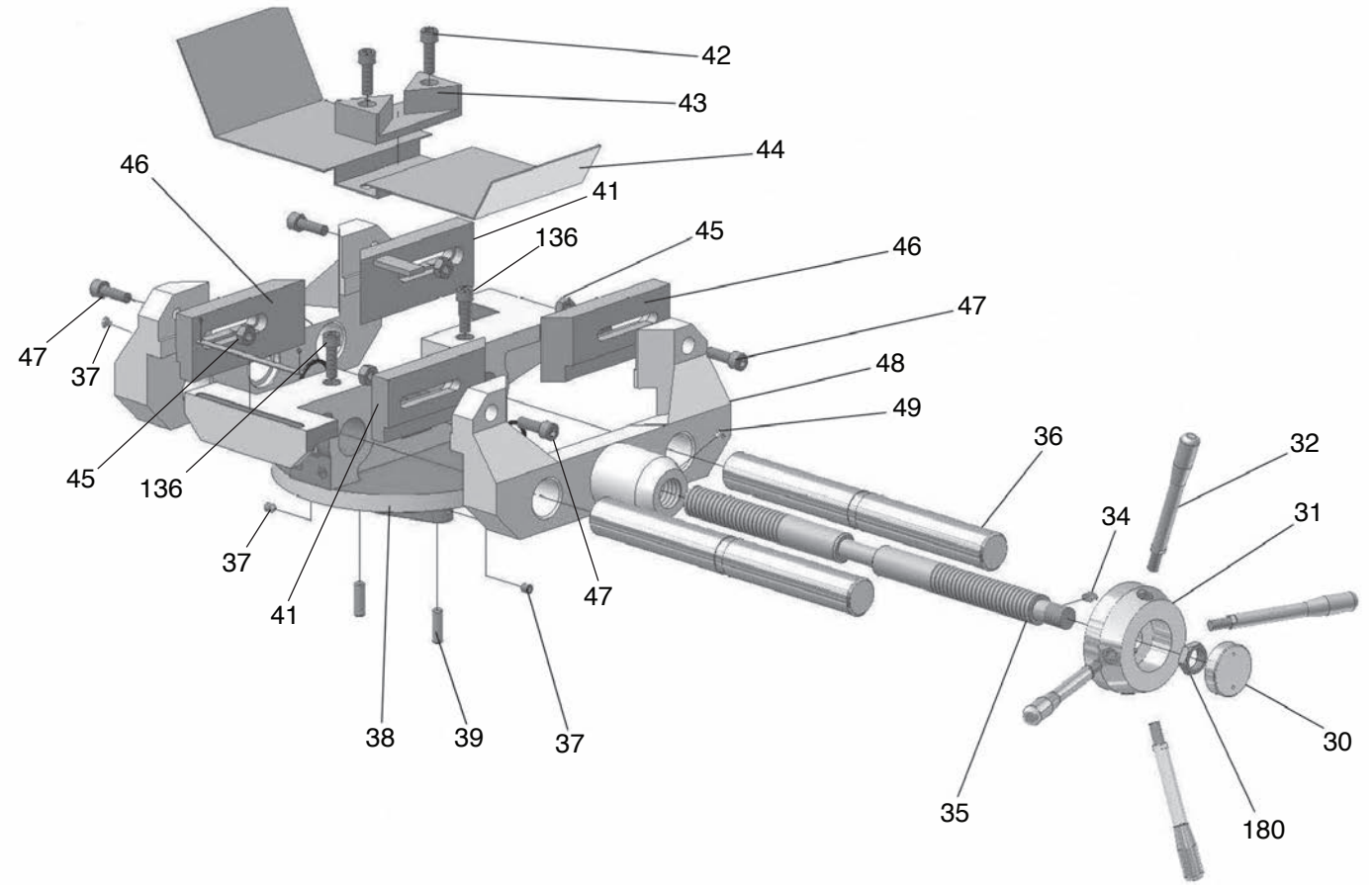

REF	PART #	DESCRIPTION
30	P0783030	VISE HANDLE HUB COVER
31	P0783031	HANDLE HUB
32	P0783032	LEVER HANDLE 160L M10-1.5 X 10
34	P0783034	KEY 6 X 6 X 10
35	P0783035	LEADSCREW
36	P0783036	GUIDE BAR
37	P0783037	SET SCREW M8-1.25 X 10
38	P0783038	VISE BASE
39	P0783039	ROLL PIN 10 X 30
41	P0783041	VISE JAW LEFT BEVEL

REF	PART #	DESCRIPTION
42	P0783042	CAP SCREW M6-1 X 24
43	P0783043	SPLASH GUARD SUPPORT
44	P0783044	SPLASH GUARD
45	P0783045	HEX NUT M8-1.25
46	P0783046	VISE JAW RIGHT BEVEL
47	P0783047	CAP SCREW M8-1.25 X 30
48	P0783048	VISE BODY
49	P0783049	OIL CUP M8-1.25 X 7
136	P0783136	CAP SCREW M8-1.25 X 12
180	P0783180	HEX NUT M20-2.5

BUY PARTS ONLINE AT GRIZZLY.COM!
Scan QR code to visit our Parts Store.

Motor

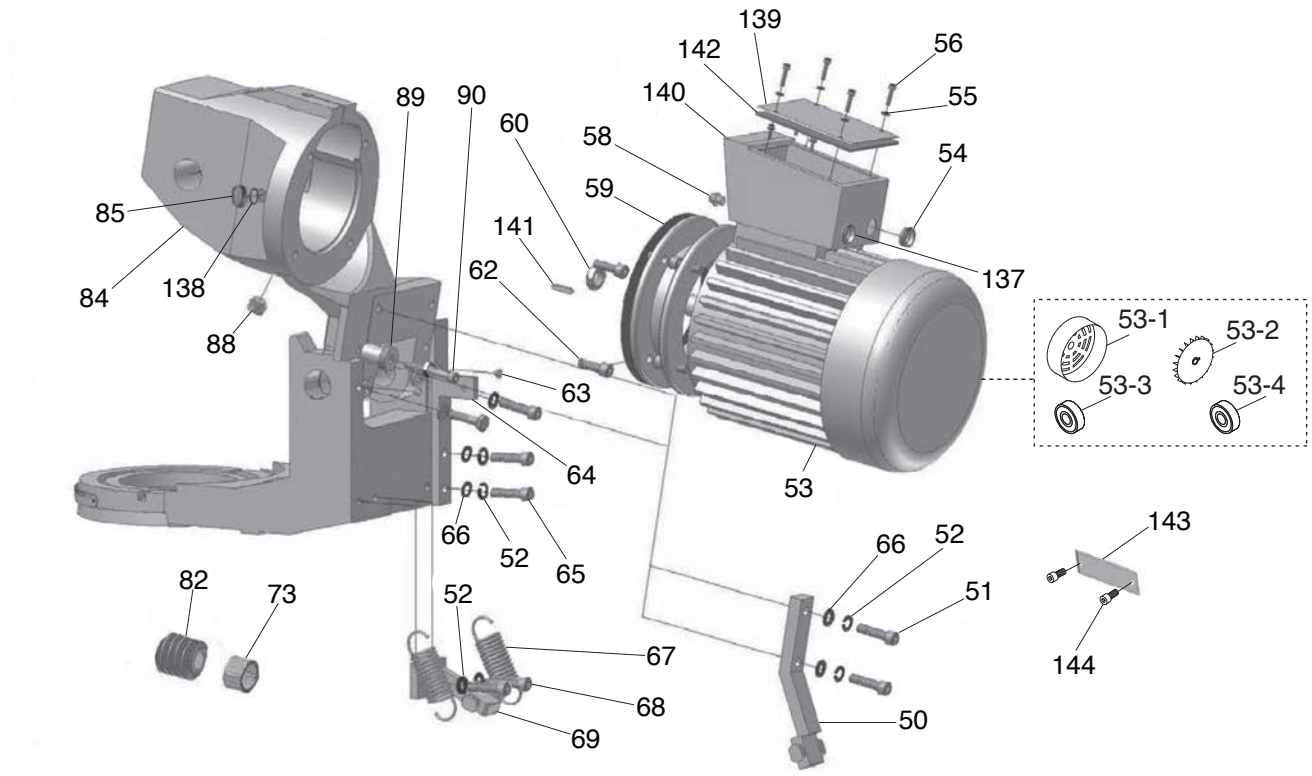

REF	PART #	DESCRIPTION
50	P0783050	SPRING ARM (UPPER)
51	P0783051	CAP SCREW M8-1.25 X 25
52	P0783052	LOCK WASHER 8MM
53	P0783053	MOTOR 2.7HP 220V 3-PH
53-1	P0783053-1	MOTOR FAN COVER
53-2	P0783053-2	MOTOR FAN
53-3	P0783053-3	BALL BEARING 6205ZZ
53-4	P0783053-4	BALL BEARING 6205ZZ
54	P0783054	STRAIN RELIEF TYPE-3 PG15
55	P0783055	FLAT WASHER 5MM
56	P0783056	CAP SCREW M5-.8 X 10
58	P0783058	TRIGGER BUTTON CONNECTION
59	P0783059	MOTOR GASKET
60	P0783060	SPANNER NUT M20-1.5 LH
62	P0783062	CAP SCREW M10-1.5 X 20
63	P0783063	BALL OILER 10MM PRESS-IN
64	P0783064	HOOD ARM MOUNTING BRACKET
65	P0783065	CAP SCREW M8-1.25 X 25
66	P0783066	FLAT WASHER 8MM

REF	PART #	DESCRIPTION
67	P0783067	HEADSTOCK EXTENSION SPRING
68	P0783068	CAP SCREW M8-1.25 X 25
69	P0783069	SPRING ARM (LOWER)
73	P0783073	SPACER 44 X 17
82	P0783082	WORM
84	P0783084	MOTOR HOUSING
85	P0783085	OIL SIGHT GLASS 24MM
88	P0783088	DRAIN PLUG M16-2 X 12
89	P0783089	KNURLED NUT M10-1.5
90	P0783090	CAP SCREW M10-1.5 X 80
137	P0783137	STRAIN RELIEF TYPE-3 PG20
138	P0783138	LOCK WASHER 10MM
139	P0783139	CONTROL BOX COVER
140	P0783140	CONTROL BOX
141	P0783141	KEY 6 X 6 X 30
142	P0783142	RUBBER GASKET
143	P0783143	MOTOR SPEC PLATE
144	P0783144	CAP SCREW M3-.5 X 6

BUY PARTS ONLINE AT GRIZZLY.COM!
Scan QR code to visit our Parts Store.

Column & Headstock

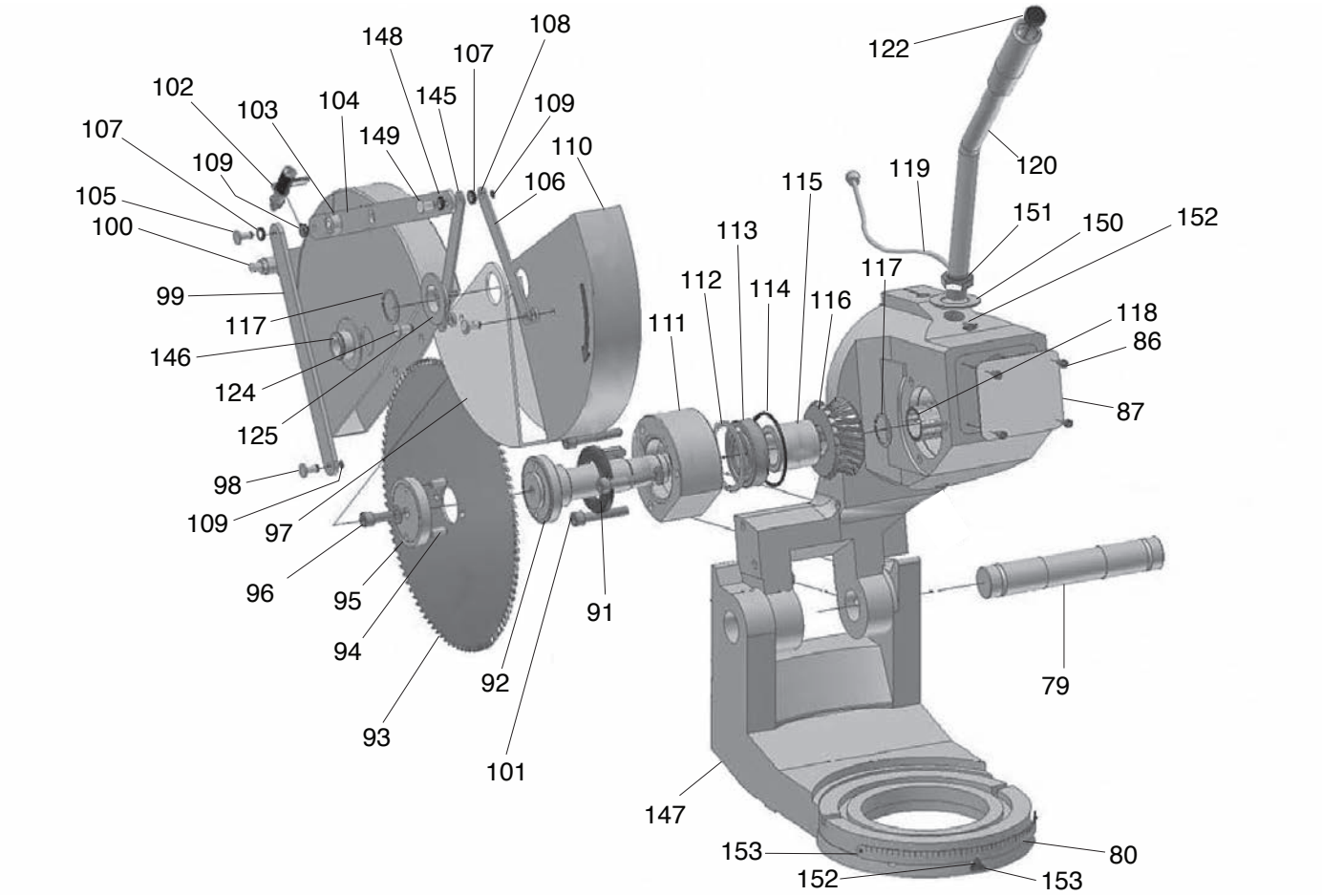

REF	PART #	DESCRIPTION
79	P0783079	PIVOT SHAFT
80	P0783080	MITER SCALE
86	P0783086	CAP SCREW M3-.5 X 6
87	P0783087	IDENTIFICATION PLATE
91	P0783091	OIL SEAL 45 X 65 X 14
92	P0783092	BLADE SPINDLE
93	P0783093	SAW BLADE 11" X 180-TOOTH
94	P0783094	ROLL PIN 8 X 20
95	P0783095	BLADE FLANGE
96	P0783096	CAP SCREW M10-1.5 X 25 LH
97	P0783097	LOWER BLADE HOOD
98	P0783098	CLEVIS PIN 8 X 18 GROOVED
99	P0783099	BLADE HOOD LINKAGE 9-1/2"
100	P0783100	HOOD ROD PIVOT
101	P0783101	CAP SCREW M10-1.5 X 60
102	P0783102	COOLANT SHUT-OFF VALVE
103	P0783103	EXT RETAINING RING 9MM
104	P0783104	BLADE HOOD LINKAGE 11-1/2"
105	P0783105	CLEVIS PIN 8 X 15 GROOVED
106	P0783106	BLADE HOOD LINKAGE 7-1/2"
107	P0783107	SPACER 8 X 3MM (NYLON)
108	P0783108	BLADE HOOD LINKAGE 6-1/2"
109	P0783109	EXT RETAINING RING 8MM

REF	PART #	DESCRIPTION
110	P0783110	UPPER BLADE HOOD
111	P0783111	BEARING HOUSING
112	P0783112	EXT RETAINING RING 72MM
113	P0783113	BALL BEARING 6207-OPEN
114	P0783114	O-RING 75 X 2.7
115	P0783115	SPACER
116	P0783116	WORM GEAR
117	P0783117	EXT RETAINING RING 32MM
118	P0783118	NEEDLE BEARING BK3026
119	P0783119	LEVER ARM CABLE 36" RUBBER
120	P0783120	LEVER ARM M22-2.5
122	P0783122	POWER BUTTON ONPOW LAS1-A 5A
124	P0783124	CLEVIS PIN 8 X 13 GROOVED
125	P0783125	SPACER 2 X 30MM (NYLON)
145	P0783145	HOOD ROD PIVOT
146	P0783146	HOOD PIVOT SPACER
147	P0783147	BASE
148	P0783148	SPACER 8 X 2MM (NYLON)
149	P0783149	CLEVIS PIN 8 X 22 GROOVED
150	P0783150	FLAT WASHER 22MM
151	P0783151	HEX NUT M22-2.5
152	P0783152	LEVER ARM POINTER
153	P0783153	RIVET 2 X 6MM NAMEPLATE, STEEL

BUY PARTS ONLINE AT GRIZZLY.COM!
Scan QR code to visit our Parts Store.

Electrical Parts

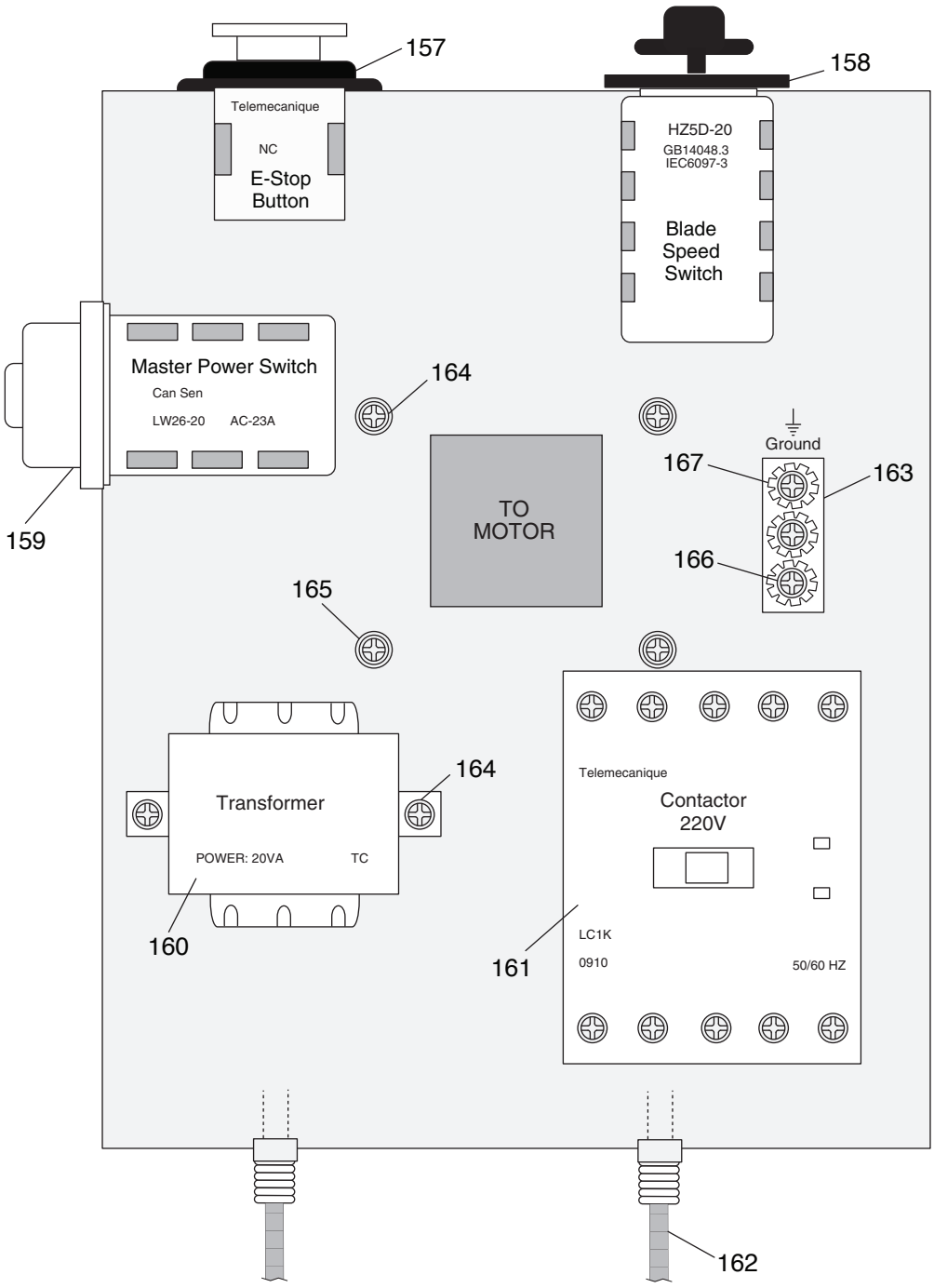

REF	PART #	DESCRIPTION
157	P0783157	E-STOP BUTTON TELE ZB2-BE102C
158	P0783158	ROTARY SWITCH CANSEN HZ5D-20 1/0/2
159	P0783159	ROTARY SWITCH CANSEN LW26-20 24V
160	P0783160	TRANSFORMER 20VA-TC 230V/400V-24V
161	P0783161	CONTACTOR TELE LC1K-0910 24V
162	P0783162	PUMP CORD 3-WIRE, 72"

REF	PART #	DESCRIPTION
163	P0783163	GROUNDING BLOCK 3-TERMINAL
164	P0783164	PHLP HD SCR M4-.7 X 6
165	P0783165	FLAT WASHER 4MM
166	P0783166	PHLP HD SCR M5-.8 X 6
167	P0783167	EXT TOOTH WASHER 5MM

BUY PARTS ONLINE AT GRIZZLY.COM!
Scan QR code to visit our Parts Store.

Labels & Cosmetics

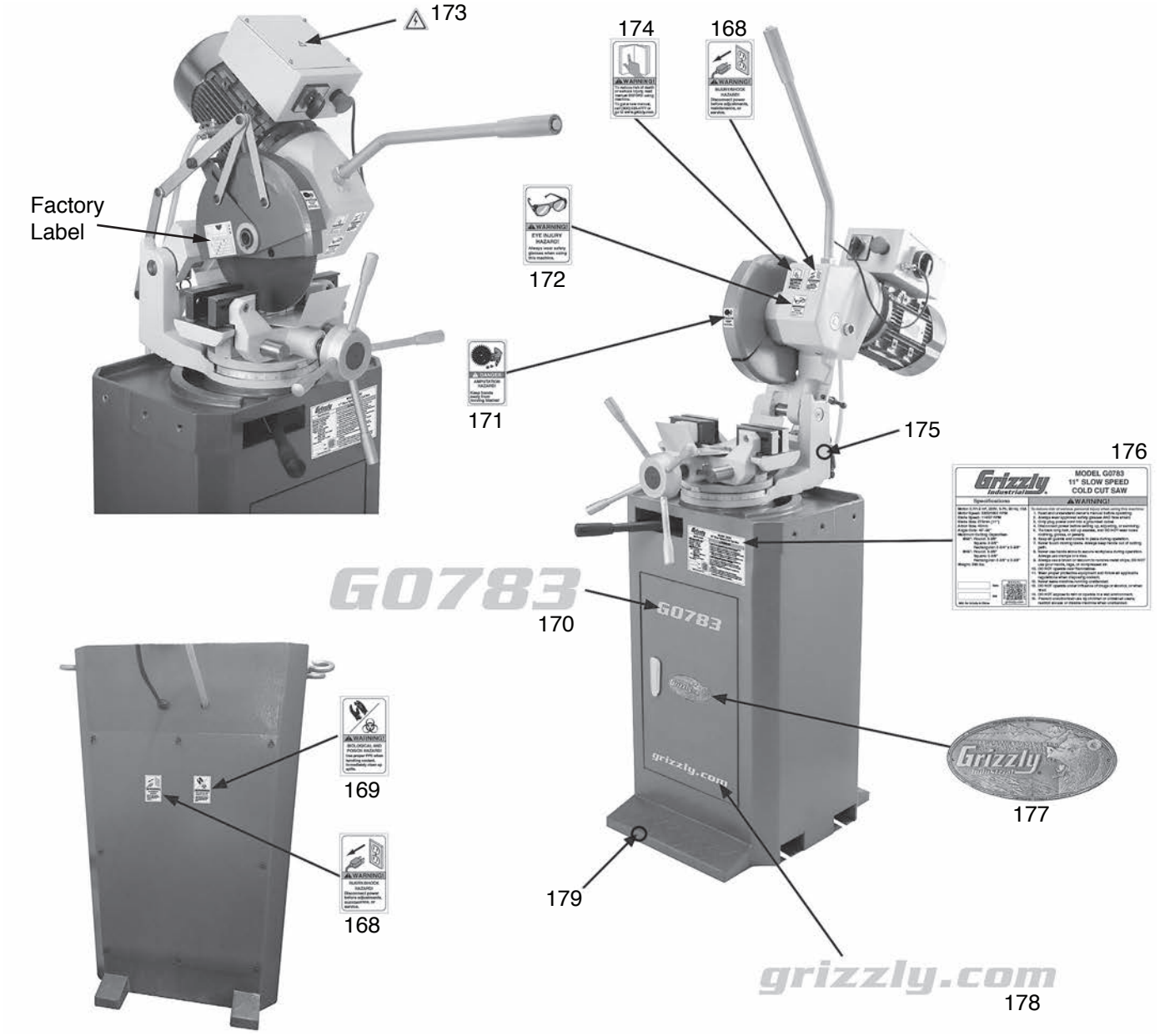

REF	PART #	DESCRIPTION
168	P0783168	DISCONNECT POWER LABEL
169	P0783169	BIOLOGICAL/POISON LABEL
170	P0783170	MODEL NUMBER LABEL
171	P0783171	BLADE/AMPUTATION LABEL
172	P0783172	SAFETY GLASSES LABEL
173	P0783173	ELECTRICITY LABEL

REF	PART #	DESCRIPTION
174	P0783174	READ MANUAL LABEL
175	P0783175	GRIZZLY PUTTY TOUCH-UP PAINT
176	P0783176	MACHINE ID LABEL
177	P0783177	GRIZZLY NAMEPLATE-MINI
178	P0783178	GRIZZLY.COM LABEL
179	P0783179	GRIZZLY GREEN TOUCH-UP PAINT

⚠WARNING

Safety labels warn about machine hazards and ways to prevent injury. The owner of this machine MUST maintain the original location and readability of the labels on the machine. If any label is removed or becomes unreadable, REPLACE that label before using the machine again. Contact Grizzly at (800) 523-4777 or www.grizzly.com to order new labels.

BUY PARTS ONLINE AT GRIZZLY.COM!
Scan QR code to visit our Parts Store.

Grizzly Industrial, Inc. WARRANTY CARD

Name _____

Street _____

City _____ State _____ Zip _____

Phone # _____ Email _____

Model # _____ Order # _____ Serial # _____

The following information is given on a voluntary basis. It will be used for marketing purposes to help us develop better products and services. ***Of course, all information is strictly confidential.***

1. How did you learn about us?

____ Advertisement ____ Friend ____ Catalog
____ Card Deck ____ Website ____ Other:

2. Which of the following magazines do you subscribe to?

____ Cabinetmaker & FDM
____ Family Handyman
____ Hand Loader
____ Handy
____ Home Shop Machinist
____ Journal of Light Cont.
____ Live Steam
____ Model Airplane News
____ Old House Journal
____ Popular Mechanics
____ Popular Science
____ Popular Woodworking
____ Precision Shooter
____ Projects in Metal
____ RC Modeler
____ Rifle
____ Shop Notes
____ Shotgun News
____ Today's Homeowner
____ Wood
____ Wooden Boat
____ Woodshop News
____ Woodsmith
____ Woodwork
____ Woodworker West
____ Woodworker's Journal
____ Other:

3. What is your annual household income?

____ $20,000-$29,000 ____ $30,000-$39,000 ____ $40,000-$49,000
____ $50,000-$59,000 ____ $60,000-$69,000 ____ $70,000+

4. What is your age group?

____ 20-29 ____ 30-39 ____ 40-49
____ 50-59 ____ 60-69 ____ 70+

5. How long have you been a woodworker/metalworker?

____ 0-2 Years ____ 2-8 Years ____ 8-20 Years ____ 20+ Years

6. How many of your machines or tools are Grizzly?

____ 0-2 ____ 3-5 ____ 6-9 ____ 10+

7. Do you think your machine represents a good value? _____Yes _____No

8. Would you recommend Grizzly Industrial to a friend? _____Yes _____No

9. Would you allow us to use your name as a reference for Grizzly customers in your area?
Note: *We never use names more than 3 times.* _____Yes _____No

10. Comments: _____

_____

_____

_____

CUT ALONG DOTTED LINE

FOLD ALONG DOTTED LINE

Place
Stamp
Here



GRIZZLY INDUSTRIAL, INC.
P.O. BOX 2069
BELLINGHAM, WA 98227-2069

FOLD ALONG DOTTED LINE

Send a Grizzly Catalog to a friend:

Name_____

Street_____

City_____State_____Zip_____

TAPE ALONG EDGES--PLEASE DO NOT STAPLE

WARRANTY AND RETURNS

Grizzly Industrial, Inc. warrants every product it sells for a period of **1 year** to the original purchaser from the date of purchase. This warranty does not apply to defects due directly or indirectly to misuse, abuse, negligence, accidents, repairs or alterations or lack of maintenance. This is Grizzly's sole written warranty and any and all warranties that may be implied by law, including any merchantability or fitness, for any particular purpose, are hereby limited to the duration of this written warranty. We do not warrant or represent that the merchandise complies with the provisions of any law or acts unless the manufacturer so warrants. In no event shall Grizzly's liability under this warranty exceed the purchase price paid for the product and any legal actions brought against Grizzly shall be tried in the State of Washington, County of Whatcom.

We shall in no event be liable for death, injuries to persons or property or for incidental, contingent, special, or consequential damages arising from the use of our products.

To take advantage of this warranty, contact us by mail or phone and give us all the details. We will then issue you a "Return Number,'' which must be clearly posted on the outside as well as the inside of the carton. We will not accept any item back without this number. Proof of purchase must accompany the merchandise.

The manufacturers reserve the right to change specifications at any time because they constantly strive to achieve better quality equipment. We make every effort to ensure that our products meet high quality and durability standards and we hope you never need to use this warranty.

Please feel free to write or call us if you have any questions about the machine or the manual.

Thank you again for your business and continued support. We hope to serve you again soon.

grizzly.com®

TOOL WEBSITE

Buy Direct and Save with Grizzly® – Trusted, Proven and a Great Value!

~Since 1983~

Visit Our Website Today For Current Specials!

ORDER

24 HOURS A DAY!

1-800-523-4777

VISA MasterCard DISCOVER NOVUS AMERICAN EXPRESS