SECTION 9: PARTS

We do our best to stock replacement parts when possible, but we cannot guarantee that all parts shown are available for purchase. Call **(800) 523-4777** or visit **www.grizzly.com/parts** to check for availability.

Body

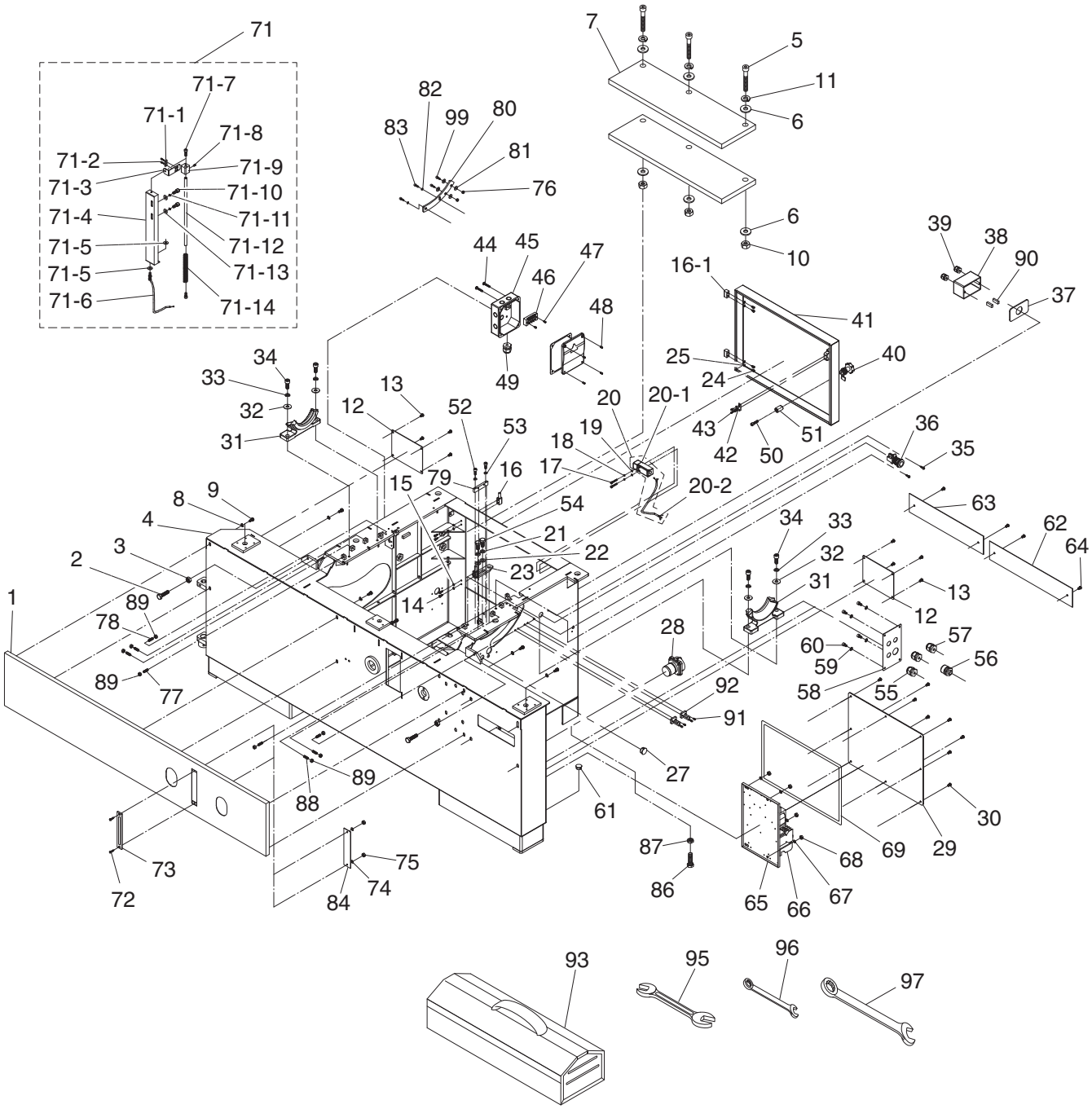

Body Parts List

REF	PART #	DESCRIPTION
1	P0764Z0001	FRONT PANEL
2	P0764Z0002	HEX BOLT M10-1.5 X 40
3	P0764Z0003	HEX NUT M10-1.5
4	P0764Z0004	MACHINE FRAME
5	P0764Z0005	CAP SCREW M12-1.75 X 80
6	P0764Z0006	FLAT WASHER 12MM
7	P0764Z0007	PLATE
8	P0764Z0008	LOCK WASHER 6MM
9	P0764Z0009	CAP SCREW M6-1 X 16
10	P0764Z0010	LOCK NUT M12-1.75
11	P0764Z0011	LOCK WASHER 12MM
12	P0764Z0012	ATTACHMENT ACCESS PANEL
13	P0764Z0013	BUTTON HD CAP SCR M6-1 X 12
14	P0764Z0014	CAP SCREW M5-.8 X 12
15	P0764Z0015	LOCK WASHER 5MM
16	P0764Z0016	HINGE POST
16-1	P0764Z0016-1	HINGE
17	P0764Z0017	CAP SCREW M4-.7 X 30
18	P0764Z0018	LOCK WASHER 4MM
19	P0764Z0019	FLAT WASHER 4MM
20	P0764Z0020	DOOR LIMIT SWITCH ASSEMBLY
20-1	P0764Z0020-1	LIMIT SWITCH SHINOZAK AZD-211
20-2	P0764Z0020-2	LIMIT SWITCH CORD 20G 2W 16"
21	P0764Z0021	LOCK WASHER 12MM
22	P0764Z0022	FLAT WASHER 12MM
23	P0764Z0023	PLATE
24	P0764Z0024	CAP SCREW M5-.8 X 8
25	P0764Z0025	LOCK WASHER 5MM
27	P0764Z0027	PANEL PLUG 38MM
28	P0764Z0028	MASTER POWER SWITCH KONCAR 07-40U06
29	P0764Z0029	ELECTRICAL BOX ACCESS PANEL
30	P0764Z0030	BUTTON HD CAP SCR M6-1 X 10
31	P0764Z0031	TRUNNION
32	P0764Z0032	FLAT WASHER 10MM
33	P0764Z0033	LOCK WASHER 10MM
34	P0764Z0034	CAP SCREW M10-1.5 X 35
35	P0764Z0035	TAP SCREW M5 X 20
36	P0764Z0036	E-STOP BUTTON RENY R2-PNR4-1B-R
37	P0764Z0037	SWITCH BOX GASKET
38	P0764Z0038	SWITCH BOX
39	P0764Z0039	STRAIN RELIEF PG21 LT STRAIGHT
40	P0764Z0040	DOOR KNOB ASSEMBLY
41	P0764Z0041	DOOR W/HINGE ASSEMBLIES
42	P0764Z0042	LOCK WASHER 4MM
43	P0764Z0043	PHLP HD SCR M4-.7 X 12
44	P0764Z0044	BUTTON HD CAP SCR M6-1 X 20
45	P0764Z0045	JUNCTION BOX
46	P0764Z0046	TERMINAL BAR 4P PB2504
47	P0764Z0047	PHLP HD SCR M5-.8 X 8
48	P0764Z0048	BUTTON HD CAP SCR M5-.8 X 12
49	P0764Z0049	STRAIN RELIEF PG20 LT STRAIGHT
50	P0764Z0050	CAP SCREW M6-1 X 45
51	P0764Z0051	DOOR LATCH
52	P0764Z0052	CAP SCREW M6-1 X 30
53	P0764Z0053	LOCK WASHER 6MM
54	P0764Z0054	HEX BOLT M12-1.75 X 25
55	P0764Z0055	STRAIN RELIEF M20 TYPE-6 ST
56	P0764Z0056	CONDUIT FITTING PGN21-28 LT STRAIGHT
57	P0764Z0057	STRAIN RELIEF PG20 LT STRAIGHT
58	P0764Z0058	STRAIN RELIEF PLATE
59	P0764Z0059	LOCK WASHER 6MM
60	P0764Z0060	CAP SCREW M6-1 X 12
61	P0764Z0061	PANEL PLUG 12MM
62	P0764Z0062	COVER PLATE (RH)
63	P0764Z0063	COVER PLATE (LH)
64	P0764Z0064	FLANGE SCREW M6-1 X 10
65	P0764Z0065	ELECTRICAL MOUNTING PLATE
66	P0764Z0066	ELECTRICAL PANEL
67	P0764Z0067	FLAT WASHER 6MM
68	P0764Z0068	FLANGE NUT M6-1
69	P0764Z0069	GASKET 2 X 300 X 7.5MM
71	P0764Z0071	TILT INDICATOR ASSEMBLY
71-1	P0764Z0071-1	FLAT WASHER 5MM
71-2	P0764Z0071-2	PHLP HD SCR M5-.8 X 10
71-3	P0764Z0071-3	POINTER
71-4	P0764Z0071-4	SUPPORT PLATE
71-5	P0764Z0071-5	FLAT WASHER 6MM
71-6	P0764Z0071-6	STEEL WIRE
71-7	P0764Z0071-7	CAP SCREW M5-.8 X 10
71-8	P0764Z0071-8	SET SCREW M5-.8 X 10
71-9	P0764Z0071-9	POINTER MOUNT
71-10	P0764Z0071-10	CAP SCREW M6-1 X 12
71-11	P0764Z0071-11	LOCK WASHER 6MM
71-12	P0764Z0071-12	SHAFT
71-13	P0764Z0071-13	FLAT WASHER 6MM
71-14	P0764Z0071-14	COMPRESSION SPRING
72	P0764Z0072	FLANGE SCREW M4-.7 X 20
73	P0764Z0073	TILT SCALE
74	P0764Z0074	FLAT WASHER 4MM
75	P0764Z0075	HEX NUT M4-.7
76	P0764Z0076	LOCK NUT M5-.8
77	P0764Z0077	SET SCREW M8-1.25 X 30
78	P0764Z0078	SET SCREW M8-1.25 X 40
79	P0764Z0079	BLOCK
80	P0764Z0080	TRUNNION PLATE
81	P0764Z0081	FLAT WASHER 5MM
82	P0764Z0082	LOCK WASHER 6MM
83	P0764Z0083	CAP SCREW M6-1 X 12
84	P0764Z0084	TILT SCALE WINDOW
86	P0764Z0086	HEX BOLT M16-2 X 50
87	P0764Z0087	HEX NUT M16-2
88	P0764Z0088	SET SCREW M8-1.25 X 25
89	P0764Z0089	HEX NUT M8-1.25
90	P0764Z0090	CORD CONNECTOR
91	P0764Z0091	TAP SCREW M4 X 16
92	P0764Z0092	TOOL HANGER
93	P0764Z0093	TOOLBOX
95	P0764Z0095	WRENCH 24 X 27MM OPEN-ENDS
96	P0764Z0096	WRENCH 19MM COMBO
97	P0764Z0097	WRENCH 30MM COMBO
99	P0764Z0099	CAP SCREW M5-.8 X 16

Main Tables

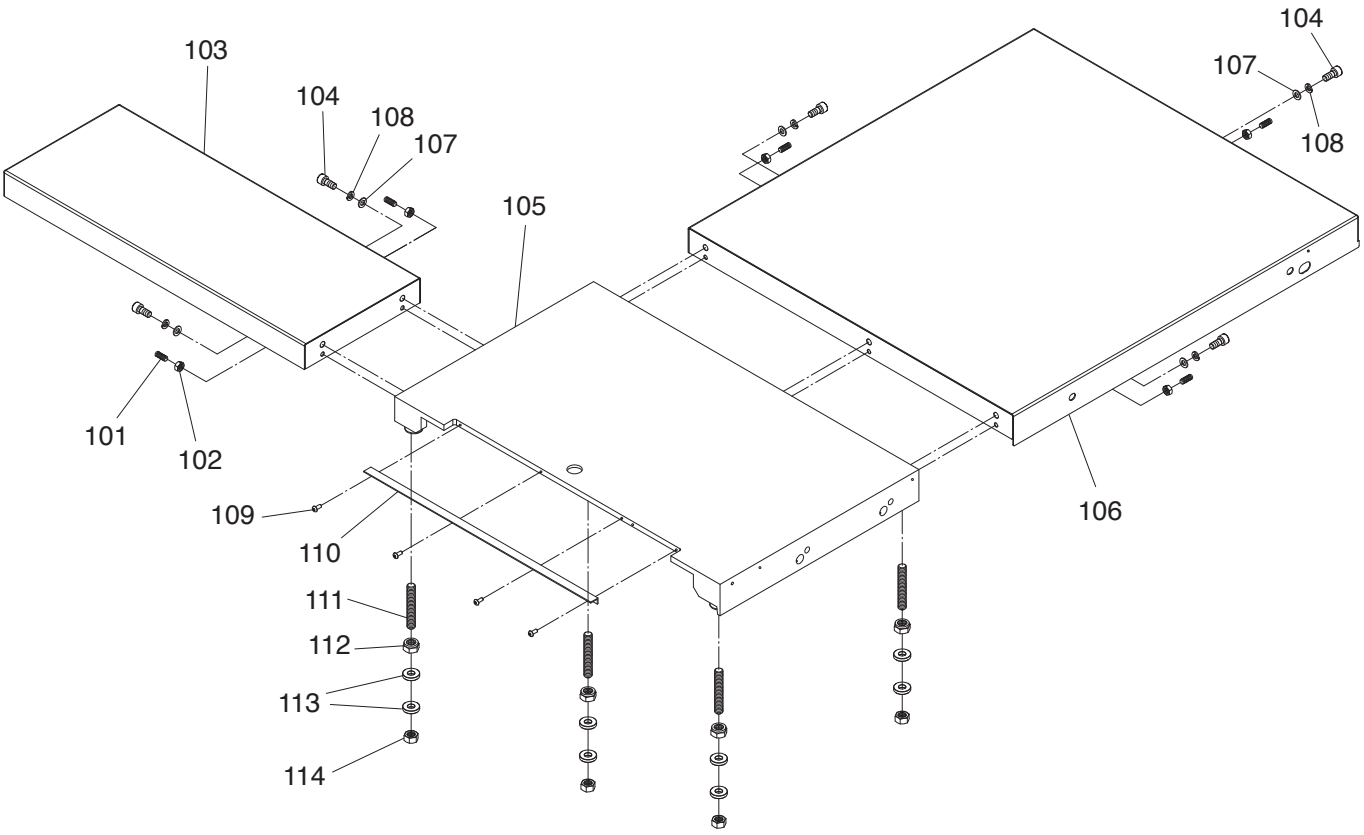

REF	PART #	DESCRIPTION
101	P0764Z0101	SET SCREW M10-1.5 X 20
102	P0764Z0102	HEX NUT M10-1.5
103	P0764Z0103	EXTENSION TABLE (LH)
104	P0764Z0104	CAP SCREW M10-1.5 X 25
105	P0764Z0105	MAIN TABLE
106	P0764Z0106	EXTENSION TABLE (RH)
107	P0764Z0107	FLAT WASHER 10MM

REF	PART #	DESCRIPTION
108	P0764Z0108	LOCK WASHER 10MM
109	P0764Z0109	BUTTON HD CAP SCR M6-1 X 12
110	P0764Z0110	TABLE INSERT
111	P0764Z0111	STUD-FT M16-2 X 100
112	P0764Z0112	LOCK NUT M16-2
113	P0764Z0113	FLAT WASHER 16MM
114	P0764Z0114	HEX NUT M16-2

Control Panel

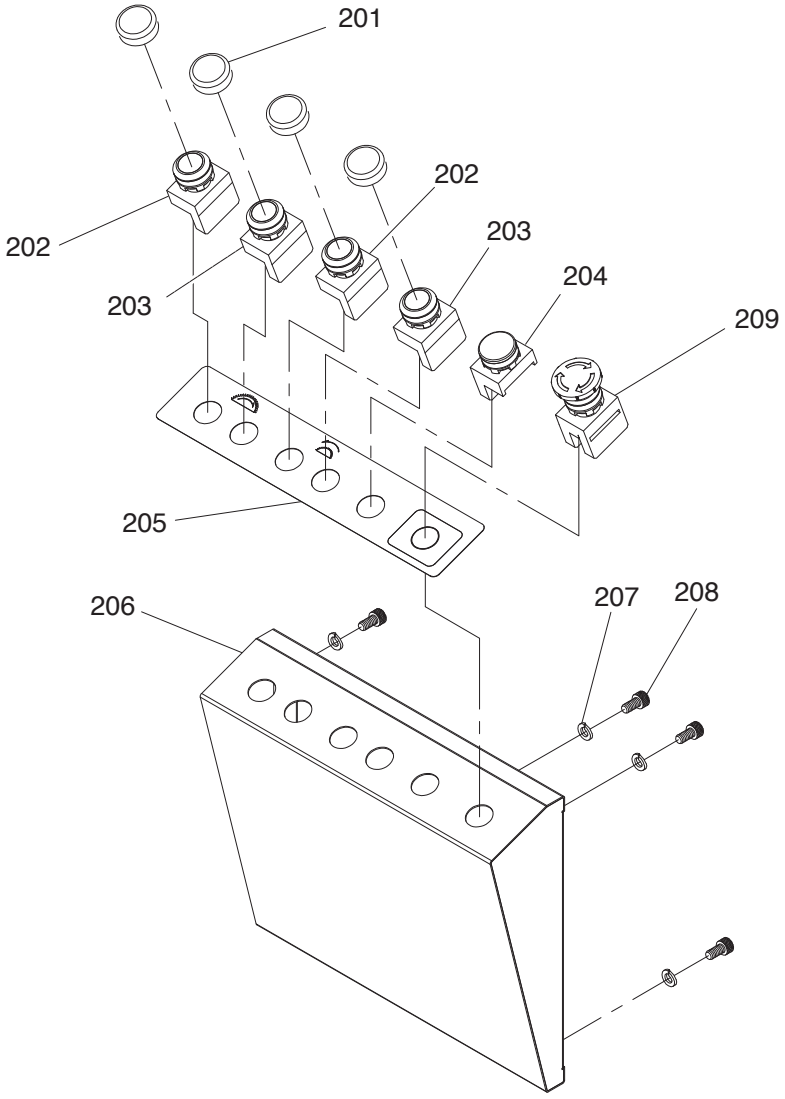

REF	PART #	DESCRIPTION
201	P0764Z0201	BUTTON DUST COVER (PLASTIC)
202	P0764Z0202	ON BUTTON RENY R9C01VN 22MM GRN
203	P0764Z0203	OFF BUTTON RENY R9C01VN 22MM RED
204	P0764Z0204	POWER LAMP KEYON KE22DS
205	P0764Z0205	CONTROL PANEL LABEL

REF	PART #	DESCRIPTION
206	P0764Z0206	CONTROL PANEL PLATE
207	P0764Z0207	LOCK WASHER 6MM
208	P0764Z0208	CAP SCREW M6-1 X 16
209	P0764Z0209	E-STOP BUTTON RENY R9C01VN 22MM

Blade Enclosure

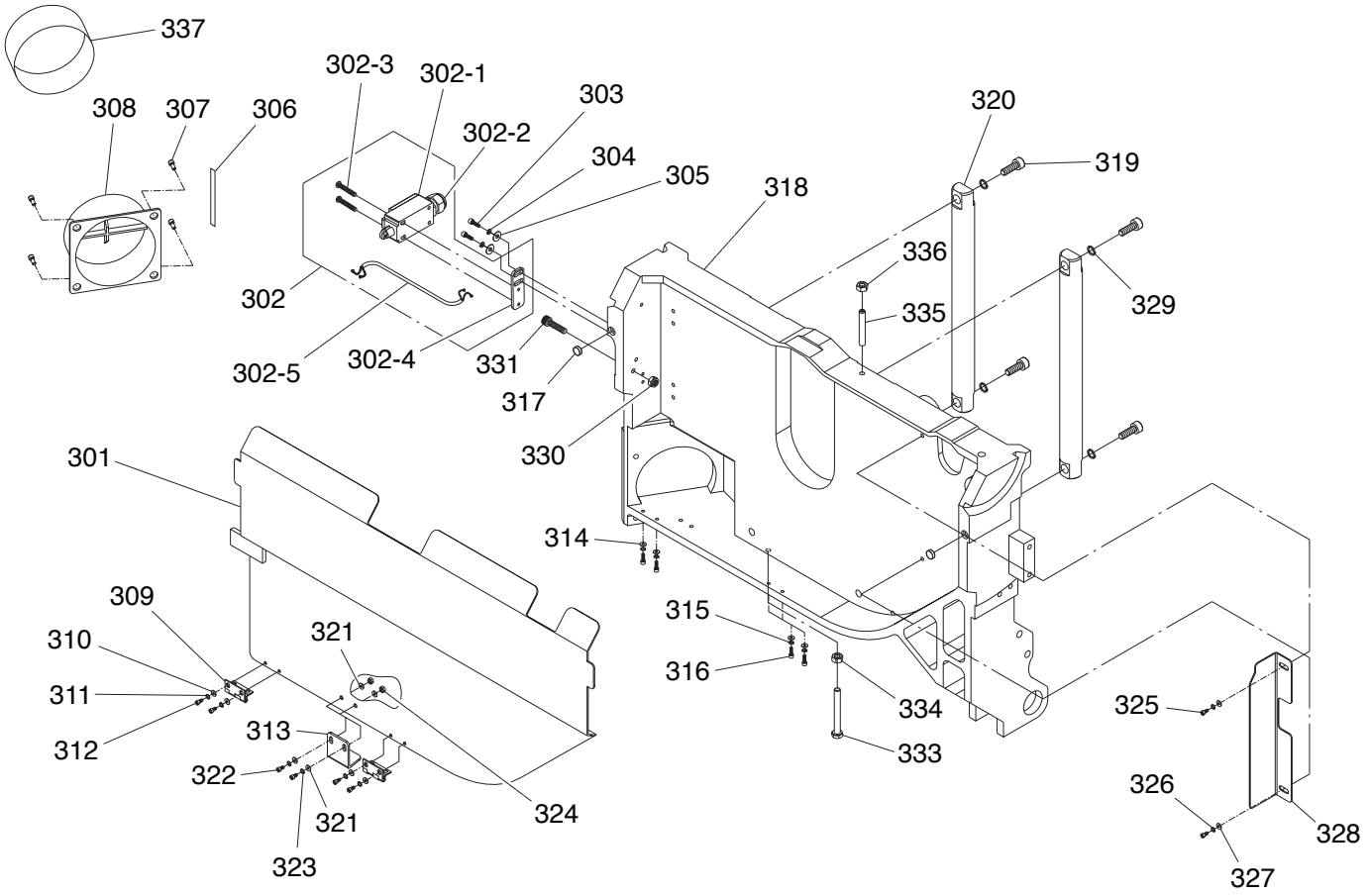

REF	PART #	DESCRIPTION
301	P0764Z0301	BLADE COVER
302	P0764Z0302	BLADE COVER LIMIT SWITCH ASSY
302-1	P0764Z0302-1	BLADE LIMIT SWITCH SHINOZAK AZD-1112
302-2	P0764Z0302-2	STRAIN RELIEF PG11
302-3	P0764Z0302-3	PHLP HD SCR M4-.7 X 35
302-4	P0764Z0302-4	LIMIT SWITCH BRACKET
302-5	P0764Z0302-5	LIMIT SWITCH CORD 20G 2W 9FT
303	P0764Z0303	CAP SCREW M5-.8 X 12
304	P0764Z0304	LOCK WASHER 5MM
305	P0764Z0305	FLAT WASHER 5MM
306	P0764Z0306	CUSHION STRIP
307	P0764Z0307	FLANGE BOLT M8-1.25 X 12
308	P0764Z0308	DUST PORT 5"
309	P0764Z0309	BLADE COVER HINGE
310	P0764Z0310	FLAT WASHER 5MM
311	P0764Z0311	LOCK WASHER 5MM
312	P0764Z0312	CAP SCREW M5-.8 X 8
313	P0764Z0313	L-BRACKET
314	P0764Z0314	FLAT WASHER 5MM
315	P0764Z0315	LOCK WASHER 5MM
316	P0764Z0316	CAP SCREW M5-.8 X 10

REF	PART #	DESCRIPTION
317	P0764Z0317	MAGNET
318	P0764Z0318	BLADE SHROUD
319	P0764Z0319	CAP SCREW M12-1.75 X 45
320	P0764Z0320	SLIDE SHAFT
321	P0764Z0321	FLAT WASHER 5MM
322	P0764Z0322	CAP SCREW M5-.8 X 16
323	P0764Z0323	LOCK WASHER 5MM
324	P0764Z0324	HEX NUT M5-.8
325	P0764Z0325	CAP SCREW M6-1 X 10
326	P0764Z0326	LOCK WASHER 6MM
327	P0764Z0327	FLAT WASHER 6MM
328	P0764Z0328	BLADE SHROUD L-BRACKET
329	P0764Z0329	LOCK WASHER 12MM
330	P0764Z0330	LOCK NUT M6-1
331	P0764Z0331	CAP SCREW M6-1 X 25
333	P0764Z0333	HEX BOLT M8-1.25 X 75
334	P0764Z0334	HEX NUT M8-1.25
335	P0764Z0335	SET SCREW M8-1.25 X 50
336	P0764Z0336	HEX NUT M8-1.25
337	P0764Z0337	DUST GASKET

Main Motor

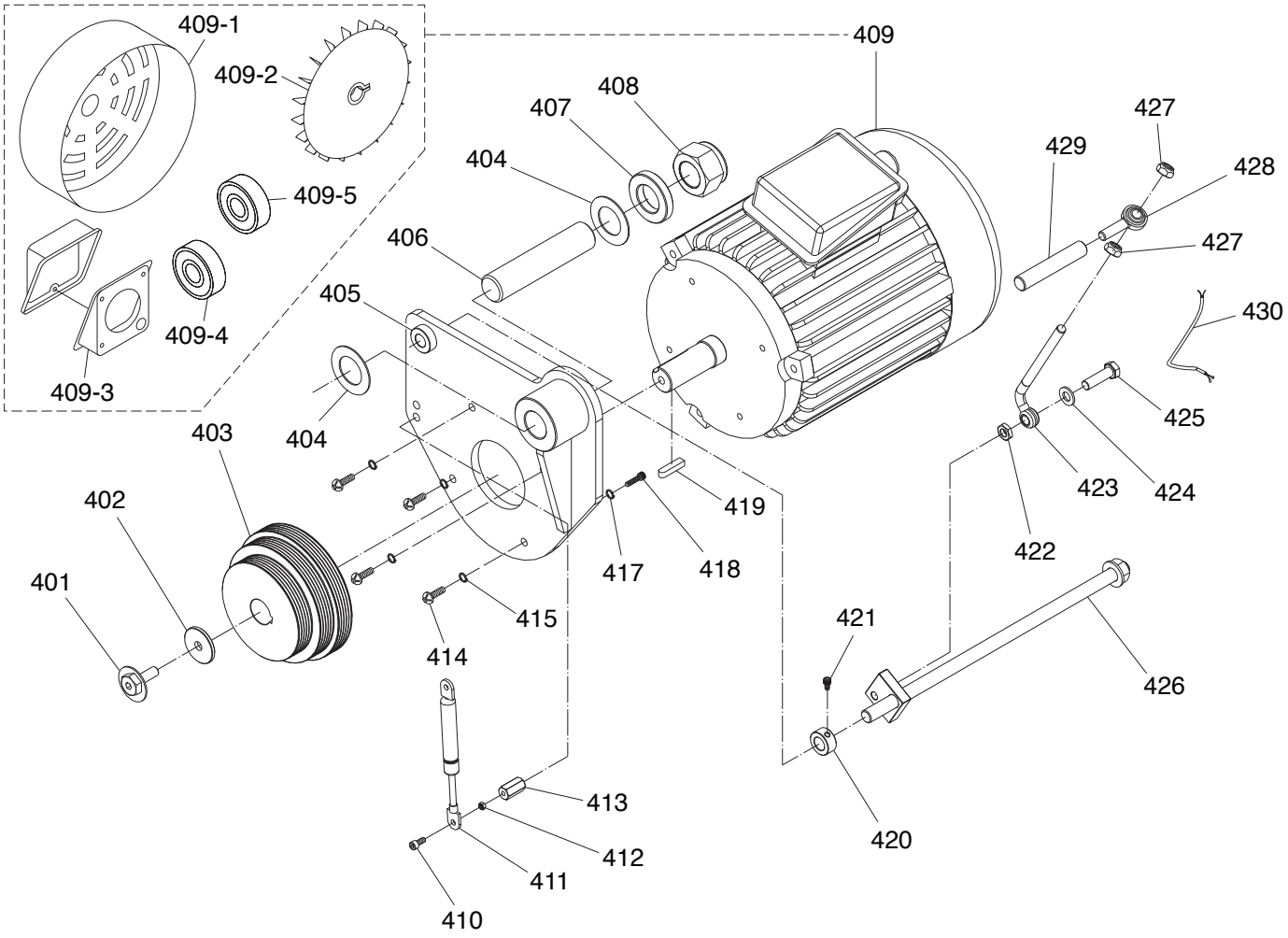

REF	PART #	DESCRIPTION
401	P0764Z0401	FLANGE CAP SCREW M10-1.5 X 20
402	P0764Z0402	PULLEY FLAT WASHER 10MM
403	P0764Z0403	MOTOR PULLEY
404	P0764Z0404	THRUST WASHER BEARING 32 X 54 X 1.5MM
405	P0764Z0405	MAIN MOTOR PLATE
406	P0764Z0406	MAIN MOTOR SHAFT
407	P0764Z0407	SPACER
408	P0764Z0408	LOCK NUT M30-3.5
409	P0764Z0409	MAIN MOTOR 10HP 220V/440V 3-PH
409-1	P0764Z0409-1	MOTOR FAN COVER
409-2	P0764Z0409-2	MOTOR FAN
409-3	P0764Z0409-3	MOTOR JUNCTION BOX
409-4	P0764Z0409-4	BALL BEARING 6206ZZ (FRONT)
409-5	P0764Z0409-5	BALL BEARING 6205ZZ (REAR)
410	P0764Z0410	CAP SCREW M6-1 X 20
411	P0764Z0411	GAS SPRING 25KG, 60L
412	P0764Z0412	HEX NUT M6-1

REF	PART #	DESCRIPTION
413	P0764Z0413	SHAFT
414	P0764Z0414	HEX HEAD BOLT M8-1.25 X 25
415	P0764Z0415	LOCK WASHER 8MM
417	P0764Z0417	LOCK WASHER 8MM
418	P0764Z0418	CAP SCREW M8-1.25 X 20
419	P0764Z0419	KEY 8 X 8 X 35
420	P0764Z0420	COLLAR
421	P0764Z0421	CAP SCREW M6-1 X 12
422	P0764Z0422	HEX NUT M10-1.5
423	P0764Z0423	ADJUSTING LEVER
424	P0764Z0424	FLAT WASHER 10MM
425	P0764Z0425	HEX BOLT M10-1.5 X 35
426	P0764Z0426	ADJUSTING SHAFT
427	P0764Z0427	LOCK NUT M10-1.5
428	P0764Z0428	EYE BOLT M10-1.5 X 60
429	P0764Z0429	SHAFT
430	P0764Z0430	TEMPERATURE CORD

Main Blade Arbor

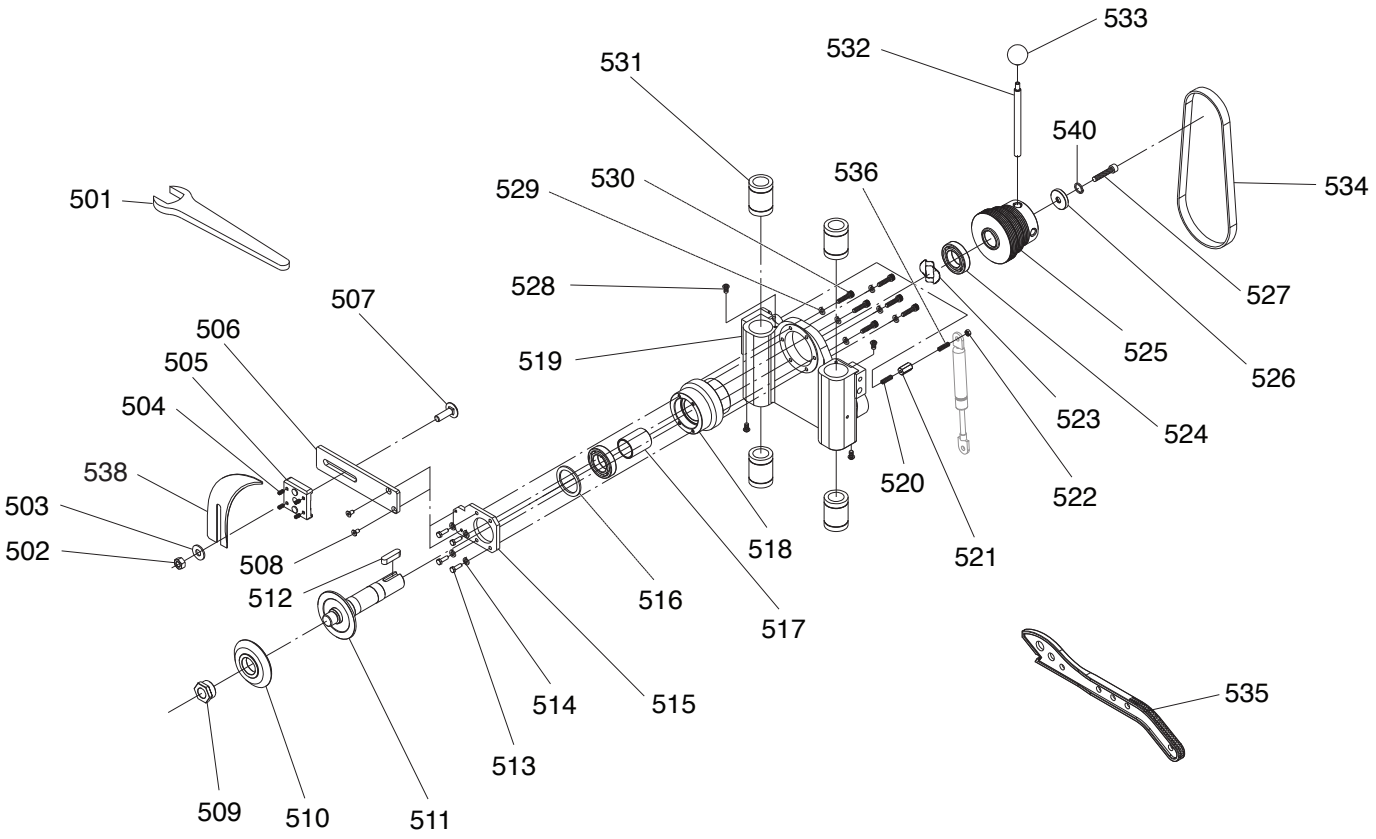

REF	PART #	DESCRIPTION
502	P0764Z0502	HEX NUT M12-1.75
503	P0764Z0503	FENDER WASHER 12MM
504	P0764Z0504	SET SCREW M5-.8 X 10
505	P0764Z0505	FIX BLOCK
506	P0764Z0506	FIX BLOCK BRACKET
507	P0764Z0507	CARRIAGE BOLT M12-1.75 X 40
508	P0764Z0508	FLAT HD SCR M6-1 X 16
509	P0764Z0509	ARBOR NUT M24-3
510	P0764Z0510	MAIN BLADE FLANGE
511	P0764Z0511	MAIN BLADE ARBOR 25.4MM
512	P0764Z0512	KEY 10 X 8 X 40
513	P0764Z0513	HEX BOLT M6-1 X 20
514	P0764Z0514	LOCK WASHER 6MM
515	P0764Z0515	ARBOR PLATE
516	P0764Z0516	SPACER
517	P0764Z0517	BUSHING
518	P0764Z0518	BEARING HOUSING
519	P0764Z0519	ARBOR SUPPORT BRACKET
520	P0764Z0520	SET SCREW M8-1.25 X 25

REF	PART #	DESCRIPTION
521	P0764Z0521	STANDOFF HEX FF M6-1
522	P0764Z0522	LOCK NUT M6-1
523	P0764Z0523	WAVE WASHER 47 X 60MM
524	P0764Z0524	BALL BEARING 6007LLB
525	P0764Z0525	MAIN BLADE PULLEY
526	P0764Z0526	PULLEY FLAT WASHER 10MM
527	P0764Z0527	CAP SCREW M10-1.5 X 25
528	P0764Z0528	FLANGE BOLT M6-1 X 12
529	P0764Z0529	LOCK WASHER 6MM
530	P0764Z0530	CAP SCREW M6-1 X 30
531	P0764Z0531	BALL BEARING LM30UU
532	P0764Z0532	LEVER SHAFT M8-1.25 X 15, 12 X 166
533	P0764Z0533	BALL KNOB M8-1.25
534	P0764Z0534	V-BELT 5V X 31.5 RIBBED
535	P0764Z0535	PUSH STICK
536	P0764Z0536	SET SCREW M6-1 X 25
538	P0764Z0538	RIVING KNIFE 300-350MM
540	P0764Z0540	LOCK WASHER 10MM

Blade Tilt System

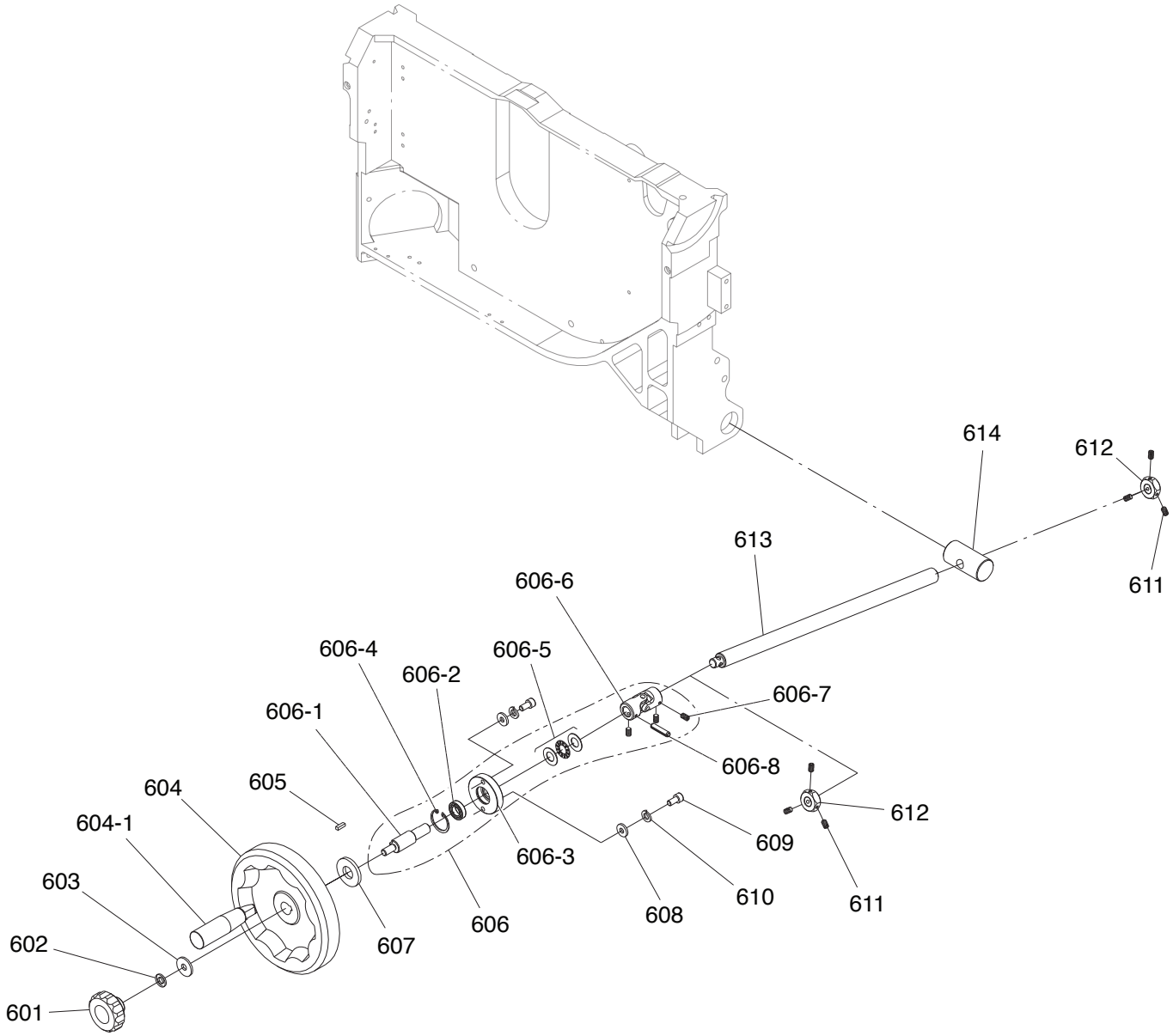

REF	PART #	DESCRIPTION
601	P0764Z0601	LOCK KNOB M10-1.5
602	P0764Z0602	LOCK WASHER 10MM
603	P0764Z0603	FENDER WASHER 10MM
604	P0764Z0604	HANDWHEEL TYPE-12 203D X 10B-K X M6-1
604-1	P0764Z0604-1	FOLDING HANDLE 110L, M6-1 X 12
605	P0764Z0605	KEY 7 X 7 X 20
606	P0764Z0606	TILT HANDWHEEL SHAFT ASSY
606-1	P0764Z0606-1	HANDWHEEL SHAFT
606-2	P0764Z0606-2	BALL BEARING 6902LLU
606-3	P0764Z0606-3	SHAFT BRACKET
606-4	P0764Z0606-4	EXT RETAINING RING 28MM
606-5	P0764Z0606-5	THRUST BEARING NTB1528+AS

REF	PART #	DESCRIPTION
606-6	P0764Z0606-6	UNIVERSAL JOINT
606-7	P0764Z0606-7	SET SCREW M6-1 X 6
606-8	P0764Z0606-8	ROLL PIN 6 X 26
607	P0764Z0607	SPACER
608	P0764Z0608	FLAT WASHER 8MM
609	P0764Z0609	CAP SCREW M8-1.25 X 20
610	P0764Z0610	LOCK WASHER 8MM
611	P0764Z0611	SET SCREW M6-1 X 6
612	P0764Z0612	LOCK COLLAR
613	P0764Z0613	TILT LEADSCREW
614	P0764Z0614	TILT LEADSCREW NUT

Blade Elevation System

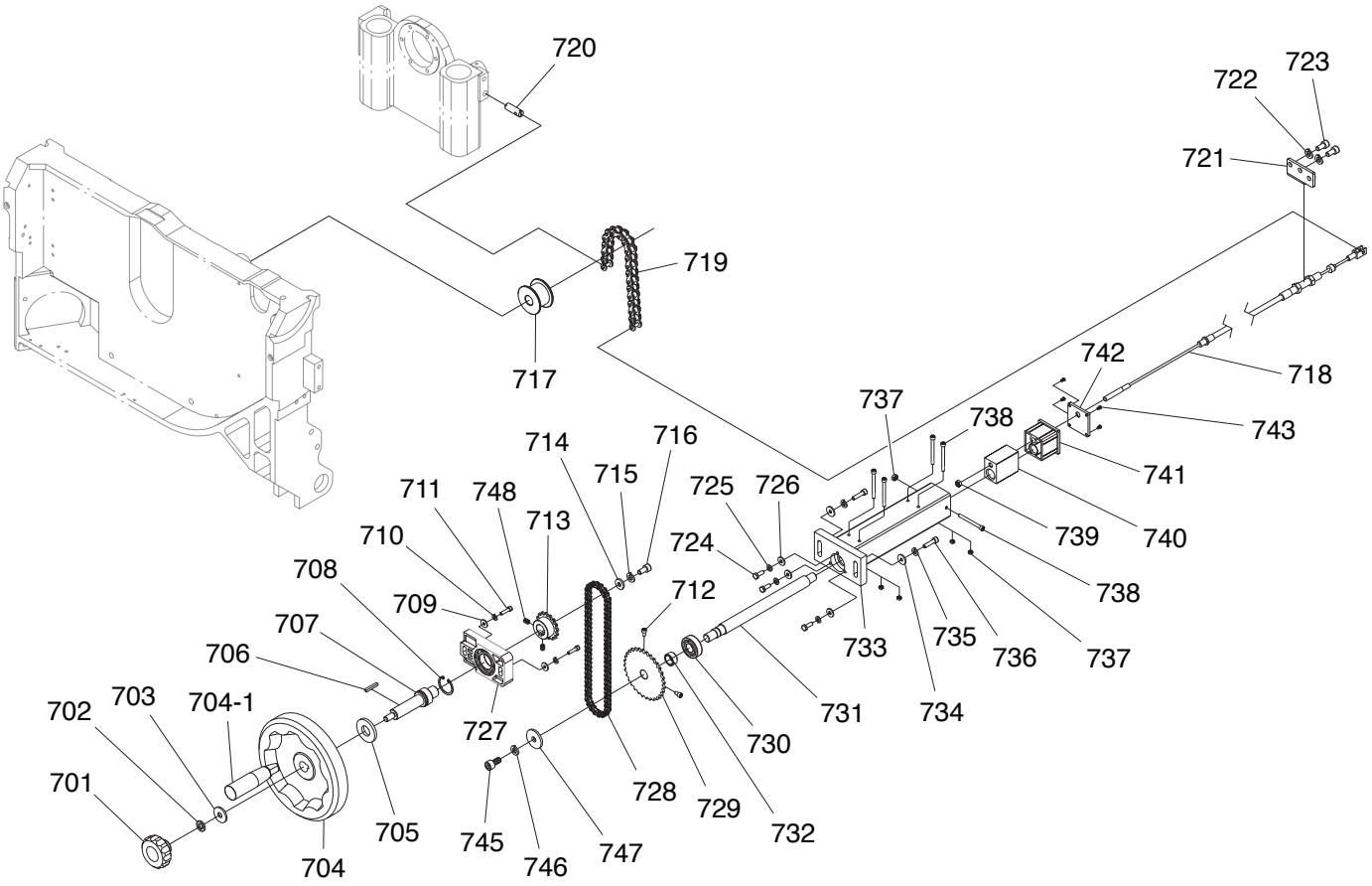

REF	PART #	DESCRIPTION
701	P0764Z0701	LOCK KNOB M10-1.5
702	P0764Z0702	LOCK WASHER 10MM
703	P0764Z0703	FENDER WASHER 10MM
704	P0764Z0704	HANDWHEEL TYPE-12 203D X 10B-K X M6-1
704-1	P0764Z0704-1	FOLDING HANDLE 110L, M6-1 X 12
705	P0764Z0705	SPACER
706	P0764Z0706	KEY 7 X 7 X 20
707	P0764Z0707	SPROCKET SHAFT (UPPER)
708	P0764Z0708	INT RETAINING RING 30MM
709	P0764Z0709	FLAT WASHER 8MM
710	P0764Z0710	LOCK WASHER 8MM
711	P0764Z0711	CAP SCREW M8-1.25 X 35
712	P0764Z0712	CAP SCREW M6-1 X 12
713	P0764Z0713	SPROCKET 16T (UPPER)
714	P0764Z0714	FENDER WASHER 8MM
715	P0764Z0715	LOCK WASHER 8MM
716	P0764Z0716	CAP SCREW M8-1.25 X 20
717	P0764Z0717	SHAFT
718	P0764Z0718	CONNECTING ROD
719	P0764Z0719	CHAIN RS50
720	P0764Z0720	CHAIN MOUNTING PIN
721	P0764Z0721	CONNECTING ROD PLATE
722	P0764Z0722	LOCK WASHER 8MM
723	P0764Z0723	CAP SCREW M8-1.25 X 20

REF	PART #	DESCRIPTION
724	P0764Z0724	HEX BOLT M6-1 X 16
725	P0764Z0725	LOCK WASHER 6MM
726	P0764Z0726	FLAT WASHER 6MM
727	P0764Z0727	SPROCKET SHAFT BRACKET (UPPER)
728	P0764Z0728	CHAIN RS35
729	P0764Z0729	SPROCKET 32T (LOWER)
730	P0764Z0730	BALL BEARING 6003LLU
731	P0764Z0731	SPROCKET SHAFT (LOWER)
732	P0764Z0732	BUSHING
733	P0764Z0733	SPROCKET SHAFT BRACKET (LOWER)
734	P0764Z0734	FLAT WASHER 8MM
735	P0764Z0735	LOCK WASHER 8MM
736	P0764Z0736	CAP SCREW M8-1.25 X 30
737	P0764Z0737	LOCK NUT M6-1
738	P0764Z0738	CAP SCREW M6-1 X 60
739	P0764Z0739	HEX NUT M8-1.25
740	P0764Z0740	CONNECTING ROD BLOCK
741	P0764Z0741	CONNECTING ROD BLOCK COVER
742	P0764Z0742	CONNECTING ROD BLOCK PLATE
743	P0764Z0743	TAP SCREW M4 X 10
745	P0764Z0745	CAP SCREW M8-1.25 X 16
746	P0764Z0746	LOCK WASHER 8MM
747	P0764Z0747	FENDER WASHER 8MM
748	P0764Z0748	SET SCREW M6-1 X 8

Scoring Blade Arbor

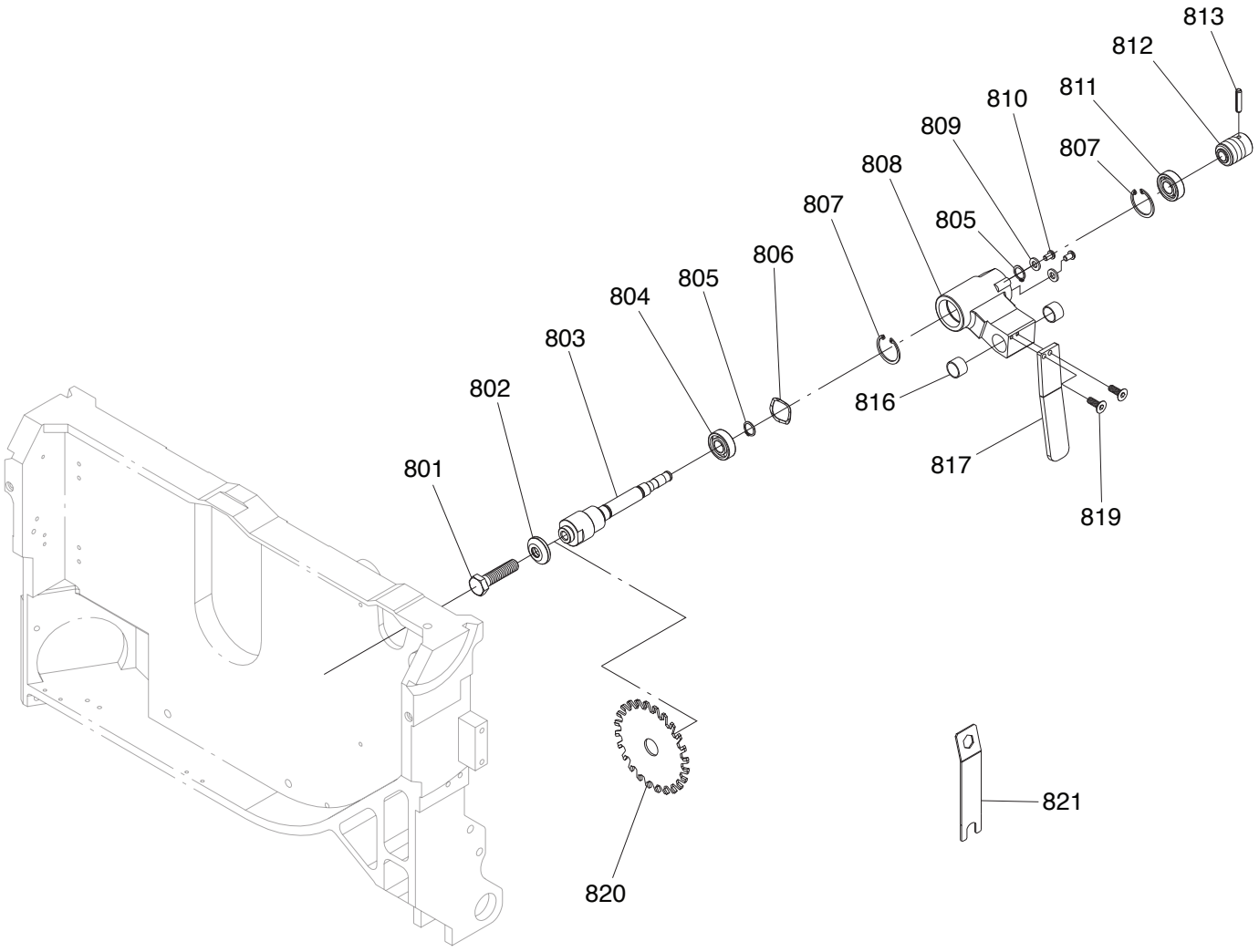

REF	PART #	DESCRIPTION
801	P0764Z0801	HEX BOLT M12-1.75 X 20
802	P0764Z0802	SCORING BLADE FLANGE
803	P0764Z0803	SCORING BLADE ARBOR
804	P0764Z0804	BALL BEARING 6003LLB
805	P0764Z0805	INT RETAINING RING 15MM
806	P0764Z0806	WAVE WASHER 26 X 34MM
807	P0764Z0807	INT RETAINING RING 35MM
808	P0764Z0808	SCORING BLADE ARBOR HOUSING
809	P0764Z0809	FLAT WASHER 6MM

REF	PART #	DESCRIPTION
810	P0764Z0810	BUTTON HD CAP SCR M6-1 X 16
811	P0764Z0811	BALL BEARING 6202LLB
812	P0764Z0812	SCORING BLADE PULLEY
813	P0764Z0813	ROLL PIN 5 X 25
816	P0764Z0816	BUSHING DU-2015
817	P0764Z0817	ARBOR HOUSING MOUNTING PLATE
819	P0764Z0819	FLAT HD SCR M5-.8 X 12
820	P0764Z0820	SCORING BLADE 4-3/4" X 20MM
821	P0764Z0821	SCORING BLADE ARBOR WRENCH

Scoring Blade Adjustment System

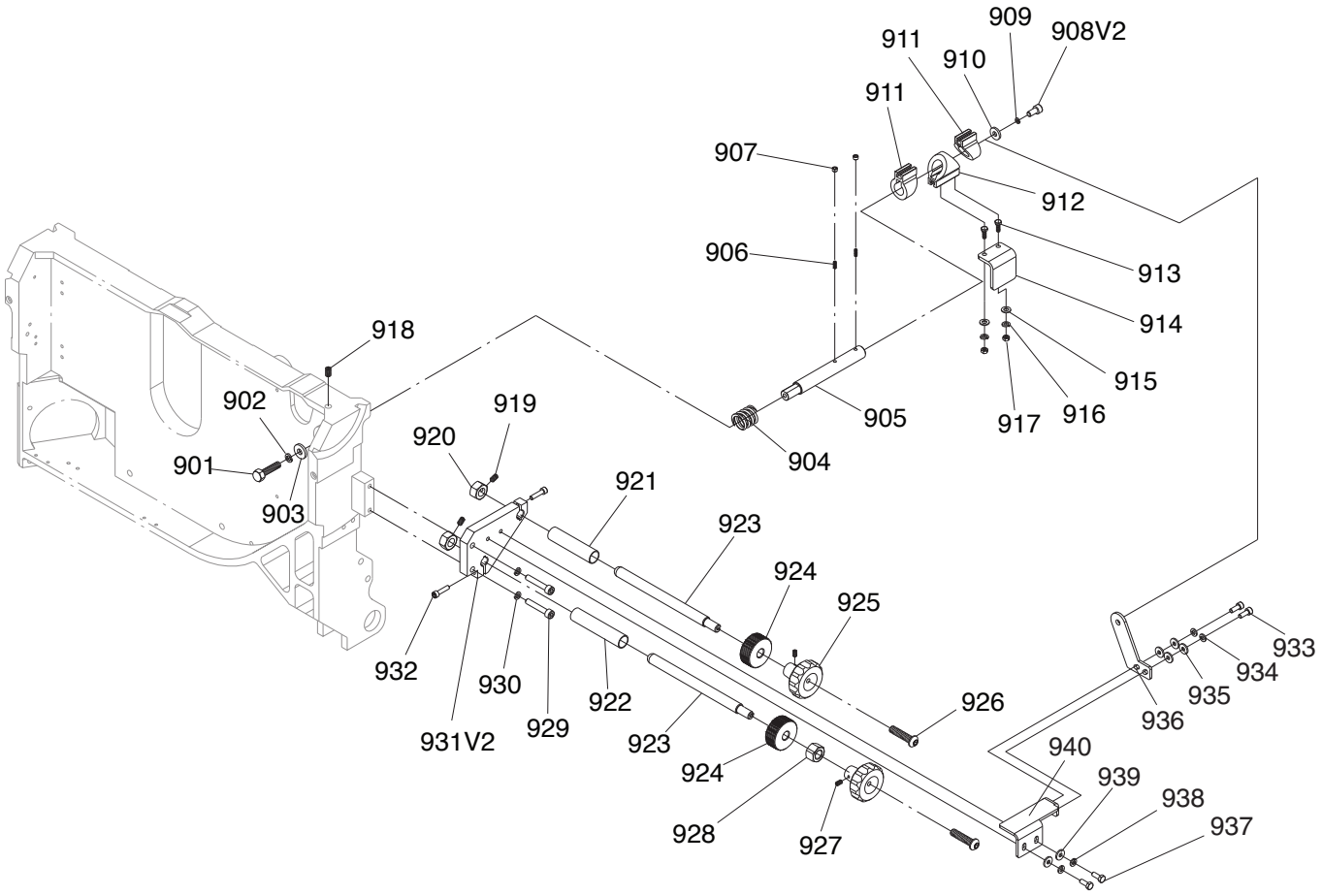

REF	PART #	DESCRIPTION
901	P0764Z0901	HEX BOLT M8-1.25 X 16
902	P0764Z0902	LOCK WASHER 8MM
903	P0764Z0903	FENDER WASHER 8MM
904	P0764Z0904	COMPRESSION SPRING
905	P0764Z0905	SHAFT
906	P0764Z0906	SET SCREW M6-1 X 12
907	P0764Z0907	THREADED SLEEVE
908V2	P0764Z0908V2	CAP SCREW M8-1.25 X 20
909	P0764Z0909	LOCK WASHER 8MM
910	P0764Z0910	FENDER WASHER 8MM
911	P0764Z0911	SHAFT SLEEVE (SINGLE ANGLE)
912	P0764Z0912	SHAFT SLEEVE (DOUBLE ANGLE)
913	P0764Z0913	HEX BOLT M6-1 X 16
914	P0764Z0914	L-BRACKET
915	P0764Z0915	FLAT WASHER 6MM
916	P0764Z0916	LOCK WASHER 6MM
917	P0764Z0917	HEX NUT M6-1
918	P0764Z0918	SET SCREW M8-1.25 X 10
919	P0764Z0919	SET SCREW M6-1 X 5
920	P0764Z0920	HEX NUT M6-1 W/THREADED HOLE

REF	PART #	DESCRIPTION
921	P0764Z0921	TILT BUSHING
922	P0764Z0922	ELEVATION BUSHING
923	P0764Z0923	TILT ADJUSTMENT LEADSCREW
924	P0764Z0924	KNURLED LOCK COLLAR
925	P0764Z0925	ADJUSTMENT KNOB
926	P0764Z0926	BUTTON HD CAP SCR M6-1 X 30
927	P0764Z0927	SET SCREW M5-.8 X 10
928	P0764Z0928	HEX NUT M16-2
929	P0764Z0929	CAP SCREW M8-1.25 X 35
930	P0764Z0930	LOCK WASHER 8MM
931V2	P0764Z0931V2	LEADSCREW BRACKET V2.05.18
932	P0764Z0932	CAP SCREW M6-1 X 25
933	P0764Z0933	CAP SCREW M6-1 X 16
934	P0764Z0934	LOCK WASHER 6MM
935	P0764Z0935	FLAT WASHER 6MM
936	P0764Z0936	FIXED PLATE
937	P0764Z0937	HEX BOLT M6-1 X 16
938	P0764Z0938	LOCK WASHER 6MM
939	P0764Z0939	FLAT WASHER 6MM
940	P0764Z0940	LEADSCREW BRACKET PLATE

Scoring Blade Motor

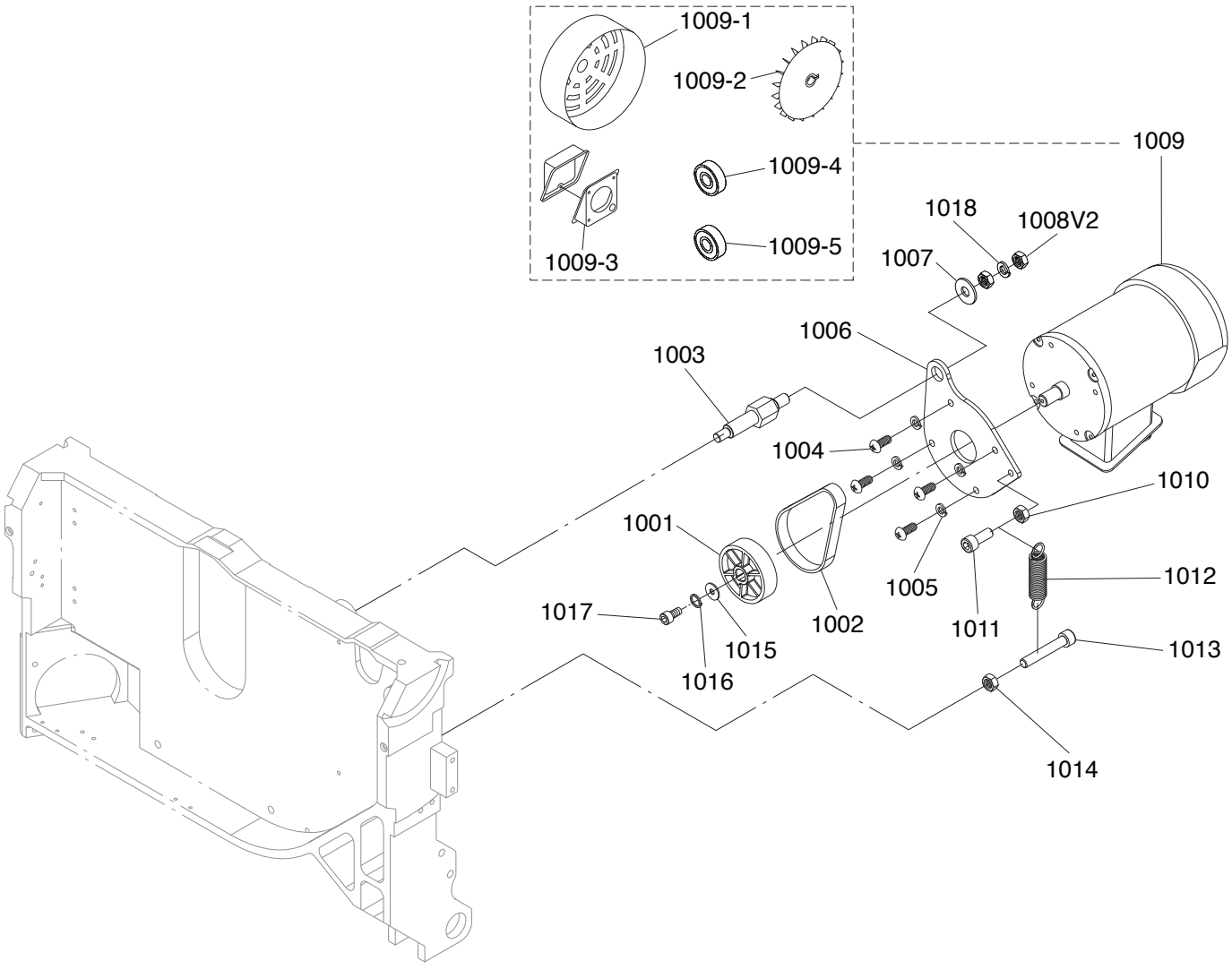

REF	PART #	DESCRIPTION
1001	P0764Z1001	PULLEY
1002	P0764Z1002	BELT 18W X 380L
1003	P0764Z1003	SHAFT
1004	P0764Z1004	BUTTON HD CAP SCR M8-1.25 X 20
1005	P0764Z1005	LOCK WASHER 8MM
1006	P0764Z1006	MOTOR MOUNT PLATE
1007	P0764Z1007	FENDER WASHER 14MM
1008V2	P0764Z1008V2	HEX NUT M14-2 V2.10.19
1009	P0764Z1009	SCORING MOTOR 1HP 220V/440V 3-PH
1009-1	P0764Z1009-1	MOTOR FAN COVER
1009-2	P0764Z1009-2	MOTOR FAN
1009-3	P0764Z1009-3	MOTOR JUNCTION BOX

REF	PART #	DESCRIPTION
1009-4	P0764Z1009-4	BALL BEARING 6203ZZ (FRONT)
1009-5	P0764Z1009-5	BALL BEARING 6202ZZ (REAR)
1010	P0764Z1010	HEX NUT M10-1.5
1011	P0764Z1011	CAP SCREW M10-1.5 X 25
1012	P0764Z1012	EXTENSION SPRING 2 X 15.8 X 60
1013	P0764Z1013	CAP SCREW M10-1.5 X 70
1014	P0764Z1014	HEX NUT M10-1.5
1015	P0764Z1015	FENDER WASHER 6MM
1016	P0764Z1016	LOCK WASHER 6MM
1017	P0764Z1017	CAP SCREW M6-1 X 16
1018	P0764Z1018	LOCK WASHER 14MM

Crosscut Swing-Arm

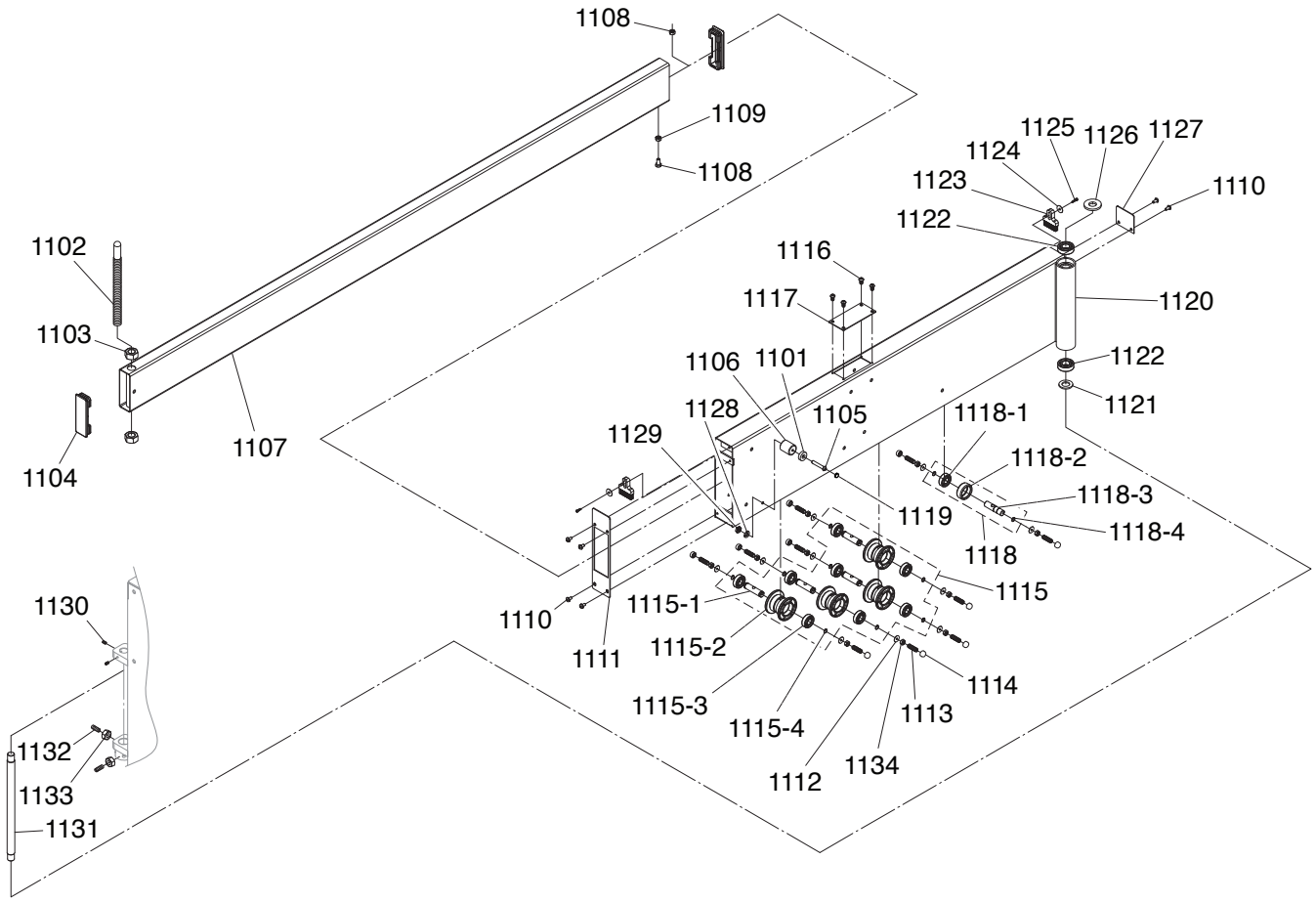

REF	PART #	DESCRIPTION
1101	P0764Z1101	MAGNETIC WASHER 5MM
1102	P0764Z1102	CROSSCUT FRAME PIVOT ROD M20-2.5 X 220
1103	P0764Z1103	HEX NUT M20-2.5
1104	P0764Z1104	TUBE END CAP
1105	P0764Z1105	FLAT HD SCR M5-.8 X 55
1106	P0764Z1106	SLEEVE 22MM
1107	P0764Z1107	SLIDING TUBE
1108	P0764Z1108	HEX BOLT M8-1.25 X 20
1109	P0764Z1109	HEX NUT M8-1.25
1110	P0764Z1110	BUTTON HD CAP SCR M6-1 X 10
1111	P0764Z1111	SWING ARM END CAP (LH)
1112	P0764Z1112	FLAT WASHER 8MM
1113	P0764Z1113	SET SCREW M8-1.25 X 25
1114	P0764Z1114	SET SCREW PROTECTIVE CAP 13MM
1115	P0764Z1115	TUBE ROLLER ASSEMBLY (LOWER)
1115-1	P0764Z1115-1	ROLLER SHAFT
1115-2	P0764Z1115-2	ROLLER
1115-3	P0764Z1115-3	BALL BEARING 6202ZZ
1115-4	P0764Z1115-4	EXT RETAINING RING 15MM
1116	P0764Z1116	BUTTON HD CAP SCR M5-.8 X 8
1117	P0764Z1117	SWING ARM TOP PLATE

REF	PART #	DESCRIPTION
1118	P0764Z1118	TUBE ROLLER ASSEMBLY (UPPER)
1118-1	P0764Z1118-1	BALL BEARING 6202ZZ
1118-2	P0764Z1118-2	ROLLER
1118-3	P0764Z1118-3	ROLLER SHAFT
1118-4	P0764Z1118-4	EXT RETAINING RING 15MM
1119	P0764Z1119	SCREW CAP
1120	P0764Z1120	SWING ARM
1121	P0764Z1121	FLAT WASHER 20MM
1122	P0764Z1122	BALL BEARING 6004ZZ
1123	P0764Z1123	BRUSH
1124	P0764Z1124	FLAT WASHER 6MM
1125	P0764Z1125	CAP SCREW M6-1 X 20
1126	P0764Z1126	FLAT WASHER 20MM
1127	P0764Z1127	SWING ARM END CAP (RH)
1128	P0764Z1128	LOCK WASHER 5MM
1129	P0764Z1129	HEX NUT M5-.8
1130	P0764Z1130	SET SCREW M10-1.5 X 10
1131	P0764Z1131	PIVOT SHAFT
1132	P0764Z1132	SET SCREW M10-1.5 X 20
1133	P0764Z1133	HEX NUT M10-1.5
1134	P0764Z1134	HEX NUT M8-1.25

Crosscut Table

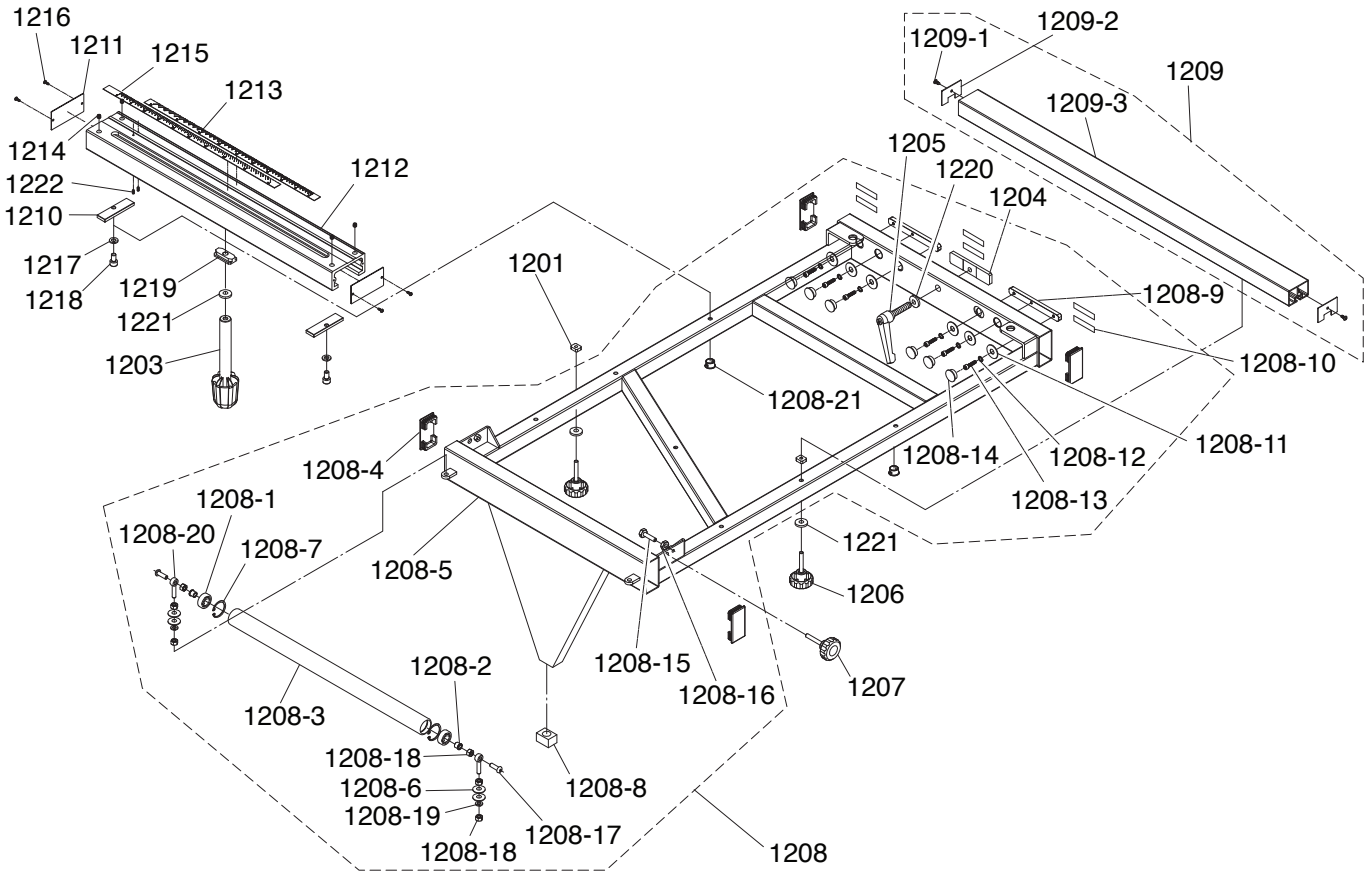

REF	PART #	DESCRIPTION
1201	P0764Z1201	T-SLOT NUT M8-1.25
1203	P0764Z1203	FENCE LOCK HANDLE
1204	P0764Z1204	FRAME T-SLOT CLAMP BLOCK
1205	P0764Z1205	ADJUSTMENT HANDLE M12-1.75 X 55
1206	P0764Z1206	KNOB BOLT M8-1.25 X 50
1207	P0764Z1207	KNOB BOLT M8-1.25 X 50
1208	P0764Z1208	CROSSCUT TABLE ASSEMBLY
1208-1	P0764Z1208-1	BALL BEARING 6201ZZ
1208-2	P0764Z1208-2	BUSHING
1208-3	P0764Z1208-3	ROLLER
1208-4	P0764Z1208-4	FRAME END CAP
1208-5	P0764Z1208-5	CROSSCUT TABLE FRAME
1208-6	P0764Z1208-6	FLAT WASHER 8MM
1208-7	P0764Z1208-7	INT RETAINING RING 32MM
1208-8	P0764Z1208-8	CROSSCUT FRAME PIVOT BLOCK
1208-9	P0764Z1208-9	T-SLOT ALIGNMENT PLATE
1208-10	P0764Z1208-10	CUSHION PAD 55MM
1208-11	P0764Z1208-11	FLAT WASHER 6MM
1208-12	P0764Z1208-12	LOCK WASHER 6MM
1208-13	P0764Z1208-13	BUTTON HD CAP SCR M6-1 X 16
1208-14	P0764Z1208-14	PROTECTIVE CAP
1208-15	P0764Z1208-15	HEX BOLT M8-1.25 X 30
1208-16	P0764Z1208-16	HEX NUT M8-1.25

REF	PART #	DESCRIPTION
1208-17	P0764Z1208-17	BUTTON HD CAP SCR M8-1.25 X 25
1208-18	P0764Z1208-18	HEX NUT M8-1.25
1208-19	P0764Z1208-19	LOCK WASHER 8MM
1208-20	P0764Z1208-20	SOLID ROD END M8-1.25 X 40
1208-21	P0764Z1208-21	FRAME PLUG HP-16
1209	P0764Z1209	FRAME LONG BRACE ASSEMBLY
1209-1	P0764Z1209-1	TAP SCREW #8 X 3/8
1209-2	P0764Z1209-2	BRACE END CAP
1209-3	P0764Z1209-3	FRAME LONG BRACE
1210	P0764Z1210	BRACE ALIGNMENT PLATE
1211	P0764Z1211	BRACE END CAP
1212	P0764Z1212	FRAME SHORT BRACE
1213	P0764Z1213	ANGLE SCALE (RH)
1214	P0764Z1214	SET SCREW M5-.8 X 10
1215	P0764Z1215	ANGLE SCALE (LH)
1216	P0764Z1216	TAP SCREW #8 X 3/8
1217	P0764Z1217	LOCK WASHER 8MM
1218	P0764Z1218	CAP SCREW M8-1.25 X 25
1219	P0764Z1219	BRACE T-SLOT LOCK CLAMP
1220	P0764Z1220	FLAT WASHER 12MM
1221	P0764Z1221	FLAT WASHER 8MM
1222	P0764Z1222	SET SCREW M5-.8 X 5

Crosscut Fence

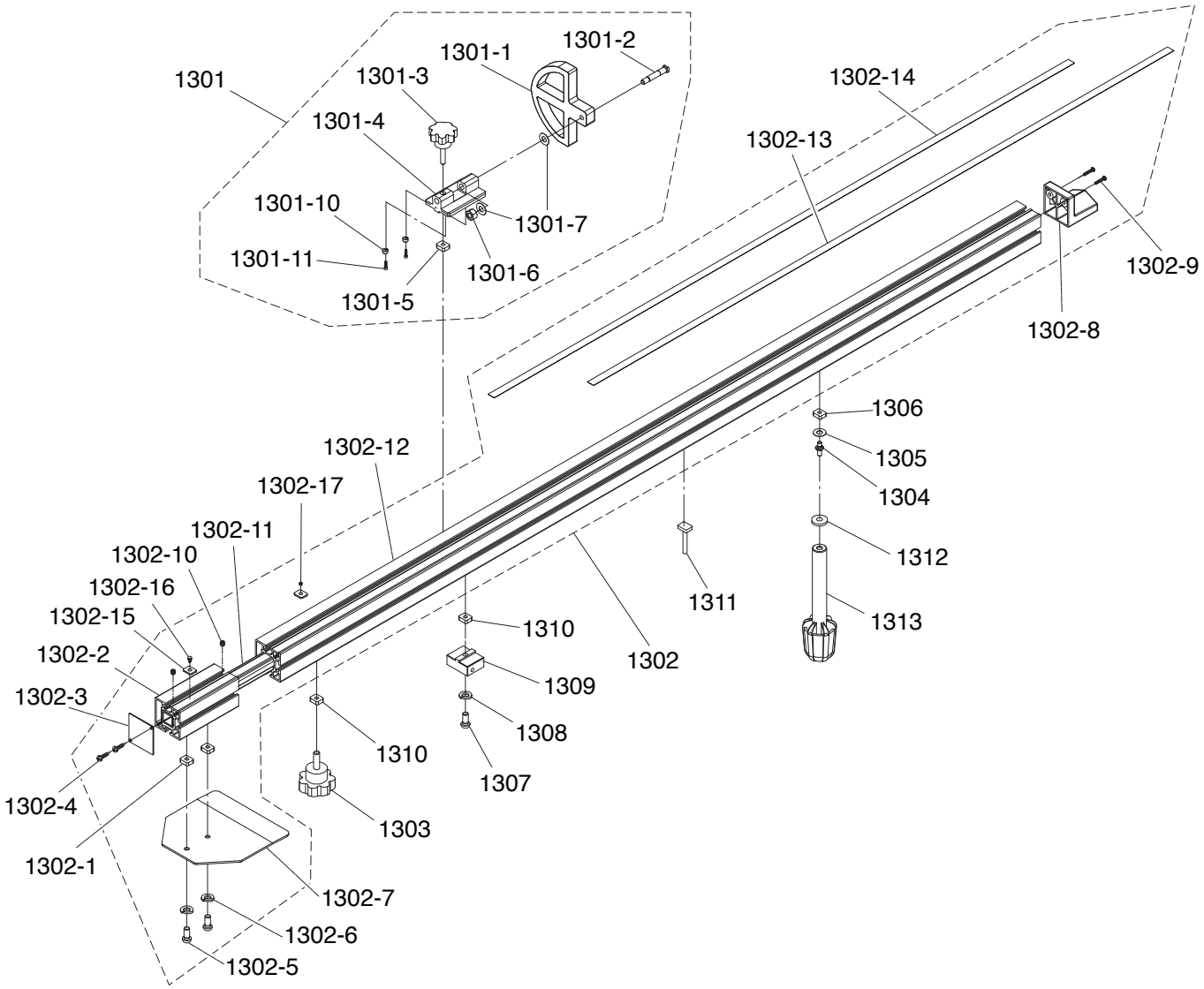

REF	PART #	DESCRIPTION
1301	P0764Z1301	FLIP STOP ASSEMBLY
1301-1	P0764Z1301-1	FLIP STOP
1301-2	P0764Z1301-2	PIVOT SHAFT
1301-3	P0764Z1301-3	KNOB BOLT M8-1.25 X 40
1301-4	P0764Z1301-4	FLIP STOP BRACKET
1301-5	P0764Z1301-5	T-SLOT NUT M8-1.25
1301-6	P0764Z1301-6	LOCK NUT M10-1.5
1301-7	P0764Z1301-7	FLAT WASHER 10MM (COPPER)
1301-10	P0764Z1301-10	SLEEVE
1301-11	P0764Z1301-11	CAP SCREW M3-.5 X 12
1302	P0764Z1302	CROSSCUT FENCE ASSEMBLY
1302-1	P0764Z1302-1	T-SLOT NUT M8-1.25
1302-2	P0764Z1302-2	CROSSCUT EXTENSION FENCE
1302-3	P0764Z1302-3	EXTENSION FENCE END CAP
1302-4	P0764Z1302-4	TAP SCREW M4 X 10
1302-5	P0764Z1302-5	BUTTON HD CAP SCR M8-1.25 X 16
1302-6	P0764Z1302-6	LOCK WASHER 8MM
1302-7	P0764Z1302-7	STOCK SUPPORT PLATE
1302-8	P0764Z1302-8	CROSSCUT MAIN FENCE END CAP
1302-9	P0764Z1302-9	PHLP HD SCR M4-.7 X 10

REF	PART #	DESCRIPTION
1302-10	P0764Z1302-10	SET SCREW M6-1 X 6
1302-11	P0764Z1302-11	EXTENSION FENCE CONNECTOR ROD
1302-12	P0764Z1302-12	CROSSCUT MAIN FENCE
1302-13	P0764Z1302-13	FENCE SCALE 3"-72"
1302-14	P0764Z1302-14	FENCE SCALE 74"-134"
1302-15	P0764Z1302-15	T-SLOT NUT M5-.8 (THIN)
1302-16	P0764Z1302-16	CAP SCREW M5-.8 X 6
1302-17	P0764Z1302-17	SET SCREW M5-.8 X 5
1303	P0764Z1303	KNOB BOLT M8-1.25 X 25
1304	P0764Z1304	FENCE PIVOT PIN
1305	P0764Z1305	FLAT WASHER 8MM (FIBER)
1306	P0764Z1306	T-SLOT NUT M8-1.25
1307	P0764Z1307	CAP SCREW M8-1.25 X 35
1308	P0764Z1308	LOCK WASHER 8MM
1309	P0764Z1309	FLIP STOP CLAMP BLOCK
1310	P0764Z1310	T-SLOT NUT M8-1.25
1311	P0764Z1311	T-SLOT BOLT M8-1.25 X 35
1312	P0764Z1312	FENDER WASHER 8MM
1313	P0764Z1313	FENCE LOCK HANDLE

Rip Fence

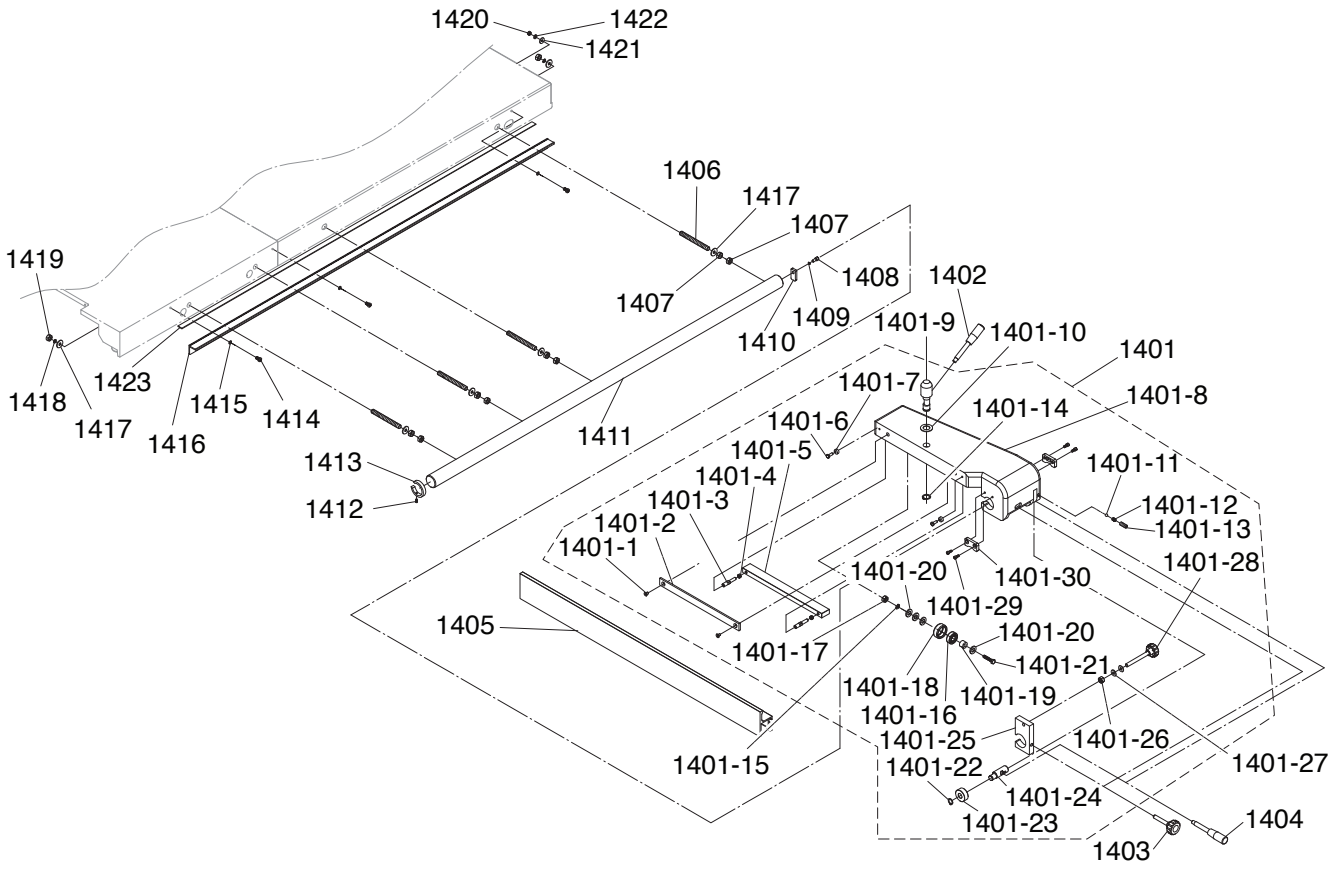

REF	PART #	DESCRIPTION
1401	P0764Z1401	RIP FENCE ASSEMBLY
1401-1	P0764Z1401-1	FLAT HD SCR M6-1 X 16
1401-2	P0764Z1401-2	FENCE T-SLOT PLATE
1401-3	P0764Z1401-3	THREADED SHAFT M8-1.25 X 16
1401-4	P0764Z1401-4	LOCK NUT M8-1.25
1401-5	P0764Z1401-5	ALIGNMENT PLATE
1401-6	P0764Z1401-6	HEX BOLT M6-1 X 16
1401-7	P0764Z1401-7	ECCENTRIC RING
1401-8	P0764Z1401-8	RIP FENCE BODY
1401-9	P0764Z1401-9	ECCENTRIC SHAFT
1401-10	P0764Z1401-10	FLAT WASHER 20MM
1401-11	P0764Z1401-11	STEEL BALL 8MM
1401-12	P0764Z1401-12	COMPRESSION SPRING
1401-13	P0764Z1401-13	SET SCREW M10-1.5 X 10
1401-14	P0764Z1401-14	EXT RETAINING RING 20MM
1401-15	P0764Z1401-15	LOCK WASHER 8MM
1401-16	P0764Z1401-16	BALL BEARING 6202ZZ
1401-17	P0764Z1401-17	HEX NUT M8-1.25
1401-18	P0764Z1401-18	SPACER
1401-19	P0764Z1401-19	BUSHING
1401-20	P0764Z1401-20	FLAT WASHER 8MM
1401-21	P0764Z1401-21	HEX BOLT M8-1.25 X 35
1401-22	P0764Z1401-22	EXT RETAINING RING 15MM
1401-23	P0764Z1401-23	SPACER
1401-24	P0764Z1401-24	RAIL LOCK SHAFT
1401-25	P0764Z1401-25	FENCE RAIL BRACKET
1401-26	P0764Z1401-26	LOCK NUT M10-1.5

REF	PART #	DESCRIPTION
1401-27	P0764Z1401-27	FLAT WASHER 10MM
1401-28	P0764Z1401-28	KNOB BOLT M10-1.5 X 110
1401-29	P0764Z1401-29	CAP SCREW M6-1 X 10
1401-30	P0764Z1401-30	RAIL WIPER
1402	P0764Z1402	FENCE LOCK LEVER
1403	P0764Z1403	KNOB BOLT M10-1.5 X 55
1404	P0764Z1404	RAIL LOCK LEVER
1405	P0764Z1405	FENCE 39-3/8" (ALUMINUM)
1406	P0764Z1406	STUD-FT M12-1.75 X 115
1407	P0764Z1407	HEX NUT M12-1.75
1408	P0764Z1408	CAP SCREW M8-1.25 X 16
1409	P0764Z1409	LOCK WASHER 8MM
1410	P0764Z1410	RAIL END PLATE (RH)
1411	P0764Z1411	RIP FENCE RAIL
1412	P0764Z1412	SET SCREW M6-1 X 10
1413	P0764Z1413	RAIL STOP RING
1414	P0764Z1414	BUTTON HD CAP SCR M6-1 X 12
1415	P0764Z1415	FLAT WASHER 6MM
1416	P0764Z1416	L-BRACKET
1417	P0764Z1417	FLAT WASHER 12MM
1418	P0764Z1418	LOCK WASHER 12MM
1419	P0764Z1419	HEX NUT M12-1.75
1420	P0764Z1420	HEX NUT M6-1
1421	P0764Z1421	FLAT WASHER 6MM
1422	P0764Z1422	LOCK WASHER 6MM
1423	P0764Z1423	RIP FENCE SCALE

Sliding Table

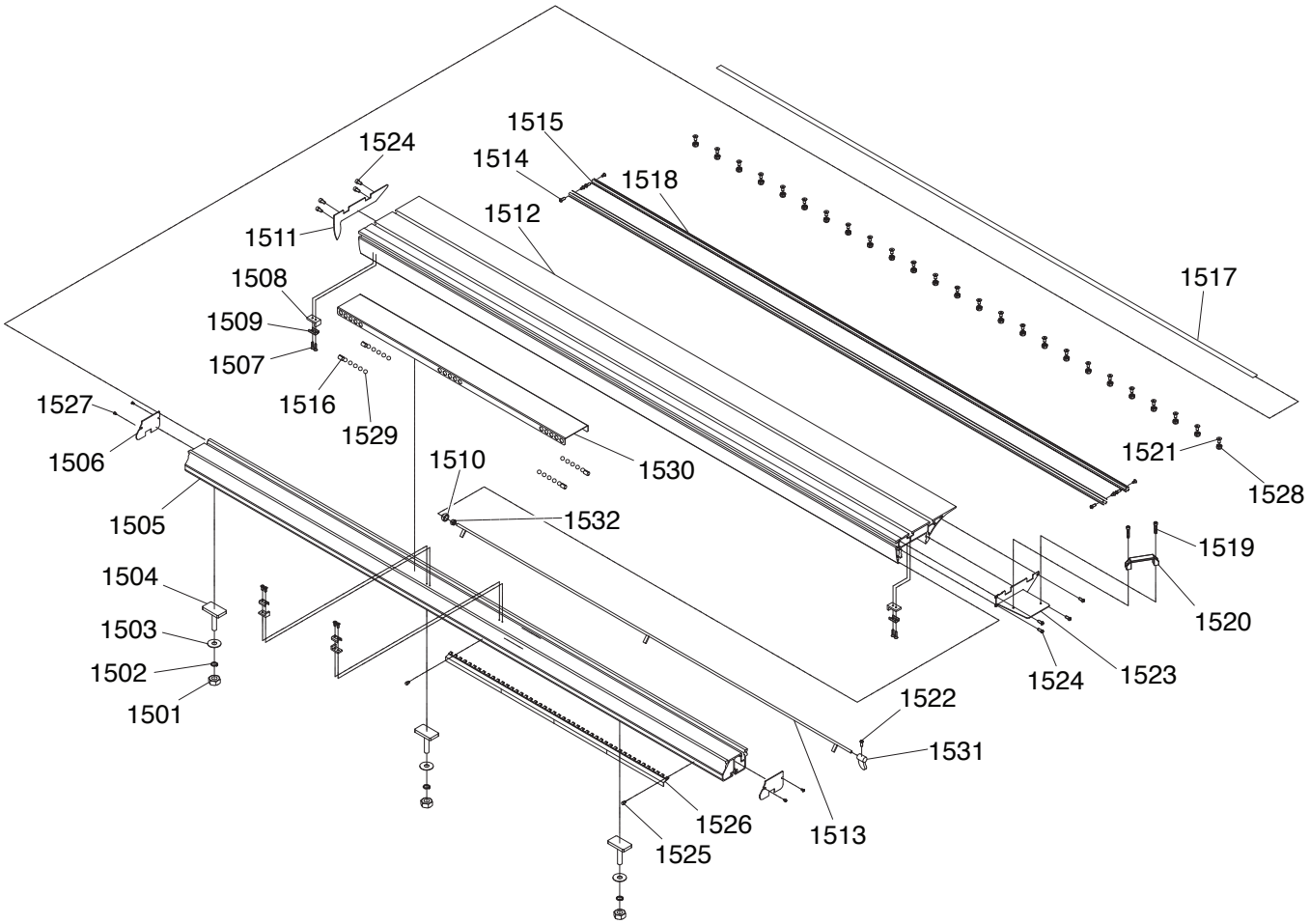

REF	PART #	DESCRIPTION
1501	P0764Z1501	HEX NUT M12-1.75
1502	P0764Z1502	LOCK WASHER 12MM
1503	P0764Z1503	FLAT WASHER 12MM
1504	P0764Z1504	T-SLOT BOLT M12-1.75 X 50
1505	P0764Z1505	SLIDING TABLE BASE
1506	P0764Z1506	SLIDING TABLE BASE END CAP
1507	P0764Z1507	FLAT HD SCR M6-1 X 30
1508	P0764Z1508	STOP BLOCK (RUBBER)
1509	P0764Z1509	STOP BLOCK BRACKET
1510	P0764Z1510	PROTECTIVE CAP
1511	P0764Z1511	SLIDING TABLE END CAP (REAR)
1512	P0764Z1512	SLIDING TABLE
1513	P0764Z1513	LOCK ROD
1514	P0764Z1514	BUTTON HD CAP SCR M6-1 X 10
1515	P0764Z1515	STEEL RAIL
1516	P0764Z1516	COTTON PAD

REF	PART #	DESCRIPTION
1517	P0764Z1517	COVER STRIP
1518	P0764Z1518	ADHESIVE STRIP
1519	P0764Z1519	CAP SCREW M8-1.25 X 12
1520	P0764Z1520	SLIDING TABLE HANDLE
1521	P0764Z1521	FLAT HD CAP SCR M10-1.5 X 20
1522	P0764Z1522	BUTTON HD CAP SCR M5-.8 X 10
1523	P0764Z1523	SLIDING TABLE END CAP (FRONT)
1524	P0764Z1524	BUTTON HD CAP SCR M6-1 X 12
1525	P0764Z1525	BUTTON HD CAP SCR M6-1 X 16
1526	P0764Z1526	NOTCHED LOCK PLATE
1527	P0764Z1527	TAP SCREW M4 X 10
1528	P0764Z1528	LOCK NUT M10-1.5
1529	P0764Z1529	STEEL BALL BEARING 16.6MM
1530	P0764Z1530	SLIDING PLATE
1531	P0764Z1531	LOCK ROD HANDLE
1532	P0764Z1532	LOCK NUT M10-1.5

Blade Guard

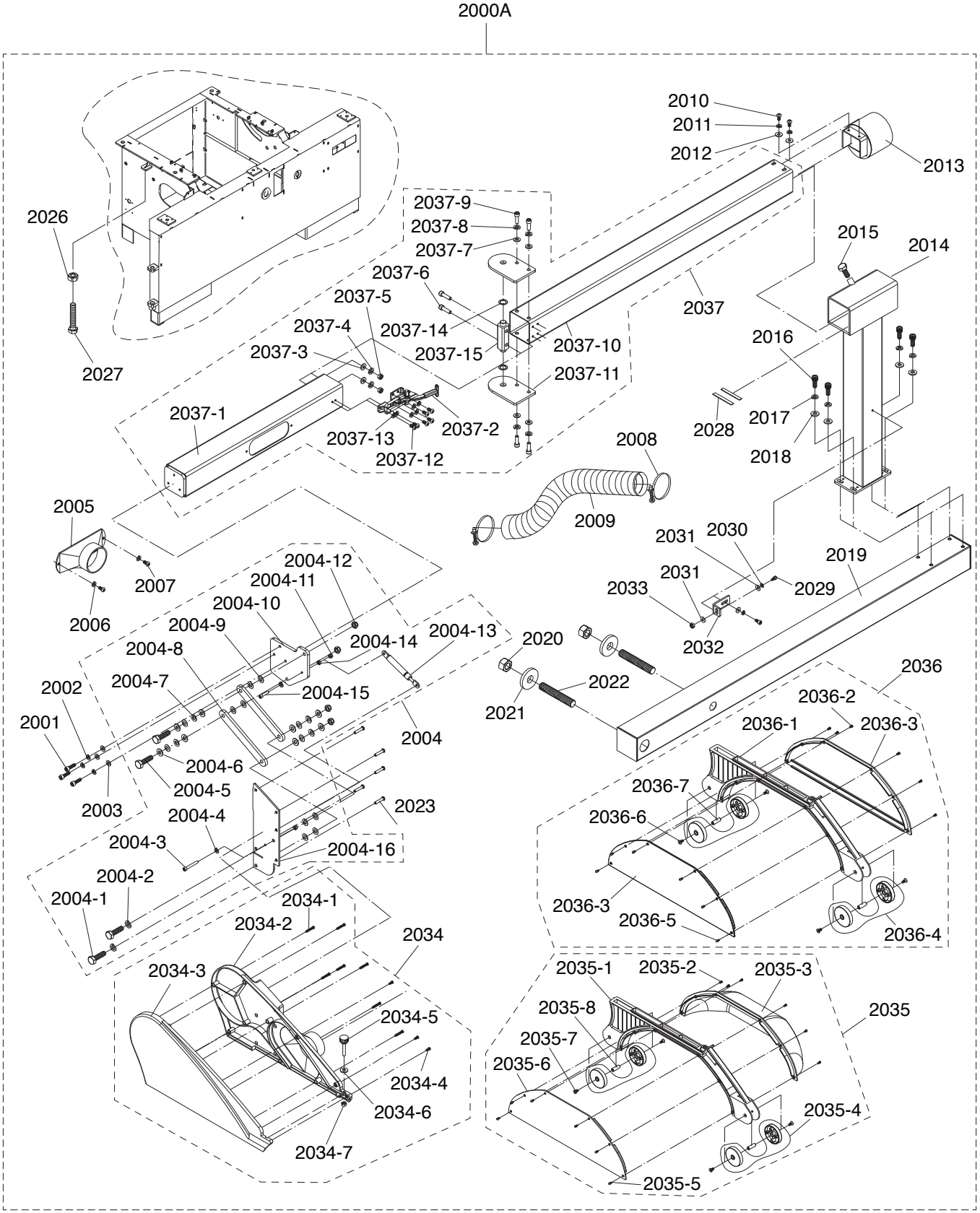
2000A
2010
2011
2012
2013
2026
2027
2037-9
2037-8
2037-7
2037-6
2037-5
2037-4
2037-3
2037-14
2037-15
2037-10
2037-11
2037
2015
2014
2016
2028
2017
2018
2037-1
2037-13
2037-2
2037-12
2008
2009
2005
2007
2006
2031
2030
2019
2031
2033
2029
2032
2004-12
2004-11
2004-10
2004-9
2004-8
2004-7
2004-14
2004-13
2004-15
2004
2020
2022
2021
2036
2036-2
2036-1
2036-3
2002
2001
2004-6
2004-5
2003
2036-7
2036-6
2023
2004-4
2004-3
2004-16
2036-3
2036-5
2036-4
2004-2
2004-1
2034-1
2034-2
2034
2034-3
2034-5
2034-4
2034-6
2034-7
2035-1
2035-2
2035-3
2035
2035-8
2035-7
2035-6
2035-4
2035-5

Blade Guard Parts List

REF	PART #	DESCRIPTION
2000A	P0764Z2000A	BLADE GUARD ASSY V2.10.16
2001	P0764Z2001	CAP SCREW M6-1 X 20
2002	P0764Z2002	LOCK WASHER 6MM
2003	P0764Z2003	FLAT WASHER 6MM
2004	P0764Z2004	HOOD MOUNTING BRACKET ASSY
2004-1	P0764Z2004-1	HEX BOLT M10-1.5 X 35
2004-2	P0764Z2004-2	LOCK WASHER 10MM
2004-3	P0764Z2004-3	CAP SCREW M6-1 X 45
2004-4	P0764Z2004-4	LOCK WASHER 6MM
2004-5	P0764Z2004-5	HEX BOLT M10-1.5 X 35
2004-6	P0764Z2004-6	FLAT WASHER 10MM
2004-7	P0764Z2004-7	FLAT WASHER 10MM NYLON
2004-8	P0764Z2004-8	PIVOT LINKAGE BAR
2004-9	P0764Z2004-9	FLAT WASHER 10MM COPPER
2004-10	P0764Z2004-10	ARM MOUNTING PLATE
2004-11	P0764Z2004-11	LOCK NUT M6-1
2004-12	P0764Z2004-12	LOCK NUT M10-1.5
2004-13	P0764Z2004-13	GAS RETURN SPRING
2004-14	P0764Z2004-14	HEX NUT M6-1
2004-15	P0764Z2004-15	CAP SCREW M6-1 X 25
2004-16	P0764Z2004-16	DUST HOOD MOUNTING PLATE
2005	P0764Z2005	DUST PORT 3"
2006	P0764Z2006	LOCK WASHER 6MM
2007	P0764Z2007	CAP SCREW M6-1 X 12
2008	P0764Z2008	HOSE CLAMP 3-1/4"
2009	P0764Z2009	DUST HOSE 3" X 16-1/2"
2010	P0764Z2010	CAP SCREW M6-1 X 12
2011	P0764Z2011	LOCK WASHER 6MM
2012	P0764Z2012	FLAT WASHER 6MM
2013	P0764Z2013	DUST PORT ARM ADAPTER 4"
2014	P0764Z2014	ARM SUPPORT PEDESTAL
2015	P0764Z2015	HEX BOLT M10-1.5 X 30
2016	P0764Z2016	CAP SCREW M8-1.25 X 25
2017	P0764Z2017	LOCK WASHER 8MM
2018	P0764Z2018	FLAT WASHER 8MM
2019	P0764Z2019	ARM SUPPORT BASE
2020	P0764Z2020	HEX NUT M20-2.5
2021	P0764Z2021	FLAT WASHER 20MM
2022	P0764Z2022	STUD-FT M20-2.5 X 130
2023	P0764Z2023	BUTTON HD CAP SCR M6-1 X 30
2026	P0764Z2026	HEX NUT M12-1.75
2027	P0764Z2027	HEX BOLT M12-1.75 X 70
2028	P0764Z2028	SKID PAD
2029	P0764Z2029	CAP SCREW M6-1 X 20
2030	P0764Z2030	LOCK WASHER 6MM

REF	PART #	DESCRIPTION
2031	P0764Z2031	FLAT WASHER 6MM
2032	P0764Z2032	MOUNTING BRACKET
2033	P0764Z2033	HEX NUT M6-1
2034	P0764Z2034	DUST HOOD ASSY
2034-1	P0764Z2034-1	TAP SCREW M3.5 X 25
2034-2	P0764Z2034-2	HOOD REAR COVER
2034-3	P0764Z2034-3	HOOD FRONT COVER
2034-4	P0764Z2034-4	TAP SCREW M4 X 10
2034-5	P0764Z2034-5	KNURLED KNOB M8-1.25 X 30
2034-6	P0764Z2034-6	FLAT WASHER 8MM
2034-7	P0764Z2034-7	HEX NUT M8-1.25
2035	P0764Z2035	BLADE GUARD ASSY (WIDE)
2035-1	P0764Z2035-1	BLADE GUARD BODY
2035-2	P0764Z2035-2	FLANGE SCREW M4-.7 X 10
2035-3	P0764Z2035-3	GUARD COVER (WIDE)
2035-4	P0764Z2035-4	ROLLER
2035-5	P0764Z2035-5	FLANGE SCREW M4-.7 X 10
2035-6	P0764Z2035-6	GUARD COVER (FLAT)
2035-7	P0764Z2035-7	FLAT HD CAP SCR M6-1 X 10
2035-8	P0764Z2035-8	ROLLER SHAFT
2036	P0764Z2036	BLADE GUARD ASSY (NARROW)
2036-1	P0764Z2036-1	BLADE GUARD BODY
2036-2	P0764Z2036-2	FLANGE SCREW M4-.7 X10
2036-3	P0764Z2036-3	GUARD COVER (FLAT)
2036-4	P0764Z2036-4	ROLLER
2036-5	P0764Z2036-5	FLANGE SCREW M4-.7 X10
2036-6	P0764Z2036-6	FLAT HD CAP SCR M6-1 X 10
2036-7	P0764Z2036-7	ROLLER SHAFT
2037	P0764Z2037	UPPER SUPPORT ARM ASSY
2037-1	P0764Z2037-1	UPPER SUPPORT ARM (SHORT)
2037-2	P0764Z2037-2	ELBOW CLAMP
2037-3	P0764Z2037-3	FLAT WASHER 8MM
2037-4	P0764Z2037-4	LOCK WASHER 8MM
2037-5	P0764Z2037-5	HEX NUT M8-1.25
2037-6	P0764Z2037-6	CAP SCREW M8-1.25 X 30
2037-7	P0764Z2037-7	FLAT WASHER 8MM
2037-8	P0764Z2037-8	LOCK WASHER 8MM
2037-9	P0764Z2037-9	CAP SCREW M8-1.25 X 25
2037-10	P0764Z2037-10	UPPER SUPPORT ARM (LONG)
2037-11	P0764Z2037-11	PIVOT PLATE
2037-12	P0764Z2037-12	CAP SCREW M6-1 X 10
2037-13	P0764Z2037-13	LOCK WASHER 6MM
2037-14	P0764Z2037-14	FLAT WASHER 16MM COPPER
2037-15	P0764Z2037-15	PIVOT SHAFT

Sliding Table Accessories

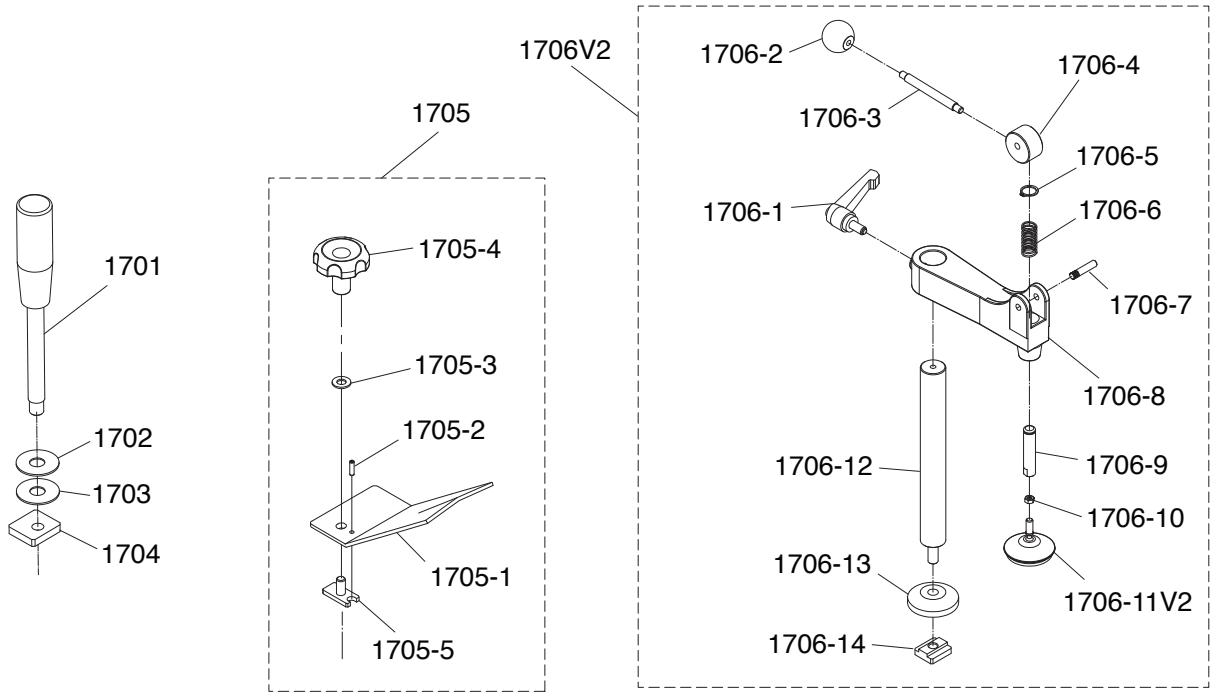

REF	PART #	DESCRIPTION
1701	P0764Z1701	HANDLE M12-1.75 X 20
1702	P0764Z1702	FLAT WASHER 12MM
1703	P0764Z1703	FLAT WASHER 12MM (COPPER)
1704	P0764Z1704	T-SLOT NUT M12-1.75
1705	P0764Z1705	EDGE SHOE ASSEMBLY
1705-1	P0764Z1705-1	EDGE SHOE PLATE
1705-2	P0764Z1705-2	ROLL PIN 5 X 16
1705-3	P0764Z1705-3	FLAT WASHER 10MM
1705-4	P0764Z1705-4	KNOB M10-1.5
1705-5	P0764Z1705-5	T-SLOT BOLT M10-1.5 X 25
1706V2	P0764Z1706V2	HOLD DOWN ASSEMBLY V2.10.17
1706-1	P0764Z1706-1	ADJUSTABLE HANDLE M10-1.5 X 25
1706-2	P0764Z1706-2	ROUND KNOB M8-1.25

REF	PART #	DESCRIPTION
1706-3	P0764Z1706-3	STUD-DE M8-1.25 X 100, 10
1706-4	P0764Z1706-4	CAM
1706-5	P0764Z1706-5	EXT RETAINING RING 14MM
1706-6	P0764Z1706-6	COMPRESSION SPRING
1706-7	P0764Z1706-7	FLUTED PIVOT PIN
1706-8	P0764Z1706-8	HOLD-DOWN BRACKET
1706-9	P0764Z1706-9	HOLD-DOWN SHAFT
1706-10	P0764Z1706-10	HEX NUT 5/16-18
1706V2-11V2	P0764Z1706V2-11V2	HOLD-DOWN PAD V2.8.17
1706-12	P0764Z1706-12	SUPPORT SHAFT
1706-13	P0764Z1706-13	SHAFT BASE
1706-14	P0764Z1706-14	T-SLOT NUT M12-1.75

Electrical

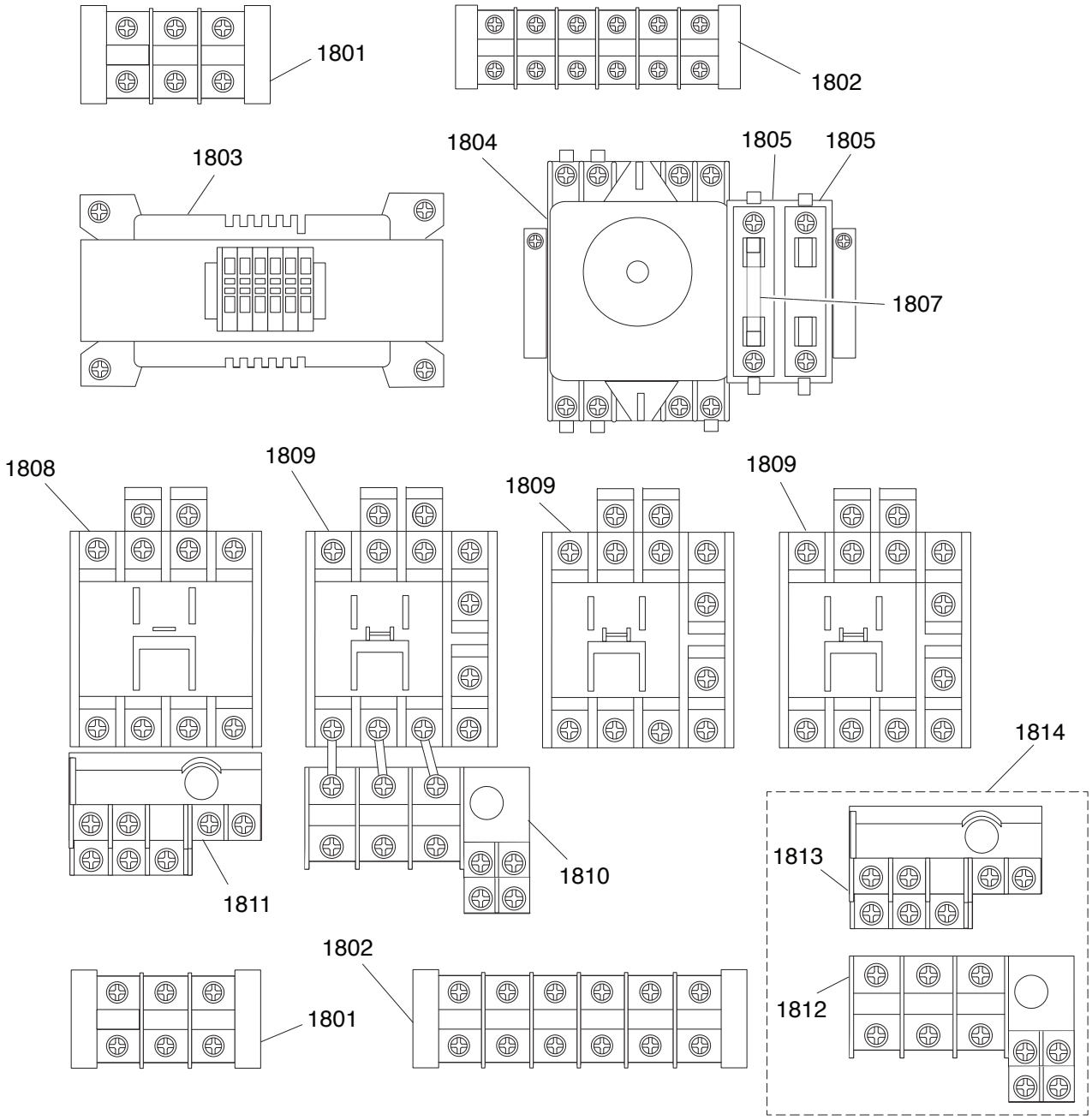

REF	PART #	DESCRIPTION
1801	P0764Z1801	TERMINAL BAR 3P
1802	P0764Z1802	TERMINAL BAR 6P
1803	P0764Z1803	TRANSFORMER LCE TBSM-1000040 0-440V
1804	P0764Z1804	TIMER FOTEK H3-TRD-30S
1805	P0764Z1805	FUSE BLOCK
1807	P0764Z1807	FUSE 2A , GLASS
1808	P0764Z1808	CONTACTOR SHIHLIN S-P11 24V

REF	PART #	DESCRIPTION
1809	P0764Z1809	CONTACTOR SHIHLIN S-P21 24V
1810	P0764Z1810	OL RELAY SHIHLIN TH-P20 22-34A
1811	P0764Z1811	OL RELAY SHIHLIN TH-P12 2.5-4.1A
1812	P0764Z1812	OL RELAY SHIHLIN TH-P20 12-18A
1813	P0764Z1813	OL RELAY SHIHLIN TH-P12 1.3-2.1A
1814	P0764Z1814	440V CONVERSION KIT

Labels & Cosmetics

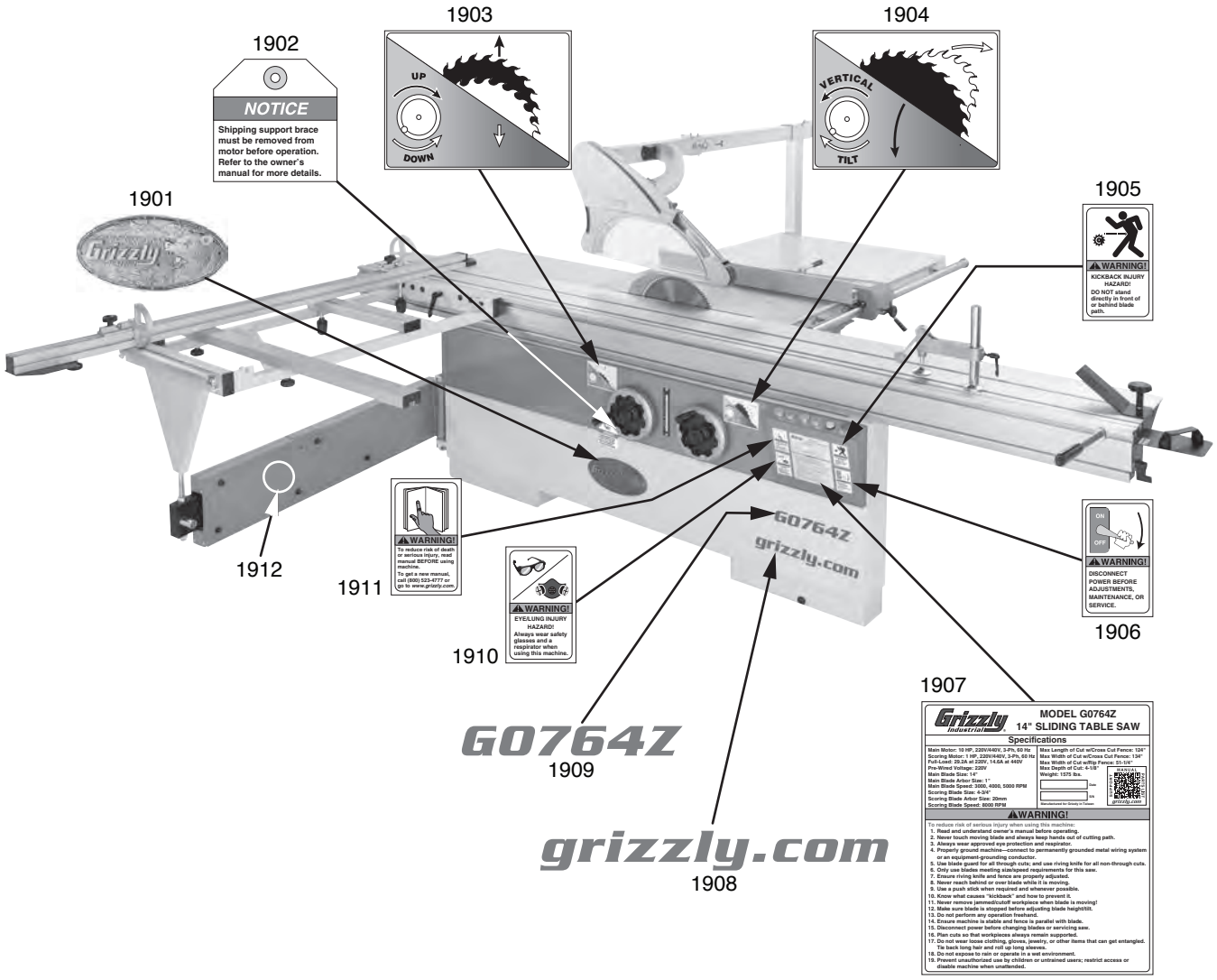

REF	PART #	DESCRIPTION
1901	P0764Z1901	GRIZZLY NAMEPLATE-LARGE
1902	P0764Z1902	SHIPPING BRACE NOTICE LABEL
1903	P0764Z1903	BLADE ELEVATION LABEL
1904	P0764Z1904	BLADE TILT LABEL
1905	P0764Z1905	KICKBACK WARNING LABEL
1906	P0764Z1906	DISCONNECT POWER LABEL

REF	PART #	DESCRIPTION
1907	P0764Z1907	MACHINE ID LABEL
1908	P0764Z1908	GRIZZLY.COM LABEL
1909	P0764Z1909	MODEL NUMBER LABEL
1910	P0764Z1910	GLASSES/RESPIRATOR LABEL
1911	P0764Z1911	READ MANUAL LABEL
1912	P0764Z1912	TOUCH-UP PAINT, GRIZZLY GREEN

⚠WARNING

Safety labels help reduce the risk of serious injury caused by machine hazards. If any label comes off or becomes unreadable, the owner of this machine MUST replace it in the original location before resuming operations. For replacements, contact (800) 523-4777 or www.grizzly.com.

Labels & Cosmetics (Cont.)

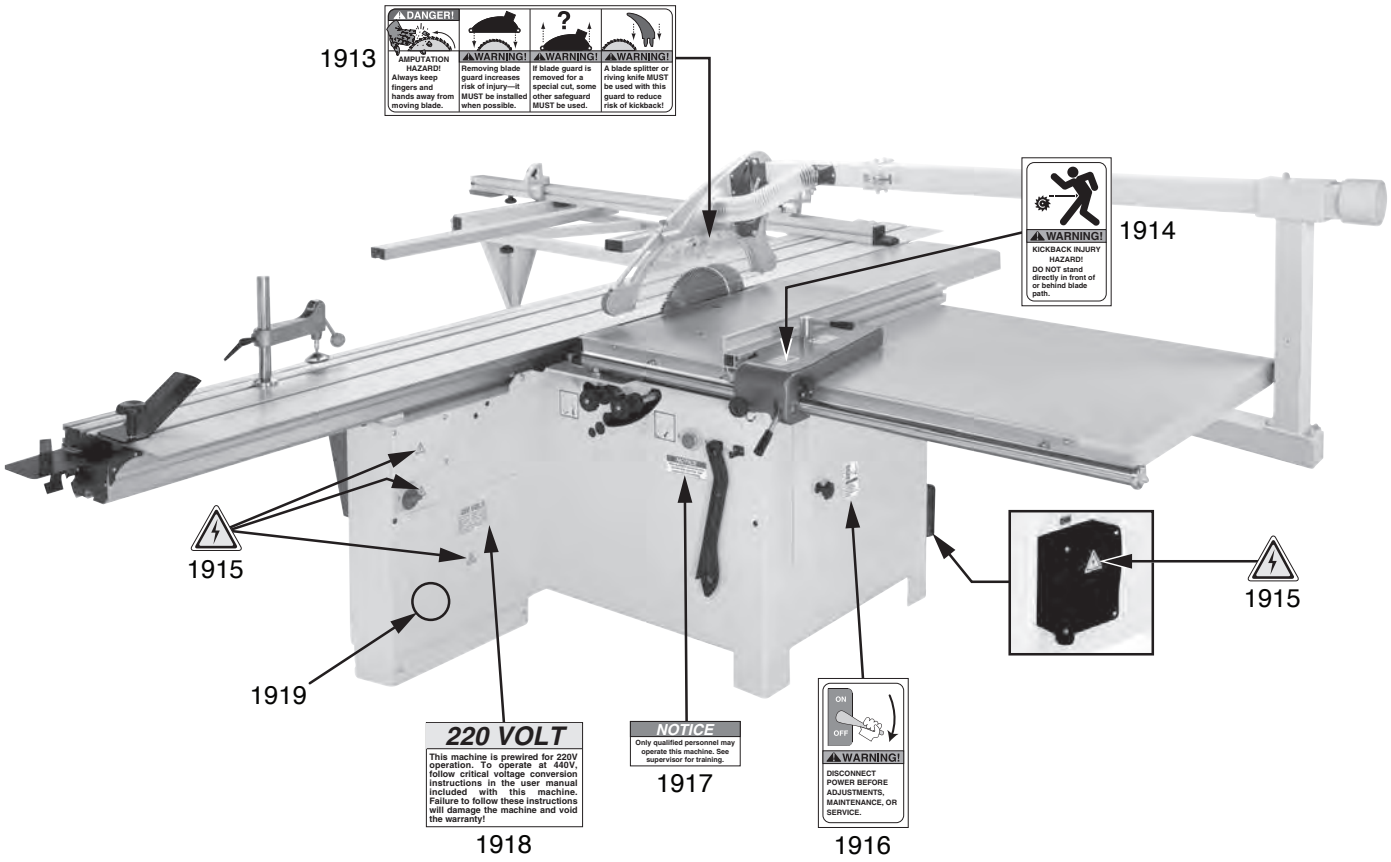

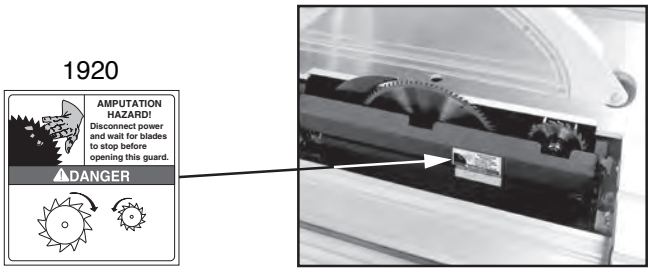

REF	PART #	DESCRIPTION
1913	P0764Z1913	TABLE SAW BLADE GUARD LABEL
1914	P0764Z1914	KICKBACK WARNING LABEL
1915	P0764Z1915	ELECTRICITY LABEL
1916	P0764Z1916	DISCONNECT POWER LABEL

REF	PART #	DESCRIPTION
1917	P0764Z1917	QUALIFIED PERSONNEL NOTICE LABEL
1918	P0764Z1918	220V LABEL
1919	P0764Z1919	TOUCH-UP PAINT, GREY PUTTY
1920	P0764Z1920	AMPUTATION DANGER LABEL

⚠WARNING

Safety labels help reduce the risk of serious injury caused by machine hazards. If any label comes off or becomes unreadable, the owner of this machine MUST replace it in the original location before resuming operations. For replacements, contact (800) 523-4777 or www.grizzly.com.