MODEL G0764Z
14" SLIDING TABLE SAW
OWNER'S MANUAL
(For models manufactured since 05/18)

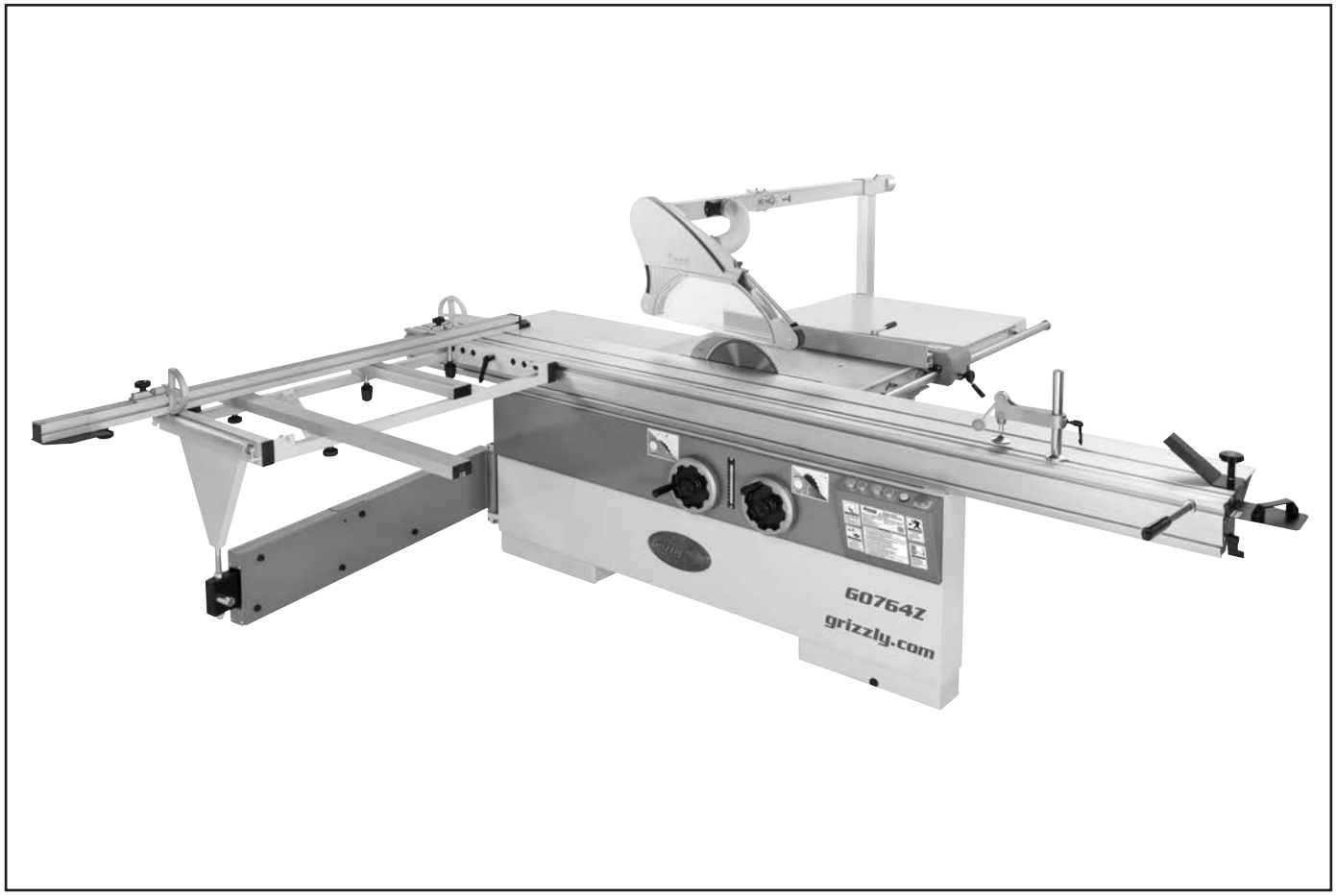

COPYRIGHT © AUGUST, 2016 BY GRIZZLY INDUSTRIAL, INC. REVISED JUNE, 2022 (BL)
WARNING: NO PORTION OF THIS MANUAL MAY BE REPRODUCED IN ANY SHAPE OR FORM WITHOUT THE WRITTEN APPROVAL OF GRIZZLY INDUSTRIAL, INC.
#MN17972 PRINTED IN TAIWAN V3.06.22

⚠ WARNING!

This manual provides critical safety instructions on the proper setup, operation, maintenance, and service of this machine/tool. Save this document, refer to it often, and use it to instruct other operators.

Failure to read, understand and follow the instructions in this manual may result in fire or serious personal injury—including amputation, electrocution, or death.

The owner of this machine/tool is solely responsible for its safe use. This responsibility includes but is not limited to proper installation in a safe environment, personnel training and usage authorization, proper inspection and maintenance, manual availability and comprehension, application of safety devices, cutting/sanding/grinding tool integrity, and the usage of personal protective equipment.

The manufacturer will not be held liable for injury or property damage from negligence, improper training, machine modifications or misuse.

⚠ WARNING!

Some dust created by power sanding, sawing, grinding, drilling, and other construction activities contains chemicals known to the State of California to cause cancer, birth defects or other reproductive harm. Some examples of these chemicals are:

- **Lead from lead-based paints.**
- **Crystalline silica from bricks, cement and other masonry products.**
- **Arsenic and chromium from chemically-treated lumber.**

Your risk from these exposures varies, depending on how often you do this type of work. To reduce your exposure to these chemicals: Work in a well ventilated area, and work with approved safety equipment, such as those dust masks that are specially designed to filter out microscopic particles.

Table of Contents

INTRODUCTION 2
- Machine Description 2
- Contact Info 2
- Manual Accuracy 2
- Controls & Components 3
- Glossary Of Terms 6
- Sliding Table Saw Capacities 7
- Machine Data Sheet 8

SECTION 1: SAFETY 11
- Safety Instructions for Machinery 11
- Additional Safety for Sliding Table Saws 13
- Preventing Kickback 14
- Protecting Yourself From Kickback 14

SECTION 2: POWER SUPPLY 15
- 440V Conversion 16

SECTION 3: SETUP 18
- Needed for Setup 18
- Unpacking 18
- Hardware Recognition Chart 19
- Inventory 20
- Cleanup 22
- Site Considerations 23
- Lifting & Placing Saw 24
- Assembly 25
- Dust Collection 38
- Power Connection 39
- Test Run 41
- Recommended Adjustments 42

SECTION 4: OPERATIONS 43
- Operation Overview 43
- Workpiece Inspection 44
- Through & Non-Through Cuts 44
- Blade Guard 45
- Riving Knife 46
- Blade Requirements 47
- Blade Selection 47
- Changing Speed 49
- Changing Main Blade 50
- Replacing & Aligning Scoring Blade 51
- Setting Up Crosscut Fence 54
- Rip Cutting 57
- Crosscutting 59
- Miter Cutting 61
- Dado Cutting 62
- Rabbet Cutting 63
- Narrow-Rip Auxiliary Fence & Push Block 64

SECTION 5: ACCESSORIES 66

SECTION 6: MAINTENANCE 68
- Schedule 68
- Cleaning & Protecting 68
- Lubrication 69

SECTION 7: SERVICE 70
- Troubleshooting 70
- Belt Service 72
- Blade Tilt Calibration 74
- Sliding Table Parallel Adjustment 75
- Sliding Table Movement Adjustment 76
- Squaring Crosscut Fence to Blade 76
- Riving Knife Mounting Block 78
- Calibrating Rip Fence 79

SECTION 8: WIRING 80
- Wiring Safety Instructions 80
- Wiring Overview 81
- Component Location Index 82
- Control Panel Wiring 83
- 220V Electrical Panel Wiring 84
- 440V Electrical Panel Wiring 85
- Scoring Motor Wiring 87
- Main Motor Wiring 88
- Master Power Switch Wiring 89

SECTION 9: PARTS 90
- Body 90
- Main Tables 92
- Control Panel 93
- Blade Enclosure 94
- Main Motor 95
- Main Blade Arbor 96
- Blade Tilt System 97
- Blade Elevation System 98
- Scoring Blade Arbor 99
- Scoring Blade Adjustment System 100
- Scoring Blade Motor 101
- Crosscut Swing-Arm 102
- Crosscut Table 103
- Crosscut Fence 104
- Rip Fence 105
- Sliding Table 106
- Blade Guard 107
- Sliding Table Accessories 109
- Electrical 110
- Labels & Cosmetics 111

WARRANTY & RETURNS 113

INTRODUCTION

Machine Description

A sliding table saw is primarily used to rip and crosscut sheet stock or panels in a production setting. The sliding table saves time and increases accuracy by removing the burden of sliding large and heavy panels over a stationary table surface. This saw can also be used as a traditional table saw for most types of through-cuts.

The Model G0764Z is equipped with a scoring blade, which is a smaller circular saw blade located in front of the main blade. It makes a shallow cut in the workpiece in the opposite direction of the main blade, greatly reducing tearout and chipped edges.

When using the sliding table saw as a traditional table saw, the sliding table is locked in place and the rip fence is then used to guide the workpiece through the cut.

Contact Info

We stand behind our machines! If you have questions or need help, contact us with the information below. Before contacting, make sure you get the **serial number** and **manufacture date** from the machine ID label. This will help us help you faster.

Grizzly Technical Support
1815 W. Battlefield
Springfield, MO 65807
Phone: (570) 546-9663
Email: techsupport@grizzly.com

We want your feedback on this manual. What did you like about it? Where could it be improved? Please take a few minutes to give us feedback.

Grizzly Documentation Manager
P.O. Box 2069
Bellingham, WA 98227-2069
Email: manuals@grizzly.com

Manual Accuracy

We are proud to provide a high-quality owner's manual with your new machine!

We made every effort to be exact with the instructions, specifications, drawings, and photographs in this manual. Sometimes we make mistakes, but our policy of continuous improvement also means that **sometimes the machine you receive is slightly different than shown in the manual**.

If you find this to be the case, and the difference between the manual and machine leaves you confused or unsure about something, check our website for an updated version. We post current manuals and manual updates for free on our website at **www.grizzly.com**.

Alternatively, you can call our Technical Support for help. Before calling, make sure you write down the **manufacture date** and **serial number** from the machine ID label (see below). This information is required for us to provide proper tech support, and it helps us determine if updated documentation is available for your machine.

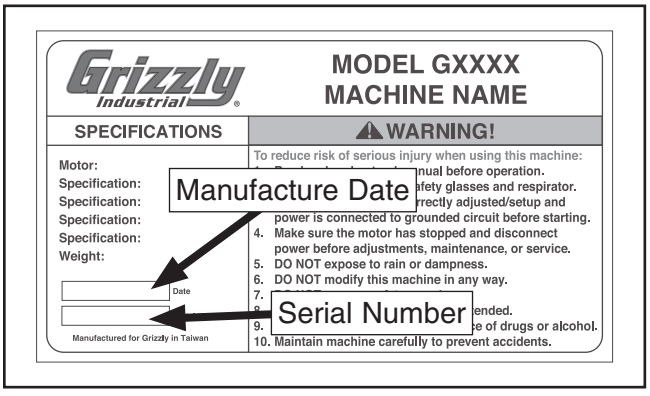

Controls & Components

Refer to **Figures 1–5** and the following descriptions to become familiar with the basic controls and components of this machine. Understanding these items and how they work will help you understand the rest of the manual and stay safe when operating this saw.

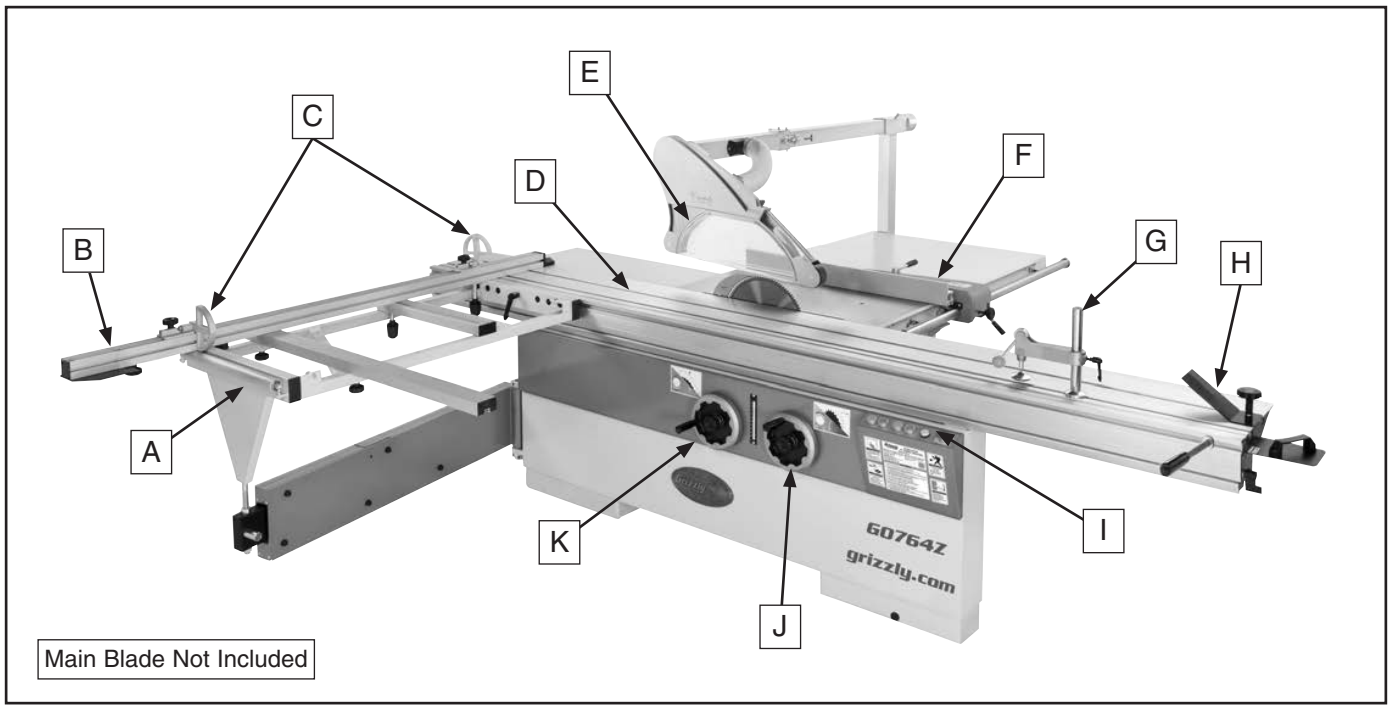

Figure 1. Model G0764Z overview.

A. Crosscut Table. Provides a wide, stable platform for supporting full-size panels during crosscutting operations. This is where you put panels when you are going to cut them using the sliding table.

B. Crosscut Fence. Used during crosscutting operations to keep panels at the desired angle to the blade. Features a scale and flip-style stop blocks.

C. Flip Stops. Used for quick, precise measurements for repeatable cuts when using crosscut fence.

D. Edge Shoe. Used with hold-down, keeps the other end of workpiece secured to sliding table.

E. Blade Guard. Fully-enclosed, adjustable blade guard maintains maximum protection around the saw blade with a 2½" dust port that effectively extracts dust from the cutting operation.

F. Rip Fence. Fully-adjustable with micro-adjustment knob for precision cuts of smaller workpieces. Fence face can be positioned for standard cutting operations, or in the lower position for blade guard clearance during narrow ripping operations.

G. Hold-Down. Quickly clamps one end of workpiece to sliding table.

H. Sliding Table. Ball-bearing rollers make it quicker and easier to guide large, heavy panels through the cut.

I. Control Panel. Features push-button controls for operating saw.

J. Blade Angle Handwheel. Adjusts angle of main and scoring blades for beveled cuts.

K. Blade Elevation Handwheel. Adjusts height of the main saw blade.

Rip Fence

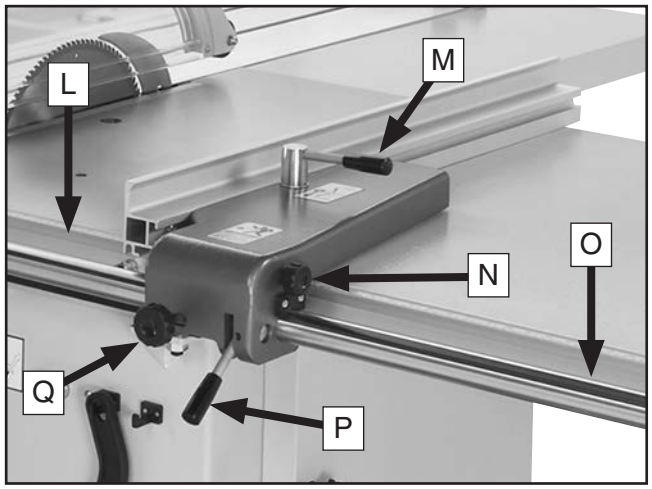

Figure 2. Rip fence controls.

L. Rip Fence Scale. Helps you measure the cut when rip cutting.

M. Slide Lock Handle. Secures the aluminum fence face on its forward/backward slide track to support the workpiece.

N. Micro-Adjust Knob. Provide precise adjustments of the fence along the rail. Tighten micro-adjust lock knob to use this feature.

O. Rip Fence Rail. Provides a stable side-to-side path for sliding the rip fence assembly toward or away from blade.



P. Rip Fence Lock Handle. Secures the rip fence assembly into position along the fence rail so that the workpiece is stable when cutting.

Q. Micro-Adjust Lock Knob. Enables the use of the micro-adjust knob for precise positioning of the rip fence.

Saw Blades

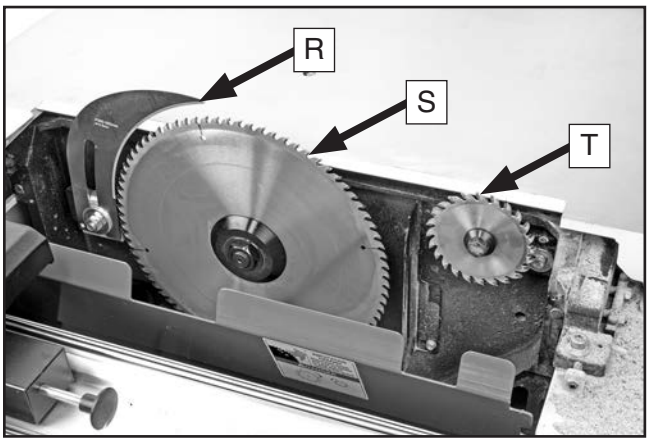

Figure 3. Saw blades and riving knife.

R. Riving Knife. Maintains kerf opening during cutting operations. This function is crucial to preventing kickback caused by the kerf closing behind the blade.

S. Main Blade. Performs the cutting operation.

T. Scoring Blade. Rotates in the opposite direction of the main blade and pre-cuts the surface of the workpiece before the actual cutting operation is performed to reduce tearout or chipping. The scoring blade is adjustable for kerf thickness and alignment with the main blade.

Front Controls

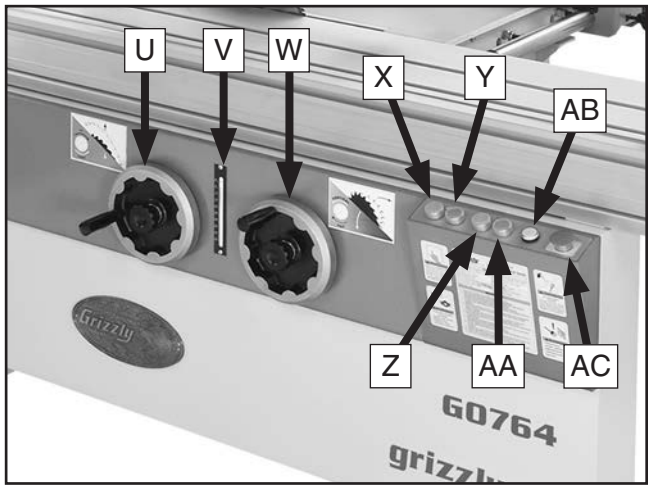

Figure 4. Front controls.

U. Main Blade Elevation Handwheel. Raises and lowers the main blade. The lock knob in the center secures the handwheel to prevent blade from moving during operation.

V. Tilt Scale. Displays the tilt angle of blades in degrees.

W. Blade Tilt Handwheel. Adjusts the tilt angle of both blades. The lock knob in the center secures the handwheel to prevent blade from moving during operation.

X. Main Blade ON Button.

Y. Main Blade OFF Button.

Z. Scoring Blade ON Button.

AA. Scoring Blade OFF Button.

AB. Power Lamp. When lit, provides a visual indicator that power is enabled to the saw.

AC. Emergency Stop Button. Turns both motors ***OFF***. Twist clockwise until it pops out to reset.

Rear Controls

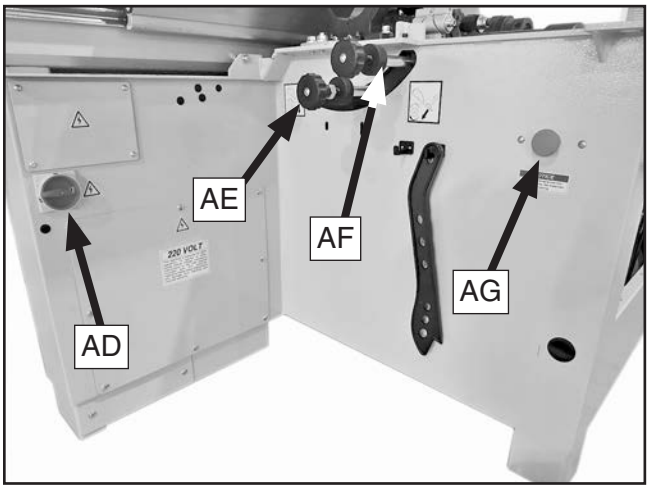

Figure 5. Rear controls.

AD. Master Power Switch. Enables power flow to the machine.

AE. Scoring Blade Elevation Knob. Raises and lowers the scoring blade to change the kerf thickness. The knurled wheel behind the knob secures the setting to prevent blade from moving during operation.

AF. Scoring Blade Alignment Knob. Adjusts the alignment of scoring blade to the main blade. The knurled wheel behind the knob secures the setting to prevent blade from moving during operation.

AG. Emergency Stop Button. Turns both motors ***OFF***. Twist clockwise until it pops out to reset.

⚠WARNING

For Your Own Safety Read Instruction Manual Before Operating Saw

a) Wear eye protection.
b) Use saw-blade guard for every operation for which it can be used.
c) Keep hands out of the line of saw blade.
d) Use a push-stick when required.
e) Pay particular attention to instructions on reducing risk of kickback.
f) Do not perform any operation freehand.
g) Never reach around or over saw blade.

Glossary Of Terms

The following is a list of common definitions, terms and phrases used throughout this manual as they relate to this sliding table saw and woodworking in general. Become familiar with these terms for assembling, adjusting or operating this machine. Your safety is VERY important to us at Grizzly!

Arbor: Metal shaft extending from the drive mechanism, to which saw blade is mounted.

Bevel Edge Cut: Tilting the arbor and saw blade to an angle between 0° and 45° to cut a beveled edge onto a workpiece.

Blade Guard: Metal or plastic safety device that mounts over the saw blade. Its function is to prevent the operator from coming into contact with the saw blade.

Crosscut: Cutting operation in which the crosscut fence is used to cut across the grain, or across the shortest width of the workpiece.

Dado Blade: Blade or set of blades that are used to cut grooves and rabbets.

Dado Cut: Cutting operation that cuts a flat bottomed groove into the face of the workpiece.

Featherboard: Safety device used to keep the workpiece against the rip fence and against the table surface.

Kerf: The resulting cut or gap in the workpiece from the saw blade passing through it while cutting.

Kickback: A dangerous event that happens if the blade catches on the workpieces while cutting. The force of the blade then throws the workpiece back toward the operator with what sounds like a horrible explosion. The danger comes from flying stock striking the operator or bystanders. The operator's hands may also be pulled into the blade during the kickback. Refer to **Preventing Kickback** on **Page 14** for additional information.

Parallel: When two objects are spaced an equal distance apart at every point along two given lines or planes (I.e. the rip fence face is parallel to the face of the saw blade).

Non-Through Cut: A sawing operation in which the workpiece is not completely sawn through. Dado and rabbet cuts are considered Non-Through Cuts because the blade does not protrude above the top face of the wood stock.

Perpendicular: Lines or planes that intersect and form right angles. I.e. the blade is perpendicular to the table surface.

Push Stick: Safety device used to push the workpiece through a cutting operation. Used most often when rip cutting thin workpieces.

Rabbet: Cutting operation that creates an L-shaped channel along the edge of the workpiece.

Riving Knife: Metal plate located behind the blade maintains the kerf opening in the wood when cutting, and helps reduce the risk of injury from a kickback that otherwise would result in amputation.

Straightedge: A tool with a perfectly straight edge used to check the flatness, parallelism, or consistency of a surface(s).

Through Cut: A sawing operation in which the workpiece is completely sawn through.

Rip Cut: Cutting operation in which the rip fence is used to cut with the grain, or cut across the widest width of the workpiece.

SLIDING TABLE SAW CAPACITIES

Customer Service #: (570) 546-9663 • To Order Call: (800) 523-4777 • Fax #: (800) 438-5901

MODEL G0764Z 14" SLIDING TABLE SAW

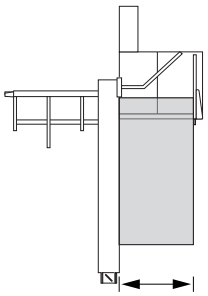

Ripping Width 51 1/4"

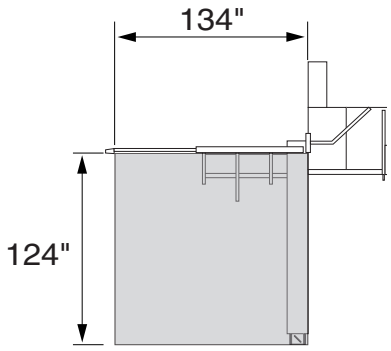

Cross Cut

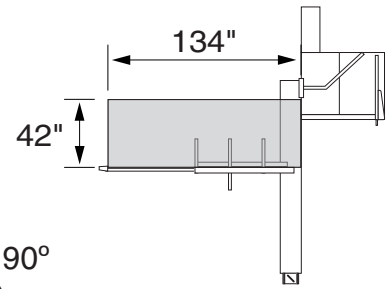

Miter Cut 90°
(push cut)

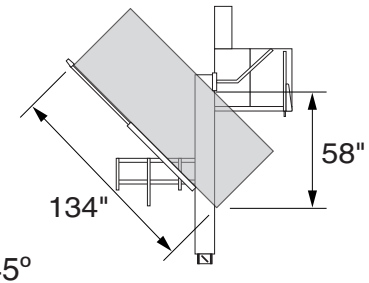

Miter Cut 45°
(push cut)

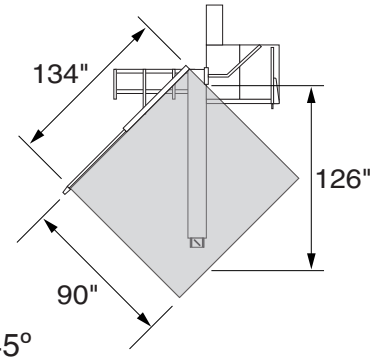

Miter Cut 45°

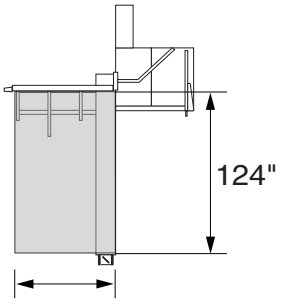

Cross Cut
(fence not extended)

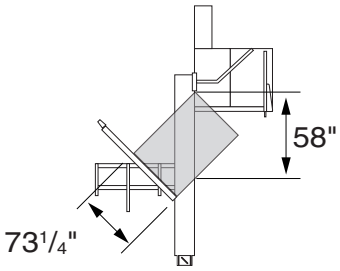

Miter Cut 45°
(push cut, fence not extended)

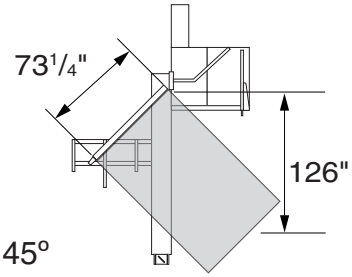

Miter Cut 45°
(fence not extended)

MACHINE DATA SHEET

Customer Service #: (570) 546-9663 · To Order Call: (800) 523-4777 · Fax #: (800) 438-5901

MODEL G0764Z 14" 10 HP 3-PHASE SLIDING TABLE SAW WITH 124" CUTTING CAPACITY

Product Dimensions:

Weight..... 1410 lbs.
Width (side-to-side) x Depth (front-to-back) x Height..... 133 x 202 x 65 in.
Footprint (Length x Width)..... 74-1/2 x 35-1/2 in.
Space Required for Full Range of Movement (Width x Depth)..... 279 x 203 in.

Shipping Dimensions:

Carton #1

Type..... Wood Crate
Content..... Machine
Weight..... 1397 lbs.
Length x Width x Height..... 83 x 45 x 44 in.
Must Ship Upright..... Yes

Carton #2

Type..... Wood Crate
Content..... Sliding Table
Weight..... 246 lbs.
Length x Width x Height..... 130 x 17 x 9 in.
Must Ship Upright..... Yes

Electrical:

Power Requirement..... 220V or 440V, 3-Phase, 60 Hz
Prewired Voltage..... 220V
Full-Load Current Rating..... 29.2A at 220V, 14.6A at 440V
Minimum Circuit Size..... 40A at 220V, 20A at 440V
Connection Type..... Permanent (Hardwire to Shutoff Switch)
Switch Type..... Magnetic w/Thermal Overload Protection
Voltage Conversion Kit..... P0764Z1814 for 440V
Recommended Phase Converter..... G7978

Motors:

Main

Horsepower..... 10 HP
Phase..... 3-Phase
Amps..... 26A at 220V, 13A at 440V
Speed..... 3450 RPM
Type..... TEFC Induction
Power Transfer ..... Belt Drive
Bearings..... Sealed & Permanently Lubricated

Scoring Blade

Horsepower..... 1 HP
Phase..... 3-Phase
Amps..... 3.2A at 220V, 1.6A at 440V
Speed..... 3450 RPM
Type..... TEFC Induction
Power Transfer ..... Belt Drive
Bearings..... Sealed & Permanently Lubricated

Main Specifications:

Operation Information

Main Blade Size	14 in.
Main Blade Arbor Size	1 in.
Scoring Blade Size	4-3/4 in.
Scoring Blade Arbor Size	20 mm
Main Blade Tilt	0 – 45 deg.
Main Blade Speed	3000, 4000, 5000 RPM
Scoring Blade Tilt	0 – 45 deg.
Scoring Blade Speed	8000 RPM

Cutting Capacities

Max Depth of Cut At 90 Deg	4-1/8 in.
Max Depth of Cut At 45 Deg	2-7/8 in.
Rip Fence Max Cut Width	51-1/4 in.
Sliding Table w/Crosscut Fence Max Cut Width	134 in.
Sliding Table w/Crosscut Fence Max Cut Length	124 in.
Miter Fence Max Cut Width at 45 Deg	126 in.

Table Information

Floor To Table Height	34-1/2 in.
Table Size Length	39-1/2 in.
Table Size Width	21-1/2 in.
Table Size Thickness	2-5/16 in.
Table Size With Ext Wings Length	35-1/4 in.
Table Size With Ext Wings Width	59-1/8 in.
Table Size With Ext Wings Thickness	2-1/2 in.
Sliding Table Length	126 in.
Sliding Table Width	14 in.
Sliding Table Thickness	6-3/4 in.
Sliding Table T-Slot Top Width	5/8 in.
Sliding Table T-Slot Height	5/8 in.
Sliding Table T-Slot Bottom Width	1-1/2 in.

Fence Information

Crosscut Fence Type	Extruded Aluminum
Crosscut Fence Size Length	73 in.
Crosscut Fence Size Width	2-3/8 in.
Crosscut Fence Size Height	2-3/8 in.
Crosscut Fence Number of Stops	2
Rip Fence Type	Single Lever Locking
Rip Fence Size Length	39-3/8 in.
Rip Fence Size Width	2 in.
Rip Fence Size Height	3-1/2 in.

Construction Materials

Table	Cast Iron
Cabinet	Steeel
Rip Fence Rails	Chromed Steel
Guard	Sheet Steel and Plastic
Spindle Bearing Type	Sealed & Permanently Lubricated
Cabinet Paint Type/Finish	Powder Coated

Other Related Information

No of Dust Ports	2
Dust Port Size	4, 5 in.

Other Specifications:

Country of Origin ..... Taiwan
Warranty ..... 1 Year
Approximate Assembly & Setup Time ..... 3 Hours
Serial Number Location ..... ID Label on Side of Machine
ISO 9001 Factory ..... Yes

Features:

Micro-Adjustable Rip Fence
Scoring Saw Blade for Tear-Out Free Cutting
Sliding Table on Steel Ball Guide System with Heat-Treated Steel Ways
Alloy Crosscut Fence for Miter Cutting 45 Deg. Right and Left
Miter Fence with Two Swing Stops for Repetitive Cutting
Adjustable Riving Knife
Overhead Blade Guard with Built-In Dust Port
Safety Limit Switch for Blade Cover

SECTION 1: SAFETY

For Your Own Safety, Read Instruction Manual Before Operating This Machine

The purpose of safety symbols is to attract your attention to possible hazardous conditions. This manual uses a series of symbols and signal words intended to convey the level of importance of the safety messages. The progression of symbols is described below. Remember that safety messages by themselves do not eliminate danger and are not a substitute for proper accident prevention measures. Always use common sense and good judgment.

⚠DANGER **Indicates an imminently hazardous situation which, if not avoided, WILL result in death or serious injury.**

⚠WARNING **Indicates a potentially hazardous situation which, if not avoided, COULD result in death or serious injury.**

⚠CAUTION **Indicates a potentially hazardous situation which, if not avoided, MAY result in minor or moderate injury. It may also be used to alert against unsafe practices.**

NOTICE **Alerts the user to useful information about proper operation of the machine to avoid machine damage.**

Safety Instructions for Machinery

⚠WARNING

OWNER'S MANUAL. Read and understand this owner's manual BEFORE using machine.

TRAINED OPERATORS ONLY. Untrained operators have a higher risk of being hurt or killed. Only allow trained/supervised people to use this machine. When machine is not being used, disconnect power, remove switch keys, or lock-out machine to prevent unauthorized use—especially around children. Make your workshop kid proof!

DANGEROUS ENVIRONMENTS. Do not use machinery in areas that are wet, cluttered, or have poor lighting. Operating machinery in these areas greatly increases the risk of accidents and injury.

MENTAL ALERTNESS REQUIRED. Full mental alertness is required for safe operation of machinery. Never operate under the influence of drugs or alcohol, when tired, or when distracted.

ELECTRICAL EQUIPMENT INJURY RISKS. You can be shocked, burned, or killed by touching live electrical components or improperly grounded machinery. To reduce this risk, only allow qualified service personnel to do electrical installation or repair work, and always disconnect power before accessing or exposing electrical equipment.

DISCONNECT POWER FIRST. Always disconnect machine from power supply BEFORE making adjustments, changing tooling, or servicing machine. This prevents an injury risk from unintended startup or contact with live electrical components.

EYE PROTECTION. Always wear ANSI-approved safety glasses or a face shield when operating or observing machinery to reduce the risk of eye injury or blindness from flying particles. Everyday eyeglasses are NOT approved safety glasses.

⚠WARNING

WEARING PROPER APPAREL. Do not wear clothing, apparel or jewelry that can become entangled in moving parts. Always tie back or cover long hair. Wear non-slip footwear to reduce risk of slipping and losing control or accidentally contacting cutting tool or moving parts.

HAZARDOUS DUST. Dust created by machinery operations may cause cancer, birth defects, or long-term respiratory damage. Be aware of dust hazards associated with each workpiece material. Always wear a NIOSH-approved respirator to reduce your risk.

HEARING PROTECTION. Always wear hearing protection when operating or observing loud machinery. Extended exposure to this noise without hearing protection can cause permanent hearing loss.

REMOVE ADJUSTING TOOLS. Tools left on machinery can become dangerous projectiles upon startup. Never leave chuck keys, wrenches, or any other tools on machine. Always verify removal before starting!

USE CORRECT TOOL FOR THE JOB. Only use this tool for its intended purpose—do not force it or an attachment to do a job for which it was not designed. Never make unapproved modifications—modifying tool or using it differently than intended may result in malfunction or mechanical failure that can lead to personal injury or death!

AWKWARD POSITIONS. Keep proper footing and balance at all times when operating machine. Do not overreach! Avoid awkward hand positions that make workpiece control difficult or increase the risk of accidental injury.

CHILDREN & BYSTANDERS. Keep children and bystanders at a safe distance from the work area. Stop using machine if they become a distraction.

GUARDS & COVERS. Guards and covers reduce accidental contact with moving parts or flying debris. Make sure they are properly installed, undamaged, and working correctly BEFORE operating machine.

FORCING MACHINERY. Do not force machine. It will do the job safer and better at the rate for which it was designed.

NEVER STAND ON MACHINE. Serious injury may occur if machine is tipped or if the cutting tool is unintentionally contacted.

STABLE MACHINE. Unexpected movement during operation greatly increases risk of injury or loss of control. Before starting, verify machine is stable and mobile base (if used) is locked.

USE RECOMMENDED ACCESSORIES. Consult this owner's manual or the manufacturer for recommended accessories. Using improper accessories will increase the risk of serious injury.

UNATTENDED OPERATION. To reduce the risk of accidental injury, turn machine ***OFF*** and ensure all moving parts completely stop before walking away. Never leave machine running while unattended.

MAINTAIN WITH CARE. Follow all maintenance instructions and lubrication schedules to keep machine in good working condition. A machine that is improperly maintained could malfunction, leading to serious personal injury or death.

DAMAGED PARTS. Regularly inspect machine for damaged, loose, or mis-adjusted parts—or any condition that could affect safe operation. Immediately repair/replace BEFORE operating machine. For your own safety, DO NOT operate machine with damaged parts!

MAINTAIN POWER CORDS. When disconnecting cord-connected machines from power, grab and pull the plug—NOT the cord. Pulling the cord may damage the wires inside. Do not handle cord/plug with wet hands. Avoid cord damage by keeping it away from heated surfaces, high traffic areas, harsh chemicals, and wet/damp locations.

EXPERIENCING DIFFICULTIES. If at any time you experience difficulties performing the intended operation, stop using the machine! Contact our Technical Support at (570) 546-9663.

Additional Safety for Sliding Table Saws

⚠WARNING

Serious cuts, amputation, or death can occur from contact with rotating saw blade during operation. Workpieces, broken blades, or flying particles thrown by blade can blind or strike operators or bystanders with deadly force. To reduce the risk of these hazards, operator and bystanders MUST completely heed the hazards and warnings below.

HAND & BODY POSITIONING. Keep hands away from saw blade and out of blade path during operation, so they cannot accidentally slip into blade. Only operate at front of machine and always stand to side of blade path. Never reach behind or over blade, or under blade guard when blade is spinning.

BLADE GUARD. The blade guard protects operator from rotating saw blade. Make sure blade guard is installed, adjusted correctly, and used for all possible "through cuts." Promptly repair or replace if damaged. Re-install immediately after operations that require its removal.

RIVING KNIFE. Use riving knife for all "non-through cuts." Make sure it is aligned and positioned correctly. Promptly repair or replace it if damaged.

KICKBACK. Kickback occurs when saw blade ejects workpiece back toward operator. Know how to reduce risk of kickback, and learn how to protect yourself if it does occur.

FEEDING WORKPIECE. Feeding workpiece incorrectly increases risk of kickback. Always allow blade to reach full speed before cutting, feed workpiece from front of saw, making sure workpiece is flat against table and a fence, miter gauge, or other guide is used to feed workpiece in a straight line. Feed cuts through to completion. Never start saw with workpiece touching blade or pull workpiece from behind blade. Never back workpiece out of cut, move it sideways, or perform a "freehand" operation. Never plunge cut.

DADO AND RABBET OPERATIONS. Dado and rabbeting operations require special attention since they must be performed with blade guard removed, which increases risk of blade contact. DO NOT attempt dado or rabbeting operations without first reading these sections in this manual.

PUSH STICKS/PUSH BLOCKS. To reduce risk of accidental blade contact, use push sticks/push blocks whenever possible. In event of an accident, these will often take damage that would have occurred to hands/fingers.

FENCE. To reduce risk of kickback, make sure fence remains properly adjusted and parallel with blade. Always lock fence before using. Do not use fence while using miter gauge. Make sure fence is not touching the blade when the saw is started.

CUT-OFF PIECES. To avoid risk of injury due to blade contact, turn saw ***OFF*** and allow blade to completely stop before removing cut-off pieces near blade or trapped between blade and table insert. Never use your hands to move cut-off pieces away from blade while saw is running.

BLADE ADJUSTMENTS. Adjusting blade height or tilt during operation increases risk of crashing blade and sending metal fragments flying with deadly force at operator or bystanders. Only adjust blade height and tilt when blade is completely stopped and saw is ***OFF***. Make sure blade is not touching the guard, riving knife, or workpiece before the saw is started.

CHANGING BLADES. Accidental startup while changing saw blade can result in serious injury. To reduce risk of accidental blade contact, always disconnect power before changing blades.

DAMAGED SAW BLADES. Damaged saw blade teeth can become deadly projectiles. Never use blades that have been dropped or damaged.

CUTTING CORRECT MATERIAL. Cutting metal, glass, stone, tile, etc., increases risk of operator injury due to kickback or flying particles. Only cut natural and man-made wood products, laminate-covered wood products, and some plastics. Never cut materials not intended for this saw.

Preventing Kickback

Do the following to prevent kickback:

- When rip cutting, only cut workpieces that have at least one smooth and straight edge. DO NOT cut excessively warped, cupped or twisted wood. If workpiece warpage is questionable, always choose another workpiece.
- Never attempt freehand cuts. If the workpiece is not fed parallel with the blade, kickback will likely occur. Always use the rip fence or crosscut fence to support the workpiece.
- Make sure the riving knife is properly aligned with the blade. A misaligned riving knife can cause the workpiece to catch or bind, increasing the chance of kickback. If you think that your riving knife is not aligned with the blade, stop operations, and check it immediately!
- Ensure sliding table slides parallel with the blade; otherwise, the chances of kickback are extreme. Take the time to check and adjust the sliding table before cutting.
- Always use the riving knife whenever possible. It reduces risk of kickback and reduces your risk of injury if it does occur.
- Always keep blade guard installed and in good working order.
- Feed cuts through to completion. Any time you stop feeding a workpiece in the middle of a cut, the chance of kickback is greatly increased.
- Ensure rip fence is adjusted parallel with the blade; otherwise, the chances of kickback are extreme. Take the time to check and adjust the rip fence before cutting.

⚠WARNING

Statistics show that the most common accidents among table saw users can be linked to kickback. Kickback is typically defined as the high-speed expulsion of stock from the table saw toward the operator. In addition to the danger of the operator or others in the area being struck by the flying stock, it is often the case that the operator's hands are pulled into the blade during the kickback.

Protecting Yourself From Kickback

Even if you know how to prevent kickback, it may still happen. Here are some precautions to help protect yourself if kickback DOES occur:

- Stand to the side of the blade path when cutting. If a kickback does occur, the thrown workpiece usually travels directly towards the front of the blade.
- Wear safety glasses or a face shield. In the event of a kickback, your eyes and face are the most vulnerable parts of your body.
- Never, for any reason, place your hand behind the blade path. Should kickback occur, your hand will be pulled into the blade.
- Use a push stick or push block to keep your hands farther away from the moving blade. If a kickback occurs, these safety devices will most likely take the damage that your hand would have received.
- Use featherboards or anti-kickback devices to prevent or slow down kickback.

SECTION 2: POWER SUPPLY

Availability

Before installing the machine, consider the availability and proximity of the required power supply circuit. If an existing circuit does not meet the requirements for this machine, a new circuit must be installed. To minimize the risk of electrocution, fire, or equipment damage, installation work and electrical wiring must be done by an electrician or qualified service personnel in accordance with all applicable codes and standards.



⚠WARNING

Electrocution, fire, shock, or equipment damage may occur if machine is not properly grounded and connected to power supply.

Full-Load Current Rating

The full-load current rating is the amperage a machine draws at 100% of the rated output power. On machines with multiple motors, this is the amperage drawn by the largest motor or sum of all motors and electrical devices that might operate at one time during normal operations.

Full-Load Current Rating at 220V .. 29.2 Amps
Full-Load Current Rating at 440V .. 14.6 Amps

The full-load current is not the maximum amount of amps that the machine will draw. If the machine is overloaded, it will draw additional amps beyond the full-load rating.

If the machine is overloaded for a sufficient length of time, damage, overheating, or fire may result—especially if connected to an undersized circuit. To reduce the risk of these hazards, avoid overloading the machine during operation and make sure it is connected to a power supply circuit that meets the specified circuit requirements.

Circuit Information

A power supply circuit includes all electrical equipment between the breaker box or fuse panel in the building and the machine. The power supply circuit used for this machine must be sized to safely handle the full-load current drawn from the machine for an extended period of time. (If this machine is connected to a circuit protected by fuses, use a time delay fuse marked D.)

⚠CAUTION

For your own safety and protection of property, consult an electrician if you are unsure about wiring practices or electrical codes in your area.

Note: *Circuit requirements in this manual apply to a dedicated circuit—where only one machine will be running on the circuit at a time. If machine will be connected to a shared circuit where multiple machines may be running at the same time, consult an electrician or qualified service personnel to ensure circuit is properly sized for safe operation.*

Circuit Requirements for 220V

This machine is prewired to operate on a power supply circuit that has a verified ground and meets the following requirements:

Nominal Voltage 220V, 230V, 240V
Cycle ..... 60 Hz
Phase 3-Phase
Power Supply Circuit ..... 40 Amps

Circuit Requirements for 440V

This machine can be converted to operate on a power supply circuit that has a verified ground and meets the requirements listed below. (Refer to **Voltage Conversion** instructions for details.)

Nominal Voltage 440V, 480V
Cycle ..... 60 Hz
Phase 3-Phase
Power Supply Circuit ..... 20 Amps

Connection Type

A permanently connected (hardwired) power supply is typically installed with wires running through mounted and secured conduit. A disconnecting means, such as a locking switch (see following figure), must be provided to allow the machine to be disconnected (isolated) from the power supply when required. This installation must be performed by an electrician in accordance with all applicable electrical codes and ordinances.

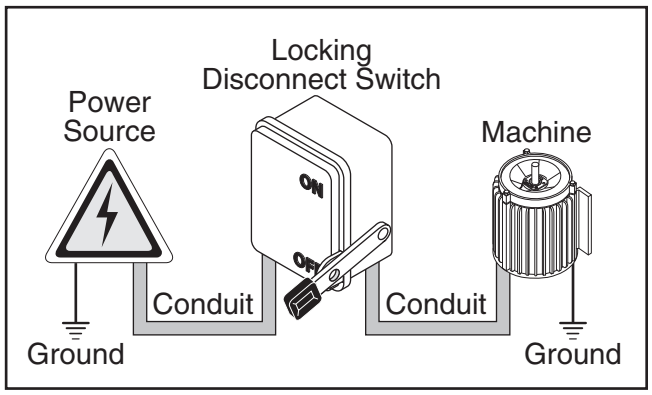

Figure 6. Typical setup of a permanently connected machine.

Grounding Instructions

In the event of a malfunction or breakdown, grounding provides a path of least resistance for electrical current to reduce the risk of electric shock. A permanently connected machine must be connected to a grounded metal permanent wiring system; or to a system having an equipment-grounding conductor. All grounds must be verified and rated for the electrical requirements of the machine. Improper grounding can increase the risk of electric shock!

⚠WARNING

Serious injury could occur if you connect machine to power before completing setup process. DO NOT connect to power until instructed later in this manual.

Extension Cords

Since this machine must be permanently connected to the power supply, an extension cord cannot be used.

440V Conversion

The Model G0764Z can be converted for 440V operation. This conversion job consists of: 1) Disconnecting the saw from the power source, 2) moving the fuse to the 440V holder, 3) replacing the overload relays, and 4) rewiring the main and scoring blade motors for 440V operation. Refer to **Page 85** for a detailed 440V wiring diagram

All wiring changes must be inspected by a qualified electrician or service personnel before the saw is connected to the power source. If, at any time during this procedure you need help, call Grizzly Tech Support at (570) 546-9663.

Contact the Grizzly Order Desk at (800) 523-4777 to purchase the 440V Conversion Kit, Part No. P0764Z1814.

To convert G0764Z for 440V operation:

1. DISCONNECT MACHINE FROM POWER!

2. Using a 4mm hex wrench, remove electrical panel cover (see **Figure 7**) from back of frame.

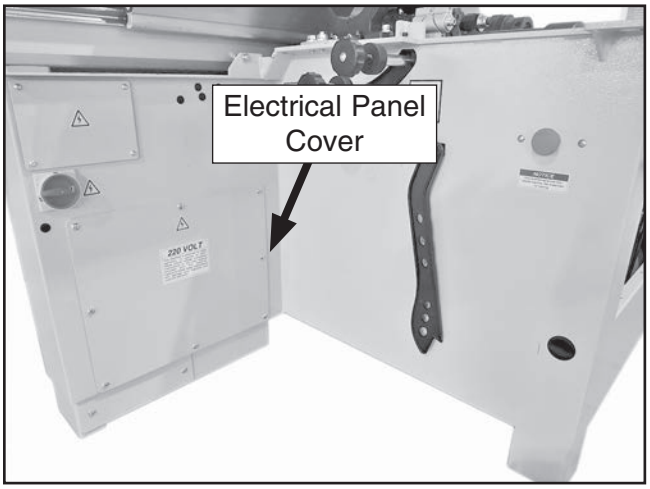

Figure 7. Electrical panel cover location.

3. Remove fuse from "220V" holder and insert it into "440V" holder (see illustration in **Figure 8**).

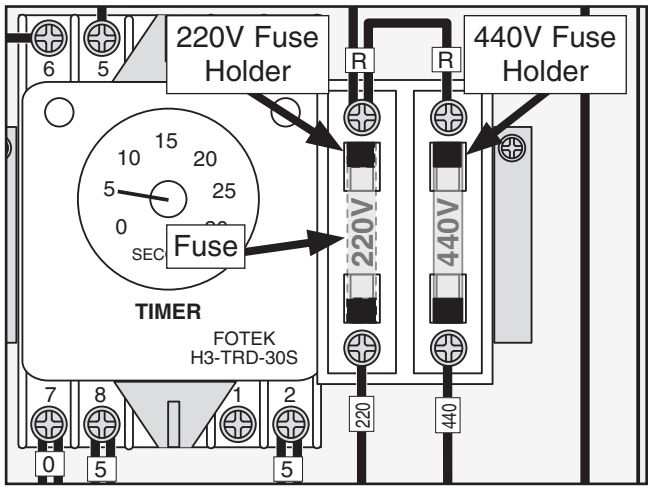

Figure 8. Moving fuse to "440V" fuse holder.

4. Replace left overload relay with TH-P12 overload relay, and set amperage dial to 1.7A (see **Figure 9**).

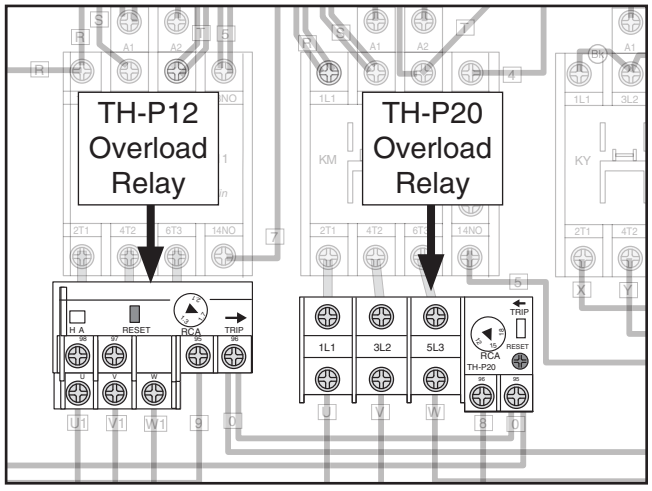

Figure 9. Overload relays for 440V.

5. Replace right overload relay with Shihlin TH-P20 overload relay, and set amperage dial to 15A (see **Figure 9**).

6. Open motor cabinet door on back of saw.

7. Rewire main blade and scoring blade motors to 440V. Refer to wiring diagrams on **Pages 87–88**.

8. Close motor cabinet door and replace electrical panel cover.

9. After **Setup** and **Assembly** procedures are completed, connect machine to power, as instructed on **Page 39**.

SECTION 3: SETUP

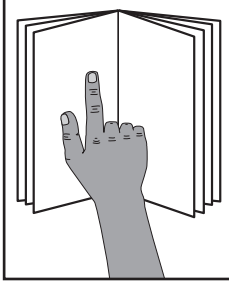

⚠WARNING

This machine presents serious injury hazards to untrained users. Read through this entire manual to become familiar with the controls and operations before starting the machine!



⚠WARNING

Wear safety glasses during the entire setup process!

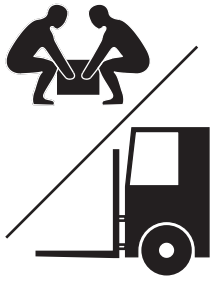

⚠WARNING

HEAVY LIFT!

Straining or crushing injury may occur from improperly lifting machine or some of its parts. To reduce this risk, get help from other people and use a forklift (or other lifting equipment) rated for weight of this machine.

Needed for Setup

The following are not included, but needed to properly complete the setup process.

Description	Qty
• Additional People	4
• Safety Glasses	1 Per Person
• Cleaner/Degreaser (**Page 22**)	As Needed
• Disposable Shop Rags	As Needed
• Forklift (Rated for at least 2000 lbs.)	1
• Straightedge 4'	1
• Level	1
• Screwdriver Phillips #2	1
• Screwdriver Flat Head #2	1
• Saw Blade 14"	1
• Dust Collection System w/4" branch line	1
• Dust Hose 4" (**Page 67**)	1
• Hose Clamp 4" (**Page 67**)	1
• Dust Hose 5" (**Page 67**)	1
• Hose Clamp 5" (**Page 67**)	1

Unpacking

This machine was carefully packaged for safe transport. When unpacking, separate all enclosed items from packaging materials and inspect them for shipping damage. ***If items are damaged, please call us immediately at (570) 546-9663.***

IMPORTANT: Save all packaging materials until you are completely satisfied with the machine and have resolved any issues between Grizzly or the shipping agent. *You MUST have the original packaging to file a freight claim. It is also extremely helpful if you need to return your machine later.*

Hardware Recognition Chart

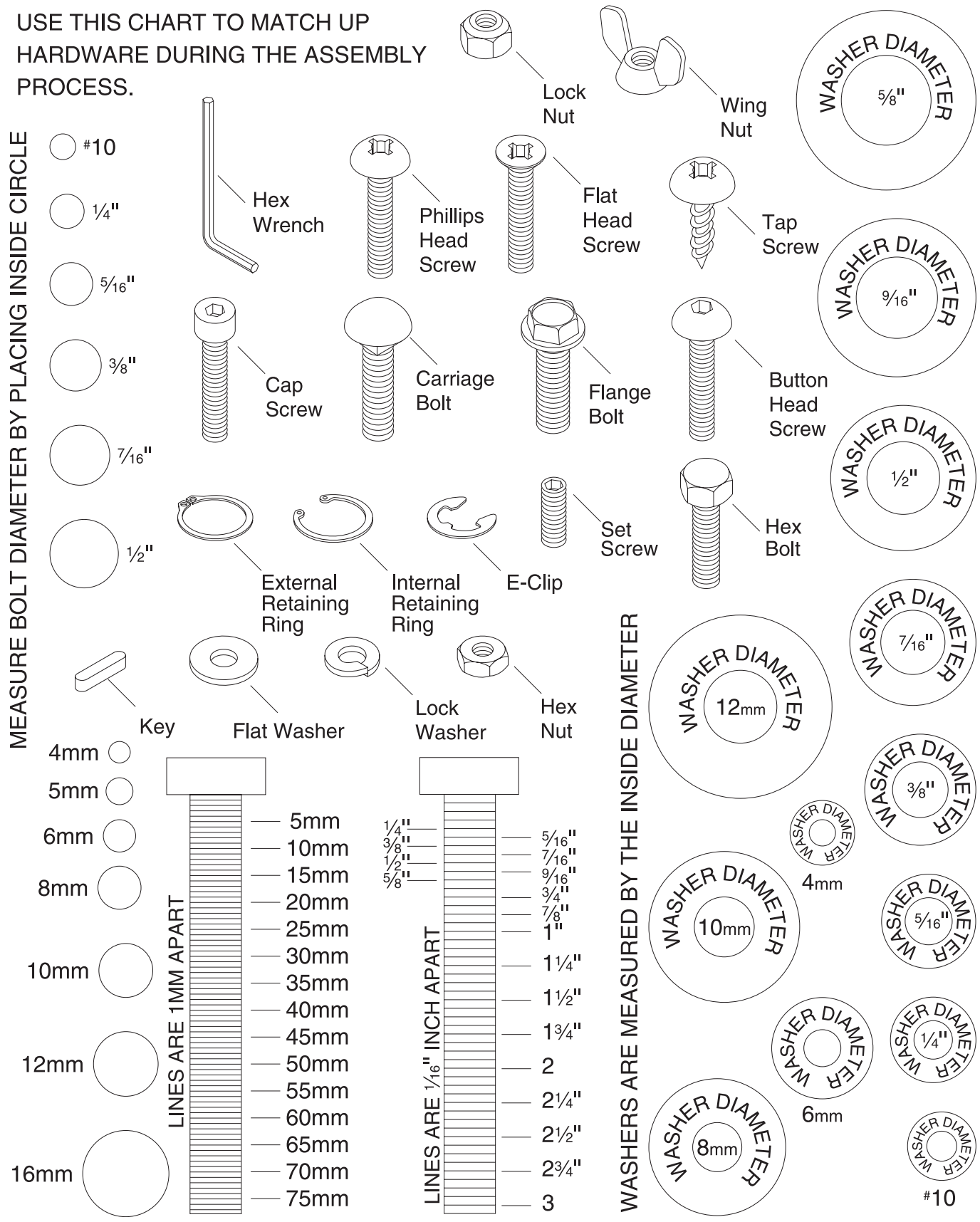

Inventory

These are the “loose” components shipped with the machine. Before setup, lay them out to make sure you have everything listed below.

If any non-proprietary parts are missing (e.g. a nut, bolt, or washer), we will gladly ship them upon verification of order. For the sake of expediency, you can also get replacement parts at your local hardware store.

Inventory (Figure 10)	Qty
A. Small Extension Table	1
—Set Screws M10-1.5 x 20	2
—Hex Nuts M10-1.5	2
B. Large Extension Table	1
—Set Screws M10-1.5 x 20	3
—Hex Nuts M10-1.5	3
C. Crosscut Table	1
D. Crosscut Fence	1
E. Crosscut Table Brace	1
F. Rip Fence Rail w/Fasteners	1
G. Rip Fence Scale	1
H. Rip Fence	1
I. Cabinet Door	1

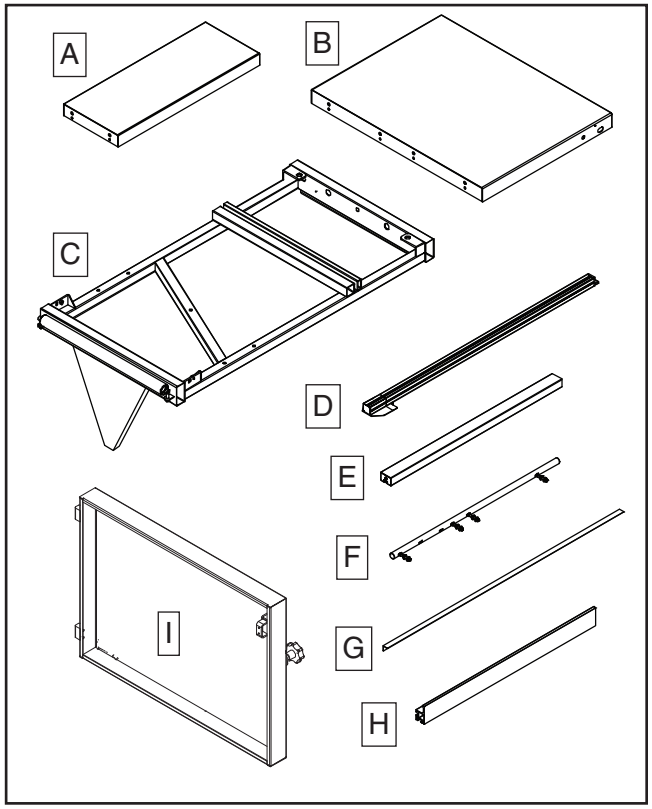

Figure 10. G0764Z Inventory 1.

Inventory (Figure 11)	Qty
J. Rip Fence Body Assembly	1
K. Push Handle Assembly	1
—Push Handle	1
—T-Nut M12-1.75	1
—Flat Washer 12mm	1
—Flat Washer 12mm (Copper)	1
L. Crosscut Fence Flip Stops	2
M. Edge Shoe Assembly	1
N. Push Stick	1
O. Riving Knife	1
P. Hold-Down Assembly	1
Q. Blade Guard Cover (Straight)	1
R. Blade Guard Connection Plate Assembly	1
S. Blade Guard Cover (Wide)	1
T. Blade Guard Dust Hood	1
U. Dust Port Connection	1
V. End Plate w/Handle (Sliding Table)	1
W. Arm Support Base	1
X. Arm Support Pedestal	1
Y. Upper Support Arm	1
Z. End Cap (Sliding Table)	1
ZZ. Dust Hose	1

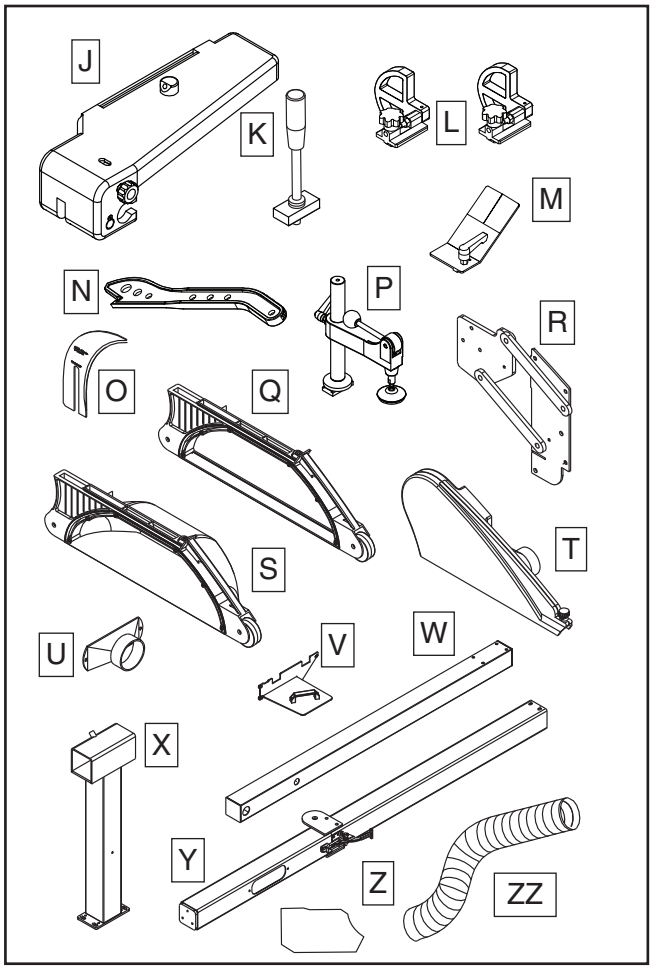

Figure 11. G0764Z Inventory 2.

AA. Arbor Locking Pin 1
AB. T-bolts M12-1.75 x 50 3
AC. Rip Fence Rail Stop Ring w/Set Screw 1
AD. Locking Handles M10-1.5 x 12 2
AE. Knob Bolt M10-1.5 x 70 1
AF. Rip Fence End Stop 1
AG. Adjustable Lock Handle M12-1.75 x 55 1
AH. T-Nut Plate M12-1.75 1
AI. T-Nuts M8-1.25 5
AJ. 90° Stop Block 1
AK. T-Bolt M8-1.25 x 35 1
AL. Pivot Bolt M8-1.25 1
AM. T-Slot Plate M8-1.25 1
AN. Long Knobs M8-1.25 2
AO. Knob Bolt M8-1.25 x 50 3
AP. Knob Bolt M8-1.25 x 25 w/Nylon Tip 1
AQ. Wire Clamps 3" 1
AR. Dust Hood Return Spring 1
AS. Dust Port Adapter 4" 1

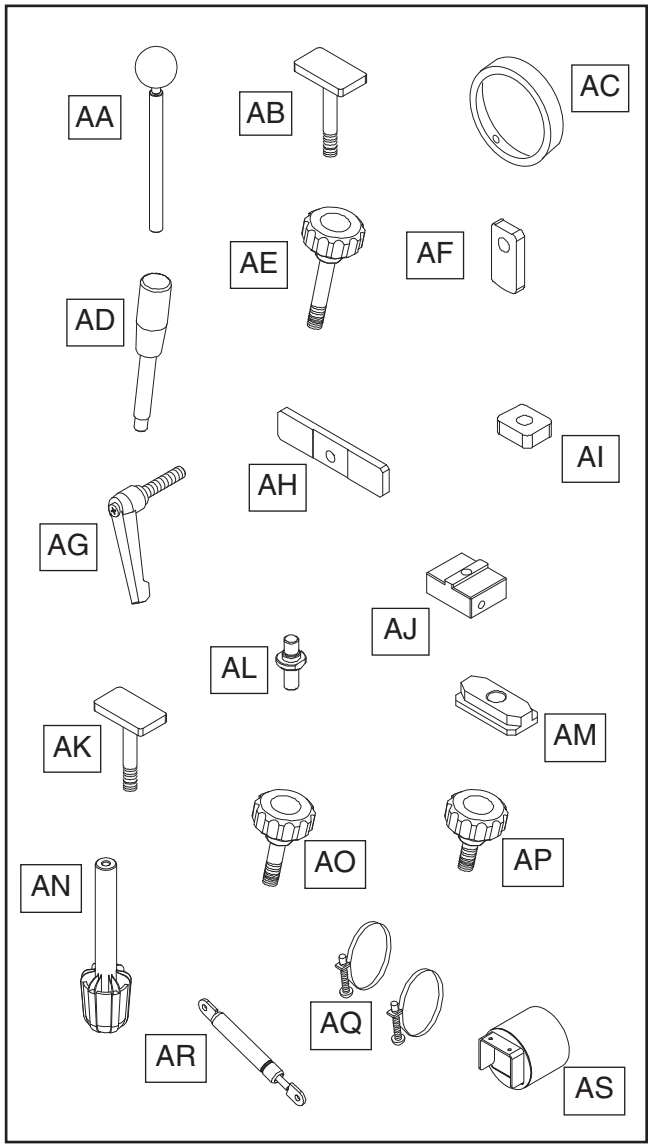

Figure 12. G0764Z Inventory 3.

Component Hardware (not shown)	Qty
—Combo Wrenches 30mm (Toolbox)	2
—Open-End Wrench 19/22mm (Toolbox)	1
—Open-End Wrench 36mm (Toolbox)	1
—Lock Washers 12mm (Sliding Table)	3
—Flat Washers 12mm (Sliding Table)	3
—Hex Nuts M12-1.75 (Sliding Table)	3
—B.H. Cap Screws M6-1 x 12 (Fence Scale)	3
—Flat Washers 6mm (Rip Fence Scale)	4
—Hex Nut M6-1 (Rip Fence Scale)	1
—Cap Screw M8-1.25 x 15 (Fence Rail)	1
—Lock Washer 8mm (Fence Rail)	1
—Flat Washer 12mm (Crosscut Table)	1
—Flat Washers 8mm (Crosscut Brace)	2
—Cap Screw M8-1.25 x 35 (Crosscut Fence)	1
—Lock Washer 8mm (Crosscut Fence)	1
—Flat Washer 8mm, Fiber (Crosscut Fence)	1
—Fender Washer 8mm (Crosscut Fence)	2
—Fender Washers 20mm (Lower Guard Arm)	2
—Hex Nuts M20-2.5 (Lower Guard Arm)	2
—Hex Bolt M12-1.75 x 70 (Lower Guard Arm)	1
—Hex Nut M12-1.75 (Lower Guard Arm)	1
—Cap Screws M8-1.25 x 25 (Arm Support)	4
—Flat Washers 8mm (Arm Support)	4
—Lock Washers 8mm (Arm Support)	4
—Hex Bolt M10-1.5 x 30 (Arm Support)	1
—90° Mounting Bracket (Arm Support)	1
—B.H. Cap Screws M6-1 x 12 (Dust Coupler)	4
—Flat Washers 6mm	5
—Lock Washers 6mm	6
—Cap Screws M6-1 x 20 (Guard Cover)	5
—Lock Washers 6mm (Guard Cover)	3
—Flat Washers 6mm (Guard Cover)	3
—Toolbox	1

NOTICE

If you cannot find an item on this list, carefully check around/inside the machine and packaging materials. Often, these items get lost in packaging materials while unpacking or they are pre-installed at the factory.

Cleanup

The unpainted surfaces of your machine are coated with a heavy-duty rust preventative that prevents corrosion during shipment and storage. This rust preventative works extremely well, but it will take a little time to clean.

Be patient and do a thorough job cleaning your machine. The time you spend doing this now will give you a better appreciation for the proper care of your machine's unpainted surfaces.

There are many ways to remove this rust preventative, but the following steps work well in a wide variety of situations. Always follow the manufacturer's instructions with any cleaning product you use and make sure you work in a well-ventilated area to minimize exposure to toxic fumes.

Before cleaning, gather the following:
- Disposable rags
- Cleaner/degreaser (WD•40 works well)
- Safety glasses & disposable gloves
- Plastic paint scraper (optional)

Basic steps for removing rust preventative:

1. Put on safety glasses.

2. Coat the rust preventative with a liberal amount of cleaner/degreaser, then let it soak for 5–10 minutes.

3. Wipe off the surfaces. If your cleaner/degreaser is effective, the rust preventative will wipe off easily. If you have a plastic paint scraper, scrape off as much as you can first, then wipe off the rest with the rag.

4. Repeat **Steps 2–3** as necessary until clean, then coat all unpainted surfaces with a quality metal protectant to prevent rust.



⚠WARNING

Gasoline and petroleum products have low flash points and can explode or cause fire if used to clean machinery. Avoid using these products to clean machinery.



⚠CAUTION

Many cleaning solvents are toxic if inhaled. Only work in a well-ventilated area.

NOTICE

Avoid harsh solvents like acetone or brake parts cleaner that may damage painted surfaces. Always test on a small, inconspicuous location first.

T23692—Orange Power Degreaser
A great product for removing the waxy shipping grease from the ***non-painted*** parts of the machine during clean up.

Call
1-800-523-4777
To Order



Site Considerations

Weight Load

Refer to the **Machine Data Sheet** for the weight of your machine. Make sure that the surface upon which the machine is placed will bear the weight of the machine, additional equipment that may be installed on the machine, and the heaviest workpiece that will be used. Additionally, consider the weight of the operator and any dynamic loading that may occur when operating the machine.

Space Allocation

Consider the largest size of workpiece that will be processed through this machine and provide enough space around the machine for adequate operator material handling or the installation of auxiliary equipment. With permanent installations, leave enough space around the machine to open or remove doors/covers as required by the maintenance and service described in this manual. **See below for required space allocation.**

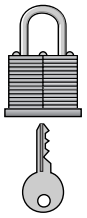

⚠CAUTION

Children or untrained people may be seriously injured by this machine. Only install in an access restricted location.

Physical Environment

The physical environment where the machine is operated is important for safe operation and longevity of machine components. For best results, operate this machine in a dry environment that is free from excessive moisture, hazardous chemicals, airborne abrasives, or extreme conditions. Extreme conditions for this type of machinery are generally those where the ambient temperature range exceeds 41°–104°F; the relative humidity range exceeds 20%–95% (non-condensing); or the environment is subject to vibration, shocks, or bumps.

Electrical Installation

Place this machine near an existing power source. Make sure all power cords are protected from traffic, material handling, moisture, chemicals, or other hazards. Make sure to leave enough space around machine to disconnect power supply or apply a lockout/tagout device, if required.

Lighting

Lighting around the machine must be adequate enough that operations can be performed safely. Shadows, glare, or strobe effects that may distract or impede the operator must be eliminated.

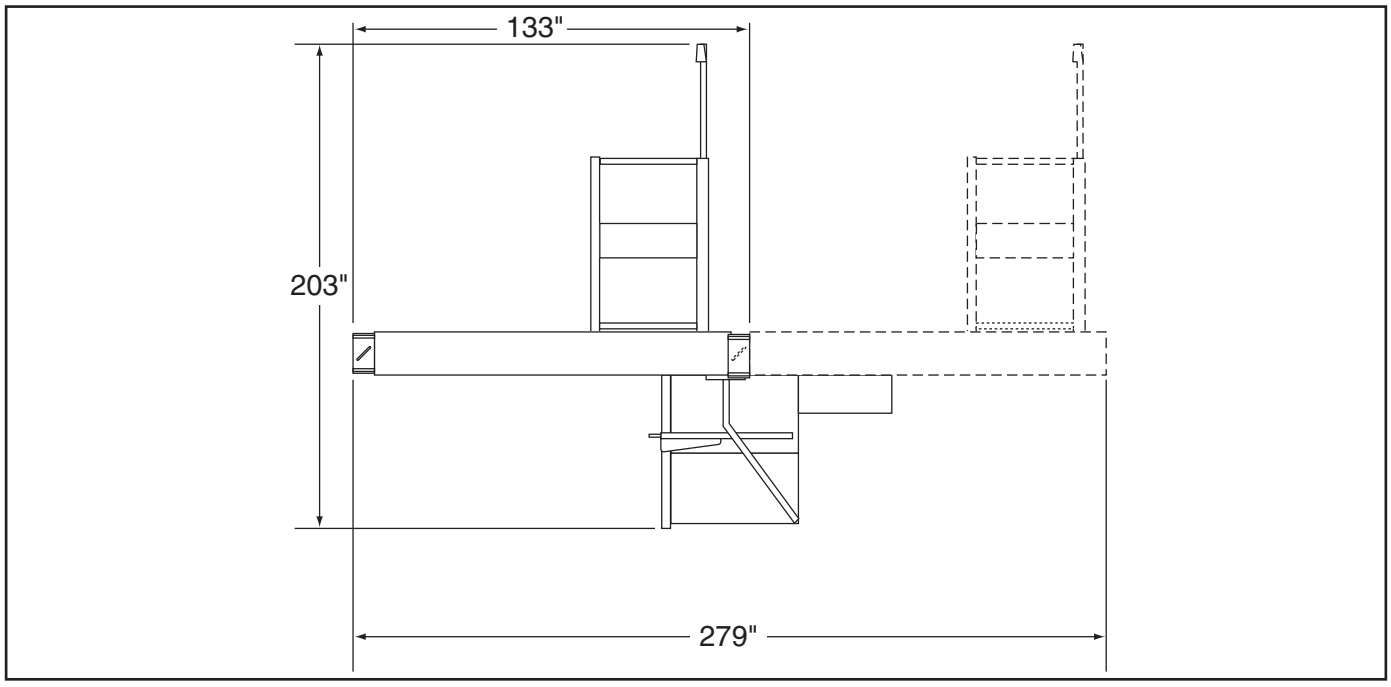

Figure 13. Minimum working clearances.

Lifting & Placing Saw

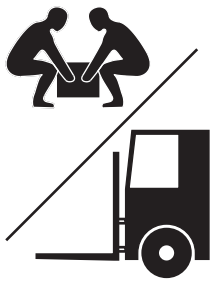

⚠WARNING

HEAVY LIFT!

Straining or crushing injury may occur from improperly lifting machine or some of its parts. To reduce this risk, get help from other people and use a forklift (or other lifting equipment) rated for weight of this machine.

To lift and place saw:

1. Position crate as close to installation location as possible.

2. Remove top of crate. Position forklift forks as wide as they can be while still fitting under center opening (see **Figure 14**).

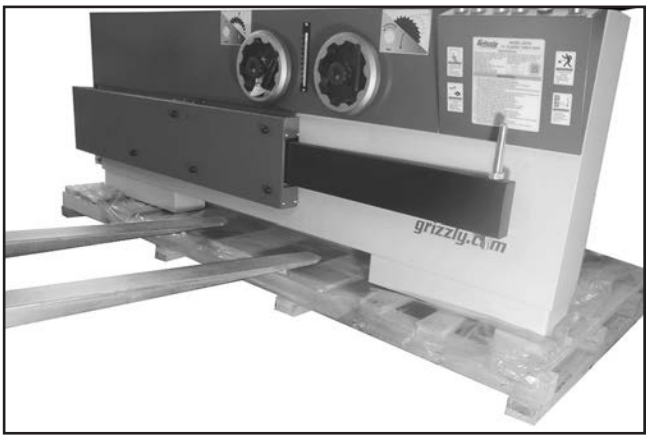

Figure 14. How to insert forks for lifting table saw off pallet.

3. Remove small items packed around saw and unbolt saw from pallet.

⚠WARNING

DO NOT lift saw any higher than necessary to clear pallet. Serious personal injury and machine damage may occur if safe moving methods are not followed.

4. With an assistant holding each end to help stabilize load, lift saw with forklift just high enough to clear pallet, and move it to your predetermined location.

5. Lower saw onto ground and back forklift away.

Assembly

The sliding table weighs nearly 200 pounds. It must be lifted and carefully positioned onto saw frame during assembly. If you are using a forklift to lift and place it, you'll need to use lifting slings around table to prevent scratching the aluminum surface.

If you are not able to use the described forklift method, the sliding table can be lifted into place by four strong people—with one lifting from each corner.

The only other part of the assembly that requires additional help is installation of the extension tables and blade guard arm. It takes approximately two hours to assemble the saw and make the required adjustments to prepare the saw for the test run.

To assemble sliding table saw:

1. Turn sliding table upside down, as shown in **Figure 15**.

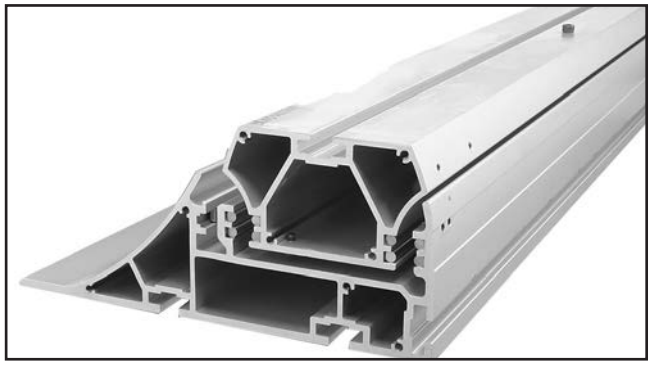

Figure 15. Sliding table turned upside down.



⚠WARNING

Lifting heavy machinery or parts without proper assistance or equipment may result in strains, back injuries, crushing injuries, or property damage.

2. Insert (3) M12-1.75 x 50 T-bolts into T-slot along bottom of sliding table (see **Figure 16**), and space them the same distance apart as mounting holes in cabinet frame.

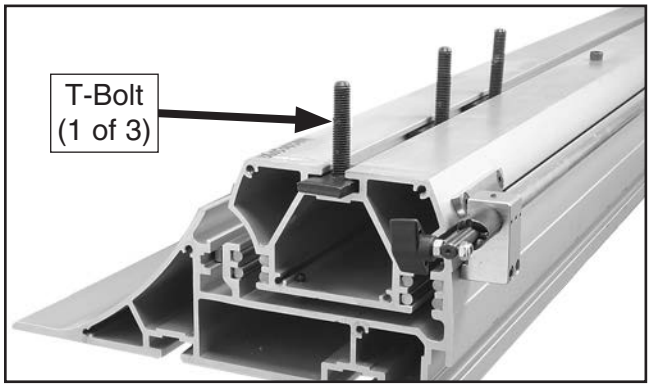

Figure 16. T-slot along bottom of table.

3. Lift sliding table over saw and lower T-bolts into mounting holes on frame, as shown in **Figure 17**.

   Note: *Make sure cap screw shown in* ***Figure 17*** *is on outside of cabinet frame and against mount edge.*

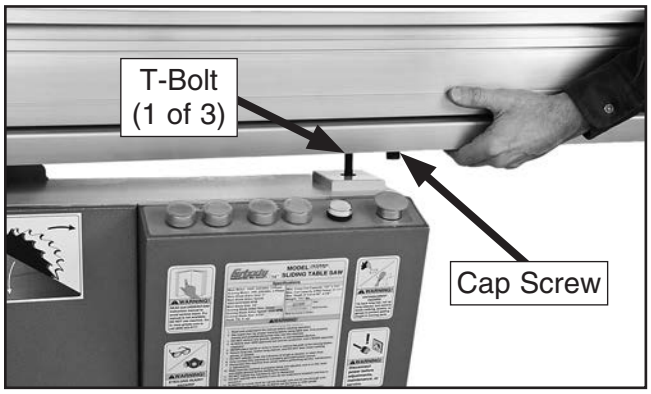

Figure 17. Inserting T-bolt into mounting hole on saw frame.

4. Install end plate with handle, as shown in **Figure 18**, using the screws pre-installed in this location on the sliding table.

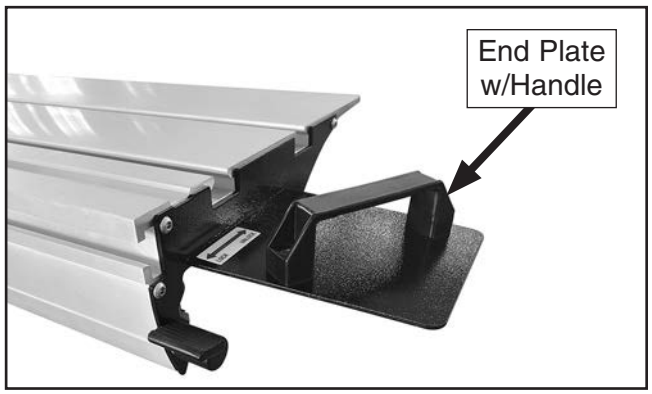

Figure 18. Slide table control end handle.

5. Position sliding table against parallelism adjustment bolts at each end (see **Figure 19**).

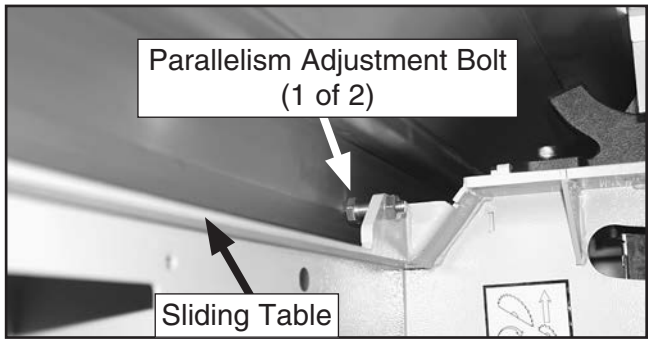

Figure 19. Sliding table parallelism adjustment bolt (1 of 2).

6. Remove access covers on each side of the frame to reach the T-bolts on the ends of the sliding table (**Figures 20–21**). Reach through cabinet access hole to reach middle sliding table T-bolt (**Figure 22**).

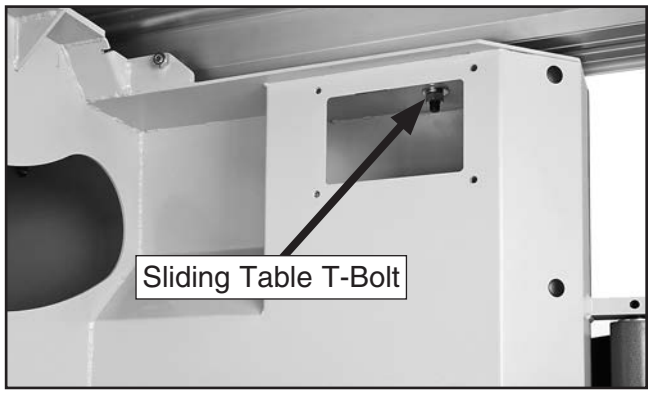

Figure 20. Sliding table T-bolt access on rear side at back of saw.

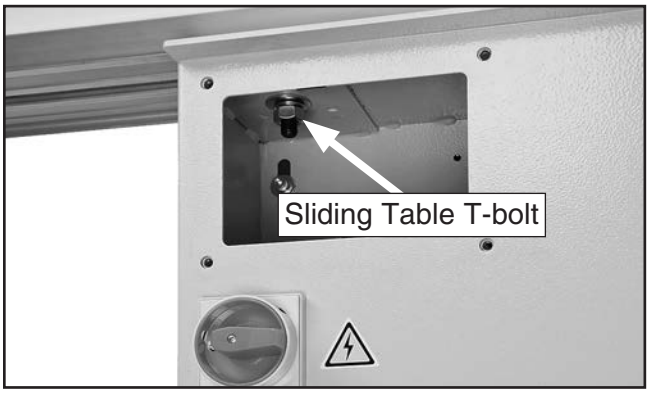

Figure 21. Sliding table T-bolt access on rear side at front of saw.

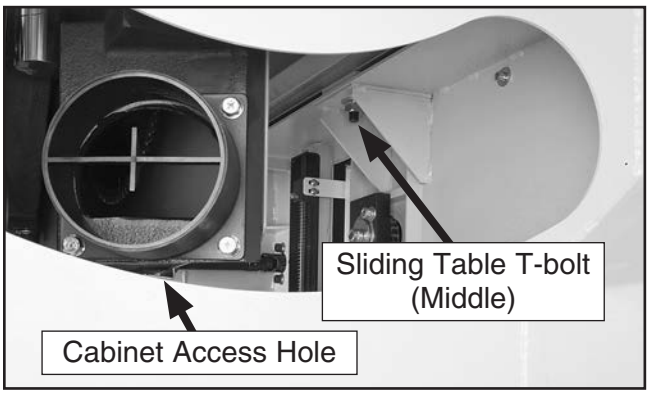

Figure 22. Sliding table middle T-bolt access.

7. Put (3) M12-1.75 hex nuts, (3) 12mm lock washers, and (3) 12mm flat washers on end of each T-bolt and tighten to secure sliding table to frame (as shown in **Figures 20–22**).

8. Attach end cap (as shown in **Figure 23**) with Phillips screws already threaded into those same holes on the sliding table.

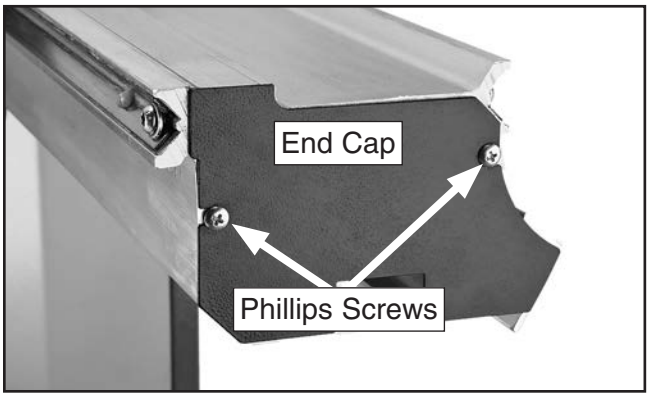

Figure 23. End cap secured on sliding table with Phillips screws.

9. Slide M12-1.75 T-nut of push handle assembly into T-slot at front end of sliding table, as shown in **Figure 24**. It may be necessary to loosen T-nut first.

Note: *Make sure 12mm flat washer and 12mm copper washer are positioned in front of T-slot, as shown in* ***Figure 24****.*

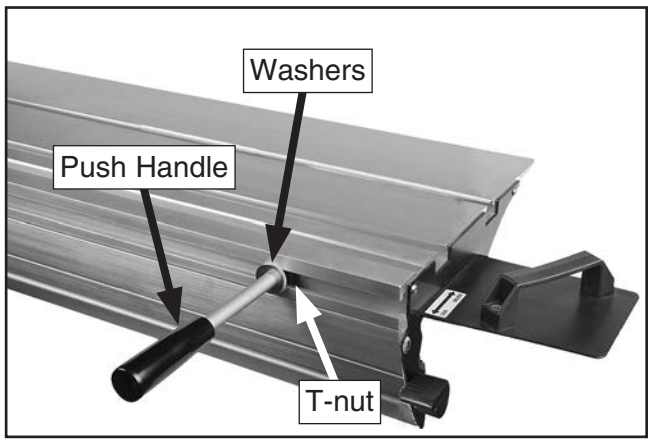

Figure 24. Push handle attached to sliding table.

10. Attach the cabinet door by sliding hinge sleeves over pins of already attached hinge (see **Figure 25**).

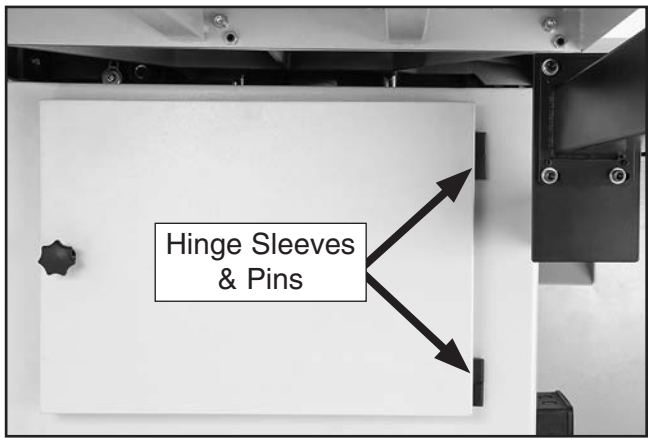

Figure 25. Cabinet door attached on hinges.

11. Attach large extension table to cast iron table using (3) pre-installed M10-1.5 x 25 cap screws, 10mm lock washers, and 10mm flat washers (see **Figure 26**). Only hand tighten cap screws for now. They will be fully tightened in a later step.

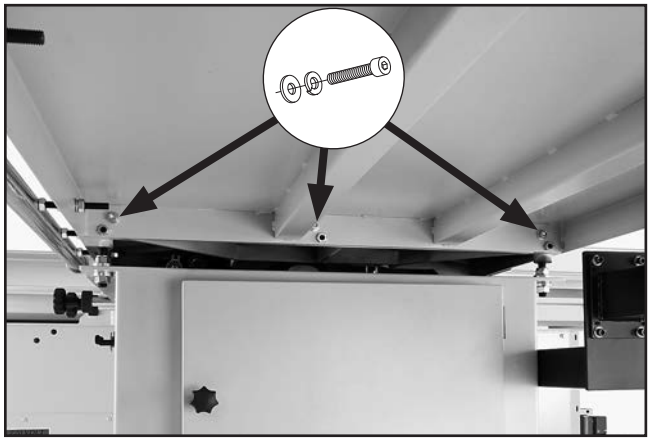

Figure 26. Underside view of large extension table attached to cabinet.

12. Place a straightedge across cast-iron table and large extension table to see if tables are parallel.

—If entire length of straight edge is parallel with both tables move on to **Step 14**.

—If both tables are not parallel with straight edge, loosen hex nuts on set screws shown in **Figure 27**. Adjust set screws to align top of extension table with top of cast-iron table, then retighten hex nuts to secure setting.

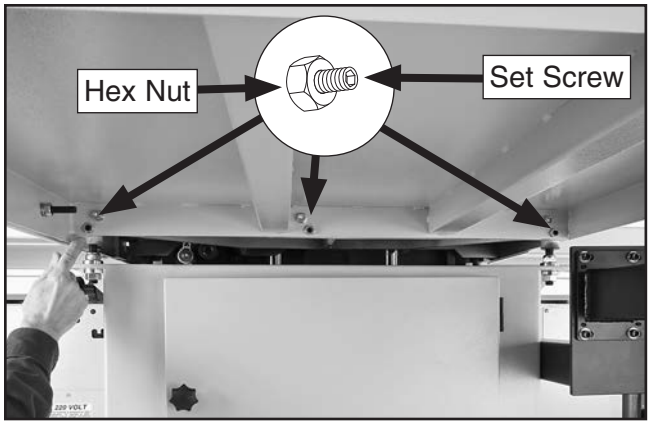

Figure 27. Location of set screws and hex nuts used to level extension table.

13. Fully tighten cap screws from **Step 12**.

14. Attach small extension table to cast iron table using (2) pre-installed M10-1.5 x 25 cap screws, 10mm lock washers, and 10mm flat washers (see **Figure 28**). Only hand tighten cap screws for now. They will be fully tightened in a later step.

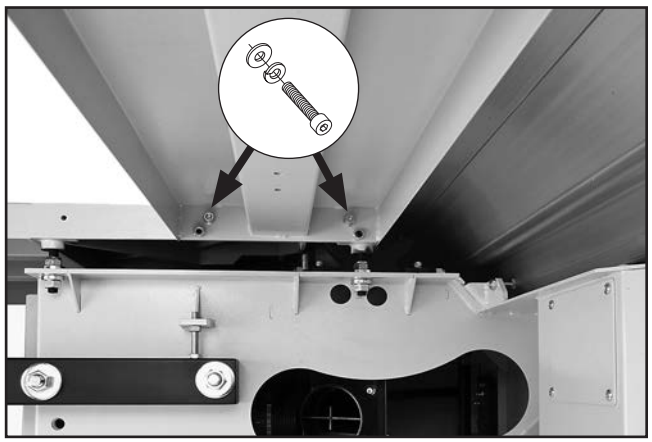

Figure 28. Underside view of large extension table attached to cabinet.

15. Place a straightedge across cast-iron table and large extension table to see if tables are parallel.

—If entire length of straight edge is parallel with both tables move on to **Step 17**.

—If both tables are not parallel with straight edge, loosen hex nuts on set screws shown in **Figure 29**. Adjust set screws to align top of extension table with top of cast-iron table, then retighten hex nuts to secure setting.

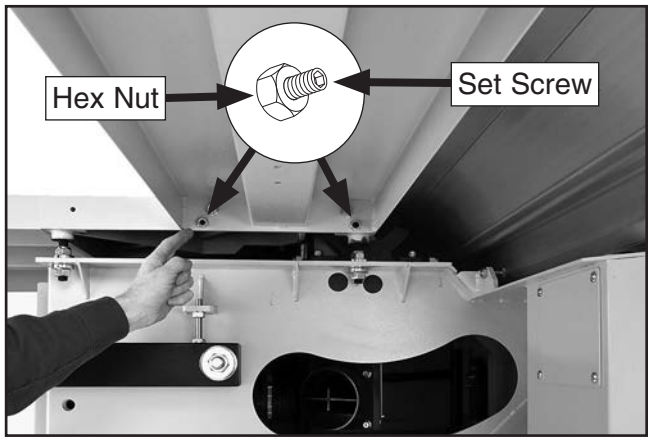

Figure 29. Location of set screws and hex nuts used to level extension table.

16. Fully tighten cap screws from **Step 15**.

17. Attach rip fence scale flush along top edge of cast iron table and large extension table (see **Figure 30**) with (3) M6-1 x 12 button head cap screws, (4) 6mm flat washers, and (1) M6-1 hex nut.

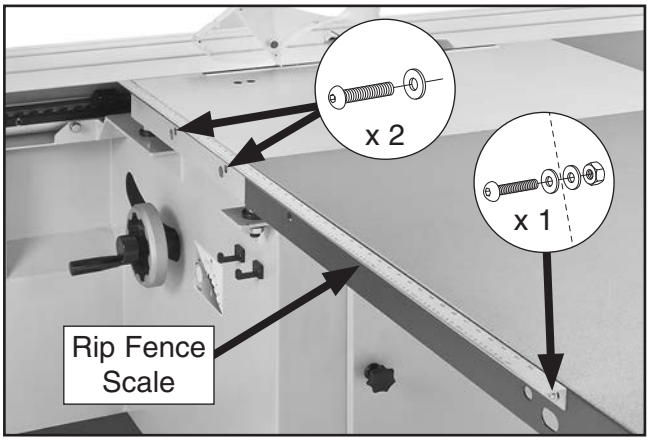

Figure 30. Rip fence scale attached flush with top edge of cast-iron table and large extension table.

18. The rip fence rail is pre-assembled with four rail studs and accompanying hardware. Remove (1) hex nut, (1) flat washer, and (1) lock washer from end of each stud, as shown in **Figure 31**.

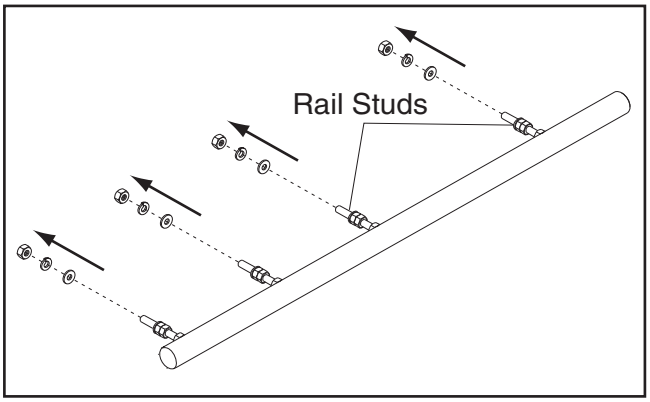

Figure 31. Removing rip fence rail hardware to prepare for installation.

19. Insert studs into tables as shown in **Figure 32**, and re-install hardware removed in **Step 20**.



Figure 32. Installing the rip fence rail.

20. Slide rip fence base onto fence rail as shown in **Figure 33**.

21. Thread (2) M10-1.5 x 12 lock handles and M10-1.5 x 70 lock knob bolt into rip fence base, as shown in **Figure 33**.

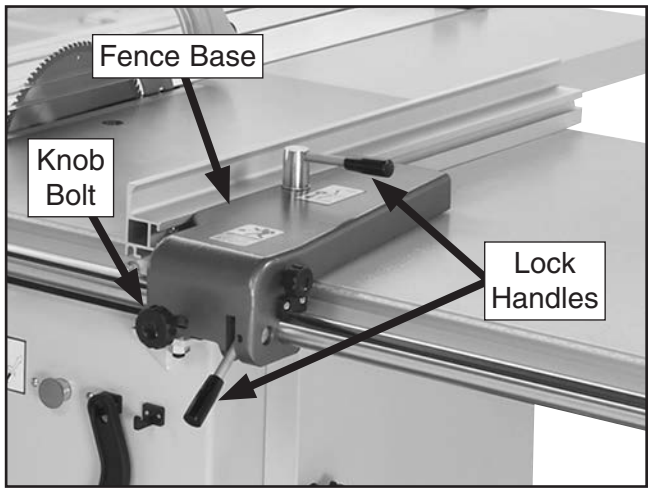

Figure 33. Rip fence attached with lock handles and lock knob installed.

22. Slide rip fence onto clamping plate, as shown in **Figure 34**, and lock it with slide lock handle.

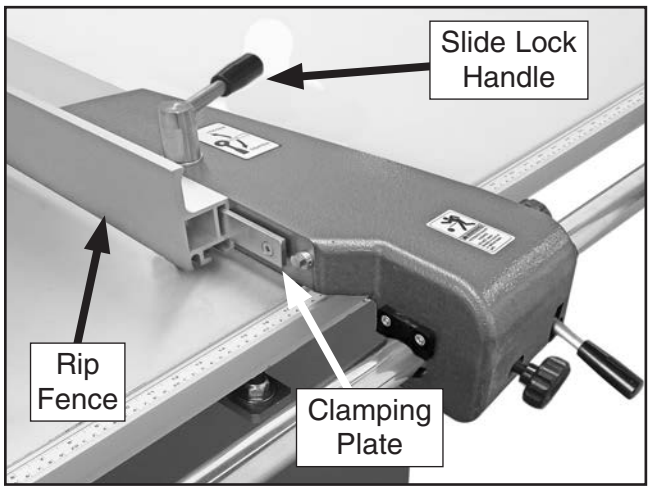

Figure 34. Rip fence attached to rip fence base.

23. Move sliding table all the way forward to expose blade cover. Pull blade cover toward front of machine to disengage magnetic catches (see **Figure 35**).

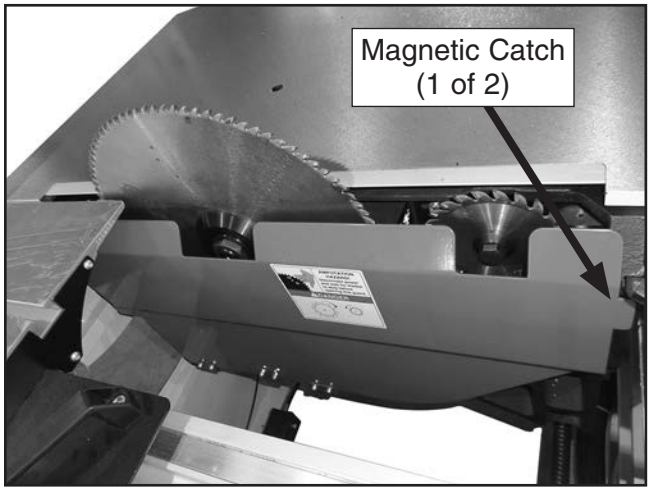

Figure 35. Location of magnetic catches that secure blade cover.

NOTICE

The Model G0764Z does not ship with a 14" main blade. Refer to *Blade Requirements* and *Blade Selection* beginning on *Page 47* when purchasing the main blade.

24. Insert arbor locking pin into access hole shown in **Figure 36**.

Note: *Main blade is shown here only for illustrative purposes.*

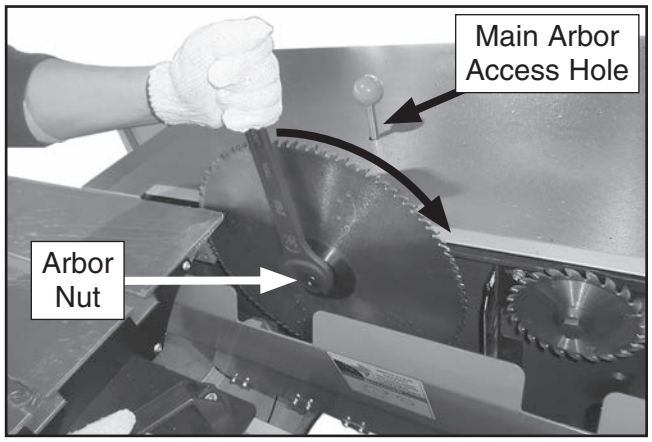

Figure 36. Loosening main blade arbor bolt.

25. Push down on locking tool with one hand as you rotate arbor nut clockwise with wrench. This will force blade locking tool into arbor indent and prevent arbor from rotating in next steps.

26. Continue unthreading arbor nut clockwise (it has left-hand threads) until you can remove flange (see **Figure 37**).

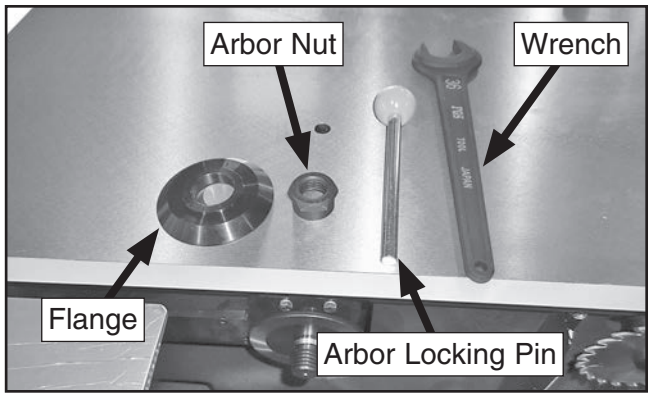

Figure 37. Main blade arbor parts and tools for changing blade.

⚠CAUTION

Before proceeding with the next steps, wear gloves to protect your hands when handling and installing the blade.

27. Slide main blade (not included) over arbor with teeth facing to the right, then install flange (see **Figure 38**).

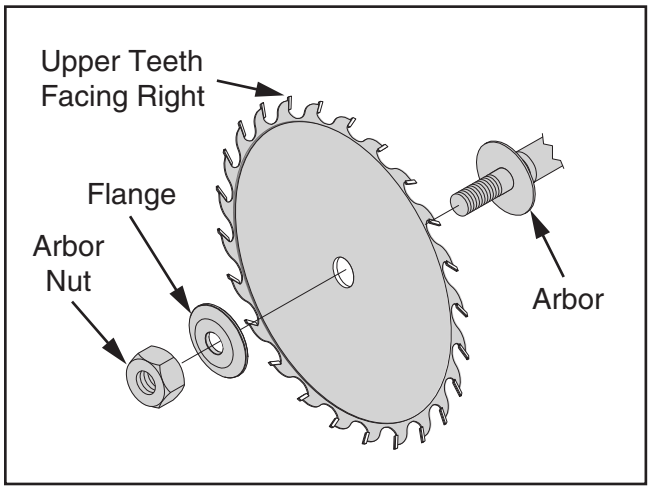

Figure 38. Main blade component assembly.

28. Thread arbor nut on counterclockwise and fully tighten it to secure the blade (see **Figure 39**).

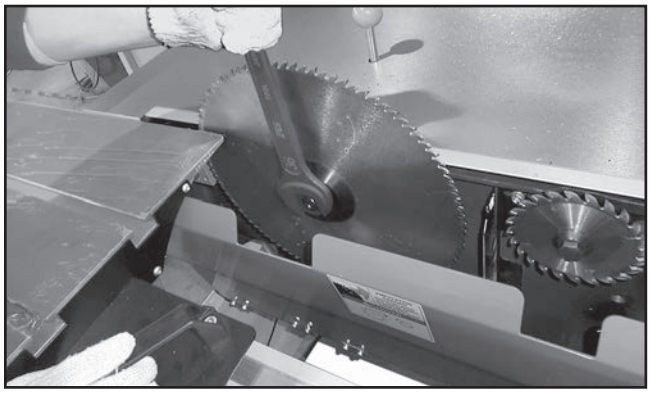

Figure 39. Main blade installed on arbor.

29. Install and align riving knife (refer to **Riving Knife Alignment** beginning on **Page 46** for detailed information).

30. Close blade cover. Center sliding table and lock in place.

31. Position rip fence ⅛" away from main blade.

32. Slide rip fence stop ring onto end of rail and tighten set screw to secure it in place (see **Figure 40**). When installed correctly, this ring will prevent rip fence from contacting blade.

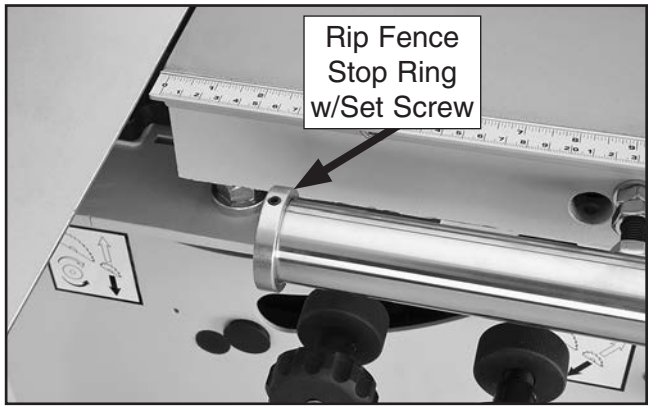

Figure 40. Rip fence stop ring attached to rail.

33. Install rip fence end stop on opposite end of rip fence rail with (1) M8-1.25 x 15 cap screw and (1) 8mm lock washer (see **Figure 41**).



Figure 41. Rip fence end stop attached to rail.

34. Adjust rip fence to main blade and tables as instructed in **Calibrating Rip Fence** on **Page 79**.

35. Thread M12-1.75 x 55 adjustable lock handle with a 12mm flat washer through hole in short side of crosscut table and into a M12-1.75 T-nut plate, as shown in **Figure 42**.

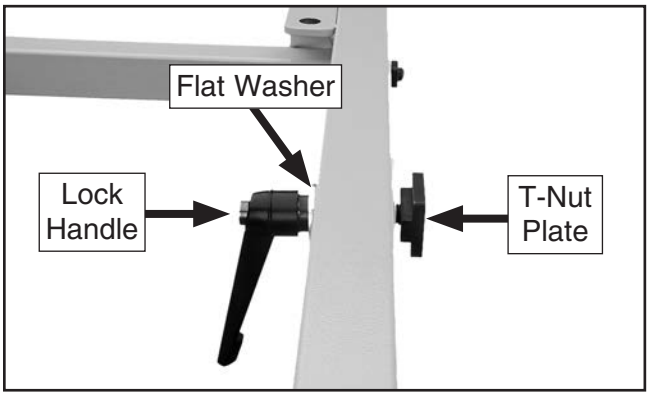

Figure 42. Crosscut lock handle installed on crosscut table.

36. With assistance from other people, place crosscut table on swing arm pivot pin and slide T-nut plate into sliding table T-slot, as shown in **Figure 43**.

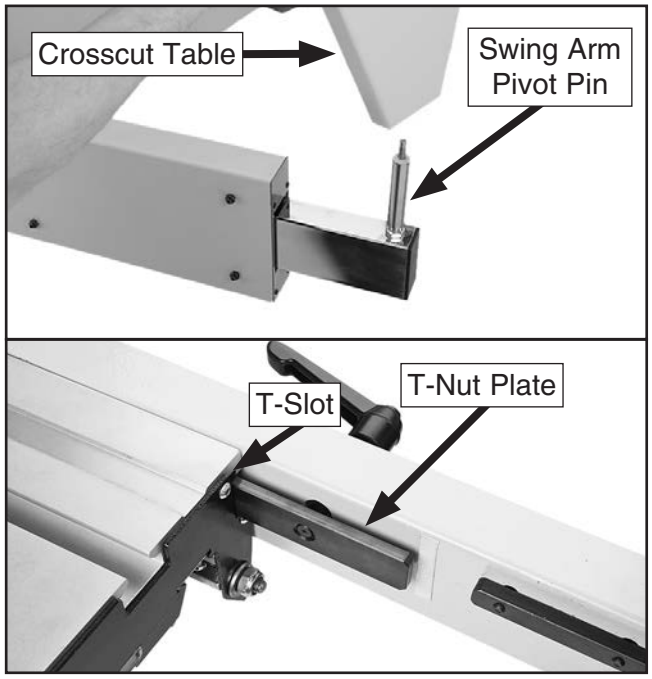

Figure 43. Attaching crosscut table to machine frame.

37. Slide (2) M8-1.25 T-nuts into crosscut table brace T-slots, and align them with center holes in crosscut table (see **Figure 44**).

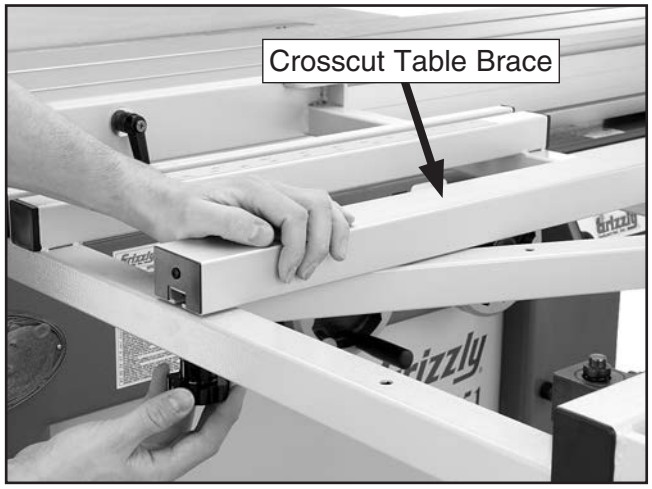

Figure 44. Example of table brace attached to crosscut table.

38. Secure table brace by threading (2) M8-1.25 x 50 knob bolts with (2) 8mm flat washers into brace T-nuts (see **Figure 44**).

39. Turn crosscut fence onto its side.

40. On crosscut fence end nearest blade:

a. Insert (1) M8-1.25 T-nut into T-slot, then loosely thread M8-1.25 pivot bolt with 8mm fiber flat washer into T-nut (see **Figure 45**).

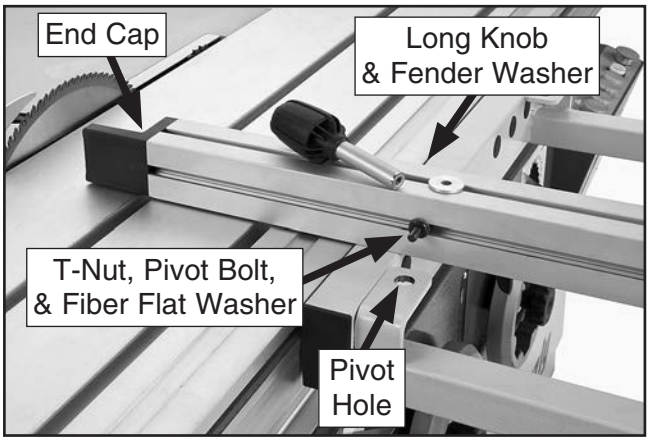

Figure 45. Crosscut fence hardware near to blade.

b. Position crosscut fence so edge cap (see **Figure 45**) is close to but not touching main blade.

c. Align the pivot bolt with pivot hole (see **Figure 45**), then fully tighten pivot bolt.

Note: *Long knob and fender washer will help secure crosscut fence in later step.*

41. In middle of crosscut fence:

a. Insert M8-1.25 x 35 T-bolt into T-slot (see **Figure 46**).

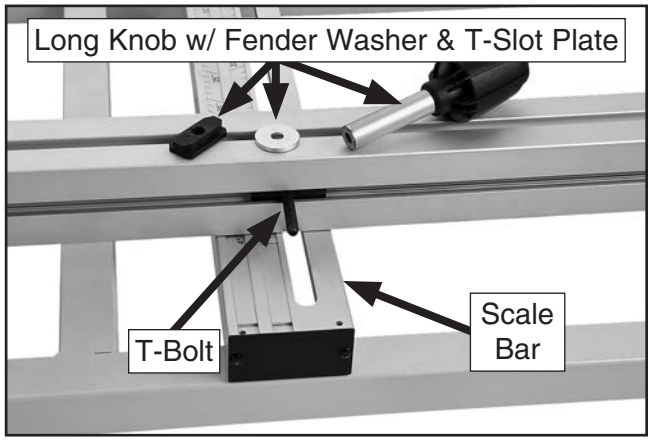

Figure 46. Crosscut fence hardware in the middle.

b. Align T-slot bolt with slot in pre-installed scale bar (see **Figure 46**).

Note: *Long knob and fender washer will help secure crosscut fence in later step.*

42. On end of crosscut fence farthest from blade:

a. Insert M8-1.25 T-nut into T-slot

b. Attach 90° stop block to T-nut with M8-1.25 x 35 cap screw and 8mm lock washer so that it is aligned with stop bolt (see **Figure 47**).

Note: *Make sure threaded hole in stop block is on the right of cap screw.*

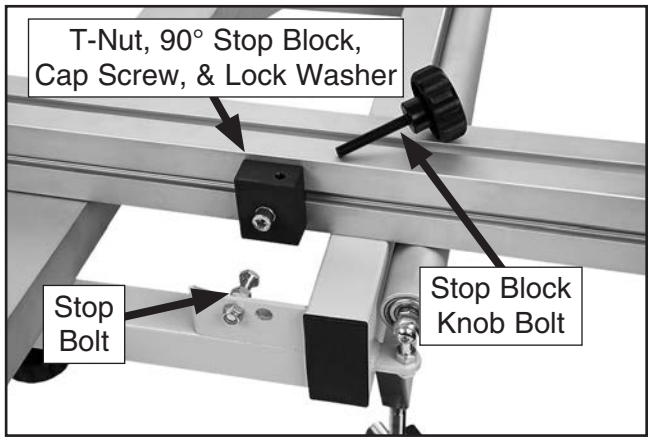

Figure 47. 90° stop block installed.

43. Without moving previously installed hardware, flip crosscut fence over and insert pivot bolt and T-slot bolt into appropriate hole/slot.

44. Secure crosscut fence to crosscut table by:

a. From underneath left side of crosscut fence, threading M8-1.25 long knob with 8mm fender washer onto pivot bolt.

b. From underneath middle of crosscut fence, positioning M8-1.25 T-slot plate in scale bar slot, then threading M8-1.25 long knob with 8mm fender washer onto previously installed T-slot bolt.

c. On the right side of crosscut fence, making sure 90° stop block is against stop bolt, then securing fence by threading M8-1.25 x 50 knob bolt into threaded hole on stop block.

45. Slide crosscut fence extension out, as shown in **Figure 48**.

46. Attach flip stops onto long side of crosscut fence by sliding T-nuts into T-slots on fence and tightening the knob bolts (see **Figure 48**).

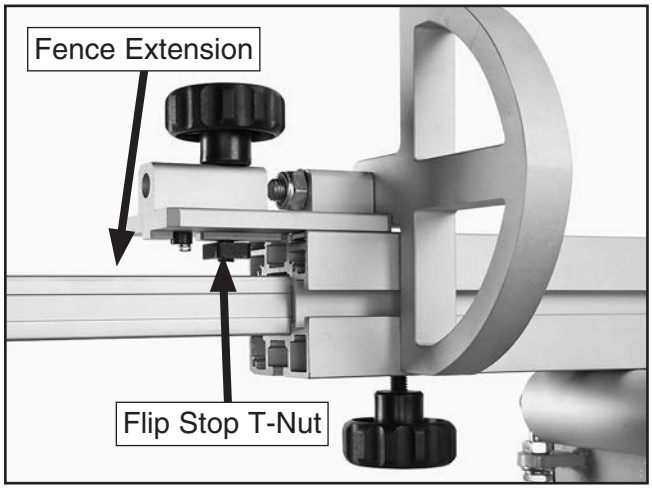

Figure 48. Flip stop attached to crosscut fence.

47. From underneath right end of crosscut fence, insert M8-1.25 T-nut into crosscut fence T-slot, then thread M8-1.25 x 25 knob bolt with nylon tip through T-nut and into placement hole (see **Figure 49**). This secures crosscut extension fence in place.

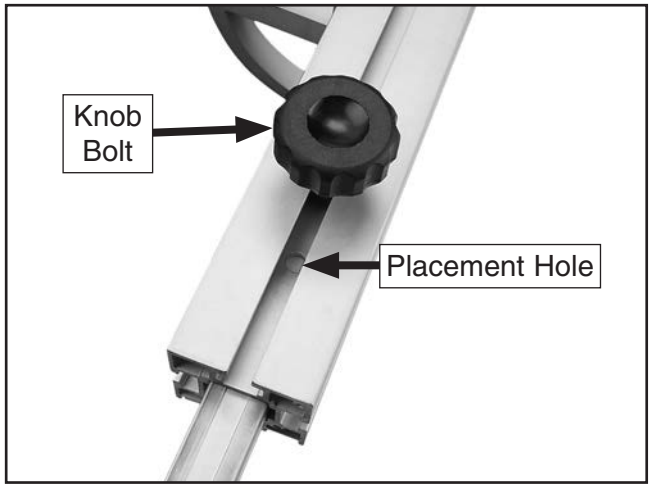

Figure 49. Knob bolt and placement hole (viewed from underneath crosscut fence).

48. Thread (1) M12-1.75 x 70 arm-leveling bolt with M12-1.75 jam nut into bracket connected to rear of machine body, as shown in **Figure 50**.

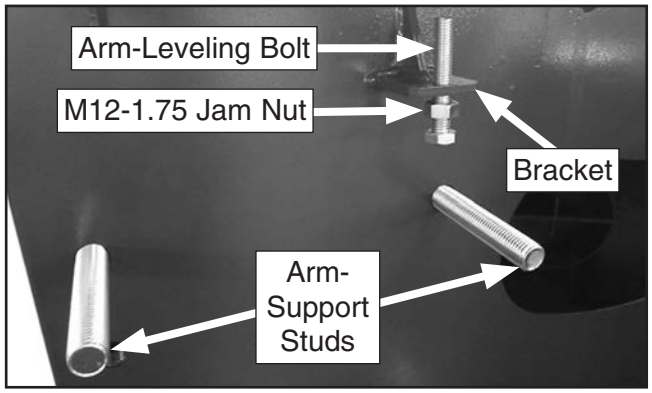

Figure 50. Arm-support studs installed in body and arm-leveling bolt installed in bracket.

49. Remove hex nuts from pre-installed arm-support studs (see **Figure 50**), and install support-arm base onto arm-support studs, as shown in **Figure 51**.

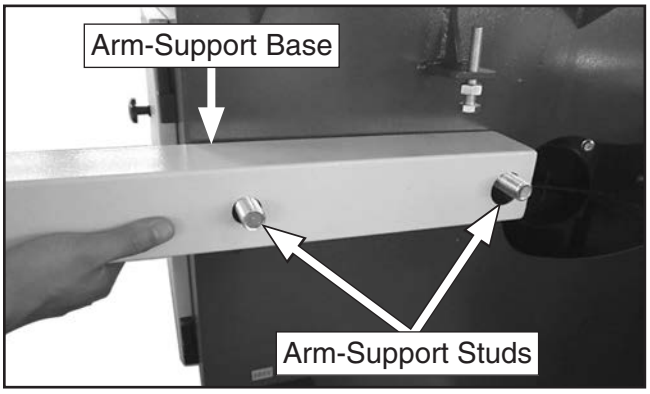

Figure 51. Installing arm-support base.

50. Adjust arm-leveling bolt until arm support base is parallel with floor (see **Figure 52** on **Page 35**).

Tip: *Check this position by using a tape to measure the distance between each end of the arm-support base and the floor.*

Note: *This parallel position helps ensure the blade guard is parallel with the table once it is installed. For now, this positioning should be very close. It will be checked, and if necessary, fine-tuned in a later step.*

51. Tighten jam nut against bracket (see **Figure 52**) to secure arm-leveling bolt.

52. Secure arm-support base with (2) M20-2.5 hex nuts and (2) 20mm fender washers (see **Figure 52**).

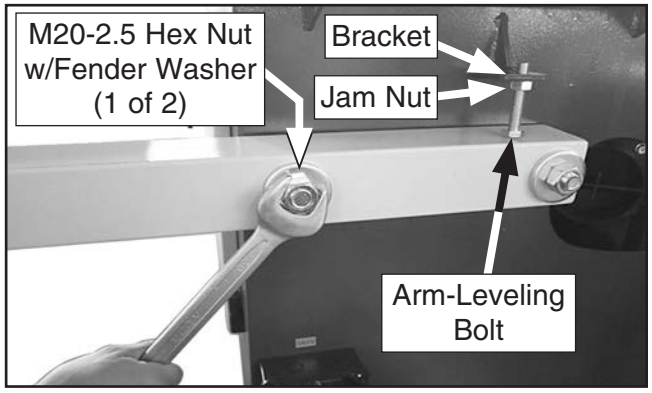

Figure 52. Securing arm-support base.

53. Install arm-support pedestal on arm-support base, using (4) M8-1.25 x 25 cap screws, (4) 8mm lock washers, and (4) 8mm flat washers (see **Figure 53**).

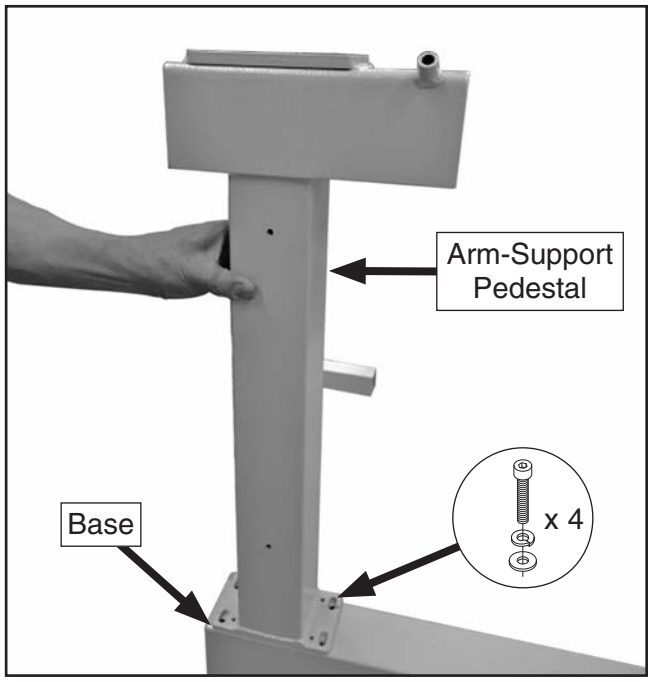

Figure 53. Installing arm-support pedestal.

54. Insert upper support arm into top of arm-support pedestal, as shown in **Figure 54**.

55. Install (1) M10-1.5 x 30 hex bolt into location shown in **Figure 54**. Do not tighten yet.

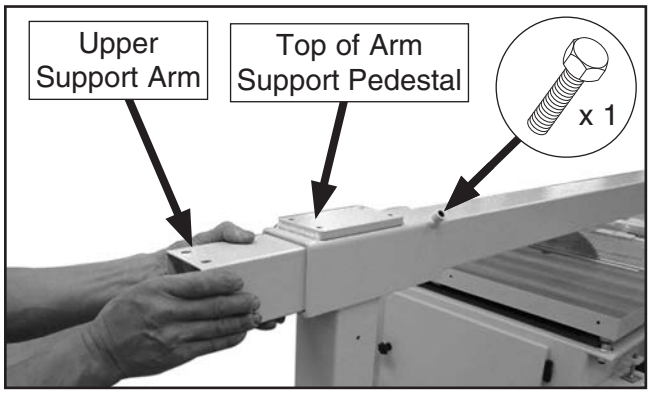

Figure 54. Installing upper support-arm.

56. Install 4" dust port adapter on upper support arm, using (2) M6-1 x 12 button head cap screws, (2) 6mm lock washers, and (2) 6mm flat washers (see **Figure 55**).

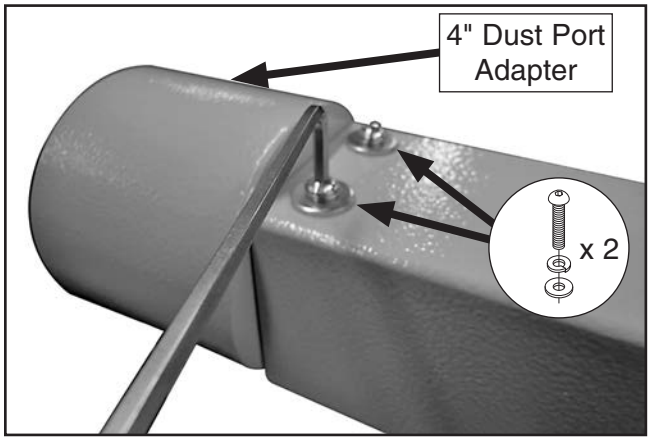

Figure 55. Installing 4" dust port adapter.

57. Attach connection plate assembly with return spring to blade guard using (2) M6-1 lock nuts (see **Figure 56**).

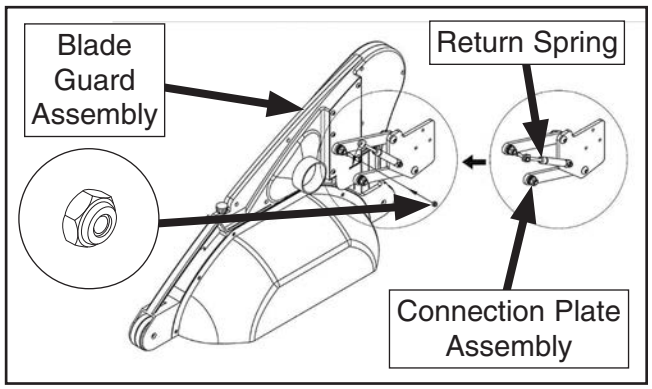

Figure 56. Installing blade guard connection plate assembly onto blade guard assembly.

58. Attach connection plate assembly to end of upper support arm, using (3) M6-1 x 20 cap screws, (3) 6mm lock washers, and (3) 6mm flat washers (see **Figure 57**).

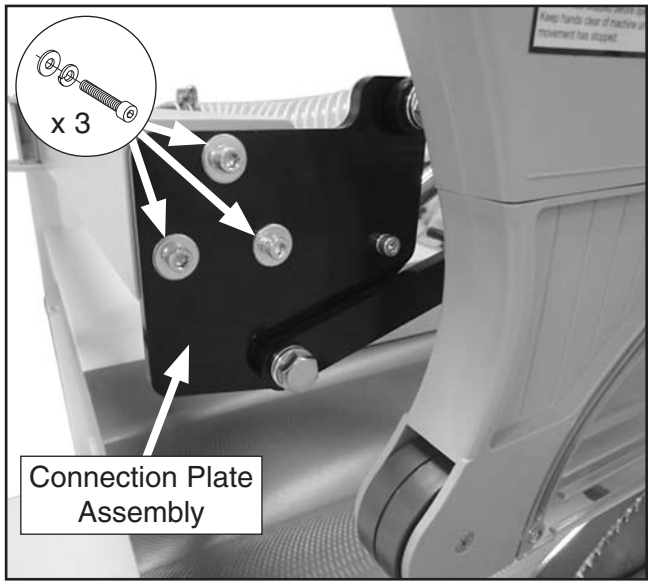

Figure 57. Connection plate assembly attached to upper support arm.

59. Slide upper support arm until at least one blade guard roller is centered over blade (see **Figure 58**), then tighten hex bolt from **Step 55** on **Page 35** to secure upper support arm.

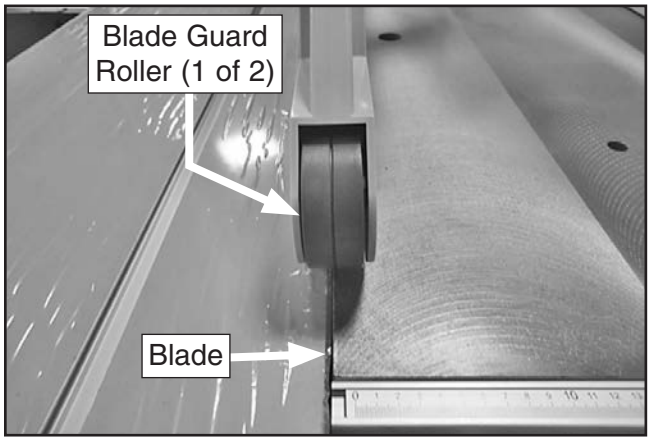

Figure 58. Blade guard rollers centered over blade.

60. Ensure front and rear blade guard rollers are parallel with blade (see **Figure 58**).

—If rollers *are* parallel with blade, proceed to **Step 62**.

—If rollers *are not* parallel with blade, loosen cap screws shown in **Figure 59**, adjust arm-support pedestal until rollers are parallel with blade, then re-tighten cap screws to secure. Check to make sure both blade rollers are centered over blade, and if necessary, loosen hex bolt from **Step 55** on **Page 35**, slide upper support arm until rollers are centered over blade, then re-tighten hex bolt to secure.

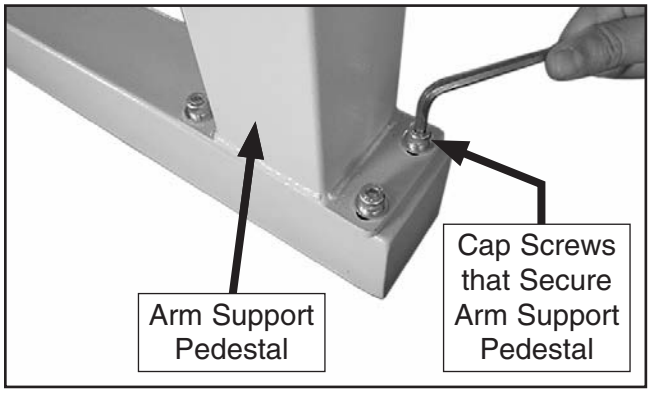

Figure 59. Adjusting alignment of arm-support pedestal.

61. Make sure rollers are parallel with table. If necessary, loosen M20-2.5 hex nuts from **Step 52**, repeat **Steps 50–51** until rollers are parallel with table, then re-tighten hex nuts.

62. Install dust port on upper support arm, using (2) M6-1 x 12 button head cap screws and (2) 6mm lock washers (see **Figure 60**).

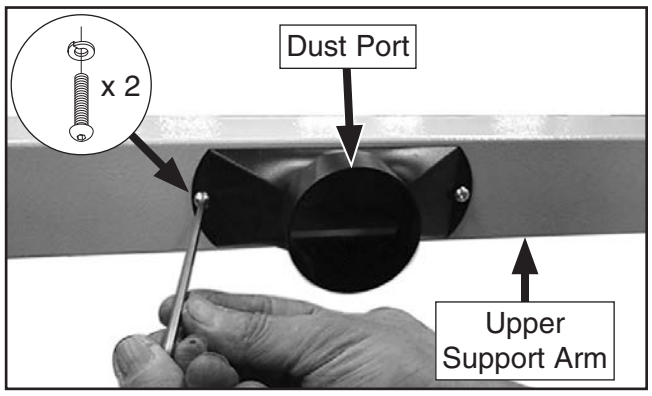

Figure 60. Installing dust port on upper support-arm.

63. Attach dust hose to blade guard and upper support arm dust ports, and secure with hose clamps (see **Figure 61**).

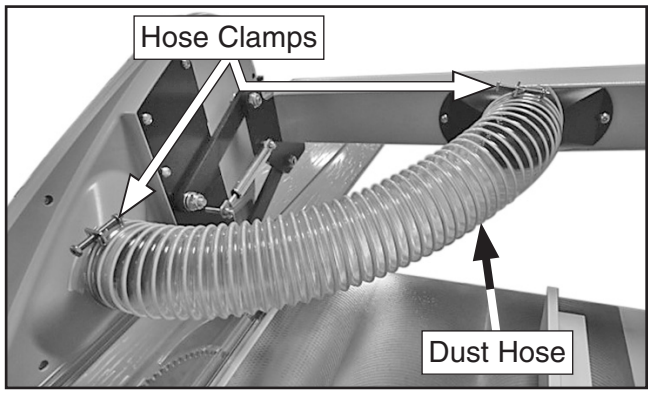

Figure 61. Dust hose attached to blade guard and upper support arm.

64. Tug hose to make sure it is secure. If it pulls off easily, re-install it and tighten hose clamps until it is secure.

Changing Blade Guard For Angled Cuts

The Model G0764Z blade guard comes with two assemblies—a "flat" insert for 90° cuts, and a "bubble" insert for angled cuts. To switch between these two inserts, remove the lock knob shown in **Figure 62**, slide the insert out and replace it with the appropriate insert, then re-install the lock knob to secure the insert.

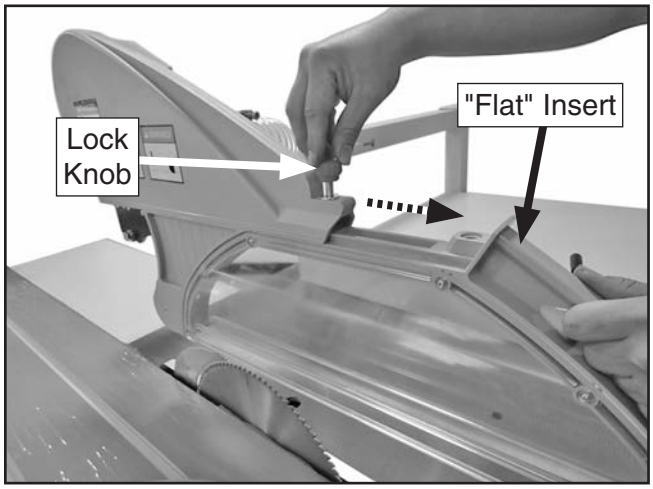

Figure 62. Removing blade guard insert.

Dust Collection

⚠CAUTION

This machine creates a lot of wood chips/dust during operation. Breathing airborne dust on a regular basis can result in permanent respiratory illness. Reduce your risk by wearing a respirator and capturing the dust with a dust-collection system.

Minimum CFM at 5" Dust Port:	**615 CFM**
Minimum CFM at 4" Dust Port:	**400 CFM**

Do not confuse this CFM recommendation with the rating of the dust collector. To determine the CFM at the dust port, you must consider these variables: (1) CFM rating of the dust collector, (2) hose type and length between the dust collector and the machine, (3) number of branches or wyes, and (4) amount of other open lines throughout the system. Explaining how to calculate these variables is beyond the scope of this manual. Consult an expert or purchase a good dust collection "how-to" book.

To connect dust collection hoses:

1. Fit 5" dust hose over dust port on rear side of cabinet, as shown in **Figure 63**, and secure with hose clamp.

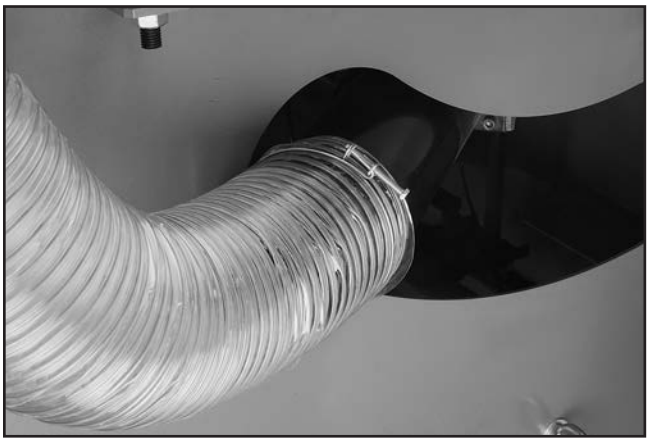

Figure 63. 5" dust hose attached to dust port.

2. Connect 4" dust hose to end of horizontal arm, as shown in **Figure 64,** then attach it to a single dust collection branch line.

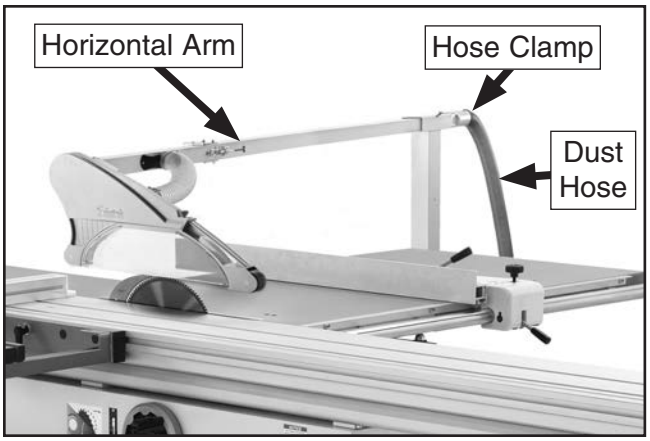

Figure 64. Example of dust hose attached to blade guard.

3. Tug on dust hoses to make sure they do not come off. A tight fit is necessary for proper performance.

Power Connection

Before the machine can be connected to the power source, an electrical circuit and connection device must be prepared per the **POWER SUPPLY** section in this manual; and all previous setup instructions in this manual must be complete to ensure that the machine has been assembled and installed properly. The disconnect switch installed by the electrician (as recommended) is the primary means for disconnecting or connecting the machine to the power source.

Move the disconnect switch handle to the ON position, as illustrated below. The machine is now connected to the power source.

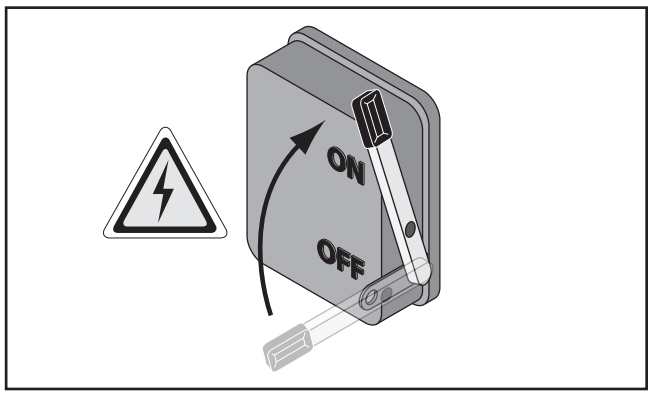

Figure 65. Connecting power to machine.

Move the disconnect switch handle to the OFF position, as illustrated below. The machine is now disconnected from the power source.

Note: *Lock the switch in the OFF position to restrict others from starting the machine.*

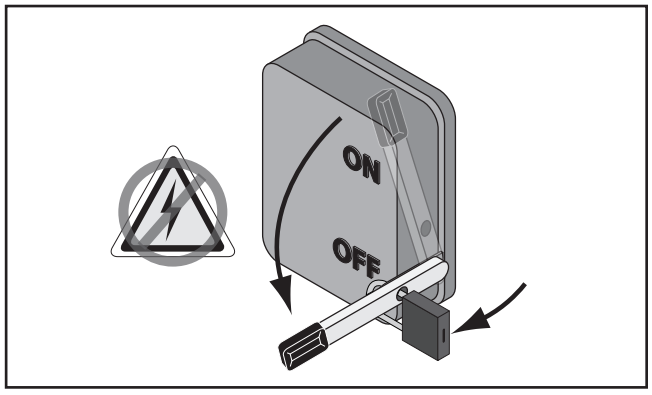

Figure 66. Disconnecting power from machine.

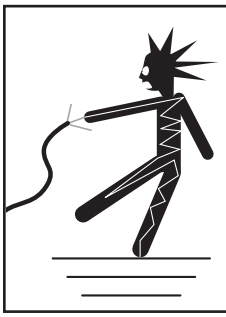

⚠WARNING

Electrocution, fire, shock, or equipment damage may occur if machine is not properly grounded and connected to power supply.

Note About Phase Converters: *Due to the start-up load from this machine, we do not recommend using a static phase converter to create 3-phase power—as it can quickly decrease the life of electrical components on this machine. If you must use a phase converter, only use a rotary phase converter. Only connect the manufactured leg or "wild wire" to the S terminal (see location on* ***Page 81****). The S terminal can handle power fluctuation because it is wired directly to the motor.*

To connect saw to power:

1. Remove power junction box cover (see **Figure 67**).

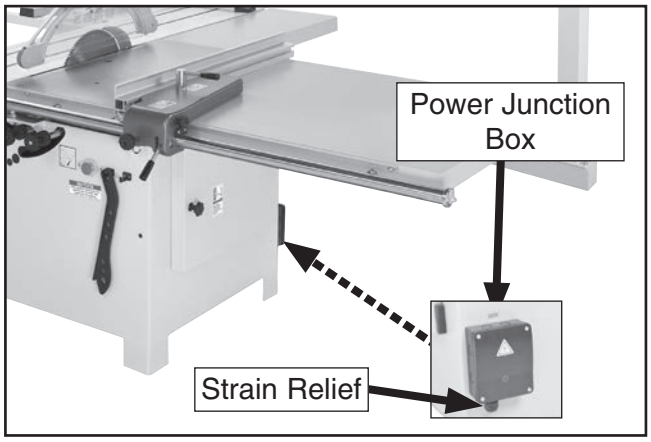

Figure 67. Location of junction box.

2. Insert incoming power wires through strain relief in bottom of power junction box.

3. Connect ground wire, then connect incoming power wires to bottom terminals shown in **Figure 68**.

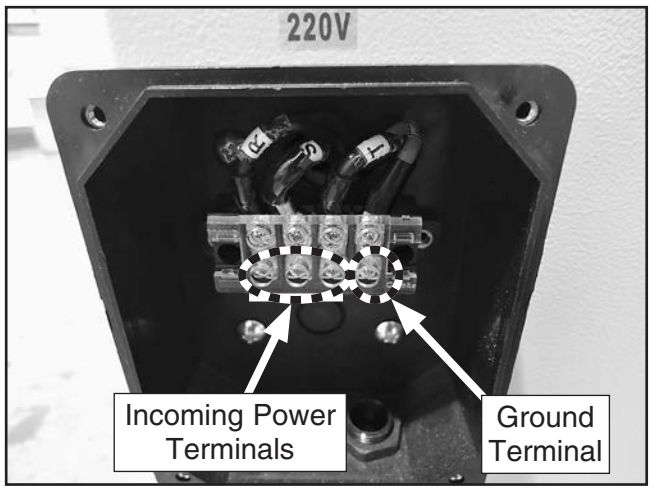

Figure 68. Terminal locations to connect incoming power wires and ground wire.

⚠WARNING

Make sure incoming ground wire is connected to right-most terminal post in the power junction box so machine is properly grounded. An ungrounded or improperly grounded machine may have an electrified frame which could cause electrocution when touched.

4. Make sure wires have enough slack so they are not pulled tight or stretched.

5. Re-install junction box cover, and perform **Test Run** in following section to check phase polarity.

Test Run

Once assembly is complete, test run the machine to ensure it is properly connected to power and safety components are functioning correctly.

If you find an unusual problem during the test run, immediately stop the machine, disconnect it from power, and fix the problem BEFORE operating the machine again. The **Troubleshooting** table in the **SERVICE** section of this manual can help.

The test run consists of verifying the following: 1) The motors power up and run correctly, 2) the safety features of the Emergency Stop buttons work correctly, and 3) the main blade turns forward (clockwise when viewed from front of saw) and the scoring blade turns opposite main blade.

⚠WARNING

DO NOT start machine until all preceding setup instructions have been performed. Operating an improperly set up machine may result in malfunction or unexpected results that can lead to serious injury, death, or machine/property damage.

To test run machine:

1. Make sure you understand all safety instructions at the beginning of manual and that machine is set up properly.

2. Make sure all tools and objects used during setup are cleared away from machine.

3. Connect saw to power.

4. Push Emergency Stop button, then twist it clockwise so it pops out. When button pops out, switch is reset and will allow operation (see **Figure 69**).

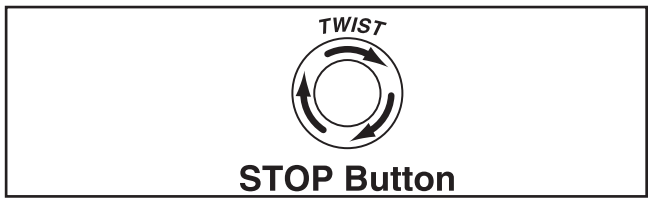

Figure 69. Resetting Emergency Stop button.

5. Verify saw is operating correctly by pushing Main Blade and Scoring Blade ON buttons (refer to **Figure 4** on **Page 5**).

   —When operating correctly, machine runs smoothly with little or no vibration or rubbing noises.

   —Investigate and correct strange or unusual noises or vibrations before operating machine further. Always stop machine and disconnect it from power before investigating or correcting potential problems.

6. Verify main blade is rotating clockwise (as standing in front of machine) and scoring blade is rotating counterclockwise (opposite direction as main blade).

   Note: *You may need to stop the blade rotation and watch them come to a stop to determine which direction they are rotating.*

   —If blades are rotating in wrong direction, stop machine and DISCONNECT FROM POWER! Polarity of incoming power supply is reversed. Swap "R" and "T" wire positions inside junction box (see **Figure 70**), then replace junction box cover, and reconnect machine to power.

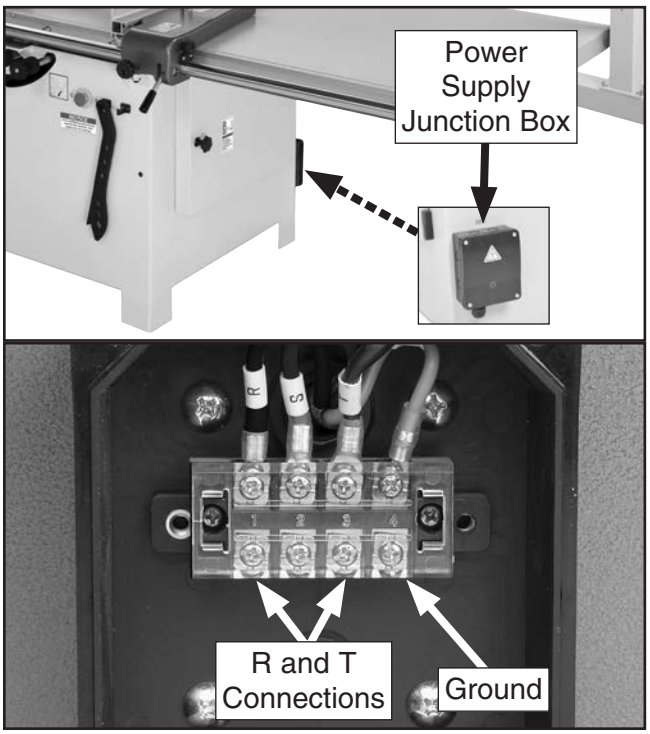

Figure 70. Up-close view of power supply terminal inside junction box.

⚠WARNING

Do not swap "R" or "T" wires with ground wire inside power supply junction box. Doing so will electrify machine frame, which could cause electrocution. Make sure incoming ground wire is only connected to right-most terminal post in the power supply junction box so machine is properly grounded.

7. Press Emergency Stop button on front of machine to turn machine ***OFF***.

8. WITHOUT resetting Emergency Stop button, press either ON button. Machine should *not* start.

—If machine *does* start (with Emergency Stop button pushed in), immediately disconnect power to machine. Emergency Stop button safety feature is not working correctly. This safety feature must work properly before proceeding with regular operations. Call Tech Support for help.

9. Reset Emergency Stop button on front of machine.

10. Repeat **Steps 7–9** with Emergency Stop button on side of cabinet. Congratulations. **Test Run** is complete!

Recommended Adjustments

The following list of adjustments were performed at the factory before the machine was shipped:

- Riving Knife Alignment ..... **Page 46**
- Aligning Scoring Blade ..... **Page 53**
- Blade Tilt Calibration .....**Page 74**
- Sliding Table Parallel Adjustment....**Page 75**
- Sliding Table Movement Adjustment.....**Page 76**
- Squaring Crosscut Fence to Blade .....**Page 76**
- Calibrating Rip Fence.....**Page 79**

Be aware that machine components can shift during the shipping process. Pay careful attention to these adjustments during operation of the machine. If you find that the adjustments are not set according to the procedures in this manual or your personal preferences, re-adjust them.

SECTION 4: OPERATIONS

Operation Overview

The purpose of this overview is to provide the novice machine operator with a basic understanding of how the machine is used during operation, so the machine controls/components discussed later in this manual are easier to understand.

Due to the generic nature of this overview, it is **not** intended to be an instructional guide. To learn more about specific operations, read this entire manual, seek additional training from experienced machine operators, and do additional research outside of this manual by reading "how-to" books, trade magazines, or websites.

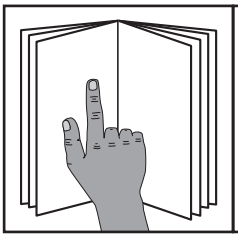

⚠WARNING

To reduce your risk of serious injury, read this entire manual BEFORE using machine.

⚠WARNING

Eye injuries, respiratory problems, or hearing loss can occur while operating this tool. Wear personal protective equipment to reduce your risk from these hazards.







NOTICE

The Model G0764Z does not ship with a 14" main blade. Refer to *Blade Requirements* and *Blade Selection* beginning on *Page 47* when purchasing the main blade.

To complete a typical operation, the operator does the following:

1. Examines workpiece to make sure it is suitable for cutting.
2. Adjusts blade tilt, if necessary, to correct angle of desired cut.
3. Adjusts blade height approximately ¼" higher than thickness of the workpiece.
4. Adjusts fence to desired width of cut then locks it in place.
5. Adjusts blade guard for workpiece height.
6. Checks outfeed side of machine for proper support and to make sure the workpiece can safely pass all the way through the blade without interference.
7. Puts on safety glasses and a respirator. Locates push sticks if needed.
8. Feeds the workpiece all the way through blade while maintaining firm pressure on workpiece against table and fence.
9. Turns machine ***OFF*** immediately after cut is complete and waits for blades to completely stop before removing workpieces.

NOTICE

If you are not experienced with this type of machine, WE STRONGLY RECOMMEND that you seek additional training outside of this manual. Read books/magazines or get formal training before beginning any projects. Regardless of the content in this section, Grizzly Industrial will not be held liable for accidents caused by lack of training.

Workpiece Inspection

Some workpieces are not safe to cut on this machine or may need to be modified before they can be safely cut. **Before cutting, inspect all workpieces for the following:**

- ***Material Type:*** This machine is intended for cutting natural and man-made wood products, laminate-covered wood products, and some plastics. Cutting drywall or cementitious backer board creates extremely fine dust and may reduce the life of the motor bearings. This machine is NOT designed to cut metal, glass, stone, tile, etc.; cutting these materials with a table saw greatly increases the risk of injury and damage to the saw or blade.

- ***Foreign Objects:*** Nails, staples, dirt, rocks and other foreign objects are often embedded in wood. While cutting, these objects can become dislodged and hit the operator, cause kickback, or break the blade, which might then fly apart. Always visually inspect your workpiece for these items. If they can't be removed, DO NOT cut the workpiece.

- ***Large/Loose Knots:*** Loose knots can become dislodged during the cutting operation. Large knots can cause kickback and machine damage. Choose workpieces that do not have large/loose knots or plan ahead to avoid cutting through them.

- ***Wet or "Green" Stock:*** Cutting wood with a moisture content over 20% causes unnecessary wear on the blades, increases the risk of kickback, and yields poor results.

- ***Excessive Warping:*** Workpieces with excessive cupping, bowing, or twisting are dangerous to cut because they are unstable and may move unpredictably when being cut.

- ***Minor Warping:*** Slightly cupped workpieces can be safely supported with cupped side facing the table or fence; however, workpieces supported on the bowed side will rock

Through & Non-Through Cuts

Through Cuts

A through cut is a sawing operation in which the workpiece is completely sawn through, as shown in the **Figure** below. Examples of through cuts are rip cuts, cross cuts, miter cuts, and beveled cuts. The blade guard assembly MUST be used when performing through cuts.

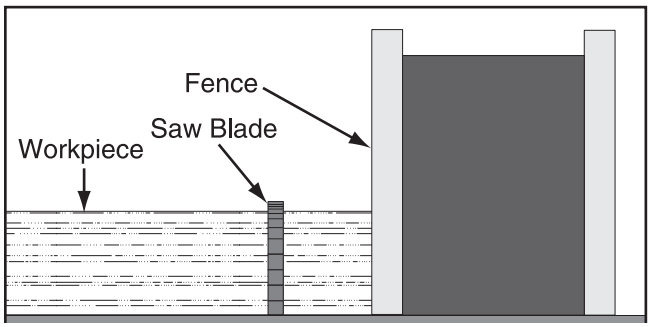

Figure 71. Example of a through cut (blade guard not shown for illustrative clarity).

Non-Through Cuts

A non-through cut is a sawing operation where the blade does not protrude above the top face of the wood stock, as shown in the **Figure** below. The blade guard assembly MUST be used when performing all non-through cuts, except when the guard will not safely accommodate the workpiece.

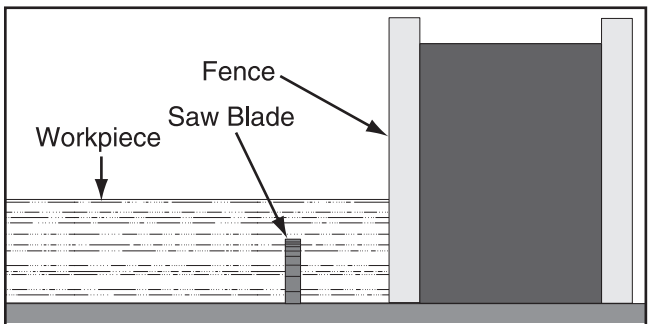

Figure 72. Example of a non-through cut.

Blade Guard

The term "blade guard" refers to the assembly shown in **Figure 73**.

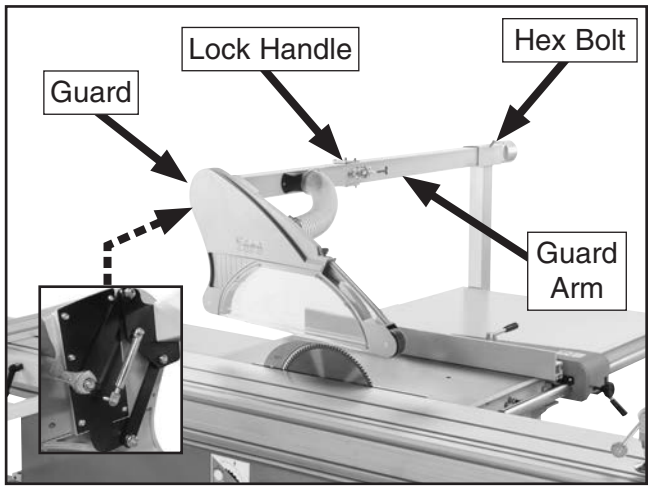

Figure 73. Blade guard assembly.

Understanding & Using Blade Guard

The blade guard MUST be installed on the saw for all cuts (see **Page 14**). The guard encloses the top of the blade to reduce the risk of accidental blade contact and contain flying chips or dust. When installed and properly maintained, it is an excellent tool for reducing the risk of injury when operating the table saw.

Sometimes the guard or its components can get in the way when cutting very narrow workpieces or other specialized cuts. Use the lock handle shown in **Figure 73** to move the guard out of the way. The blade guard MUST remain installed on saw. If blade guard is removed for specific operations, always replace it immediately after those operations are complete.

As the workpiece is pushed into the blade, the guard lifts and remains in contact with the workpiece during the cut, then returns to a resting position against the table when workpiece is pushed completely past the guard.

To ensure that the guard does its job effectively, it MUST be centered over blade and properly adjusted so it moves up and down to accommodate workpieces, yet properly maintains blade after the workpiece exits.

Adjusting Blade Guard

Loosen the hex bolt securing the guard arm (see **Figure 73**), and adjust the guard so the distance between the blade and both side covers is equal.

For stock up to 1" thick, loosen the (4) lock nuts securing guard to guard arm, (see inset image in **Figure 73**), ¼-turn each so the blade guard moves smoothly up and down with the workpiece. For stock thicker than 1", set the guard to rest on the workpiece, then tighten the (4) lock nuts.

IMPORTANT: Every time the blade guard is re-installed, you must verify that it functions correctly before making a cut.

To test blade guard operation, lift the front end all the way up, then release it. The blade guard should freely drop down and both wheels should contact table surface.

If blade guard remains in the same position where you released it, loosen lock nuts securing blade guard upper guard arm, and re-test operation until guard freely drops all the way down.

Guard Covers

The G0764Z features two dust hood assemblies for either straight cuts or angled cuts. Use the flat blade cover when performing straight (90°) cuts or the bubble cover for angled cuts. To change between covers, remove lock knob (see **Figure 74**) then secure the guard assembly to the dust hood, install the other cover, and re-tighten the lock knob.

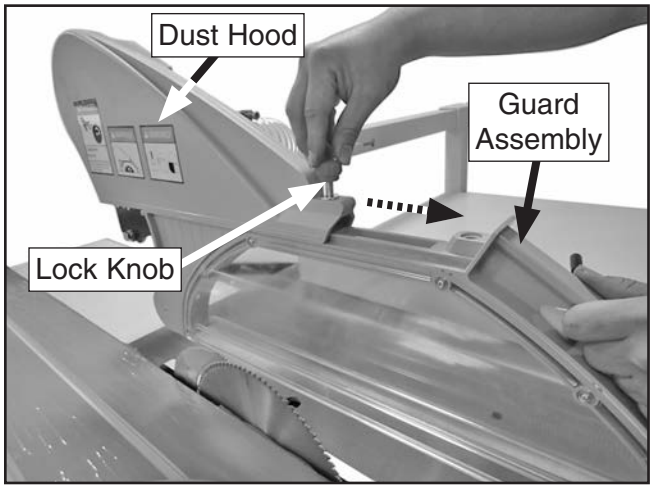

Figure 74. Removing blade guard assembly.

Riving Knife

The riving knife (see **Figure 75**) is a metal plate that prevents the freshly cut pieces of the workpiece from pinching the backside of the blade and causing a kickback. It also acts as a barrier behind the blade to shield hands from being pulled into the blade if a kickback occurs and the operator is reaching behind the blade. (Reaching behind blade is a major safety risk and should never be done). Use riving knife for all operations.

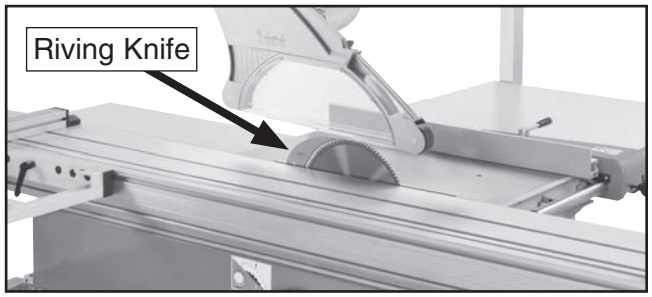

Figure 75. Riving knife location.

⚠WARNING

To ensure riving knife works safely, it MUST be aligned with and correctly adjusted to blade.

Riving Knife Installation & Removal

The riving knife must be correctly installed, adjusted, and aligned in order to provide the maximum safety benefit.

The riving knife attaches to the mounting block as shown in **Figure 76**. Always firmly tighten the hex nut when securing the riving knife in place.

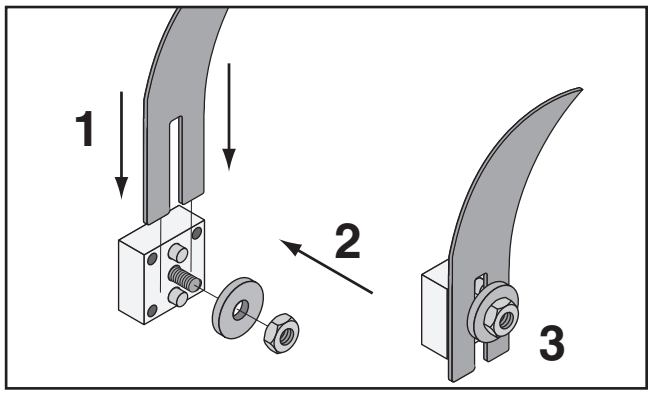

Figure 76. Installing riving knife on mounting block.

Secure the riving knife so that the top of it is 1–5mm below the top level of the blade, as shown in **Figure 77**.

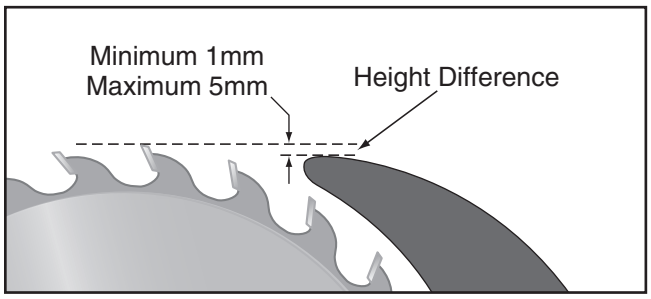

Figure 77. Height difference between riving knife and blade.

The height difference between the riving knife and the blade allows the workpiece to pass over the blade during non-through cuts (those in which the blade does not cut all the way through the thickness of the workpiece).

The riving knife also prevents the freshly cut sides of the workpiece from pinching the blade and causing kickback. For maximum effectiveness of this safety design, the riving knife must be positioned within 3–8mm of the blade, as shown in **Figure 78**.

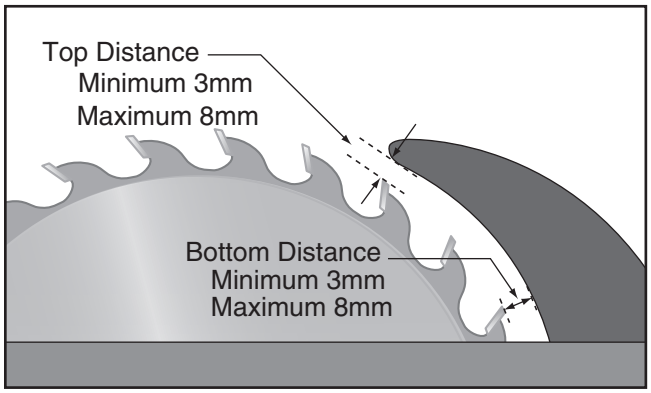

Figure 78. Allowable top and bottom distances between riving knife and blade.

Once the riving knife is properly positioned at the correct distance from the blade, verify that it is aligned with the blade by checking the alignment with a straightedge in the top and bottom locations shown in **Figure 79**.

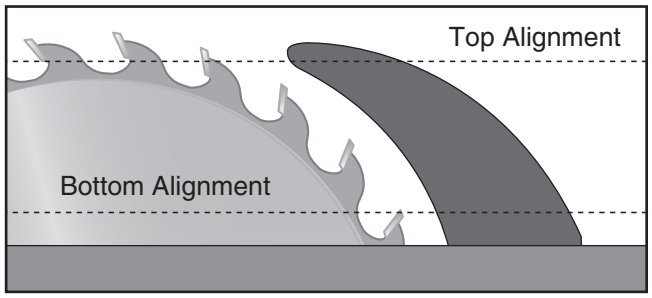

Figure 79. Checking top and bottom riving knife alignment with blade.

The riving knife should be parallel with the blade along its length at both positions and should be in the "Alignment Zone" shown in **Figure 80**.

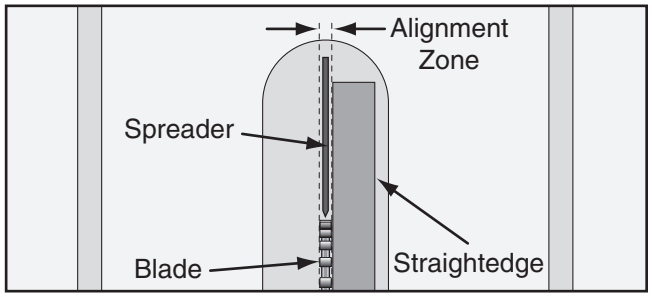

Figure 80. Verifying that riving knife is in the alignment zone behind the blade.

If the riving knife is not aligned or parallel with the blade, refer to **Riving Knife Mounting Block** on **Page 78**.

Blade Requirements

The riving knife included with this machine is 0.10" (2.5mm) thick and is only designed for 14" diameter blades.

When choosing a main blade, make sure the blade size meets the requirements listed below. The thickness of the blade body and teeth can be measured with calipers or any precision measuring device.

Blade Size Requirements:

- Body Thickness: 0.079"–0.094" (2.0mm–2.4mm)
- Kerf (Tooth) Thickness: 0.102"–0.126" (2.6mm–3.2mm)

Blade Selection

This section on blade selection is by no means comprehensive. Always follow the saw blade manufacturer's recommendations to ensure safe and efficient operation of your table saw.

Ripping Blade Features:

- Best for cutting with the grain
- 30-40 teeth
- Flat-top ground tooth profile
- Large gullets for large chip removal

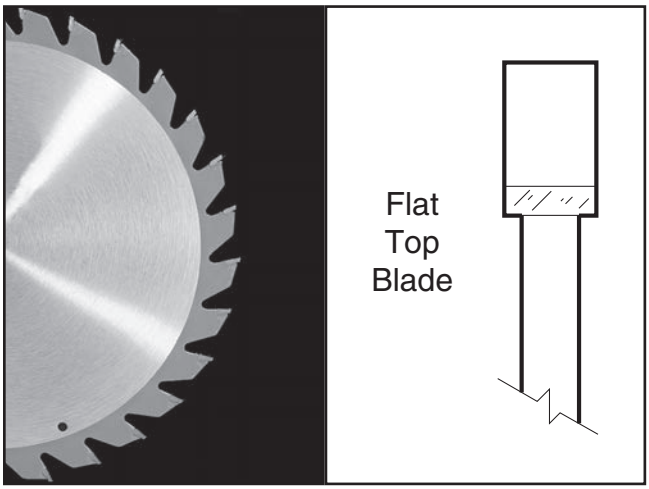

Figure 81. Ripping blade.

Crosscut blade features:
- Best for cutting across the grain
- 80–100 teeth
- Alternate top bevel tooth profile
- Small hook angle and a shallow gullet

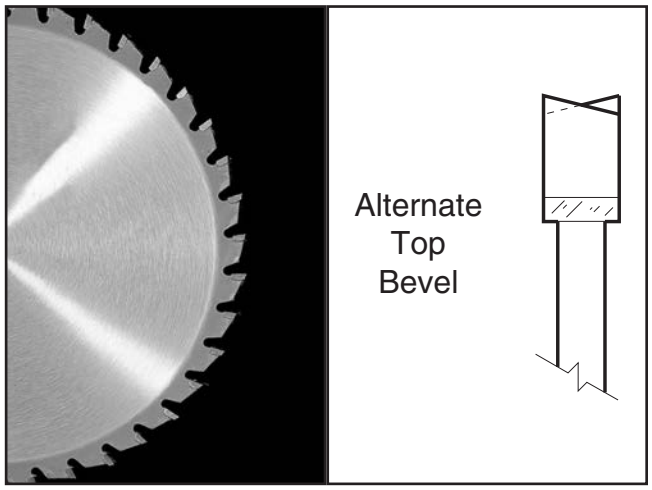

Figure 82. Crosscutting blade.

Combination blade features:
- Designed to cut both with and across grain
- 50–80 teeth
- Alternate top bevel and flat, or alternate top bevel and raker tooth profile
- Teeth are arranged in groups
- Gullets are small and shallow (similar to a cross-cut blade), then large and deep (similar to a ripping blade

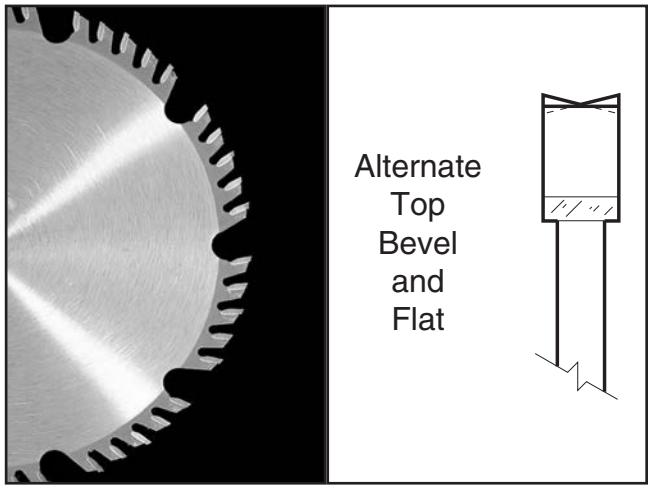

Figure 83. Combination blade.

Laminate blade features:
- Best for cutting plywood or veneer
- 100–120 teeth
- Triple chip tooth profile
- Very shallow gullet

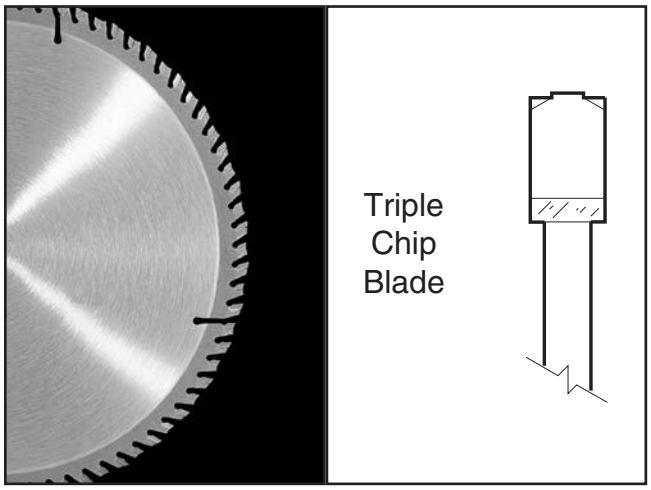

Figure 84. Laminate blade.

Thin Kerf Blade: A blade with thinner kerf than a standard blade. Since the spreader/riving knife included with this table saw is sized for standard blades, thin kerf blades cannot be used on this saw.

Changing Speed

The Model G0764Z has three main blade speeds—3000, 4000, and 5000 RPM. These speeds are selected by repositioning the main motor belts on the pulleys.

Items Needed **Qty**
Wrench 22mm 1

To change main blade speed:

1. DISCONNECT MACHINE FROM POWER!

2. Open motor cabinet door and locate motor adjustment lever shown in **Figure 85**.

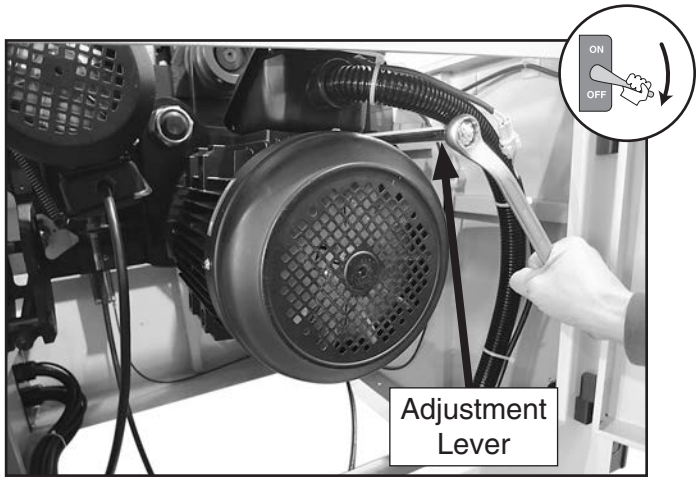

Figure 85. Location of main motor adjustment lever.

3. Rotate motor adjustment lever clockwise to release belt tension.

4. Inspect the belt. If there is any evidence of damage or excessive wear, replace it.

5. Position belt on correct arbor and motor pulley set for desired speed (refer to **Figure 86** for pulley identification).

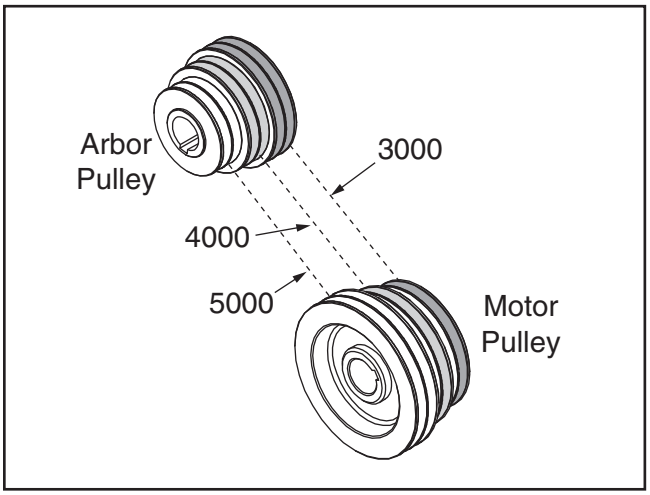

Figure 86. Belt positions for each speed.

6. Rotate motor adjustment lever counterclockwise to retension belt.

7. Close motor cabinet door before reconnecting machine to power.

Changing Main Blade

The Model G0764Z performs best when using sharp, high-quality blades. Whenever the main blade starts to get dull, resharpen it or replace it with a new blade.

NOTICE

The Model G0764Z does not ship with a 14" main blade. Refer to *Blade Requirements* and *Blade Selection* beginning on *Page 47* when purchasing the main blade.

Tools Needed	Qty
Wrench 36mm	1
Blade Locking Tool	1

To change the main blade:

1. DISCONNECT MACHINE FROM POWER!
2. Adjust main blade tilt to 0° and raise blade all the way up.
3. Raise blade guard up.
4. Move sliding table all the way forward to expose blade cover.
5. Pull blade cover away from blade to disengage magnetic catches (see **Figure 87**).

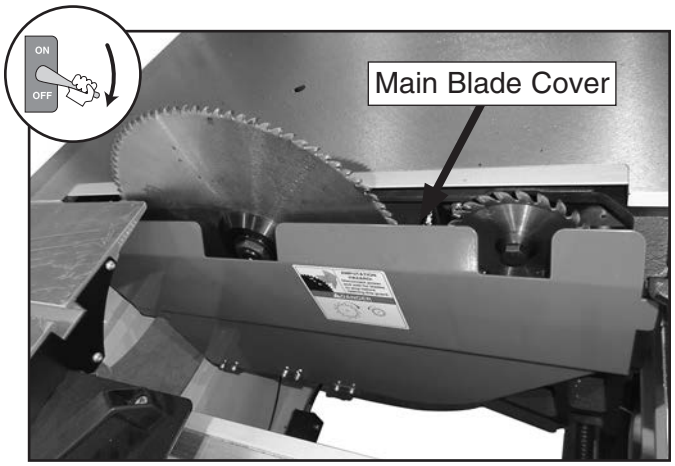

Figure 87. Main blade cover in closed position.

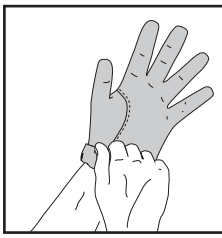

⚠CAUTION

Always wear leather gloves when working around the blades to protect your hands.

6. Insert arbor locking tool into table hole shown in **Figure 88**.

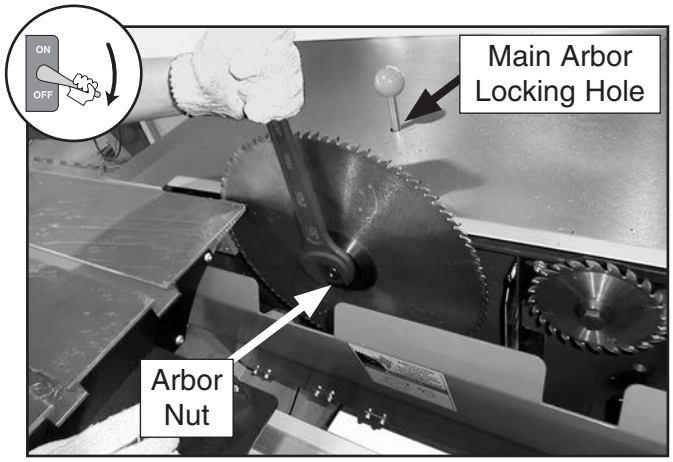

Figure 88. Loosening the main blade arbor nut.

7. Push down on locking pin with one hand as you rotate blade clockwise with wrench on arbor nut. This will force blade locking pin into arbor indent and prevent blade from rotating.
8. Continue unthreading arbor nut clockwise (left-hand threads) until you can remove the nut, flange, and blade (see **Figure 89**).

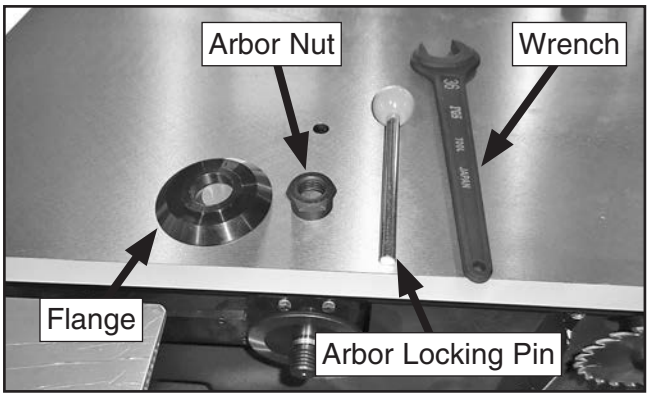

Figure 89. Main saw blade and arbor parts.

9. Slide replacement blade over arbor with teeth facing to the right, then replace flange.

10. Thread arbor nut on counterclockwise and fully tighten it to secure the assembly (see **Figure 90** for order of assembly).

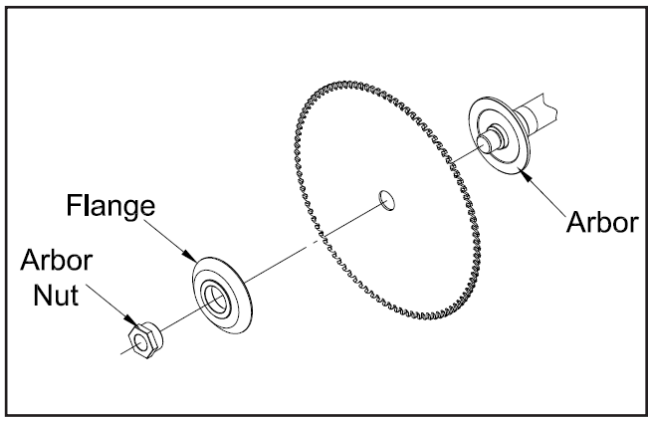

Figure 90. Order of assembly for main blade.

11. Recheck the riving knife alignment with blade, as instructed in next subsection.

12. Close blade cabinet door, close blade cover, reposition blade guard over blade, then move sliding table back to center of machine.

Replacing & Aligning Scoring Blade

The scoring blade rotates in the opposite direction from the main blade and makes a shallow cut into the workpiece surface. This prevents workpiece tearout.

The scoring blade included with the Model G0764Z has wedge-shaped teeth that narrow at the top, as shown in **Figure 91**. With this style of scoring blade, the kerf thickness is adjusted by changing the height of the scoring blade. Raising the scoring blade higher increases the kerf thickness.

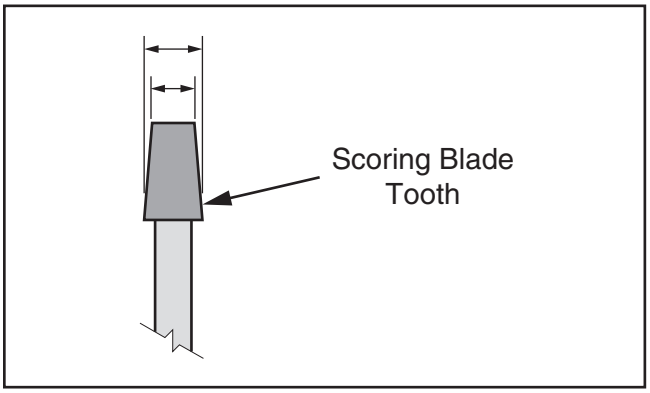

Figure 91. Scoring blade tooth that narrows at the top.

Replacing Scoring Blade

Tools Needed	Qty
Wrench 19mm	1
Blade Locking Tool	1

To replace scoring blade:

1. DISCONNECT MACHINE FROM POWER!

2. Adjust blade tilt to 0° and raise blade all the way up.

3. Raise blade guard up and move it away from blade.

4. Move sliding table all the way forward to expose blade cover.

5. Pull blade cover toward front of machine to disengage magnetic catch.

6. Slide arbor wrench behind scoring blade (see **Figure 92)** to prevent blade from spinning.

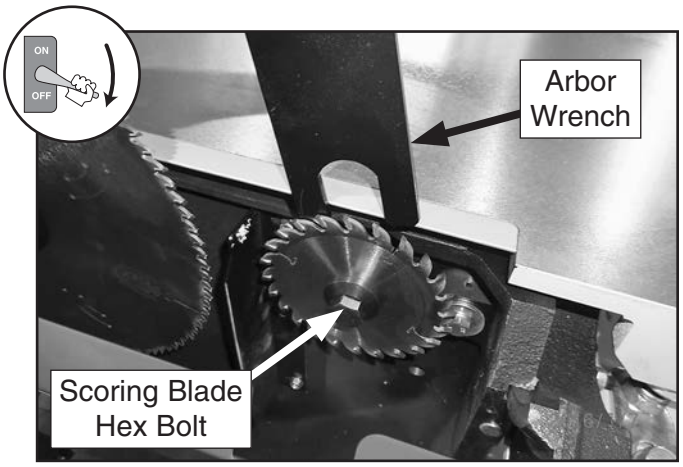

Figure 92. Inserting arbor wrench behind scoring blade to prevent blade from spinning.

7. Use 19mm wrench to unthread arbor hex bolt counterclockwise (left-hand threads), and remove arbor hex bolt, flange, and blade (see **Figure 93**).

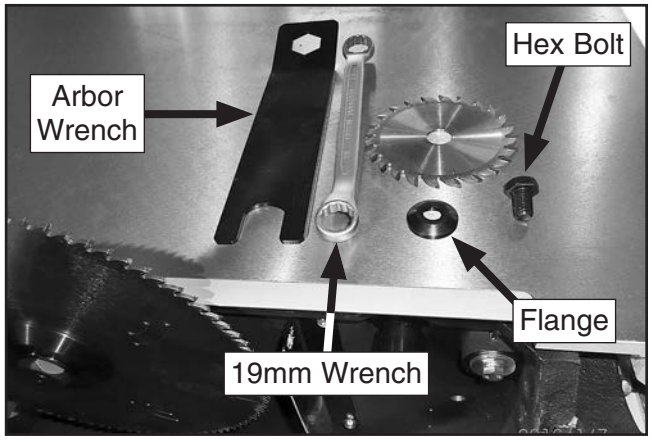

Figure 93. Scoring blade, flange, arbor hex bolt, 19mm wrench, and arbor wrench.

8. Slide replacement scoring blade over arbor with teeth facing to the left, then replace flange.

9. Thread arbor hex bolt on clockwise and fully tighten it to secure the assembly (see **Figure 94** for order of assembly).

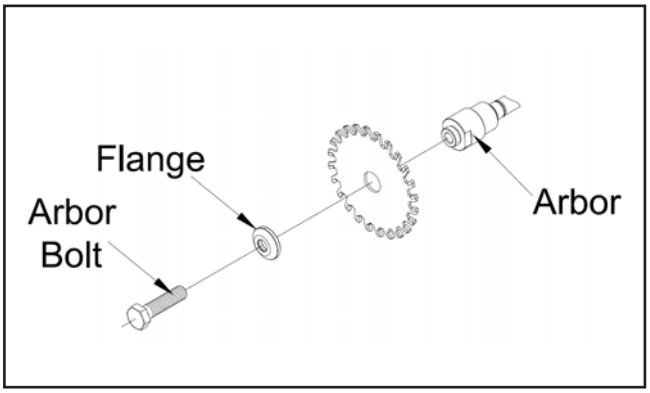

Figure 94. Scoring blade order of assembly.

10. Adjust scoring blade to main blade, as instructed in the next subsection.

Aligning Scoring Blade

1. DISCONNECT MACHINE FROM POWER!

2. Adjust main blade tilt to 0° and raise blade all the way up.

3. Raise blade guard up and move it away from blade.

4. Align scoring blade body horizontally to main blade body by:

   a. Rotating knurled lock collar shown in **Figure 95** counterclockwise to loosen it.

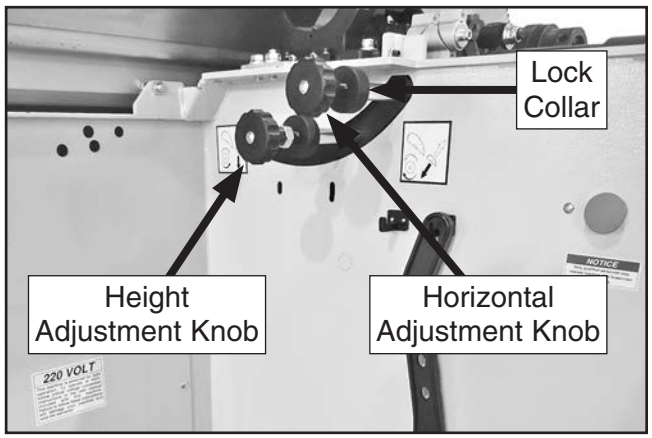

Figure 95. Scoring blade adjustment controls.

   b. Positioning straightedge against the flat of main blade body (not teeth) and extending it over scoring blade body.

   c. Rotating horizontal adjustment knob to align bodies of blades.

   Note: *Rotating knob clockwise moves scoring blade to the left and counterclockwise moves it to the right.*

   d. Tightening lock collar clockwise to secure setting.

5. Align scoring blade kerf to main blade kerf by:

   a. Positioning straightedge on one side of main blade flat on table and against main blade and scoring blade teeth.

   b. Rotating knurled lock collar behind height adjustment knob (see **Figure 95** on previous page) counterclockwise to loosen it.

   c. Using height adjustment knob to adjust scoring blade so that the edge of scoring blade teeth are aligned with main blade teeth.

   Note: *Rotating knob clockwise lowers scoring blade and counterclockwise raises it.*

   d. Tightening lock collar clockwise to secure setting.

6. Repeat **Step 5** for other side of blades to verify kerf thickness matches and scoring blade is aligned with main blade.

7. Close blade cover, properly reposition blade guard, and slide table back to center of machine.

8. Perform a test cut and check for chip-out.

   —If there is chip-out, repeat this procedure until corrected.

Setting Up Crosscut Fence

Before using the crosscut fence to perform cutting operations, it must be setup properly. This includes positioning the crosscut fence on the crosscut table, adjusting the support bar, adjusting the crosscut fence distance from the blade, and positioning the crosscut table along the sliding table.

Positioning Crosscut Fence

The crosscut fence can be mounted in the front or rear position (see **Figure 96**) depending upon the size of the workpiece and which position will provide the safest operation. The support bar is adjusted accordingly for maximum workpiece support.

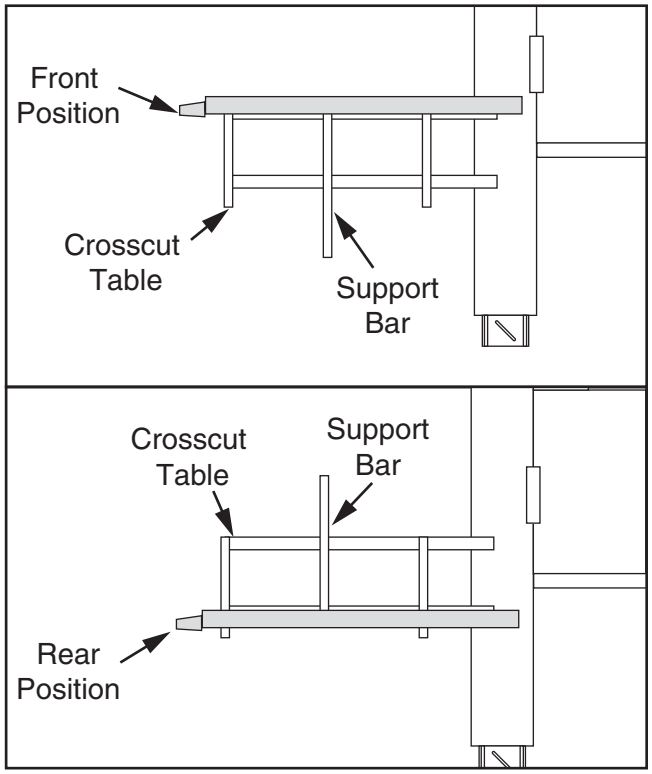

Figure 96. Crosscut fence front and rear table mounting positions.

Whenever the crosscut fence is moved between the front and rear positions, you must verify the fence is square to the blade, and the 0° stop bolts are properly adjusted before using the fence. Refer to **Squaring Crosscut Fence to Blade** on **Page 76** for further details.

The support bar can also be installed in either the inside or outside positions (see **Figure 97**).

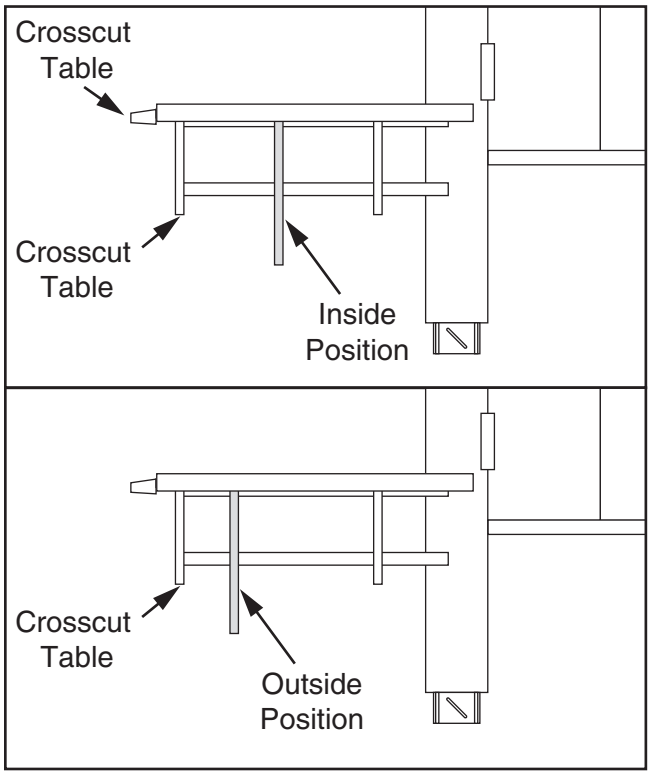

Figure 97. Inside and outside support bar positions.

To position crosscut fence:

1. DISCONNECT MACHINE FROM POWER!

2. Unthread and remove knob bolts shown in **Figure 98**.

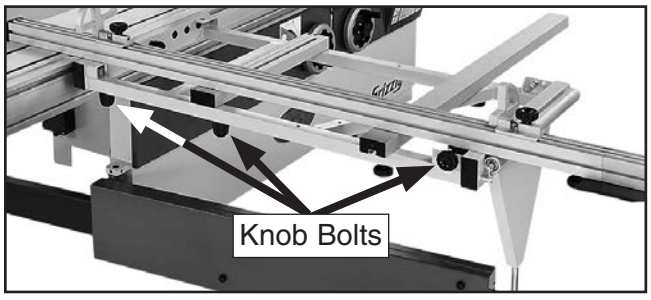

Figure 98. Locations of knob bolts securing crosscut fence.

3. Lift fence up and loosen pivot bolt (see **Figure 99**).

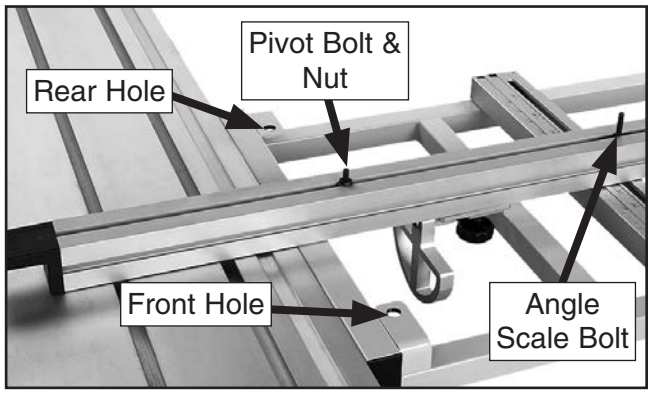

Figure 99. Crosscut fence pivot bolt and nut.

4. Re-insert pivot bolt into front hole or rear hole, and re-insert angle scale bolt into angle scale slot.

5. Rotate fence so stop block is against 0° stop bolt (see **Figure 100**).

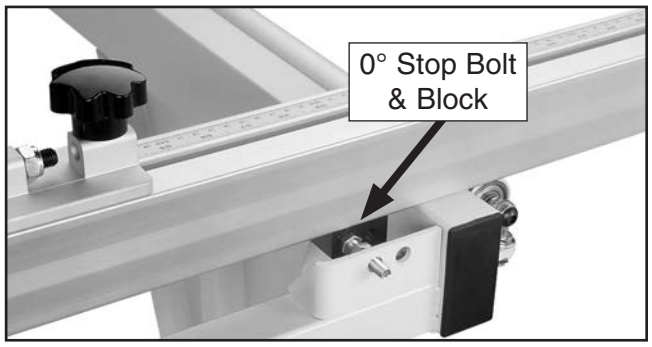

Figure 100. Stop block against 0° stop bolt.

6. Loosen support bar knob bolts shown in **Figure 101**, slide support bar into position required for operation, then tighten knob bolts.

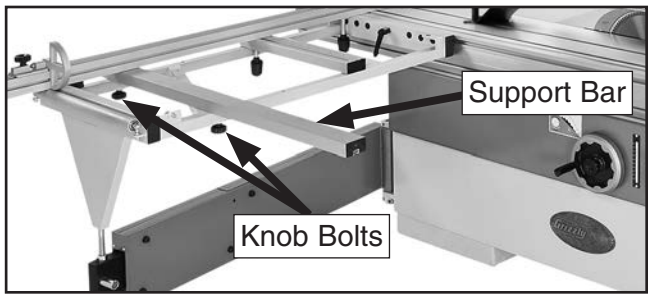

Figure 101. Locations of knob bolts for adjusting support bar position.

Adjusting Crosscut Fence Distance from Blade

To accurately use the crosscut fence scale and ensure the end block does not contact the blade, the distance between the crosscut fence and the blade must be properly adjusted.

To adjust distance between crosscut fence and blade:

1. DISCONNECT MACHINE FROM POWER!

2. Perform "To Position Crosscut Fence" procedure starting on **Page 54**.

3. Move crosscut table (refer to **Positioning Crosscut Table Along Sliding Table** on **Page 56** for instructions) so fence end block is aligned with center of blade (see **Figure 102**).

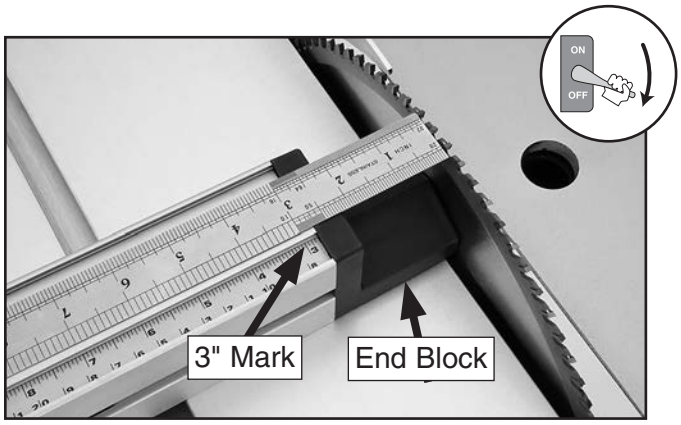

Figure 102. End block aligned with blade.

4. Place precision ruler against a blade tooth, as shown in **Figure 102**, then adjust fence so that 3" mark on fence scale is exactly 3" from blade tooth.

5. Without disturbing pivot bolt position, lift fence up (see **Figure 99**), tighten pivot bolt nut, then re-insert pivot bolt into hole.

6. Repeat measurement in **Step 3**.

   —If measurement is not exactly 3", repeat **Steps 2–10** until it is.

7. Re-install knob bolts removed earlier to secure setting.

Positioning Crosscut Table Along Sliding Table

The crosscut table can be positioned as necessary along the sliding table (see **Figure 103**).

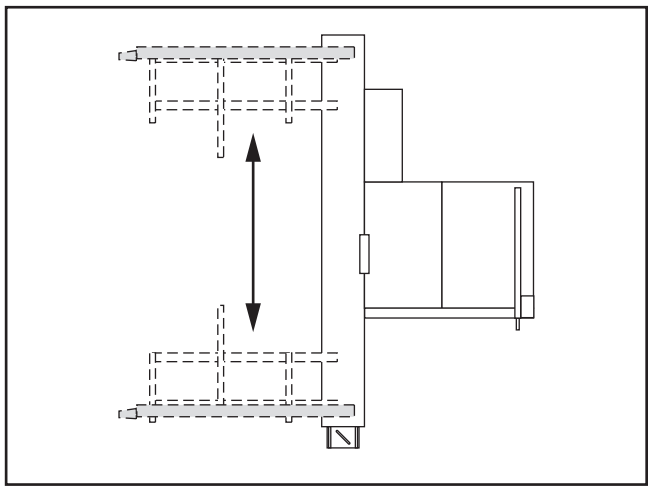

Figure 103. Crosscut table positions along sliding table.

To position crosscut table along sliding table:

1. DISCONNECT MACHINE FROM POWER!

2. Use sliding table lock lever (see **Figure 104**) to secure table in position.



Figure 104. Location of sliding table lock lever.

3. Loosen crosscut table lock lever shown in **Figure 105**.

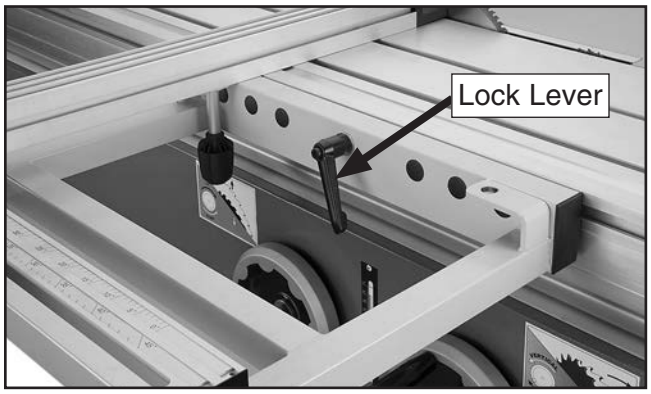

Figure 105. Location of crosscut table lock lever.

4. Position crosscut table along sliding table T-slot to desired position, then retighten lock lever to secure table.

Rip Cutting

The Model G0764Z has the capability of rip cutting large panels (see **Figure 106**). The sliding table removes the burden of sliding a large and heavy panel over a stationary table surface.

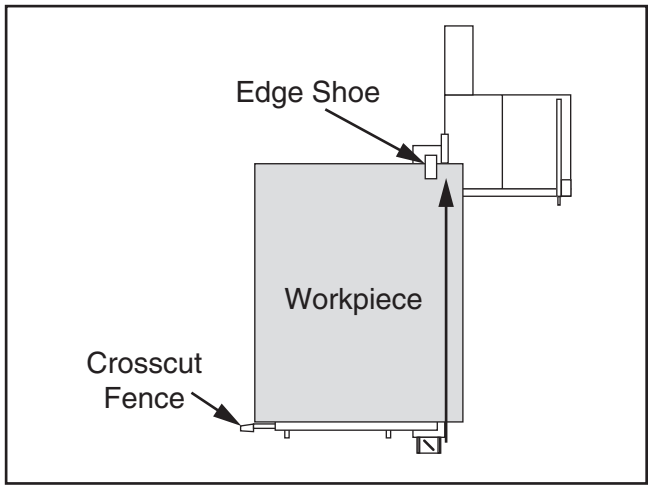

Figure 106. Rip cut with sliding table and crosscut fence.

The edge shoe (see **Figure 106**) is used to stabilize the front end of a workpiece when otherwise unsecured.

This saw also has the capability of rip cutting smaller boards, using the machine as a traditional table saw (see **Figure 107**). Smaller, lighter boards are easier to slide across the stationary cast iron table surface to the right of the saw blade.

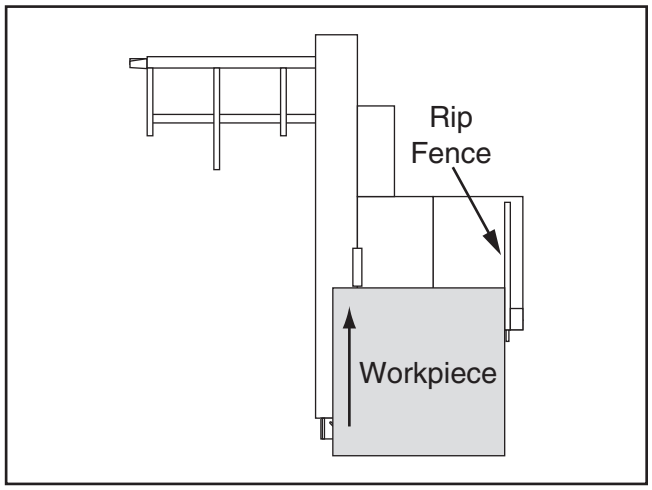

Figure 107. Traditional rip cut with rip fence.

Determine which cutting operation will be best suited for the workpiece to be ripped.

- To use the sliding table, read the instructions titled “Rip Cutting with Sliding Table.”
- To use the machine as a traditional table saw, skip ahead to “Rip Cutting with Rip Fence.”

Rip Cutting with Sliding Table

1. Position crosscut fence on crosscut table, and rotate it until fence touches 0° stop bolt (**Figure 108**).

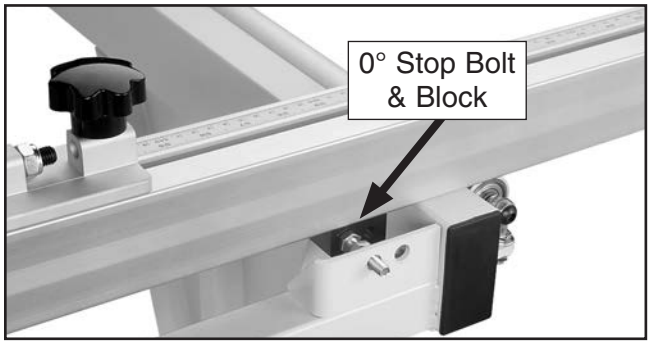

Figure 108. Stop block against 0° stop bolt.

2. Check to make sure fence is at 0°, and if necessary, adjust it as described in **Squaring Crosscut Fence to Blade** on **Page 76**.
3. Adjust distance between crosscut fence and blade (refer to **Page 55** for further details).
4. Set a flip stop to desired width of cut.
5. Position blade guard according to height of workpiece. (Refer to **Understanding Blade Guard** on **Page 45.**)
6. Load workpiece onto table saw. The setup should look similar to **Figure 106** on **Page 56**.
7. Take all necessary safety precautions, then perform cutting operation.

Rip Cutting with Rip Fence

1. Move crosscut table and fence to front of sliding table, and lock them in place with crosscut table lock lever (see **Figure 109**).

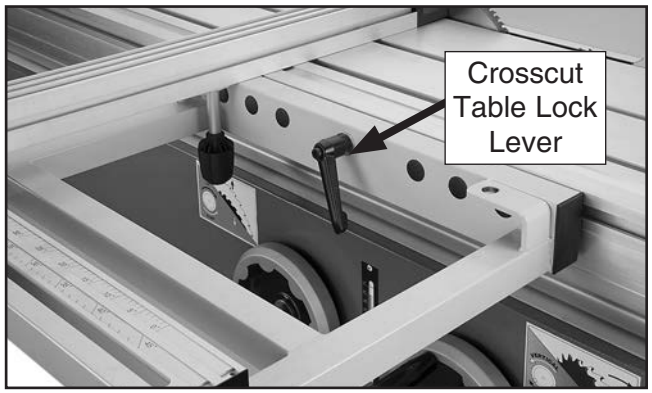

Figure 109. Location of crosscut table lock lever.

2. Lock sliding table in place with table lock lever (see **Figure 110**).

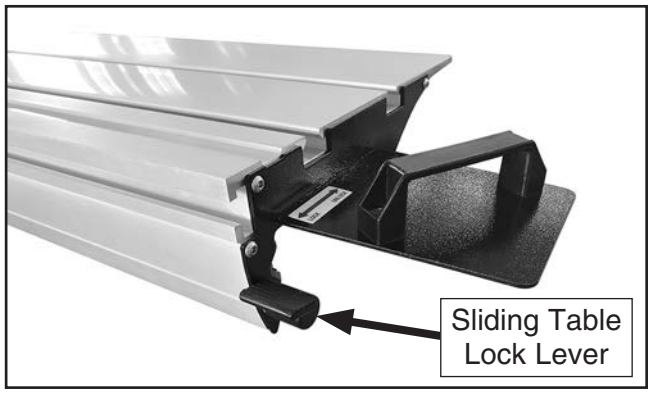

Figure 110. Location of sliding table lock lever.

3. Loosen slide lock lever shown in **Figure 111**.

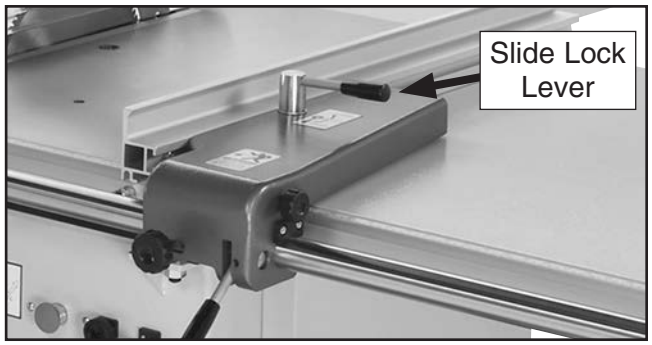

Figure 111. Location of slide lock lever.

4. Place fence in vertical position (see **Figure 112**) for thicker workpieces, or in horizontal position for thinner workpieces and for angled cuts where blade is tilted over the fence.

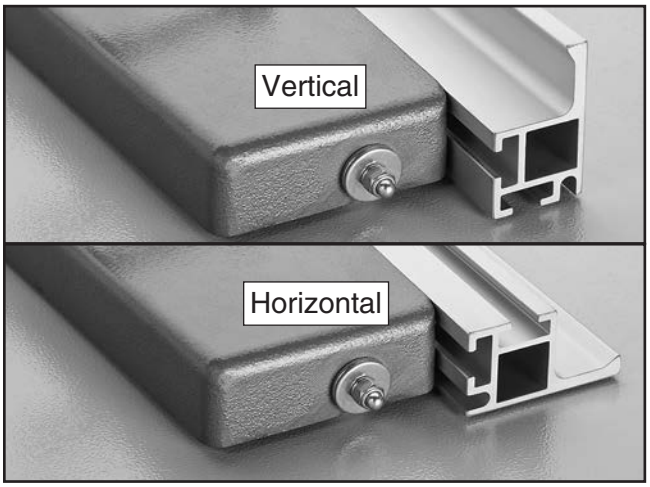

Figure 112. Rip fence positions.

5. Position leading edge of rip fence so it extends across extension wing, as shown in **Figure 113**, then retighten lock lever.

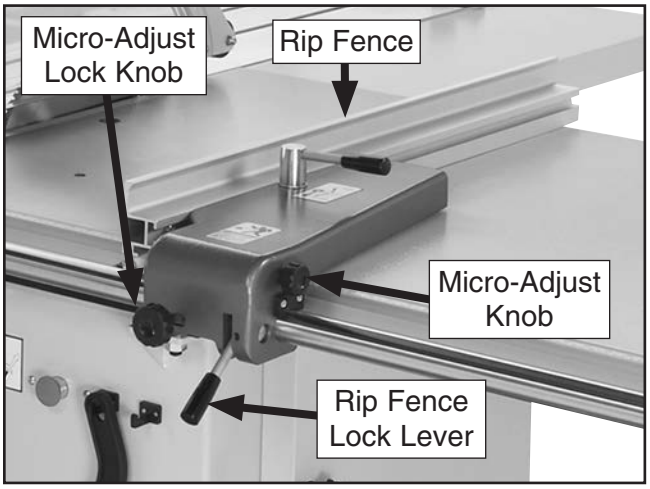

Figure 113. Proper position of rip fence.

6. Lift rip fence lock lever (see **Figure 113**) and adjust fence to approximate width of cut.

7. Tighten micro-adjust lock knob (see **Figure 113**), then turn micro-adjust knob to fine tune width of cut.

8. Push rip fence lock lever down to secure fence assembly in position.

9. Load workpiece onto table saw. The setup should look similar to **Figure 107** on **Page 57**.

10. Take all necessary safety precautions, then perform cutting operation.

Crosscutting

The Model G0764Z can crosscut full-size panels with the fence in the front or rear position, although it is easier to load full-size panels with the crosscut fence mounted in the front position (see **Figure 114**).

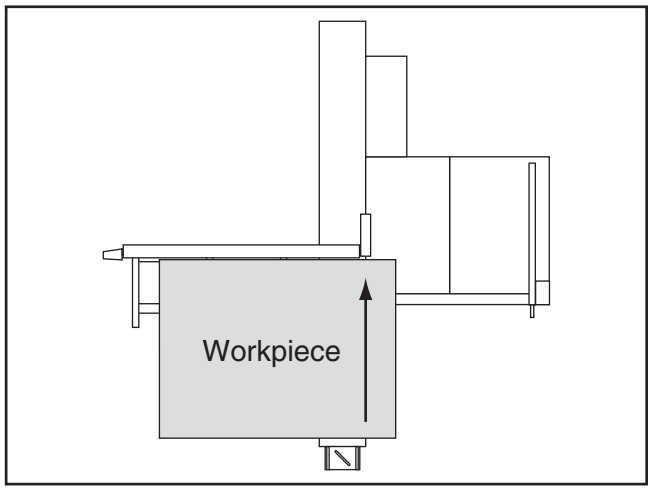

Figure 114. Crosscut with fence mounted in front position.

Mounting the crosscut fence in the rear position (**Figure 115**) gives greater stability for crosscutting smaller panels.

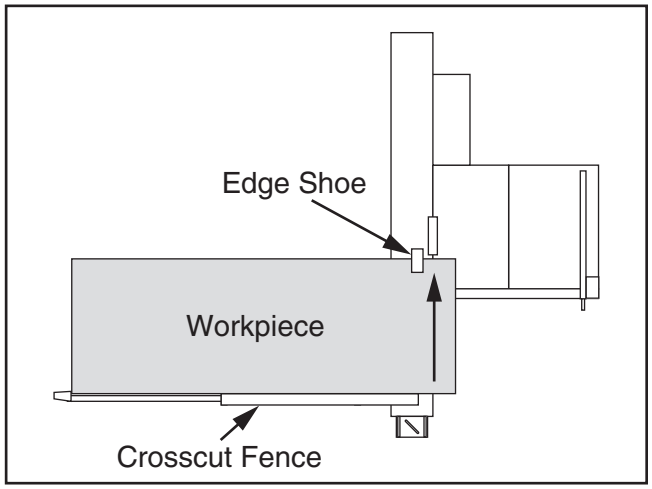

Figure 115. Crosscut with fence mounted in rear position.

The edge shoe (see **Figure 115**) is used to stabilize the front end of the workpiece when otherwise unsecured.

When set up properly, the crosscut fence can support workpieces while using the rip fence as a cut-off gauge, as shown in **Figure 116**.

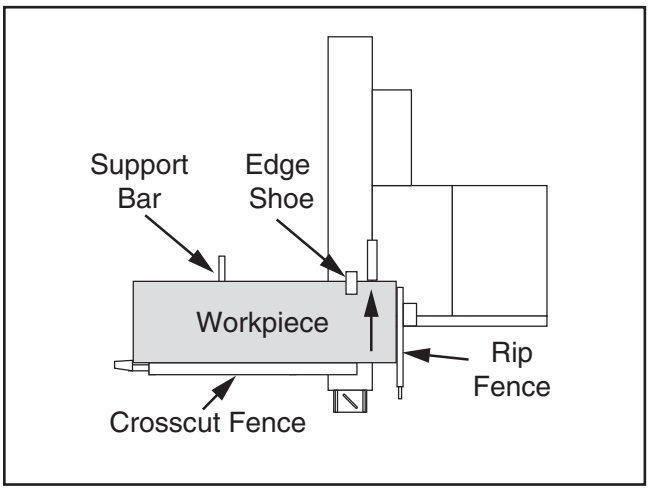

Figure 116. Crosscutting using the rip fence as a cut-off gauge.

Determine which cutting operation will be best suited for the workpiece to be crosscut.

—If you will be crosscutting full-size panels, then skip ahead to **Crosscutting Full-Size Panels**.

—If you will be crosscutting smaller panels, then skip ahead to **Crosscutting Smaller Panels**.

—If you will be crosscutting workpieces using the rip fence as a cut-off gauge, then skip ahead to **Crosscutting Using Rip Fence as Cut-Off Gauge**.

To understand how to move the crosscut table, read **Positioning Crosscut Table Along Sliding Table** on **Page 56**.

Crosscutting Full-Size Panels

1. Install crosscut fence in front mounting location shown in **Figure 117**.

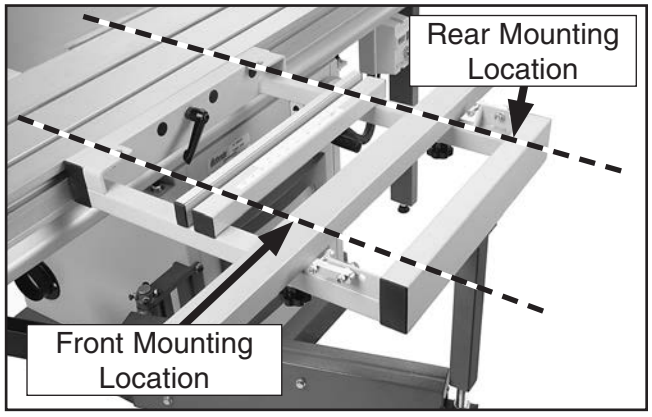

Figure 117. Crosscut fence mounting locations.

2. Check to make sure fence is at 0°, and if necessary, adjust it as described in **Squaring Crosscut Fence to Blade** on **Page 76**.

3. Adjust distance between crosscut fence and blade (refer to **Page 55** for further details).

4. Set either flip stop to the desired width of cut.

   Note: *Extend the crosscut fence slide if the workpiece is more than 73".*

5. Load workpiece onto table saw in forward mounting location shown in **Figure 114**.

6. Take all necessary safety precautions, then perform cutting operation.

Crosscutting Smaller Panels

1. Install crosscut fence in rear mounting location shown in **Figure 114** and lock it in place.

2. Perform **Steps 2 & 3** in **Crosscutting Full-Size Panels.**

3. Set either flip stop to the desired width of cut.

   Note: *Extend the crosscut fence slide if the workpiece is more than 73".*

4. Load workpiece onto table saw in rear mounting location, shown in **Figure 117**. If necessary, use edge shoe to secure workpiece to sliding table.

5. Take all necessary safety precautions, then perform cutting operation.

Crosscutting Using Rip Fence as Cut-Off Gauge

1. Install crosscut fence in rear position of crosscut table, as illustrated in **Figure 116** on **Page 59**.

2. Perform **Steps 2 & 3** in **Crosscutting Full-Size Panels.**

3. Set rip fence to desired width of cut.

4. Slide leading end of rip fence behind front edge of blade (see **Figure 118** for an example).

   Important: *This step is critical to reducing the risk of blade binding and kickback.*

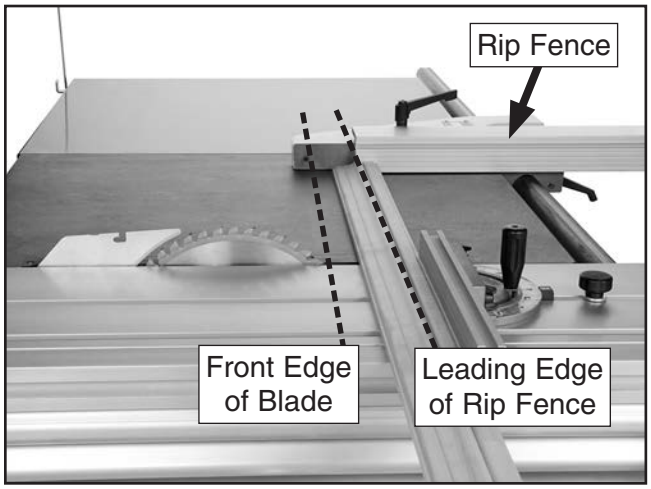

Figure 118. Example photo of correct rip fence position when using it as a cut-off gauge (blade guard removed for clarity).

5. Load workpiece onto table saw and against rip fence. The setup should look similar to **Figure 118**.

6. Take all necessary safety precautions, then perform cutting operation.

Miter Cutting

The crosscut fence can be positioned for miter cuts from 0° to 45° (see **Figure 119**) using the front or rear crosscut table holes. The angle scale on top of the crosscut table has a resolution of 1°.

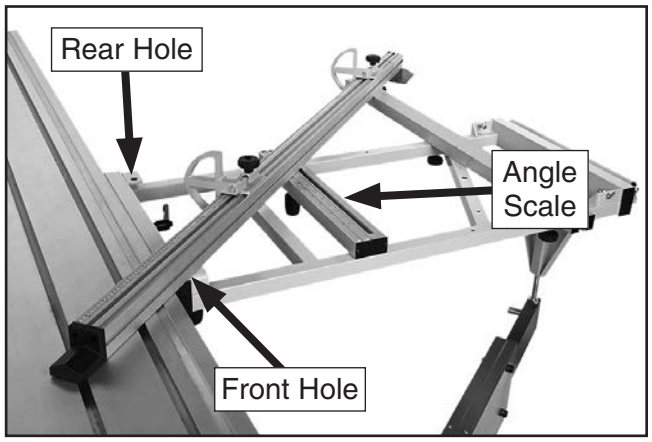

Figure 119. Crosscut fence positioned for miter cut.

To perform a miter cut:

1. DISCONNECT MACHINE FROM POWER!

2. Position crosscut table to provide the greatest amount of workpiece support, then lock it in place.

3. Install fence pivot bolt into front or rear holes shown in **Figure 119** to position table for desired angle of cut (see **Figures 120–121**).

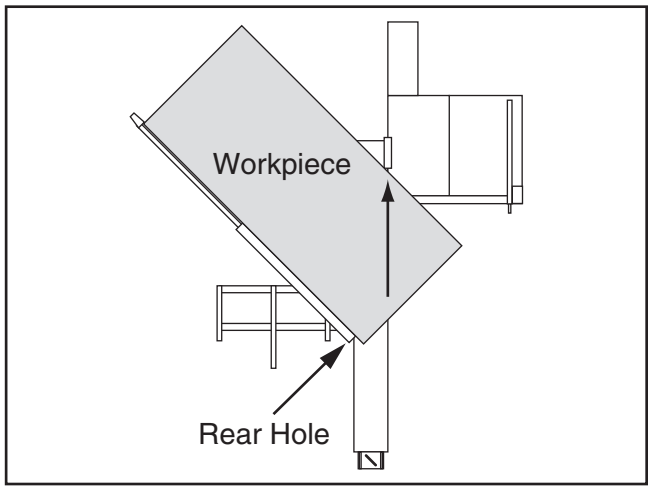

Figure 120. Crosscut fence mounted in rear hole for miter cuts from 0° to 45°.

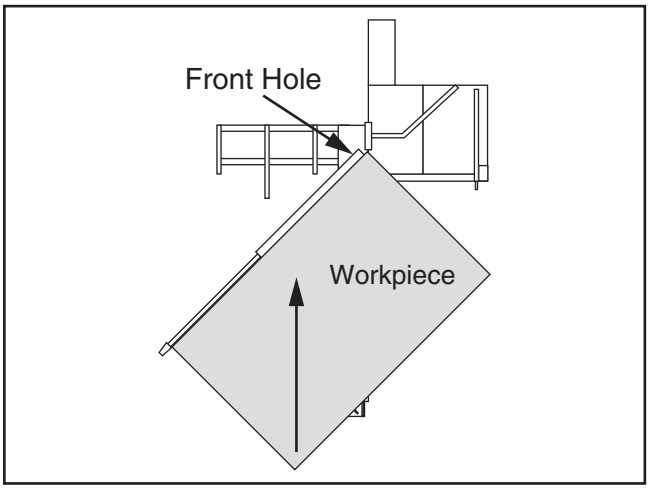

Figure 121. Crosscut fence mounted in front hole for miter cuts from 0° to 45°.

4. Install knob bolts shown in **Figure 122**.

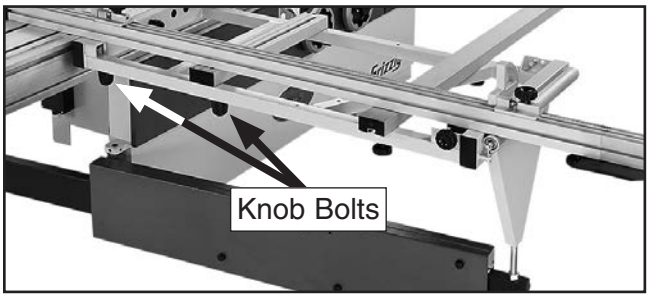

Figure 122. Locations of knob bolts.

5. Pivot crosscut fence to desired angle, making sure fence end block is clear of blade so it will not be cut during operation.

6. Tighten both knob bolts to secure setting.

⚠WARNING

If the crosscut fence moves during cutting, kickback could occur and cause serious personal injury. Always make sure crosscut fence is properly secured before using it.

7. Set flip stop according to length of workpiece you want to cut off to left of blade.

8. Load workpiece onto crosscut table. The setup should look similar to **Figures 120–121**.

9. Take all necessary safety precautions, connect saw to power, then perform cutting operation.

Dado Cutting

Commonly used in furniture joinery, a dado is a straight channel cut in the face of the workpiece.

Typically, dadoes can be cut using either a dedicated dado blade or a standard saw blade. However, since the Model G0764Z cannot accept dado blades, a standard blade must be used.

To use standard saw blade to cut a dado:

1. DISCONNECT MACHINE FROM POWER!

2. Mark width of dado cut on workpiece. Include marks on edge of workpiece so cut path can be aligned when workpiece is lying on table.

3. Raise blade to desired depth of dado channel.

4. Align workpiece with blade to cut one of dado sides, as shown in **Figure 123**, then align rip fence with workpiece.

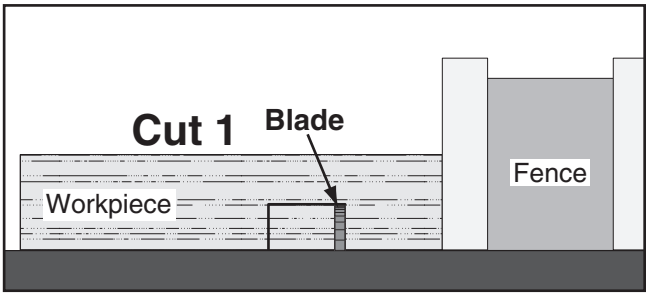

Figure 123. First cut for a single-blade dado.

5. Reconnect saw to power and turn saw ***ON***.

6. Allow blade to reach full speed, then perform the cutting operation.

7. Repeat cutting operation on other side of dado channel, as shown in **Figure 124.**

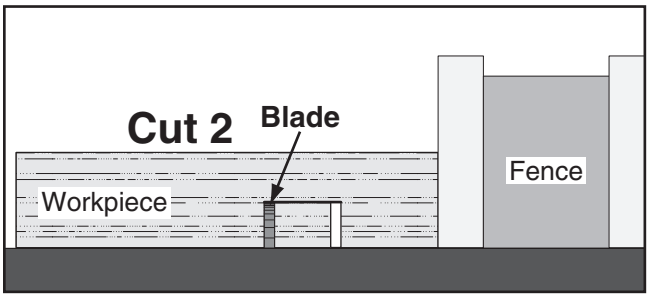

Figure 124. Second cut for a single-blade dado.

8. Make additional cuts (see **Figure 125**) in center of dado to clear out necessary material. Dado is complete when channel is completely cleared out.

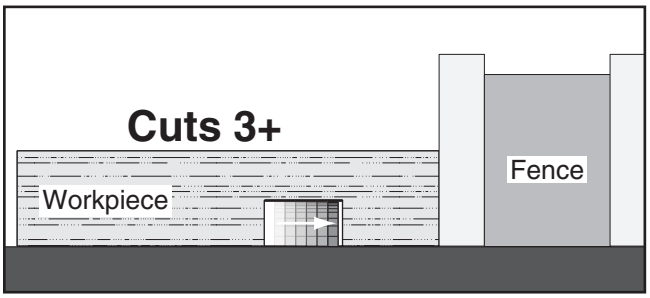

Figure 125. Additional single-blade dado cuts.

⚠WARNING

Adjust rip fence to properly support workpiece for each of the dado cuts. This will reduce likelihood of kickback and injury.

Rabbet Cutting

Commonly used in furniture joinery, a rabbet is an L-shaped groove cut in the edge of the workpiece.

Typically, rabbets can be cut with either a dado blade or a standard saw blade. However, because the Model G0764Z cannot accept dado blades, rabbets must be cut with a standard saw blade only.

A ripping blade is typically the best blade to use for cutting rabbets when using a standard blade because it removes sawdust very efficiently. (See **Page 47** for blade details.) Also, a sacrificial fence is not required when cutting rabbets with a standard blade.

To cut rabbets with standard blade:

1. DISCONNECT MACHINE FROM POWER!

2. Mark width of rabbet cut on workpiece. Include marks on edge of workpiece so cut path can be aligned when workpiece is lying on table.

3. If workpiece is too tall to safely use blade guard, position blade guard up and away from main blade.

⚠CAUTION

Always use push sticks, featherboards, push paddles, and other safety accessories whenever possible to increase safety and control during operations which require removal of blade guard. ALWAYS replace blade guard after operation is complete.

4. Raise blade to desired depth of rabbet channel desired.

5. Stand workpiece on edge, as shown in **Figure 126,** then adjust rip fence so blade is aligned with inside of rabbet channel.

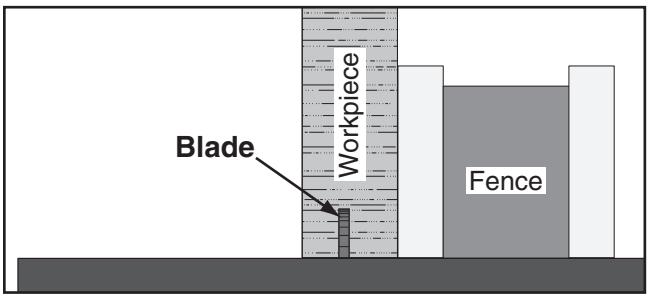

Figure 126. First rabbet cut.

⚠WARNING

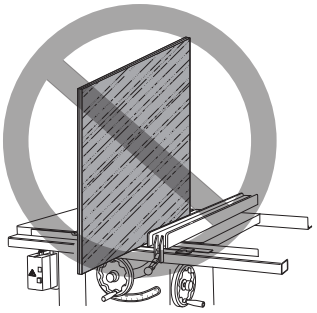

DO NOT place a tall board on edge when cutting a rabbet. Overly tall workpieces cannot be properly supported with the fence and can easily shift during operation, causing kickback or loss of control. Instead, use another tool to cut these types of rabbets.

6. Reconnect saw to power source, then perform cut.

7. Lay workpiece flat on table, as shown in **Figure 127**, adjust saw blade height to intersect with first cut, then perform second cut to complete rabbet.

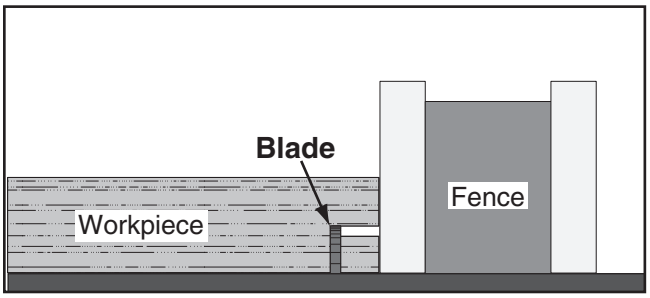

Figure 127. Second cut to create a rabbet.

Narrow-Rip Auxiliary Fence & Push Block

There are designs for hundreds of specialty jigs that can be found in books, trade magazines, and the internet. These types of jigs can greatly improve the safety and consistency of cuts. They are particularly useful during production runs when dozens or hundreds of the same type of cut need to be made.

The narrow-rip auxiliary fence and push block system shown in this section is an example of a specialty jig that can be made to increase the safety of very narrow rip cuts.

Making a Narrow-Rip Push Block for an Auxiliary Fence

1. Cut a piece of ½" thick plywood 5¼" wide and as long as your table saw rip fence; cut a piece of ¾" thick hardwood 3" wide and as long as your table saw rip fence (see **Figure 128**).

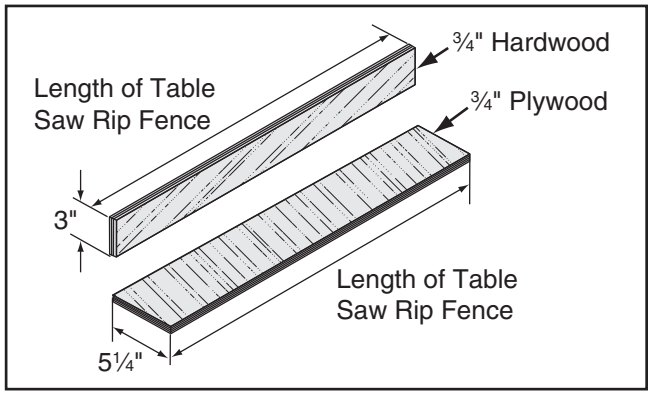

Figure 128. Auxiliary fence dimensions.

Note: *We recommend cutting hardwood board oversize, then jointing and planing it to the correct size to make sure the board is square and flat. Only use furniture grade plywood or kiln dried hardwood to prevent warping.*

2. Pre-drill and countersink eight pilot holes ⅜" in from edge of 5¼" wide board, then secure boards together with eight #6 x 1½" wood screws, as shown in **Figure 129**.

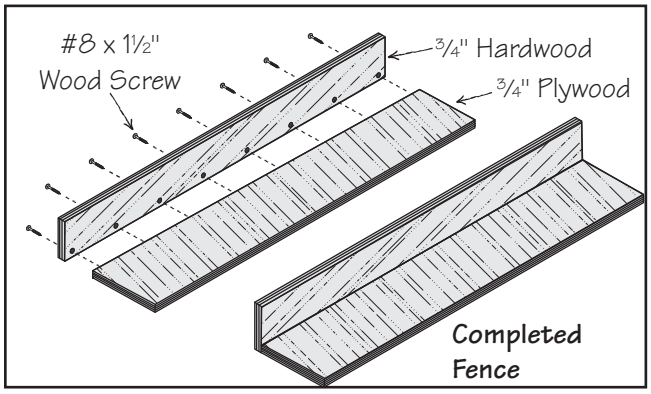

Figure 129. Location of pilot holes.

3. Using ½" material you used in previous steps, cut out pieces for push block per the dimensions shown in **Figure 130**; for handle, cut a piece 10" long by 5"–9" high and shape it as desired to fit your hand.

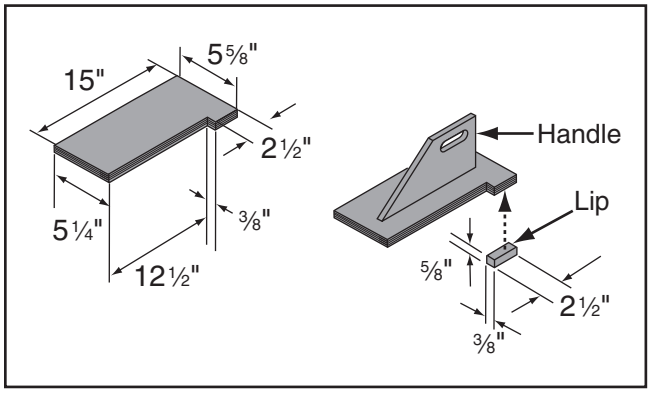

Figure 130. Push block dimensions and construction.

4. Attach handle to base with #8 x 1½" wood screws, and attach lip to base with cyanoacrylate type wood glue.

Using the Auxiliary Fence and Push Block

1. Place auxiliary fence on table and clamp it to rip fence at both ends, then adjust distance between the auxiliary fence and blade—this determines width of rip cut (see **Figure 131**).

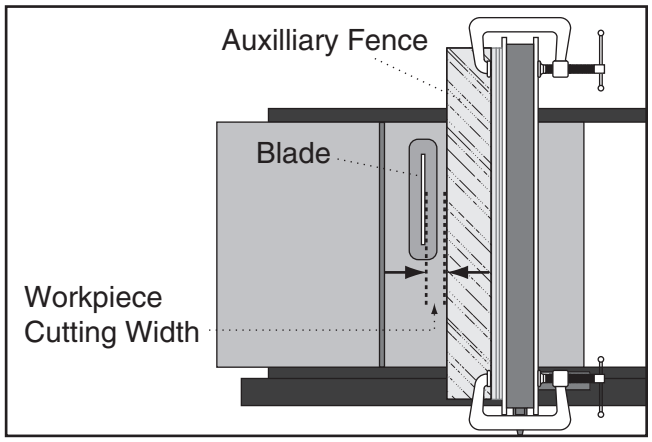

Figure 131. Example illustration of adjusting ripping distance between blade and auxiliary fence.

⚠WARNING

Whenever possible, keep blade guard in the proper position over blade when using jigs of this nature. This will reduce risk of injury from kickback or contact with blade.

2. Install blade guard.

3. Place workpiece 1" behind blade and evenly against table and auxiliary fence.

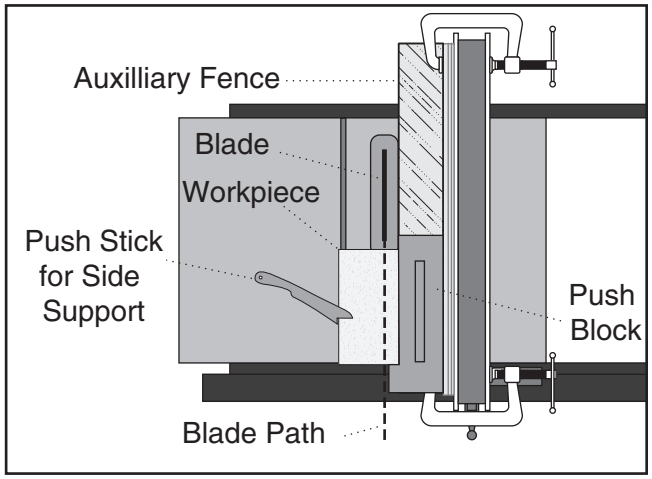

Figure 132. Example illustration of push block in position to push workpiece through blade.

4. Turn saw ***ON***, wait for blade to reach full speed, then begin ripping the workpiece using a push stick for side support.

5. As the workpiece nears end of cut, place push block on auxiliary fence with lip directly behind workpiece, then release push stick just before blade.

6. Guide workpiece rest of the way through cut with push block, as shown in **Figure 133**.

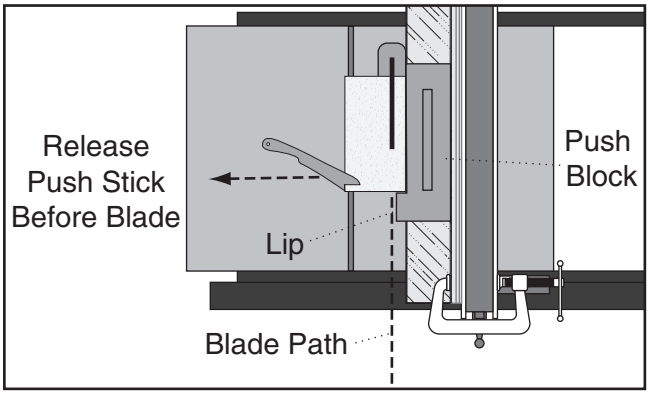

Figure 133. Example illustration of ripping with push block.

⚠WARNING

Turn saw *OFF* and wait for blade to completely stop before removing cut off piece. This will reduce risk of injury from kickback or contact with blade.

SECTION 5: ACCESSORIES

⚠WARNING

Installing unapproved accessories may cause machine to malfunction, resulting in serious personal injury or machine damage. To reduce this risk, only install accessories recommended for this machine by Grizzly.

NOTICE

Refer to our website or latest catalog for additional recommended accessories.

T23037—Scoring Blade Replacement



Figure 134. Model T23037 Scoring Blade

T32567—14" Carbide-Tipped Combination Blade, 70T

This combination blade combines one flat tooth for ripping, followed by four alternate top bevel teeth for crosscutting, and a large gullet for effective chip clearance. This blade also features laser cut anti-vibration slots, practically eliminating the vibration that resonates in standard blades.



Figure 135. T32567 14" Combination Blade.

G0777—1.5 HP Ultra-Quiet Cyclone Dust Collector

Where most dust collectors this size operate at a minimum of 80-82 dB, the G0777 can collect even the biggest shavings without exceeding 70–72 dB due to its slow-speed motor and large impeller. Features a compact profile on a sturdy mobile frame, a pleated filter system, an internal filter-cleaning brush system, 880 CFM airflow, a built-in remote control switch, and a mobile 35-gallon collection drum.



Figure 136. G0777 Ultra-Quiet Cyclone Dust Collector.

order online at www.grizzly.com or call 1-800-523-4777

T20501—Face Shield Crown Protector 4"
T20502—Face Shield Crown Protector 7"
T20503—Face Shield Window
T20451—"Kirova" Clear Safety Glasses



Figure 137. Eye protection assortment.

W1732—Adjustable Roller Table
Specifications:
- Roller size: 19½" long x 2" dia., 9 each
- Minimum stand length: 19½"
- Maximum stand length: 54"
- Minimum stand height: 24½"
- Maximum stand height: 38"
- Casters: Polyurethane, 4¼" dia., locking
- Legs: Independently adjustable

Multiple stands can be connected for unlimited rolling capacity

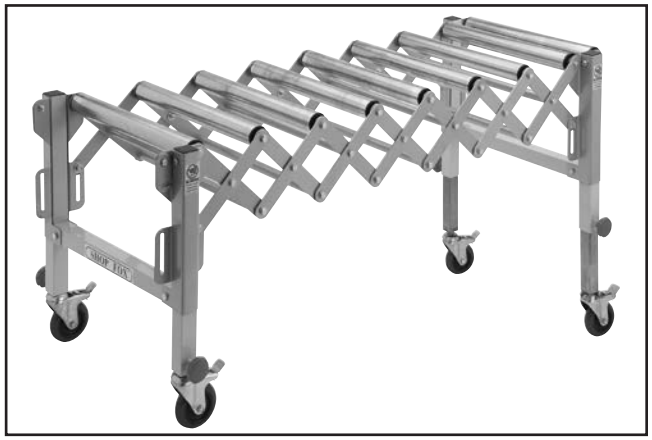

Figure 138. W1732 Adjustable Roller Table.

D4218—Black Flexible Hose 5" x 10'
D4212—Black Flexible Hose 2½" x 10'
W1318—Wire Hose Clamp 5"
W1314—Wire Hose Clamp 2½"
W1008—Plastic Blast Gate 5"
We've hand picked a selection of commonly used dust collection components for the Model G0764Z.

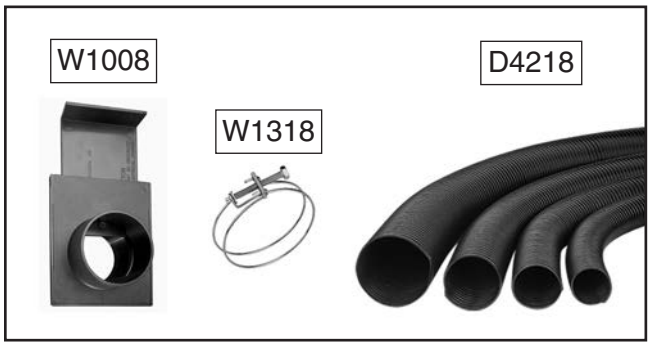

Figure 139. Recommended dust collection accessories.

H8029—5-Piece Safety Kit
This kit has four essential jigs. Includes two push blocks, push stick, featherboard, and combination saw and router gauge. Featherboard fits ⅜" x ¾" miter slots. Made of high-visibility yellow plastic.

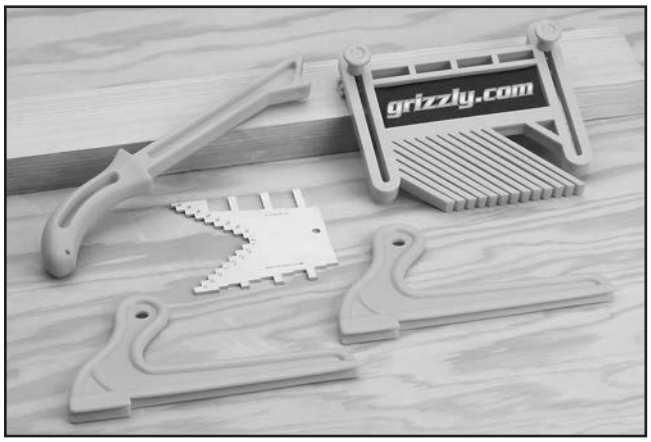

Figure 140. H8029 5-Piece Safety Kit.

SECTION 6: MAINTENANCE

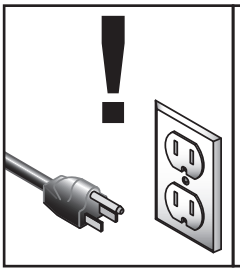

⚠WARNING

To reduce risk of shock or accidental startup, always disconnect machine from power before adjustments, maintenance, or service.

Schedule

For optimum performance from your machine, follow this maintenance schedule and refer to any specific instructions given in this section.

Daily Check:
- Loose mounting bolts.
- Damaged saw blade.
- Worn or damaged wires.
- Any other unsafe condition.

Weekly Maintenance:
- Clean sliding table surface and grooves.
- Clean and protect cast iron table.
- Clean rip fence and slide ways.

Monthly Maintenance:
- Clean/vacuum dust buildup from inside cabinet and off motors.
- Check/replace belts for proper tension, damage or wear (**Page 72**).

Every 6–12 Months:
- Lubricate slide shafts (**Page 69**).
- Lubricate elevation chain (**Page 69**).
- Lubricate tilt leadscrew (**Page 69**).

Cleaning & Protecting

Cleaning the saw is relatively easy. Vacuum excess wood chips and sawdust, and wipe off the remaining dust with a dry cloth. If any resin has built up, use a resin-dissolving cleaner to remove it.

Protect the unpainted cast iron table by wiping it clean after every use—this ensures moisture from wood dust does not remain on the bare metal surface. Keep the table rust-free with regular applications of products like G96® Gun Treatment, SLIPIT®, or Boeshield® T-9 (see **Page 66** for more details).

G5562—SLIPIT® 1 Qt. Gel
G5563—SLIPIT® 12 Oz. Spray
G2871—Boeshield® T-9 12 Oz. Spray
G2870—Boeshield® T-9 4 Oz. Spray
H3788—G96® Gun Treatment 12 Oz. Spray
H3789—G96® Gun Treatment 4.5 Oz. Spray



Figure 141. Recommended products for protecting unpainted cast iron/steel part on machinery.

Lubrication

An essential part of lubrication is cleaning the components before lubricating them. This step is critical because dust and chips build up on lubricated components, which makes them hard to move. Simply adding more lubrication to built-up grime will not result in smooth-moving parts. Clean the components in this section with an oil/grease solvent cleaner or mineral spirits before applying lubrication.

All bearings are sealed and permanently lubricated. Leave them alone until they need to be replaced. Refer to **Page 66** for NLGI#2 grease (T23964) available from Grizzly.

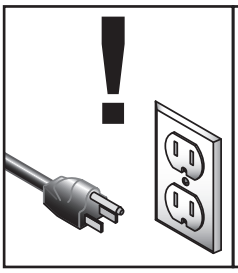

⚠WARNING

To reduce risk of shock or accidental startup, always disconnect machine from power before adjustments, maintenance, or service.

Slide Shafts

Lubrication Type ...T23964 or NLGI#2 Equivalent
Amount ..... 1–2 Pumps
Lubrication Frequency .....6–12 Months

The blades and motors move up and down on slide shafts that require adding lubricant to the grease fittings shown in **Figures 142–144**.

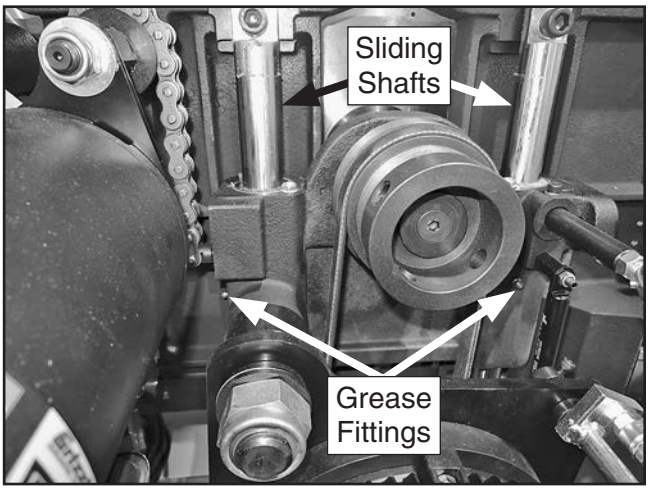

Figure 142. Sliding shafts and grease fittings.

Elevation Chain

Lubrication Type ..... G4682 Dry Coating Lube
Amount .....Thin Coat
Lubrication Frequency .....6–12 Months

Clean the chain links (see **Figure 143)** with a brush and mineral spirits, then apply a light coat of lubricant.

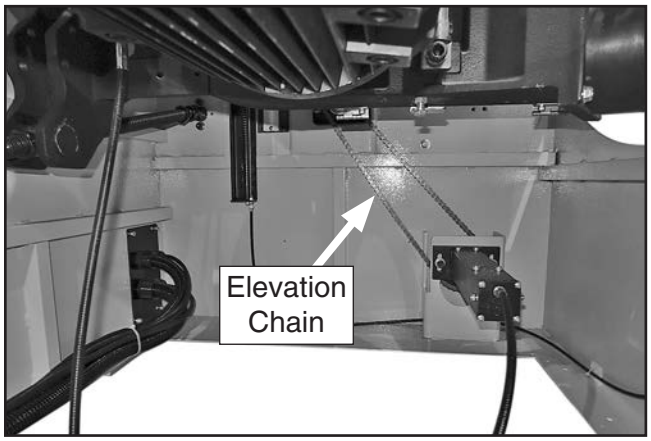

Figure 143. Location of elevation chain.

Tilt Leadscrew

Lubrication Type ...T23964 or NLGI#2 Equivalent
Amount .....Thin Coat
Lubrication Frequency .....6–12 Months

Clean the threads of the tilt leadscrew (see **Figure 144**) with a stiff brush and mineral spirits. When dry, apply a thin coat of lubricant into the threads with a brush and tilt the blade back and forth a few times to distribute the grease.

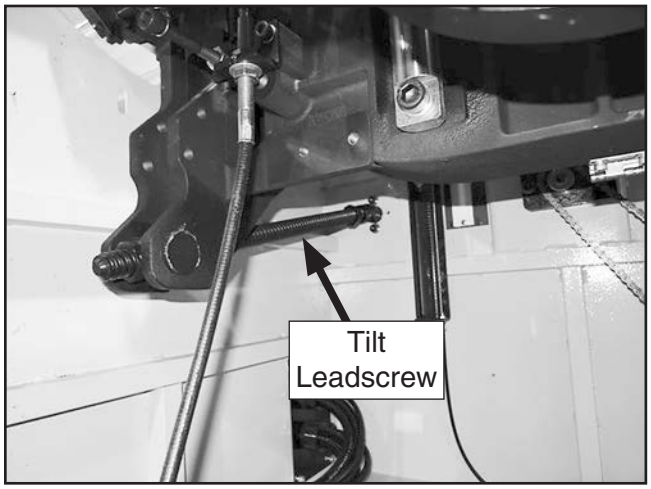

Figure 144. Tilt leadscrew.

SECTION 7: SERVICE

Review the troubleshooting procedures in this section if a problem develops with your machine. If you need replacement parts or additional help with a procedure, call our Technical Support. **Note:** *Please gather the serial number and manufacture date of your machine before calling.*

Troubleshooting

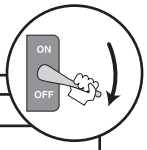

Symptom	Possible Cause	Possible Solution
Machine does not start or a breaker trips.	1. Emergency Stop button is engaged/faulty. 2. Master power switch turned ***OFF*** or is at fault. 3. Power supply switched ***OFF*** or is at fault. 4. Blade guard limit switch engaged/at fault. 5. Cabinet door is open/door safety switch is at fault. 6. Motor connection wired incorrectly. 7. Thermal overload relay has tripped. 8. Wall fuse/circuit breaker is blown/tripped. 9. Contactor not getting energized/has burnt contacts. 10. Wiring is open/has high resistance. 11. Motor ON button is at fault. 12. Set incorrectly or fault. 13. Motor is at fault.	1. Rotate clockwise slightly until it pops out/replace it. 2. Turn master power switch ***ON***; replace. 3. Ensure power supply switch is on; ensure power supply has correct voltage. 4. Move blade guard to working position; replace faulty limit switch. 5. Close door/replace faulty safety switch. 6. Correct motor wiring connections. 7. Turn cut-out dial to increase working amps and push reset pin. Replace if tripped multiple times (weak relay). 8. Ensure circuit size is suitable for this machine; replace weak breaker. 9. Test for power on all legs and contactor operation. Replace unit if faulty. 10. Check for broken wires or disconnected/corroded connections, and repair/replace as necessary. 11. Replace faulty ON button. 12. Adjust to correct delay; replace module. 13. Test/repair/replace.
Machine stalls or is underpowered.	1. Feed rate/cutting speed too fast for task. 2. Workpiece material is not suitable for this machine. 3. Worn or damaged belts. 4. Motor connection is wired incorrectly. 5. Motor bearings are at fault. 6. Start timer module is at fault. 7. Motor is at fault.	1. Decrease feed rate/cutting speed. 2. Only cut wood products; make sure moisture content is below 20% and there are no foreign materials in the workpiece. 3. Replace bad belts (**Page 72**). 4. Correct motor wiring connections. 5. Test by rotating shaft; rotational grinding/loose shaft requires bearing replacement. 6. Adjust to correct delay; replace module. 7. Test/repair/replace.

Symptom	Possible Cause	Possible Solution
Machine has vibration or noisy operation.	1. Motor or component is loose. 2. Blade is at fault. 3. Worn or damaged belts. 4. Pulley is loose. 5. Motor mount loose/broken. 6. Machine is incorrectly mounted or sits unevenly. 7. Arbor pulley is loose. 8. Motor fan is rubbing on fan cover. 9. Arbor bearings are at fault. 10. Motor bearings are at fault.	1. Inspect/replace stripped or damaged bolts/nuts, and retighten with thread locking fluid. 2. Replace warped, bent, or twisted blade; resharpen dull blade. 3. Replace bad belts (**Page 72**). 4. Re-align/replace shaft, pulley, set screw, and key as required. 5. Tighten/replace. 6. Tighten/replace anchor studs in floor; relocate/shim machine. 7. Retighten/replace arbor pulley with shaft and thread locking liquid. 8. Replace dented fan cover; replace loose/damaged fan. 9. Replace arbor housing bearings; replace arbor. 10. Test by rotating shaft; rotational grinding/loose shaft requires bearing replacement.
Blades rotate in the opposite direction as they should.	1. Two of the power wires are reversed.	1. Reverse R & T incoming power connections in junction box (**Page 41**).
Workpiece has burned edges, binds, or kicks back.	1. Sliding table is not parallel to blade. 2. Riving knife is not aligned with blade. 3. Blade is warped.	1. Make sliding table parallel to blade (**Page 75**). 2. Align riving knife with main blade (**Page 46**). 3. Replace blade.
Workpiece has chip out on the bottom edge.	1. Scoring blade height is incorrect. 2. Scoring blade is not aligned with main blade. 3. Scoring blade kerf does not match the main blade.	1. Adjust height of scoring blade (**Page 53**). 2. Align scoring blade (**Page 53**). 3. Adjust scoring blade kerf (**Page 53**).
Sliding table saw does not cut square.	1. Sliding table is not parallel to blade. 2. Crosscut fence is not perpendicular to blade.	1. Make sliding table parallel to blade (**Page 75**). 2. Adjust crosscut fence perpendicular to blade (**Page 76**).
Rip fence hits table top when sliding across table.	1. Rail is too low. 2. Rip fence roller is too low.	1. Raise front rail (**Page 79**). 2. Adjust rip fence roller (**Page 79**).
Blade does not reach 90˚, or blade does not reach 45˚.	1. Blade tilt stop nuts are out of adjustment.	1. Adjust stop nuts (**Page 74**).
The rip fence scale is not accurate.	1. The rip fence scale is out of calibration or was not set up correctly.	1. Adjust the rip fence scale (**Page 79**).
Tilt or blade height handwheels difficult to turn.	1. Lock knob is tight. 2. Leadscrews caked with dust.	1. Release lock knob. 2. Clean off dust and lubricate leadscrews/gears.

Belt Service

Over time, belts will stretch and wear. To maintain efficient power transfer to the blades, make sure the belts are properly tensioned and in good condition. If belts show any glazing, fraying, or cracking, replace them.

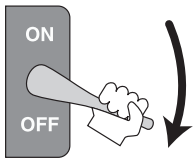

⚠WARNING

To reduce risk of shock or accidental startup, always disconnect machine from power before adjustments, maintenance, or service.

Tensioning Scoring Motor Belt

Proper tension of the scoring motor flat belt is automatically maintained by a spring on the motor pivot rod (see **Figures 145** and **146**).

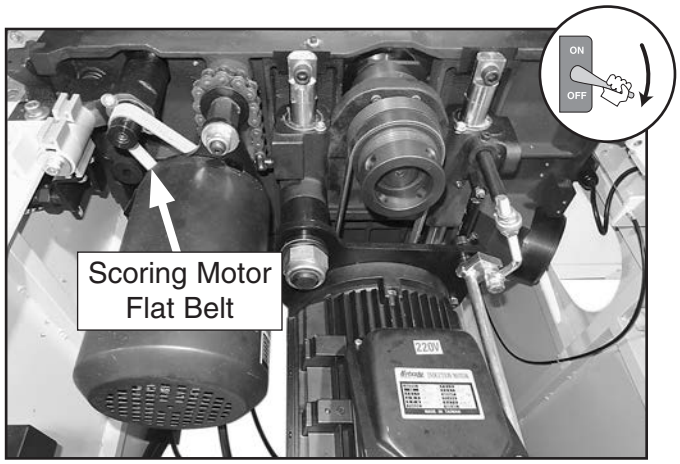

Figure 145. Location of scoring motor flat belt.

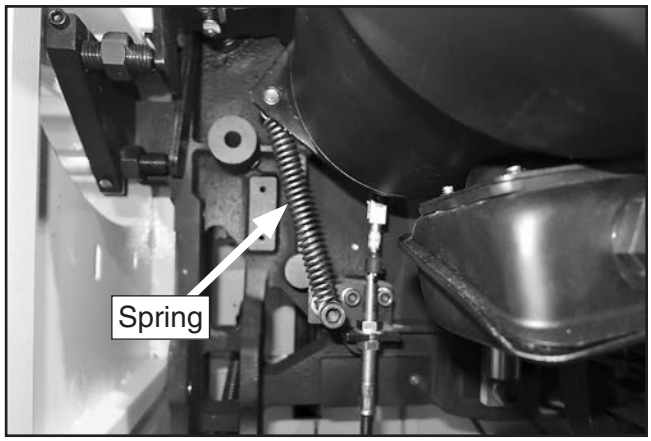

Figure 146. Location of scoring motor spring.

Replacing Scoring Motor Belt

To replace the scoring motor belt, have an assistant lift the scoring motor up to relieve the belt tension, then replace the belt with a new one. When the motor is lowered, proper belt tension will be applied by the spring.

Tensioning Main Motor Belt

Proper tension of the main motor belt is automatically maintained by a cam lock attached to the motor mounting plate and arbor support bracket (see **Figure 147)**.

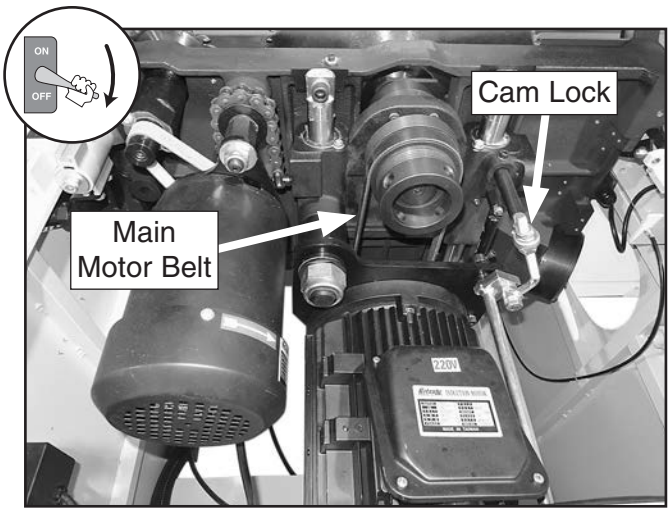

Figure 147. Location of main motor belt and cam-lock (table removed for photo clarity).

Replacing Main Motor Belt

The belt transfers power from the main motor to the main blade.

Tool Needed	Qty
Wrench 22mm	1

To replace main motor belt:

1. DISCONNECT MACHINE FROM POWER!

2. Open cabinet door and locate motor adjustment lever shown in **Figure 148**.

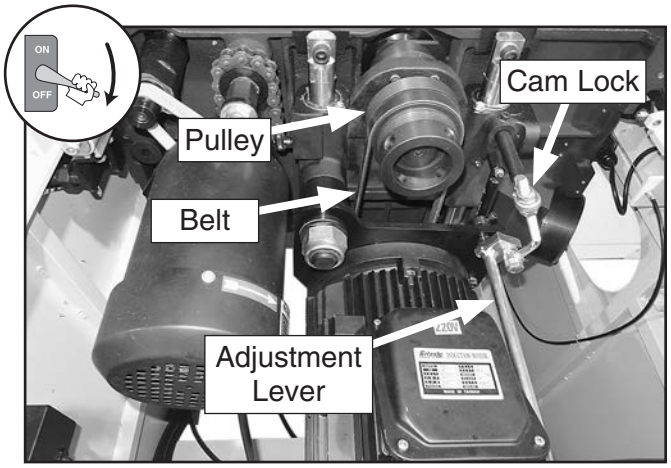

Figure 148. Main motor belt tension controls (table removed for photo clarity).

3. Rotate adjustment lever clockwise to raise motor and release belt tension (see **Figure 149**). The cam will lock the motor in place.

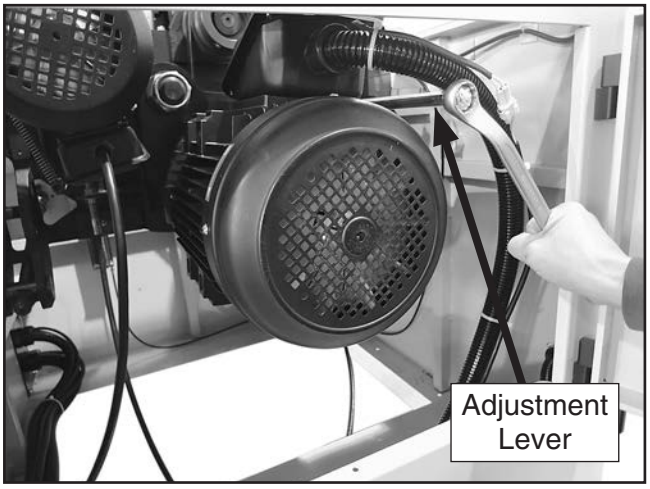

Figure 149. Rotating motor position using motor adjustment lever.

4. Carefully position belt onto desired pulleys (see **Change Speed** on **Page 49** for additional information).

5. Rotate adjustment lever counterclockwise to lower motor and retension belt.

   Note: *The cam lock will automatically position motor for correct belt tension.*

6. Close cabinet door before reconnecting machine to power.

Blade Tilt Calibration

The blade tilt stops are calibrated at the factory, but they can be recalibrated if they change during the life of the machine. The 0° stop positions the blade square to the table.

Tools Needed	Qty
Hex Wrench 3mm	1
Machinist's Square, 90° & 45°	1

0° Stop

1. DISCONNECT MACHINE FROM POWER!

2. Move blade tilt to 0° and raise main blade as high as it will go.

3. Open cabinet door and identify the stop nuts shown in **Figure 150**.

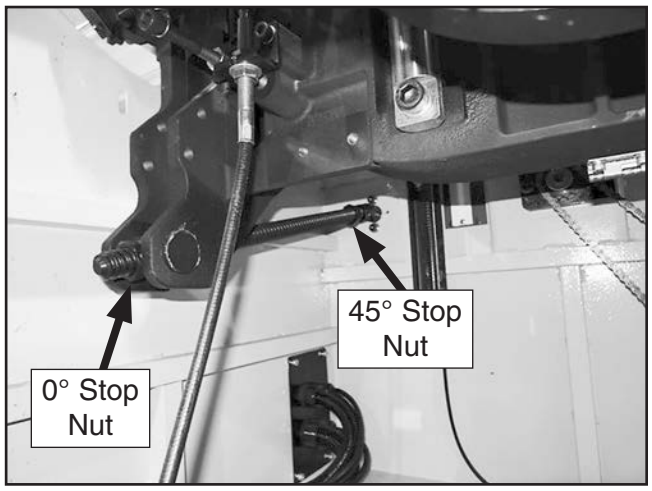

Figure 150. Blade tilt stop nuts.

4. Use machinist's square to check if main blade is square to table (see **Figure 151**).

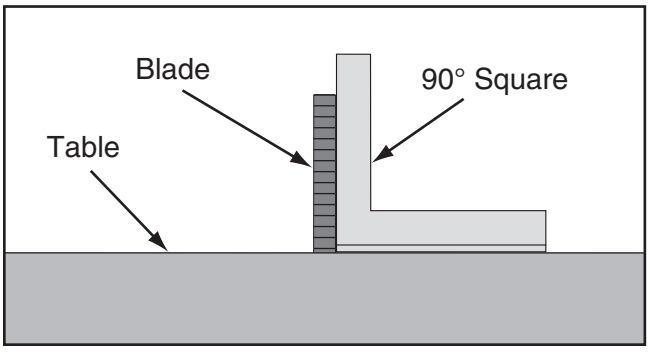

Figure 151. Machinist's square against blade and table.

   a. If main blade is not square to table, loosen the two set screws on 0° stop nut, then loosen stop nut away from leadscrew collar.

   b. Adjust main blade tilt angle so that it is square to table.

   c. Thread 0° stop nut against leadscrew collar and retighten set screws.

45° Stop

Use a similar procedure for the 45° stop nut shown in **Figure 150**, as previously instructed for the 0° stop nut.

Tilt Scale Calibration

If necessary, the blade tilt scale on the front of the saw can be adjusted by using the hex nuts shown on the tilt scale cable in **Figure 152**. These are accessed inside the cabinet.

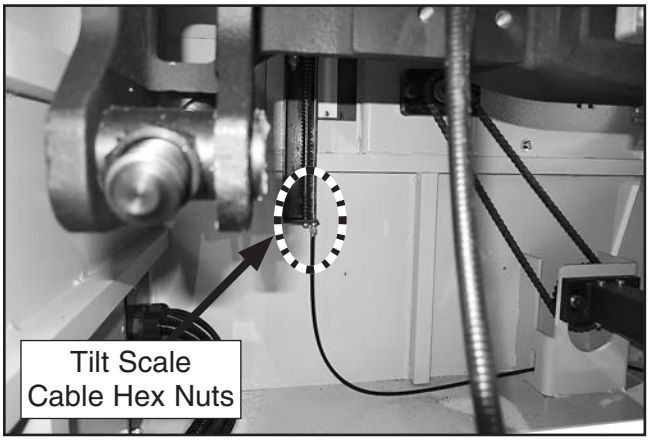

Figure 152. Tilt scale cable hex nuts.

Sliding Table Parallel Adjustment

The sliding table is adjusted parallel with the main blade at the factory, but it can re-adjusted if necessary.

Tools Needed	Qty
Felt Tip Pen	1
90° Square	1
Precise Measuring Tool	1
Phillips Screwdriver #2	1
Wrench or Socket 17mm	1

To adjust sliding table parallel with main blade:

1. DISCONNECT MACHINE FROM POWER!

2. Raise main blade as high as it will go and adjust tilt angle to 0° (verify with square).

3. Mark one blade tooth with felt tip pen. This will be your reference point when taking measurements in following steps.

4. Move sliding table all the way forward, and measure distance “A” shown in **Figure 153**, which is between marked blade tooth and edge of sliding table miter slot.

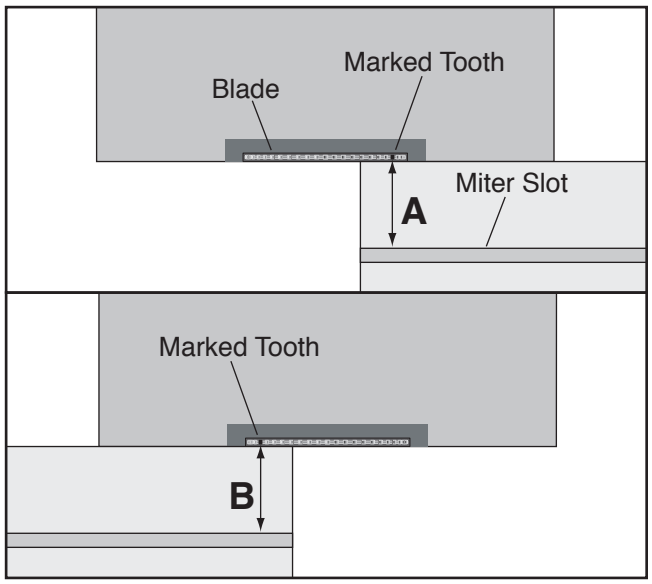

Figure 153. Measuring distance between miter slot and blade at each end of sliding table.

5. Rotate blade 180°, move sliding table all the way back, then measure distance “B” shown in **Figure 153**.

   —If “A” and “B” measurements are same or difference is 0.004" or less, no adjustments to table parallelism need be made.

   —If difference is greater than 0.004", then sliding table parallelism must be adjusted. Proceed to **Step 6**.

6. Loosen hex nuts on sliding table T-bolts to allow sliding table to move in next step (refer to **Figures 20–22** on **Page 26** for hex nut locations).

7. Adjust adjustment bolts underneath each end of sliding table (see **Figure 154**) to make sliding table parallel with main blade.

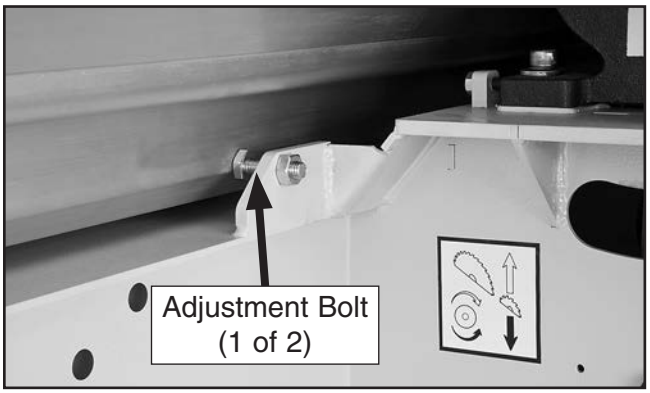

Figure 154. Sliding table parallelism adjustment bolt (1 of 2).

8. Once sliding table parallelism is within 0.004" from one end to the other, retighten hex nuts and re-install access panels.

Sliding Table Movement Adjustment

The sliding table features an adjustment bar with bolts that control how easily the sliding table moves across the base (see **Figure 155**). These adjustment bolts are factory set and should not be adjusted unless absolutely necessary. They can only be accessed by removing the end covers from both ends of the sliding table base and sliding the thin plate that is over the bolts out of the way.

Important: Before making any adjustments to the factory setting, make sure it is necessary. This is a major adjustment that, if not done properly, can adversely affect the movement of the sliding table saw.

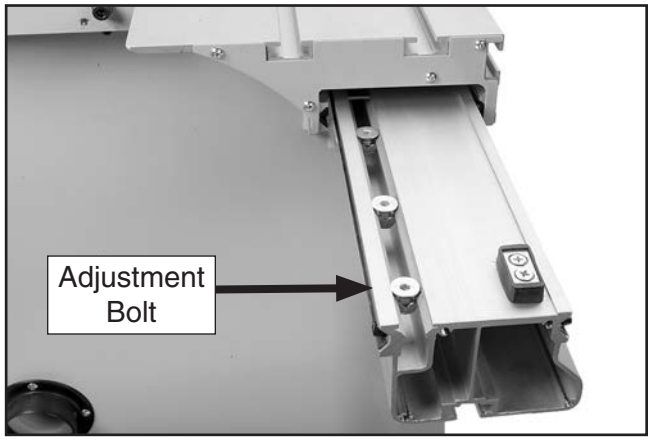

Figure 155. Adjustment bolt access location.

Increasing pressure between the rails (turning bolts counterclockwise) reduces table movement inaccuracies, which increases accuracy, but makes it harder to slide the table. Decreasing pressure between the rails (turning bolts clockwise) makes it easier to slide the table, but increases table movement inaccuracies, which reduces accuracy.

Adjusting this part of the sliding table correctly is a matter of trial-and-error by making adjustments, moving the sliding table, making additional adjustments, and repeating the process until the sliding table moves smoothly and easily but without any inaccuracies.

Squaring Crosscut Fence to Blade

Squaring the crosscut fence to the blade ensures that cuts made with the crosscut fence will be square. This procedure can be done by using a 32" x 32" piece of scrap plywood as a test piece and making five test cuts, then adjusting the fence as necessary.

Note: *Getting accurate results with this procedure is a matter of trial-and-error and patience.*

To square crosscut fence with the blade:

1. Make sure sliding table is parallel with main blade (refer to **Sliding Table Parallel Adjustment** on **Page 75** for detailed instructions).

2. Loosen crosscut fence pivot lock knob to allow fence to pivot.

3. Move crosscut fence stop block against 0° stop bolt (see **Figure 156**), then retighten pivot lock knob to secure fence in place.

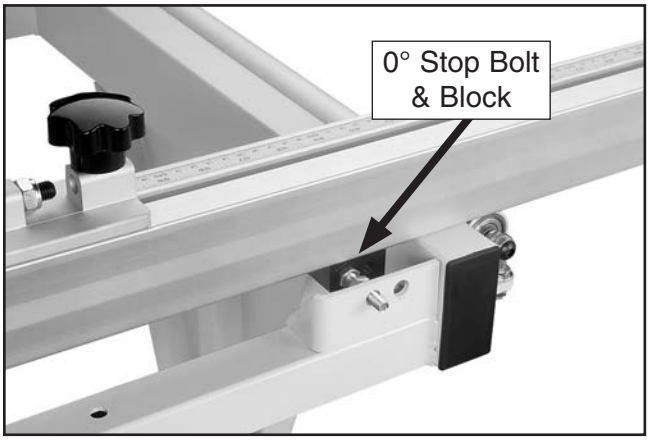

Figure 156. Stop block against 0° stop bolt.

4. Prepare scrap test piece by cutting it to 32" x 32" square, then number all four sides 1–4 (see **Figure 157**).

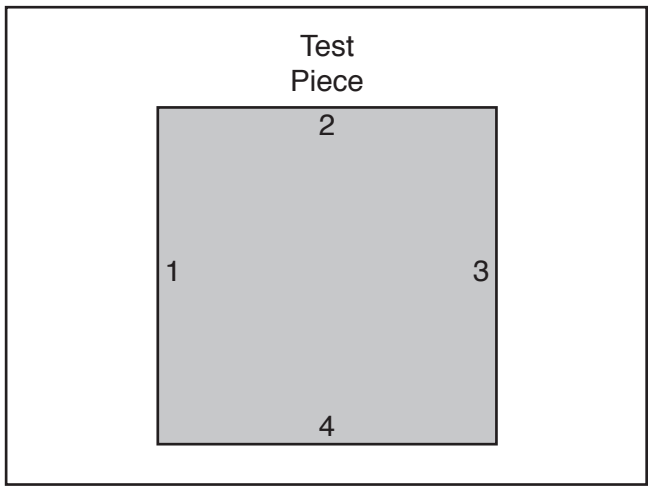

Figure 157. Fence adjustment test piece.

5. Use crosscut fence to cut ½" off of each side of test piece, then cut side 1 again (make five cuts total).

6. Measure test piece diagonally from corner-to-corner, as shown in **Figure 158**.

   —If both measurements are within 1/16", then you are finished with this procedure.

   —If both measurements are not within 1/16", then crosscut fence needs to be adjusted. Proceed to **Step 7**.

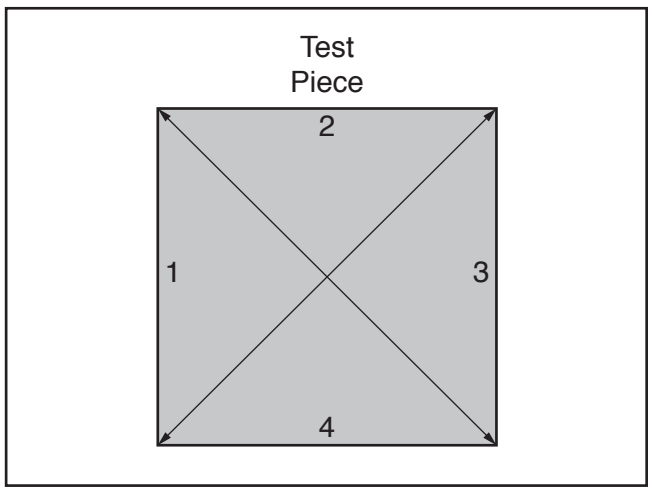

Figure 158. Diagonals to measure on test piece.

7. Loosen crosscut fence pivot lock knob to allow fence to pivot.

8. Loosen hex nut on the 0° stop bolt shown in **Figure 156** on the previous page, rotate 0° stop bolt to square crosscut fence, then retighten hex nut.

9. Move crosscut fence stop block against 0° stop bolt, then retighten pivot lock knob to secure fence in place.

10. Repeat **Steps 5–6**.

Riving Knife Mounting Block

The riving knife must be aligned with the blade when installed. If the riving knife is not aligned with the blade, then the workpiece will be forced sideways during the cut, which will increase the risk of kickback.

The riving knife mounts to a block that can be repositioned to correctly align the riving knife to the blade. The mounting block adjusts by turning the set screws in each corner of the block. **Figure 159** shows the set screws associated with controlling the mounting block position. Have patience when adjusting the mounting block, because it requires trial-and-error to perform with accuracy.

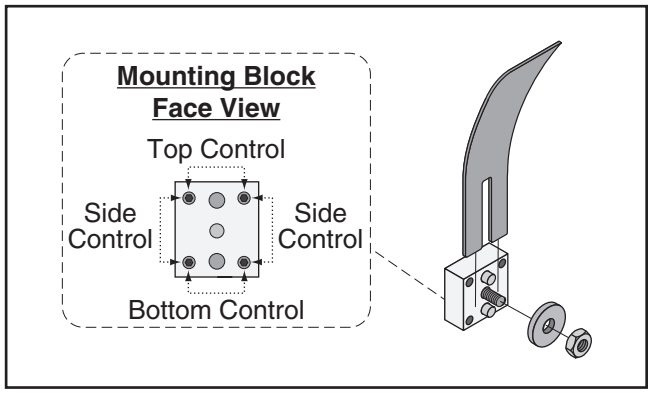

Figure 159. Riving knife mounting block adjustment controls.

All adjustment and alignment positions for the riving knife are covered on **Page 46** in the subsection **Riving Knife Installation & Removal**; the mounting block should not be adjusted unless you have been unable to mount the riving knife as instructed by these procedures.

Tools Needed	Qty
Straightedge	1
Wrench 19mm	1
Hex Wrench 4mm	1

To adjust riving knife mount block:

1. DISCONNECT MACHINE FROM POWER!

2. Raise blade guard and move it away from blade, then adjust blade tilt to 0° and raise blade all the way up.

3. Move sliding table all the way forward to expose blade cover, then lock it in place.

4. Use blade locks to open cover (see **Figure 87** on **Page 50**) and gain access to riving knife mounting block.

5. Loosen hex nut that secures riving knife to mounting block, and remove riving knife.

6. Adjust each pair of set screws that controls the direction required to move mounting block so riving knife can be aligned with blade. Make sure to move both set screws in even increments.

7. Re-install riving knife and check alignment with blade. Repeat **Step 6** as necessary until riving knife is properly aligned with blade.

   Note: *If you discover that riving knife is bent and cannot be properly aligned with the blade, it is possible to bend it into alignment, but make sure that the final result is precisely aligned so the risk of kickback is not increased. If the riving knife is bent, and you cannot easily bend it back into alignment, we recommend replacing it with a new one.*

8. Properly re-install riving knife as described on **Page 46**, close blade cover, properly reposition blade guard, and move sliding table back to center position.

Calibrating Rip Fence

There are three adjustments that affect the accuracy and operation of the rip fence: 1) Height above the table, 2) parallelism with the blade, and 3) rip fence scale position. If your cuts are not square when using the rip fence, check these adjustments. Parallelism is an important safety adjustment and the rip fence MUST be parallel with blade to minimize the risk of kickback.

Height Above Table

The rip fence and base should ride as close to the table surface as possible without touching it and with an even gap along the length. This is accomplished by adjusting the rip fence rail and the roller at the end of the fence base.

Tools Needed	Qty
Hex Wrench 6mm	1
Wrench 13mm	2
Wrench 19mm	1

To adjust rip fence height above table:

1. Observe gap between fence base and table along entire length.

   —If rail end of fence body is too low, loosen hex nuts that secure rail, raise rail until fence body gap is even, then retighten rail hex nuts.

   —If far end of fence base is too low, remove rail end cap, and slide fence base off rail.

   Loosen acorn nut shown in **Figure 160**, adjust wheel position, retighten acorn nut, and re-install fence base on rail.

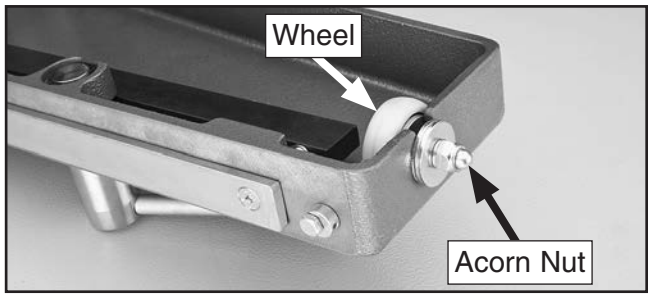

Figure 160. Rip fence base roller controls.

Parallelism To Blade

⚠CAUTION

Parallelism is an important safety adjustment. Rip fence MUST be parallel with blade to minimize risk of kickback.

Tool Needed	Qty
Wrench 19mm	1

To adjust rip fence parallel to main blade:

1. DISCONNECT MACHINE FROM POWER!

2. Raise main blade all the way up and tilt to 0°.

3. Slide rip fence as close to main blade as possible and check the gap that remains.

   —If gap between rip fence and main blade is not even at both ends, loosen rail hex nuts and adjust one end in or out until fence is parallel with blade, then retighten hex nuts.

Calibrating Rip Fence Scale

Tool Needed	Qty
Hex Wrench 4mm	1

To calibrate rip fence scale:

1. DISCONNECT MACHINE FROM POWER!

2. Make sure rip fence is parallel with main blade, then move it against blade so that it just touches teeth.

3. Observe reading on scale underneath rip fence (see **Figure 161** for an example).

   —If scale is not zero, loosen cap screws that secure it to table, adjust it so it reads zero, then retighten cap screws.

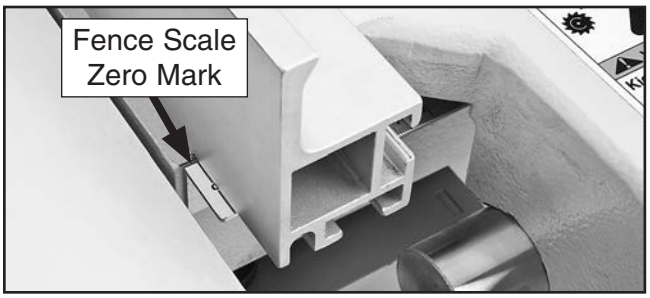

Figure 161. Rip fence scale zero mark.

SECTION 8: WIRING

These pages are current at the time of printing. However, in the spirit of improvement, we may make changes to the electrical systems of future machines. Compare the manufacture date of your machine to the one stated in this manual, and study this section carefully.

If there are differences between your machine and what is shown in this section, call Technical Support at (570) 546-9663 for assistance BEFORE making any changes to the wiring on your machine. An updated wiring diagram may be available. **Note:** *Please gather the serial number and manufacture date of your machine before calling. This information can be found on the main machine label.*

⚠WARNING
Wiring Safety Instructions

SHOCK HAZARD. Working on wiring that is connected to a power source is extremely dangerous. Touching electrified parts will result in personal injury including but not limited to severe burns, electrocution, or death. Disconnect the power from the machine before servicing electrical components!

MODIFICATIONS. Modifying the wiring beyond what is shown in the diagram may lead to unpredictable results, including serious injury or fire. This includes the installation of unapproved aftermarket parts.

WIRE CONNECTIONS. All connections must be tight to prevent wires from loosening during machine operation. Double-check all wires disconnected or connected during any wiring task to ensure tight connections.

CIRCUIT REQUIREMENTS. You MUST follow the requirements at the beginning of this manual when connecting your machine to a power source.

WIRE/COMPONENT DAMAGE. Damaged wires or components increase the risk of serious personal injury, fire, or machine damage. If you notice that any wires or components are damaged while performing a wiring task, replace those wires or components.

MOTOR WIRING. The motor wiring shown in these diagrams is current at the time of printing but may not match your machine. If you find this to be the case, use the wiring diagram inside the motor junction box.

CAPACITORS/INVERTERS. Some capacitors and power inverters store an electrical charge for up to 10 minutes after being disconnected from the power source. To reduce the risk of being shocked, wait at least this long before working on capacitors.

EXPERIENCING DIFFICULTIES. If you are experiencing difficulties understanding the information included in this section, contact our Technical Support at (570) 546-9663.

NOTICE

The photos and diagrams included in this section are best viewed in color. You can view these pages in color at www.grizzly.com.

COLOR KEY

BLACK	Bk	BLUE	Bl	YELLOW	Yl	LIGHT BLUE	Lb
WHITE	Wt	BROWN	Br	YELLOW GREEN	Yg	BLUE WHITE	Bw
GREEN	Gn	GRAY	Gy	PURPLE	Pu	TURQUOISE	Tu
RED	Rd	ORANGE	Or	PINK	Pk		

Wiring Overview

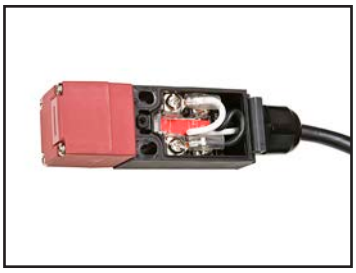

Figure 162. Door limit switch.



Figure 164. Emergency stop.



Figure 165. Blade guard limit switch.

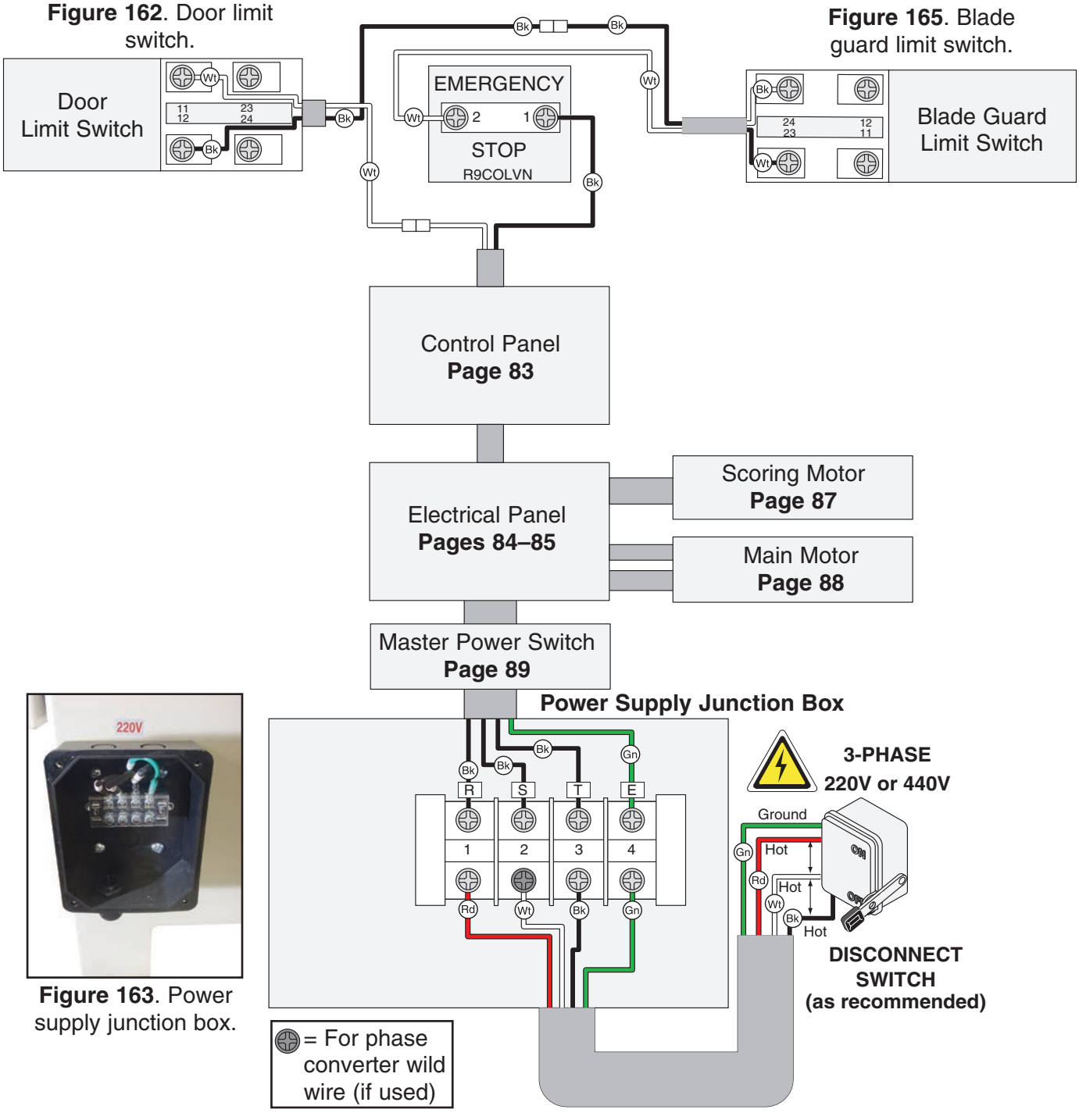

Figure 163. Power supply junction box.

Component Location Index



Figure 166. Front view of sliding table saw.

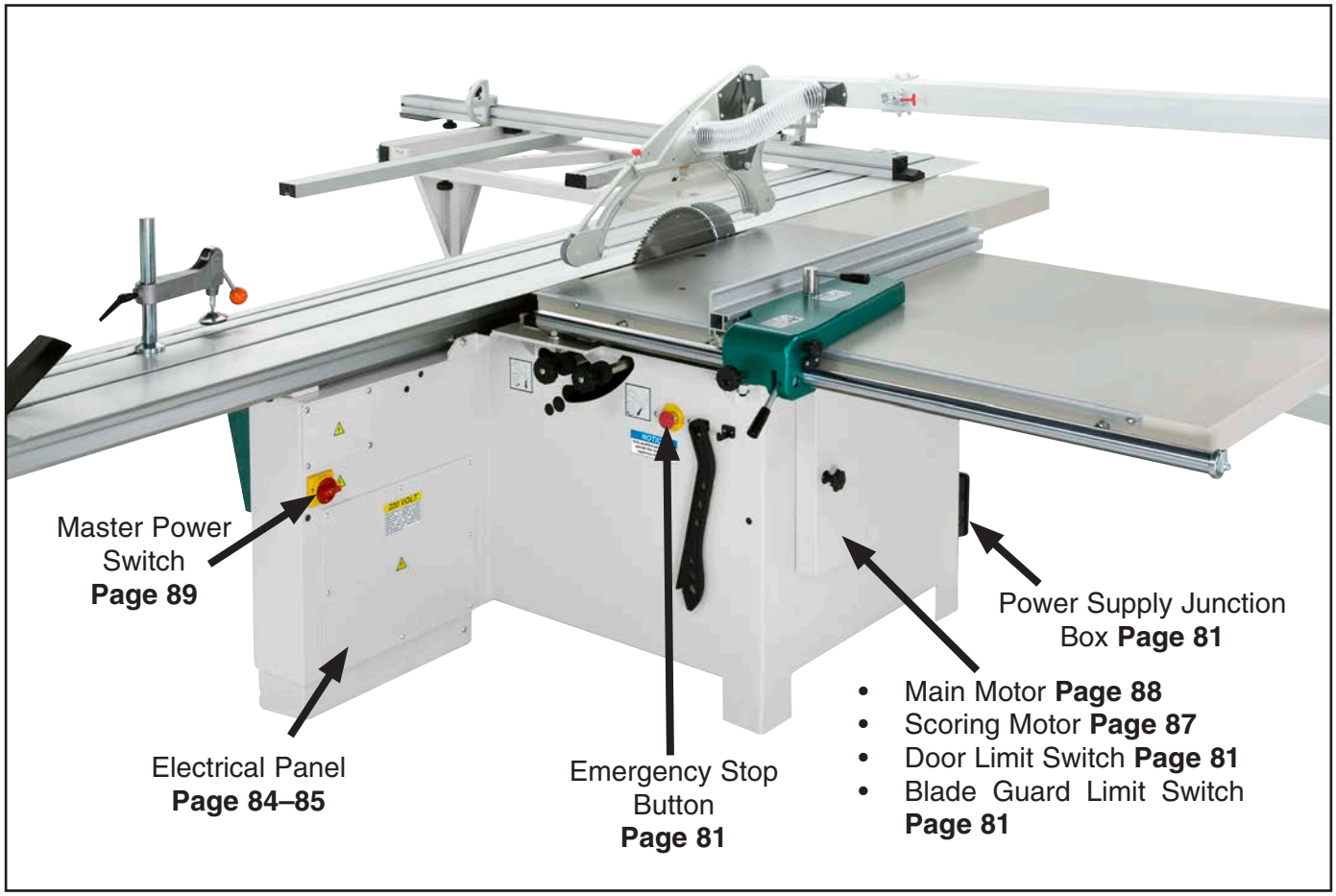

Figure 167. Rear view of sliding table saw.

READ ELECTRICAL SAFETY ON PAGE 80!

Control Panel Wiring

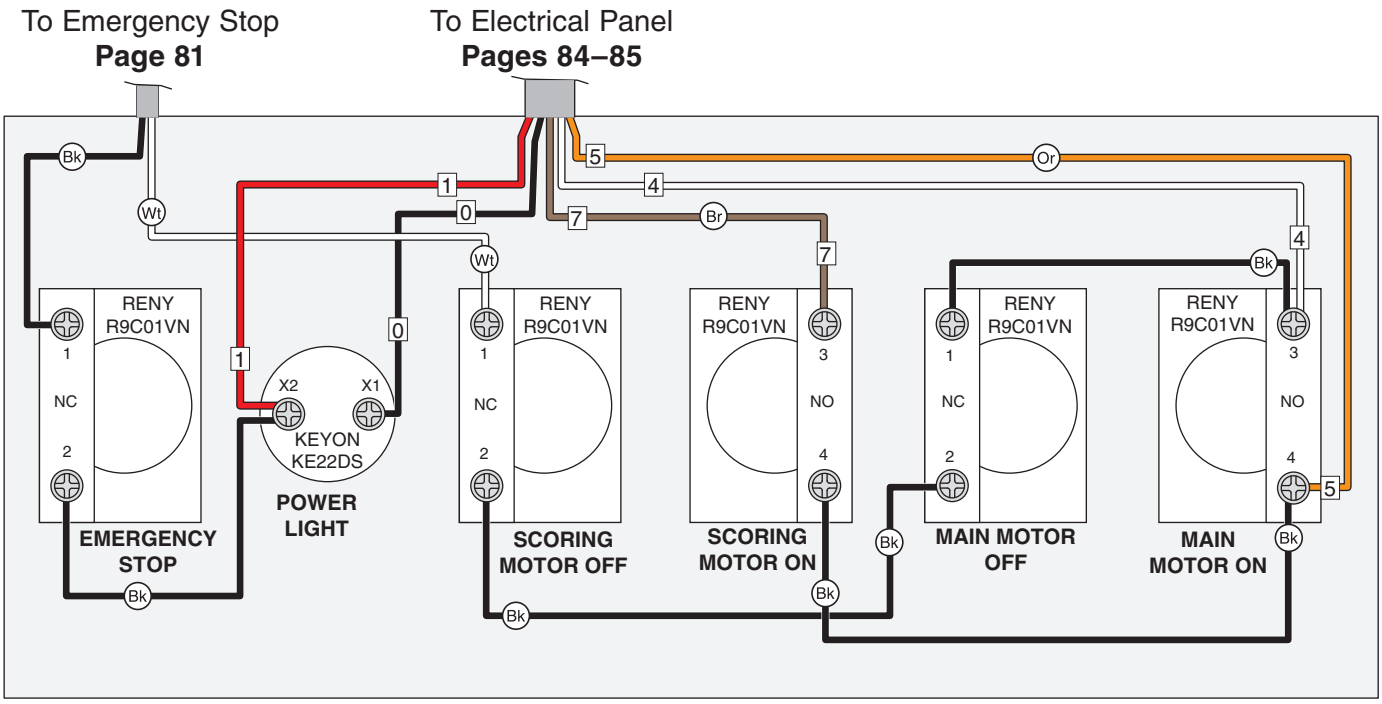

Control Panel Wiring Photo

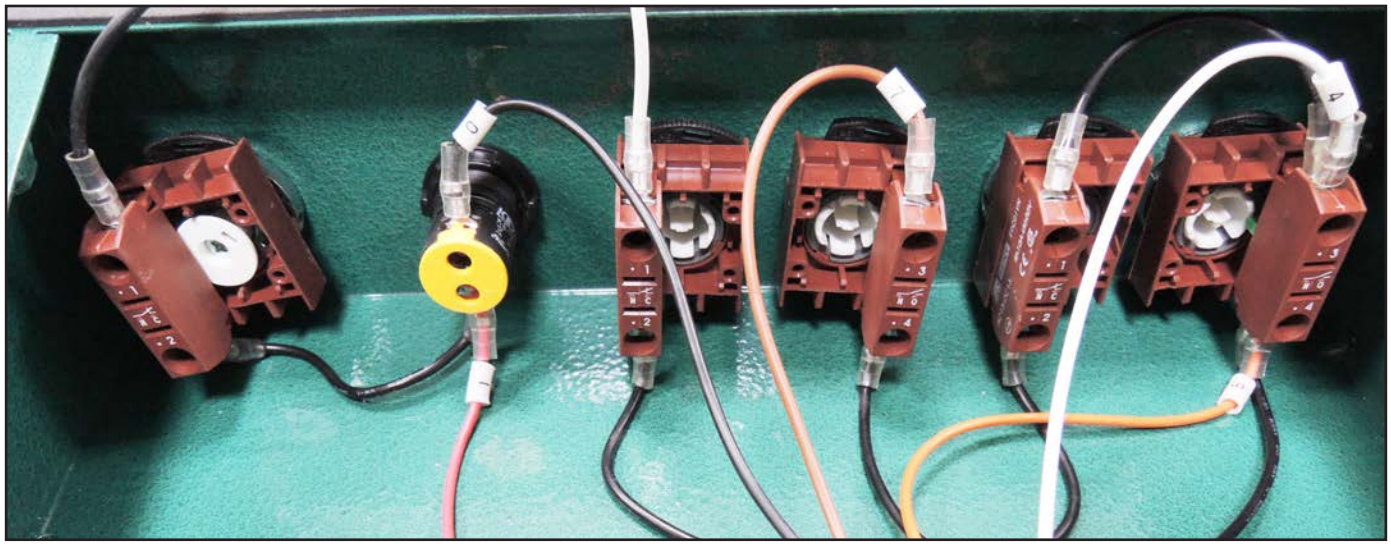

Figure 168. Control panel wiring.

220V Electrical Panel Wiring

To Master Power Switch **Page 89**

To Control Panel **Page 83**

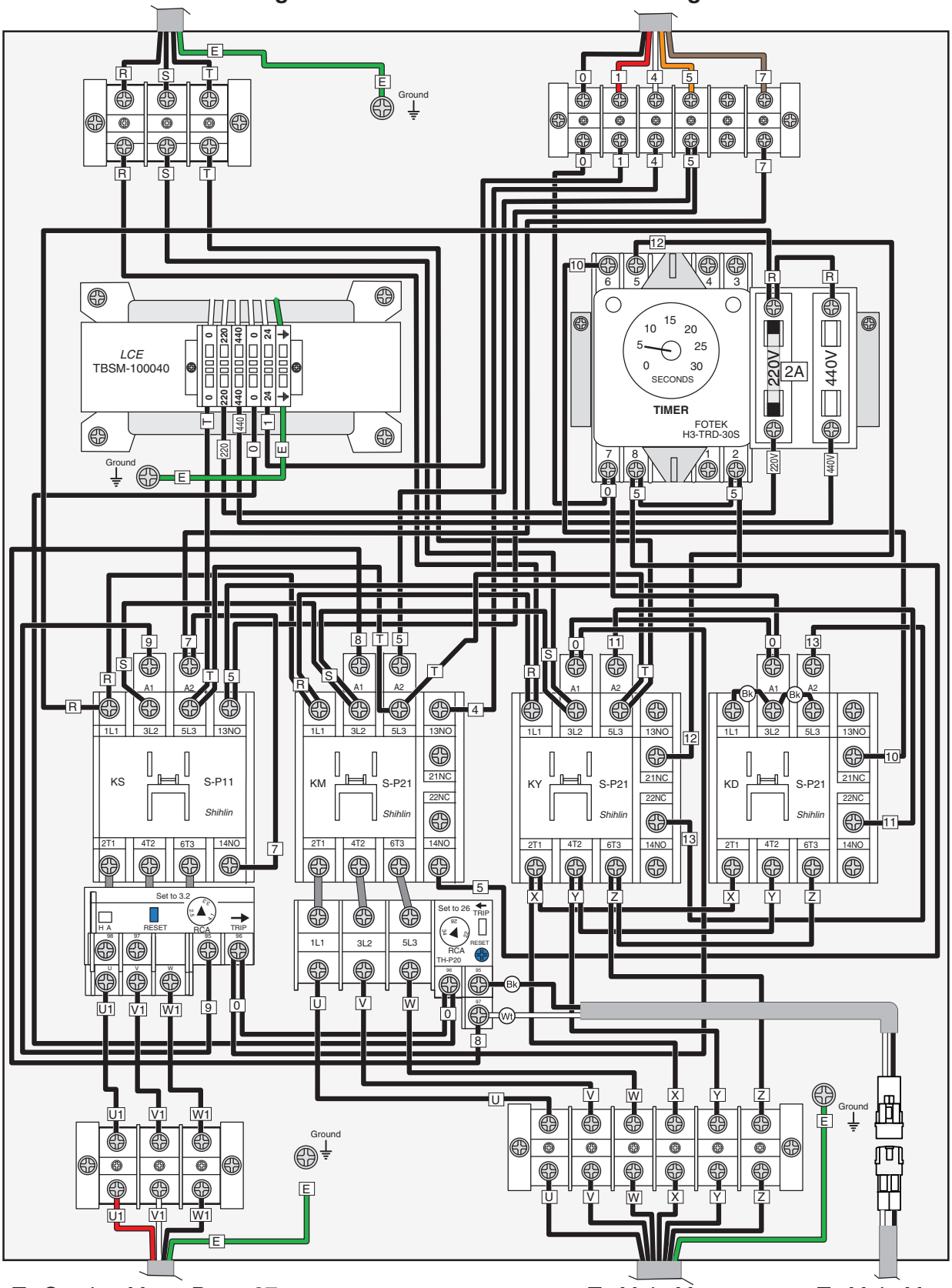

To Scoring Motor **Page 87**

To Main Motor **Page 88**

To Main Motor Thermostat **Page 88**

STOP ***READ ELECTRICAL SAFETY ON PAGE 80!***

440V Electrical Panel Wiring

To Master Power Switch **Page 89**

To Control Panel **Page 83**

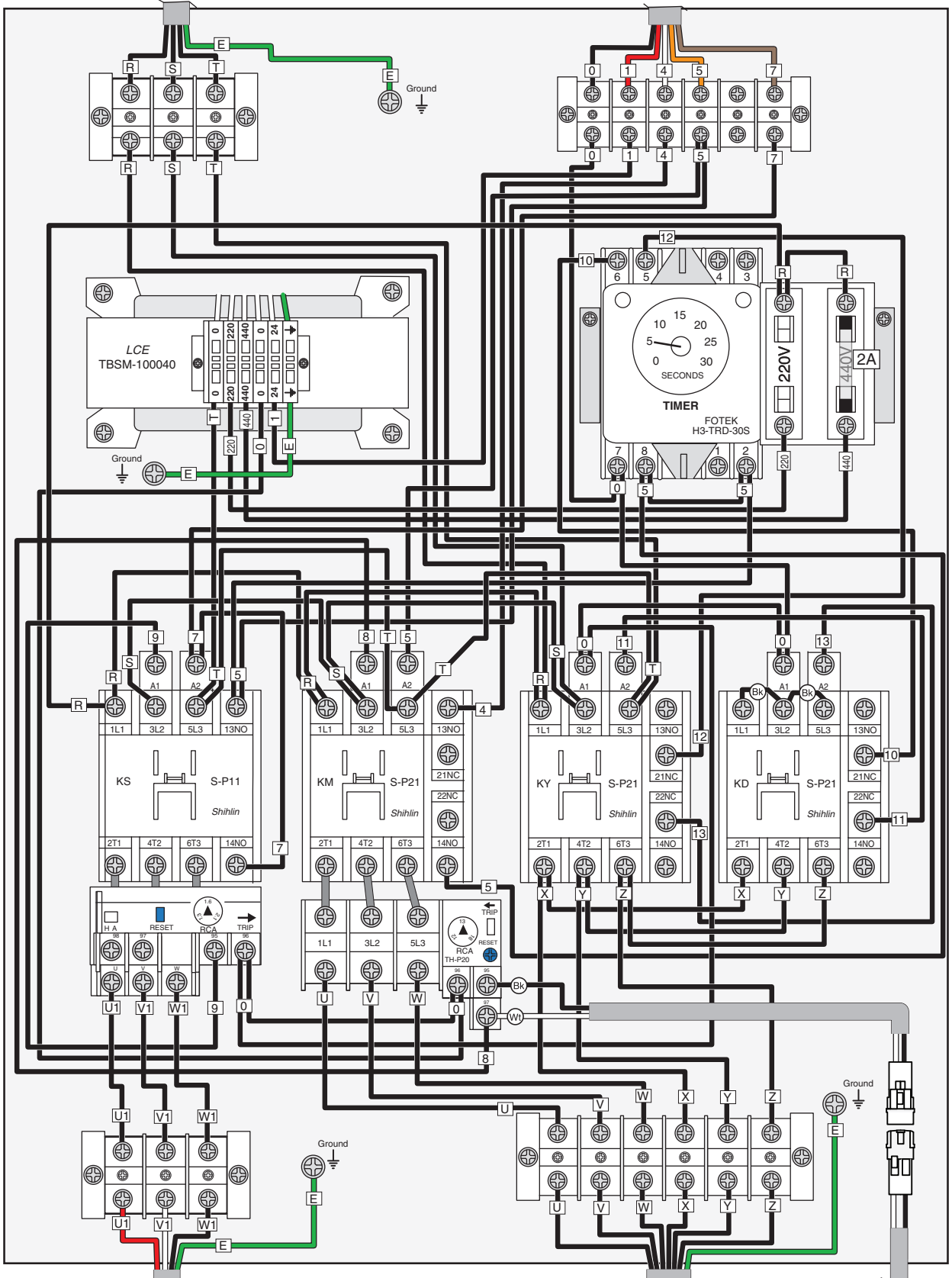

To Scoring Motor **Page 87**

To Main Motor **Page 88**

To Main Motor Thermostat **Page 88**

Electrical Panel Wiring Photo



Figure 169. Electrical panel wiring.

Scoring Motor Wiring

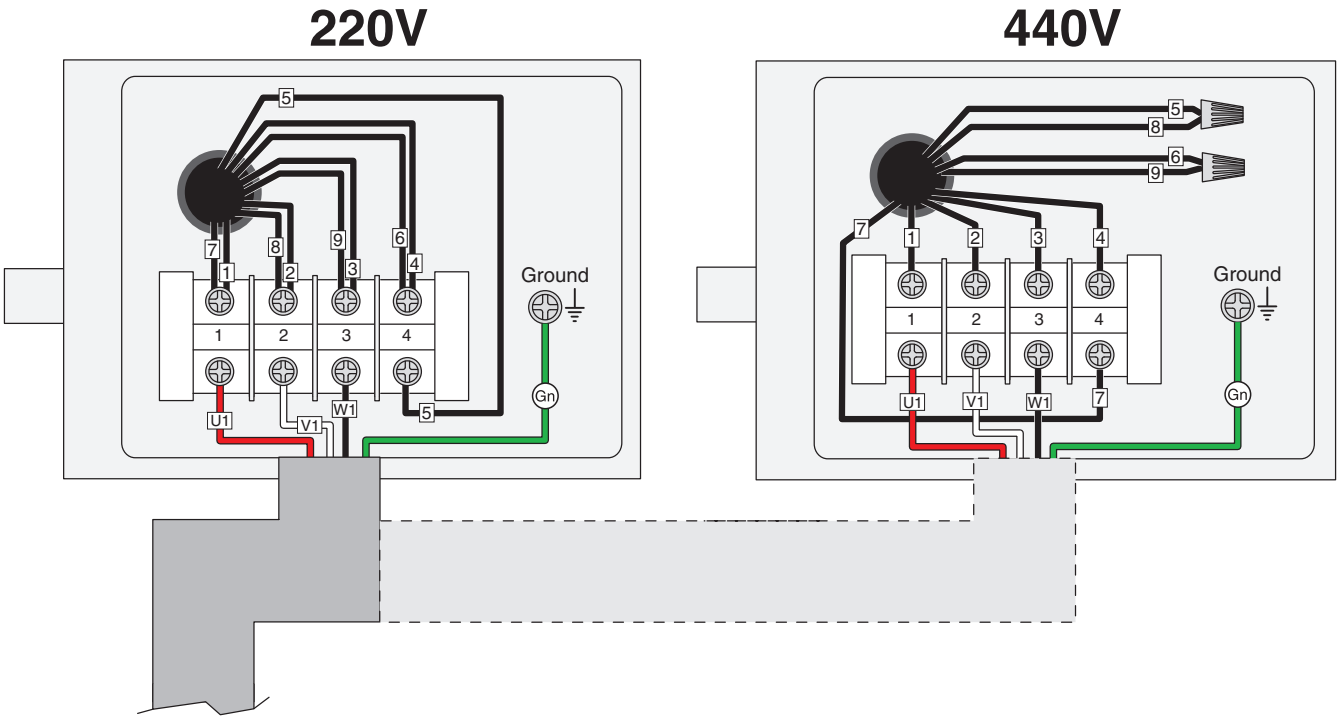

Pages 84–85

Scoring Motor Wiring Photo



Figure 170. Scoring motor wiring.

Main Motor Wiring

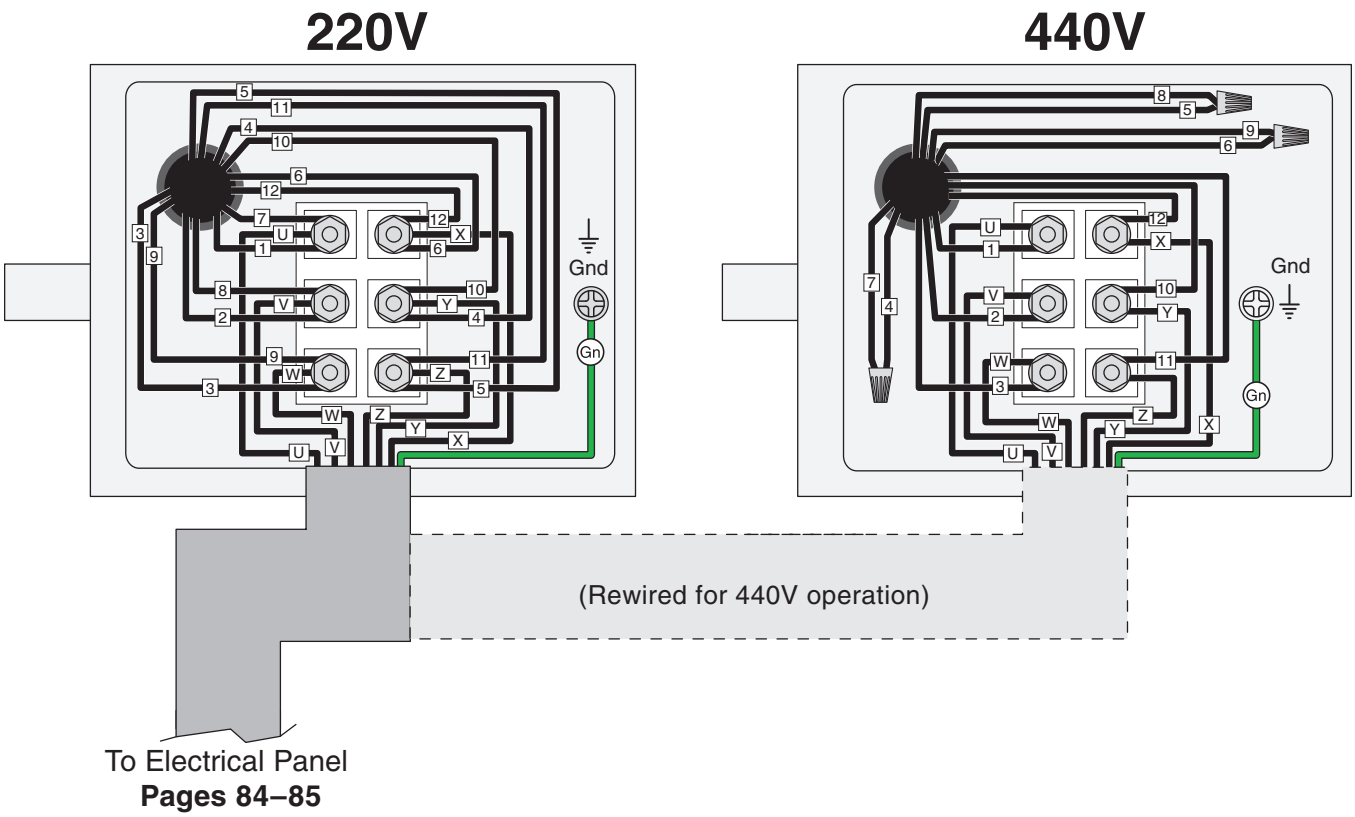

Main Motor Wiring Photo

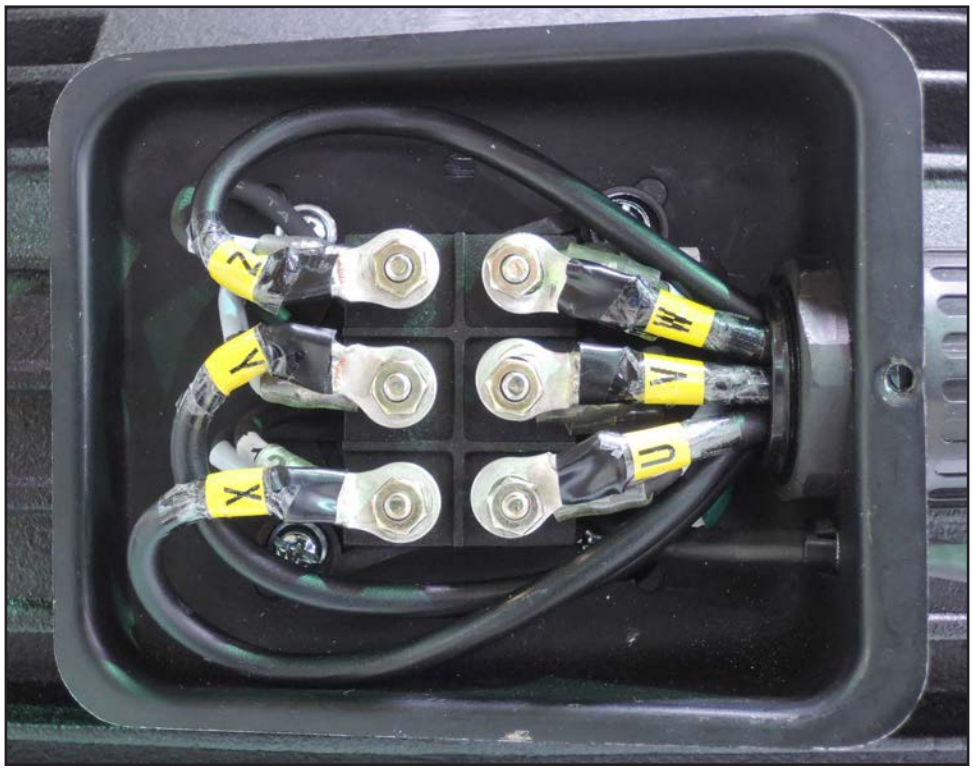

Figure 171. Main motor wiring.

STOP *READ ELECTRICAL SAFETY ON PAGE 80!*

Master Power Switch Wiring

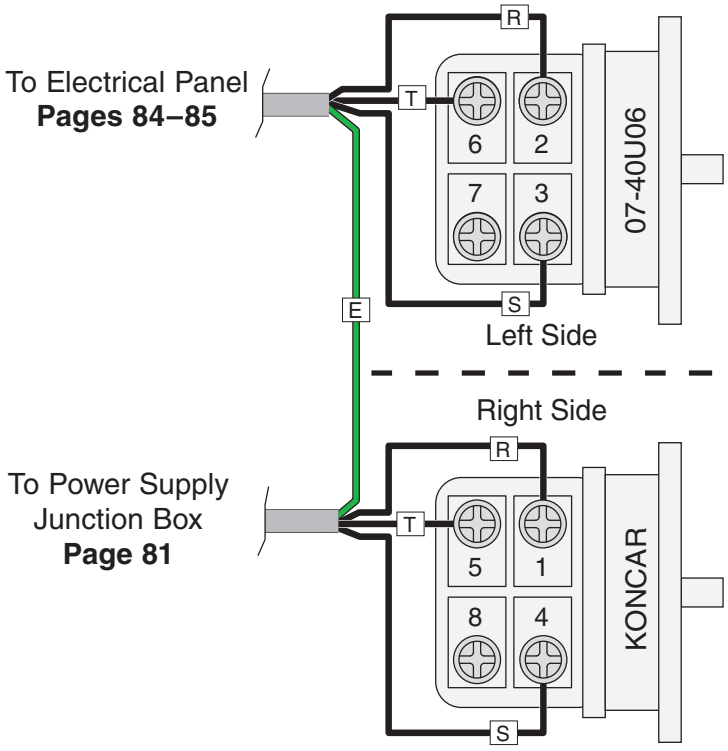

Master Power Switch Photo



Figure 172. Master power switch right side.

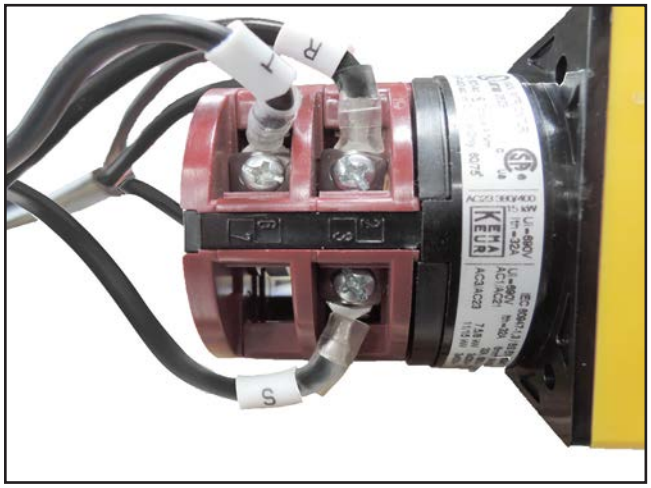

Figure 173. Master power switch left side.

SECTION 9: PARTS

We do our best to stock replacement parts when possible, but we cannot guarantee that all parts shown are available for purchase. Call **(800) 523-4777** or visit **www.grizzly.com/parts** to check for availability.

Body

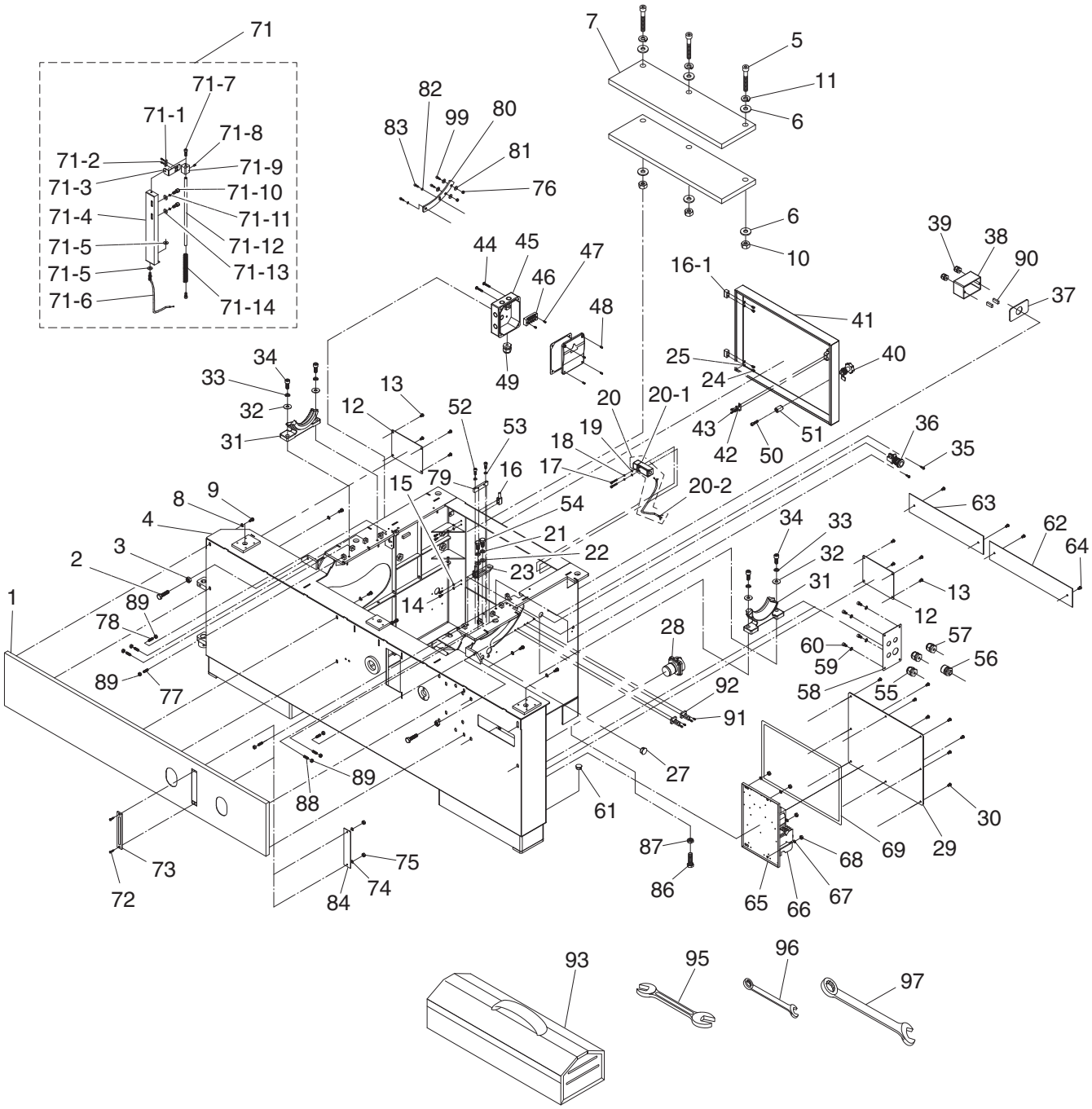

Body Parts List

REF	PART #	DESCRIPTION
1	P0764Z0001	FRONT PANEL
2	P0764Z0002	HEX BOLT M10-1.5 X 40
3	P0764Z0003	HEX NUT M10-1.5
4	P0764Z0004	MACHINE FRAME
5	P0764Z0005	CAP SCREW M12-1.75 X 80
6	P0764Z0006	FLAT WASHER 12MM
7	P0764Z0007	PLATE
8	P0764Z0008	LOCK WASHER 6MM
9	P0764Z0009	CAP SCREW M6-1 X 16
10	P0764Z0010	LOCK NUT M12-1.75
11	P0764Z0011	LOCK WASHER 12MM
12	P0764Z0012	ATTACHMENT ACCESS PANEL
13	P0764Z0013	BUTTON HD CAP SCR M6-1 X 12
14	P0764Z0014	CAP SCREW M5-.8 X 12
15	P0764Z0015	LOCK WASHER 5MM
16	P0764Z0016	HINGE POST
16-1	P0764Z0016-1	HINGE
17	P0764Z0017	CAP SCREW M4-.7 X 30
18	P0764Z0018	LOCK WASHER 4MM
19	P0764Z0019	FLAT WASHER 4MM
20	P0764Z0020	DOOR LIMIT SWITCH ASSEMBLY
20-1	P0764Z0020-1	LIMIT SWITCH SHINOZAK AZD-211
20-2	P0764Z0020-2	LIMIT SWITCH CORD 20G 2W 16"
21	P0764Z0021	LOCK WASHER 12MM
22	P0764Z0022	FLAT WASHER 12MM
23	P0764Z0023	PLATE
24	P0764Z0024	CAP SCREW M5-.8 X 8
25	P0764Z0025	LOCK WASHER 5MM
27	P0764Z0027	PANEL PLUG 38MM
28	P0764Z0028	MASTER POWER SWITCH KONCAR 07-40U06
29	P0764Z0029	ELECTRICAL BOX ACCESS PANEL
30	P0764Z0030	BUTTON HD CAP SCR M6-1 X 10
31	P0764Z0031	TRUNNION
32	P0764Z0032	FLAT WASHER 10MM
33	P0764Z0033	LOCK WASHER 10MM
34	P0764Z0034	CAP SCREW M10-1.5 X 35
35	P0764Z0035	TAP SCREW M5 X 20
36	P0764Z0036	E-STOP BUTTON RENY R2-PNR4-1B-R
37	P0764Z0037	SWITCH BOX GASKET
38	P0764Z0038	SWITCH BOX
39	P0764Z0039	STRAIN RELIEF PG21 LT STRAIGHT
40	P0764Z0040	DOOR KNOB ASSEMBLY
41	P0764Z0041	DOOR W/HINGE ASSEMBLIES
42	P0764Z0042	LOCK WASHER 4MM
43	P0764Z0043	PHLP HD SCR M4-.7 X 12
44	P0764Z0044	BUTTON HD CAP SCR M6-1 X 20
45	P0764Z0045	JUNCTION BOX
46	P0764Z0046	TERMINAL BAR 4P PB2504
47	P0764Z0047	PHLP HD SCR M5-.8 X 8
48	P0764Z0048	BUTTON HD CAP SCR M5-.8 X 12
49	P0764Z0049	STRAIN RELIEF PG20 LT STRAIGHT
50	P0764Z0050	CAP SCREW M6-1 X 45
51	P0764Z0051	DOOR LATCH
52	P0764Z0052	CAP SCREW M6-1 X 30
53	P0764Z0053	LOCK WASHER 6MM
54	P0764Z0054	HEX BOLT M12-1.75 X 25
55	P0764Z0055	STRAIN RELIEF M20 TYPE-6 ST
56	P0764Z0056	CONDUIT FITTING PGN21-28 LT STRAIGHT
57	P0764Z0057	STRAIN RELIEF PG20 LT STRAIGHT
58	P0764Z0058	STRAIN RELIEF PLATE
59	P0764Z0059	LOCK WASHER 6MM
60	P0764Z0060	CAP SCREW M6-1 X 12
61	P0764Z0061	PANEL PLUG 12MM
62	P0764Z0062	COVER PLATE (RH)
63	P0764Z0063	COVER PLATE (LH)
64	P0764Z0064	FLANGE SCREW M6-1 X 10
65	P0764Z0065	ELECTRICAL MOUNTING PLATE
66	P0764Z0066	ELECTRICAL PANEL
67	P0764Z0067	FLAT WASHER 6MM
68	P0764Z0068	FLANGE NUT M6-1
69	P0764Z0069	GASKET 2 X 300 X 7.5MM
71	P0764Z0071	TILT INDICATOR ASSEMBLY
71-1	P0764Z0071-1	FLAT WASHER 5MM
71-2	P0764Z0071-2	PHLP HD SCR M5-.8 X 10
71-3	P0764Z0071-3	POINTER
71-4	P0764Z0071-4	SUPPORT PLATE
71-5	P0764Z0071-5	FLAT WASHER 6MM
71-6	P0764Z0071-6	STEEL WIRE
71-7	P0764Z0071-7	CAP SCREW M5-.8 X 10
71-8	P0764Z0071-8	SET SCREW M5-.8 X 10
71-9	P0764Z0071-9	POINTER MOUNT
71-10	P0764Z0071-10	CAP SCREW M6-1 X 12
71-11	P0764Z0071-11	LOCK WASHER 6MM
71-12	P0764Z0071-12	SHAFT
71-13	P0764Z0071-13	FLAT WASHER 6MM
71-14	P0764Z0071-14	COMPRESSION SPRING
72	P0764Z0072	FLANGE SCREW M4-.7 X 20
73	P0764Z0073	TILT SCALE
74	P0764Z0074	FLAT WASHER 4MM
75	P0764Z0075	HEX NUT M4-.7
76	P0764Z0076	LOCK NUT M5-.8
77	P0764Z0077	SET SCREW M8-1.25 X 30
78	P0764Z0078	SET SCREW M8-1.25 X 40
79	P0764Z0079	BLOCK
80	P0764Z0080	TRUNNION PLATE
81	P0764Z0081	FLAT WASHER 5MM
82	P0764Z0082	LOCK WASHER 6MM
83	P0764Z0083	CAP SCREW M6-1 X 12
84	P0764Z0084	TILT SCALE WINDOW
86	P0764Z0086	HEX BOLT M16-2 X 50
87	P0764Z0087	HEX NUT M16-2
88	P0764Z0088	SET SCREW M8-1.25 X 25
89	P0764Z0089	HEX NUT M8-1.25
90	P0764Z0090	CORD CONNECTOR
91	P0764Z0091	TAP SCREW M4 X 16
92	P0764Z0092	TOOL HANGER
93	P0764Z0093	TOOLBOX
95	P0764Z0095	WRENCH 24 X 27MM OPEN-ENDS
96	P0764Z0096	WRENCH 19MM COMBO
97	P0764Z0097	WRENCH 30MM COMBO
99	P0764Z0099	CAP SCREW M5-.8 X 16

Main Tables

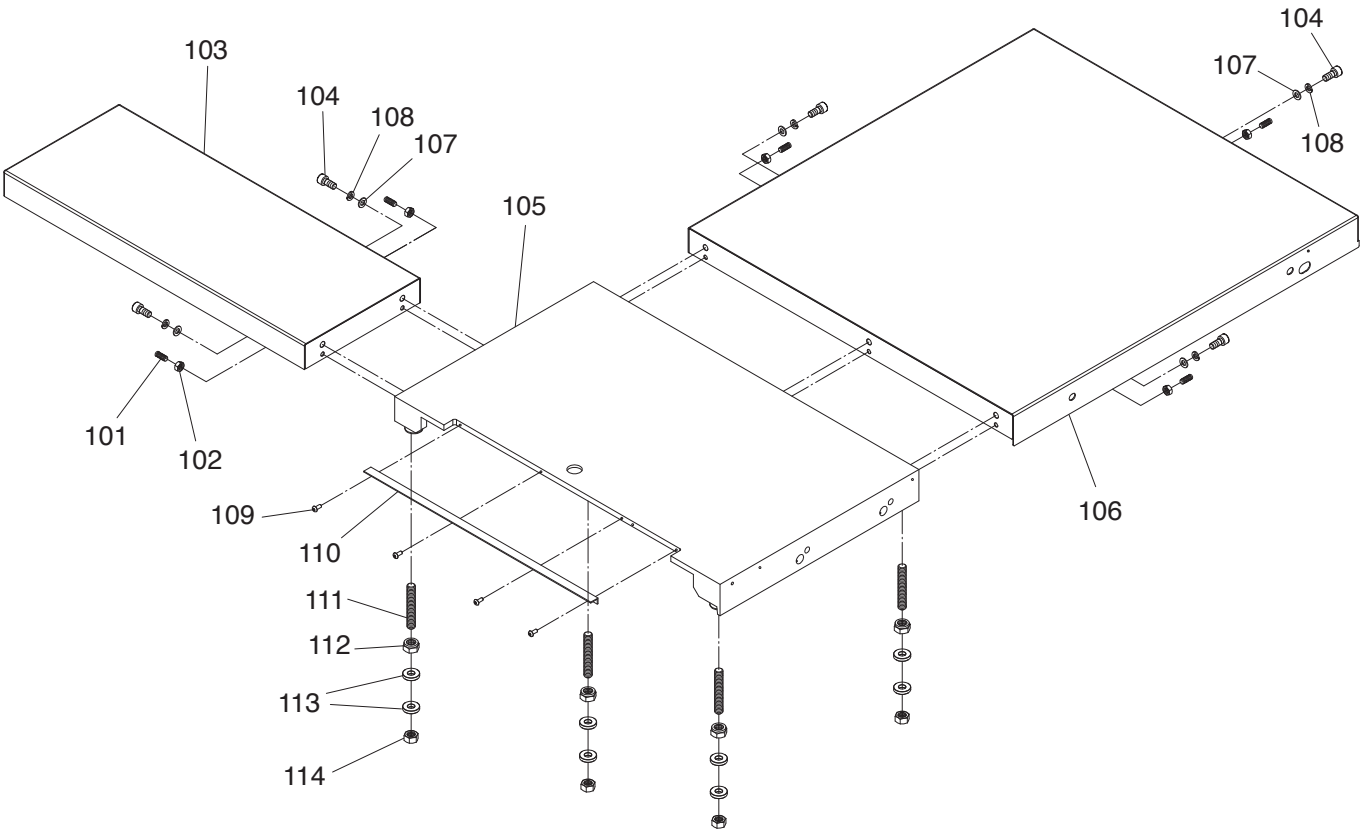

REF	PART #	DESCRIPTION
101	P0764Z0101	SET SCREW M10-1.5 X 20
102	P0764Z0102	HEX NUT M10-1.5
103	P0764Z0103	EXTENSION TABLE (LH)
104	P0764Z0104	CAP SCREW M10-1.5 X 25
105	P0764Z0105	MAIN TABLE
106	P0764Z0106	EXTENSION TABLE (RH)
107	P0764Z0107	FLAT WASHER 10MM

REF	PART #	DESCRIPTION
108	P0764Z0108	LOCK WASHER 10MM
109	P0764Z0109	BUTTON HD CAP SCR M6-1 X 12
110	P0764Z0110	TABLE INSERT
111	P0764Z0111	STUD-FT M16-2 X 100
112	P0764Z0112	LOCK NUT M16-2
113	P0764Z0113	FLAT WASHER 16MM
114	P0764Z0114	HEX NUT M16-2

Control Panel

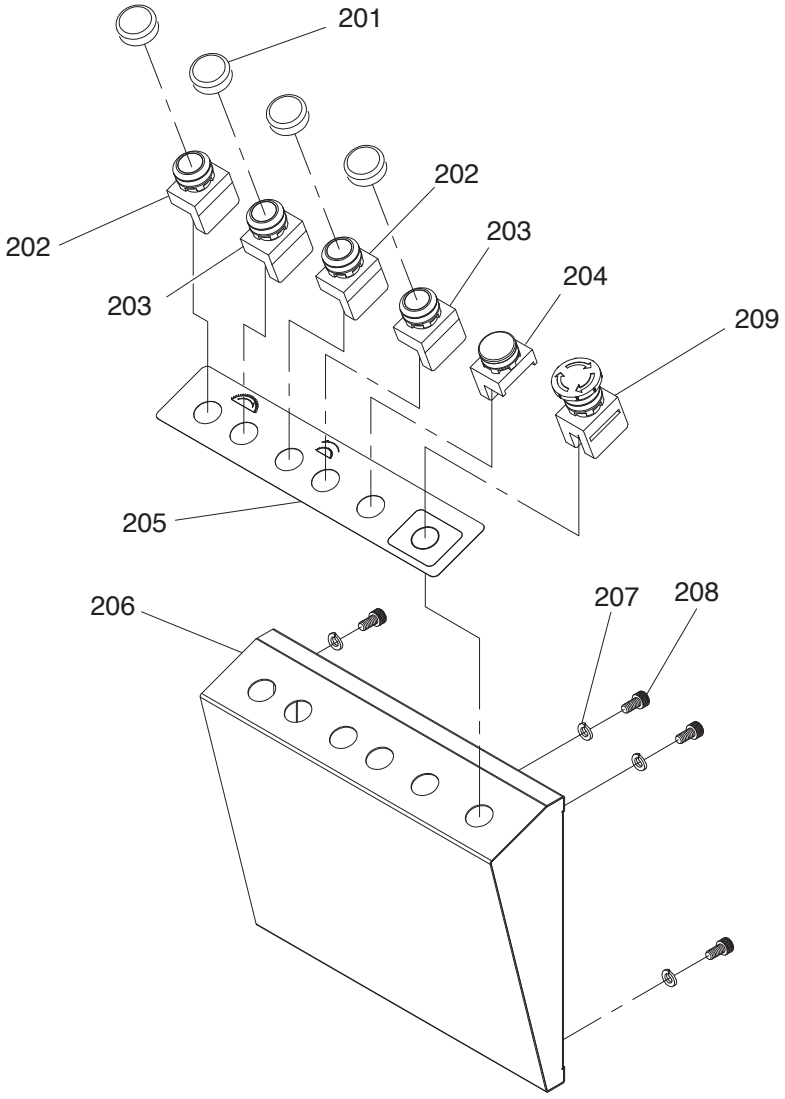

REF	PART #	DESCRIPTION
201	P0764Z0201	BUTTON DUST COVER (PLASTIC)
202	P0764Z0202	ON BUTTON RENY R9C01VN 22MM GRN
203	P0764Z0203	OFF BUTTON RENY R9C01VN 22MM RED
204	P0764Z0204	POWER LAMP KEYON KE22DS
205	P0764Z0205	CONTROL PANEL LABEL

REF	PART #	DESCRIPTION
206	P0764Z0206	CONTROL PANEL PLATE
207	P0764Z0207	LOCK WASHER 6MM
208	P0764Z0208	CAP SCREW M6-1 X 16
209	P0764Z0209	E-STOP BUTTON RENY R9C01VN 22MM

Blade Enclosure

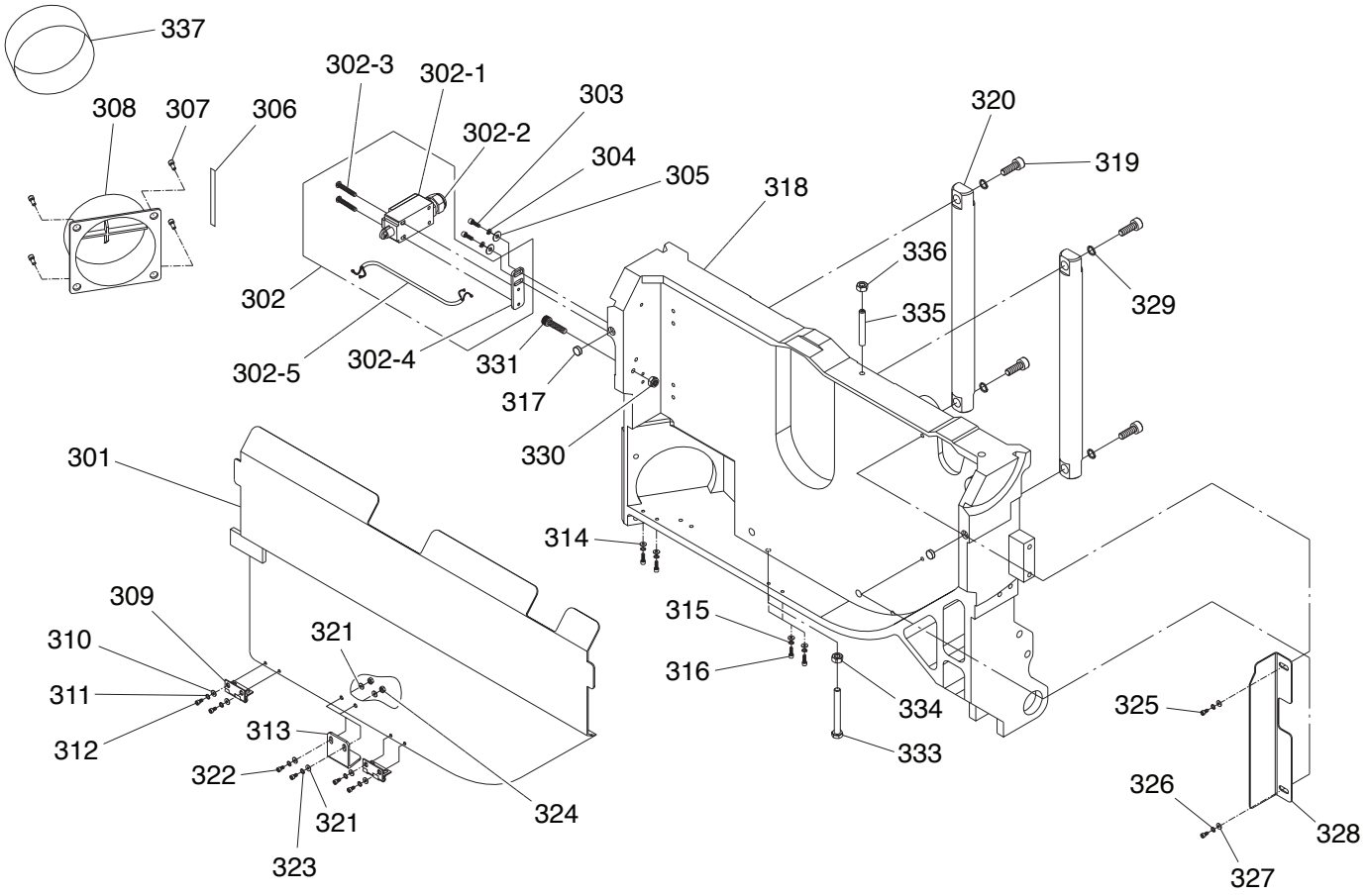

REF	PART #	DESCRIPTION
301	P0764Z0301	BLADE COVER
302	P0764Z0302	BLADE COVER LIMIT SWITCH ASSY
302-1	P0764Z0302-1	BLADE LIMIT SWITCH SHINOZAK AZD-1112
302-2	P0764Z0302-2	STRAIN RELIEF PG11
302-3	P0764Z0302-3	PHLP HD SCR M4-.7 X 35
302-4	P0764Z0302-4	LIMIT SWITCH BRACKET
302-5	P0764Z0302-5	LIMIT SWITCH CORD 20G 2W 9FT
303	P0764Z0303	CAP SCREW M5-.8 X 12
304	P0764Z0304	LOCK WASHER 5MM
305	P0764Z0305	FLAT WASHER 5MM
306	P0764Z0306	CUSHION STRIP
307	P0764Z0307	FLANGE BOLT M8-1.25 X 12
308	P0764Z0308	DUST PORT 5"
309	P0764Z0309	BLADE COVER HINGE
310	P0764Z0310	FLAT WASHER 5MM
311	P0764Z0311	LOCK WASHER 5MM
312	P0764Z0312	CAP SCREW M5-.8 X 8
313	P0764Z0313	L-BRACKET
314	P0764Z0314	FLAT WASHER 5MM
315	P0764Z0315	LOCK WASHER 5MM
316	P0764Z0316	CAP SCREW M5-.8 X 10

REF	PART #	DESCRIPTION
317	P0764Z0317	MAGNET
318	P0764Z0318	BLADE SHROUD
319	P0764Z0319	CAP SCREW M12-1.75 X 45
320	P0764Z0320	SLIDE SHAFT
321	P0764Z0321	FLAT WASHER 5MM
322	P0764Z0322	CAP SCREW M5-.8 X 16
323	P0764Z0323	LOCK WASHER 5MM
324	P0764Z0324	HEX NUT M5-.8
325	P0764Z0325	CAP SCREW M6-1 X 10
326	P0764Z0326	LOCK WASHER 6MM
327	P0764Z0327	FLAT WASHER 6MM
328	P0764Z0328	BLADE SHROUD L-BRACKET
329	P0764Z0329	LOCK WASHER 12MM
330	P0764Z0330	LOCK NUT M6-1
331	P0764Z0331	CAP SCREW M6-1 X 25
333	P0764Z0333	HEX BOLT M8-1.25 X 75
334	P0764Z0334	HEX NUT M8-1.25
335	P0764Z0335	SET SCREW M8-1.25 X 50
336	P0764Z0336	HEX NUT M8-1.25
337	P0764Z0337	DUST GASKET

Main Motor

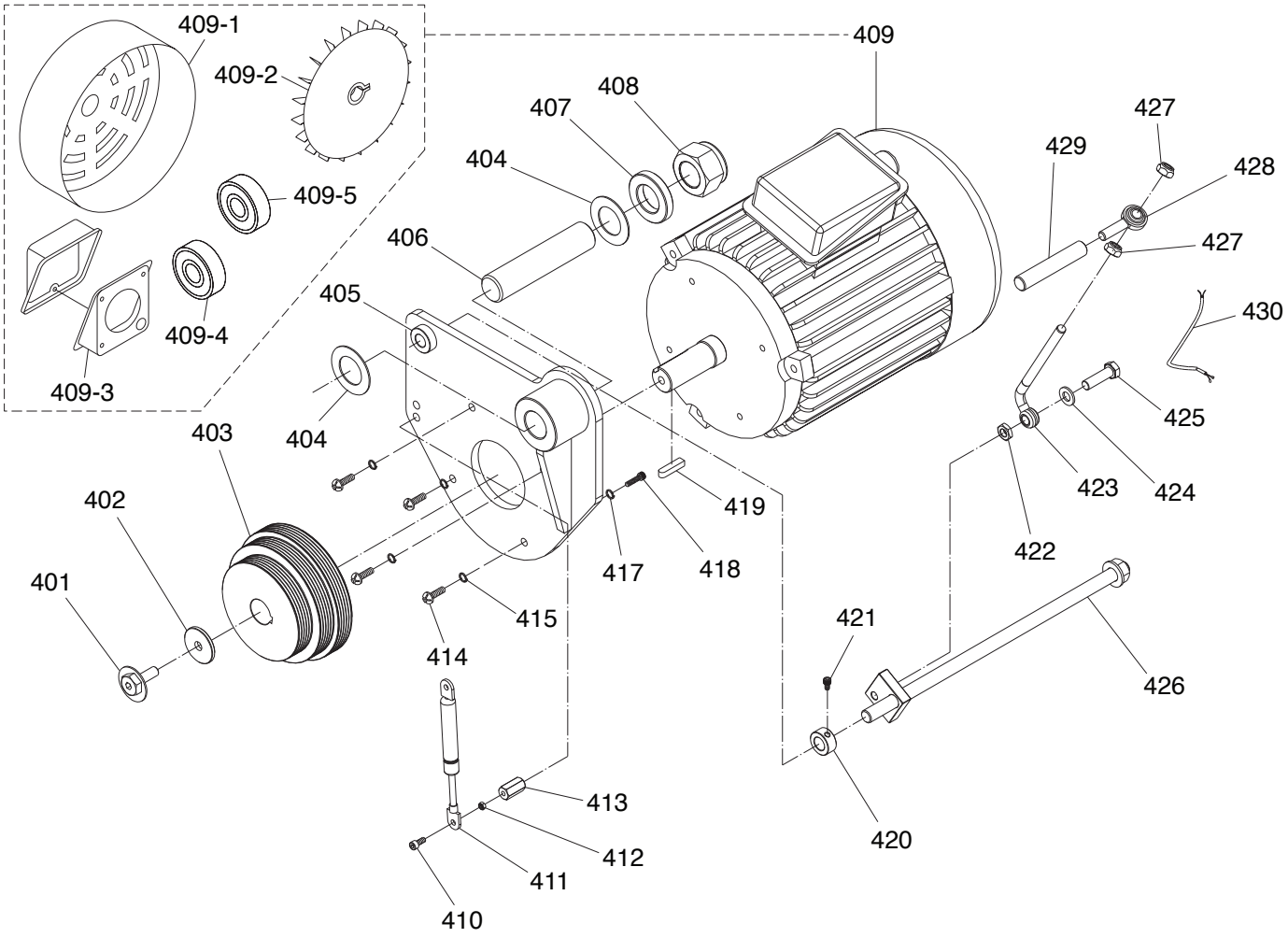

REF	PART #	DESCRIPTION
401	P0764Z0401	FLANGE CAP SCREW M10-1.5 X 20
402	P0764Z0402	PULLEY FLAT WASHER 10MM
403	P0764Z0403	MOTOR PULLEY
404	P0764Z0404	THRUST WASHER BEARING 32 X 54 X 1.5MM
405	P0764Z0405	MAIN MOTOR PLATE
406	P0764Z0406	MAIN MOTOR SHAFT
407	P0764Z0407	SPACER
408	P0764Z0408	LOCK NUT M30-3.5
409	P0764Z0409	MAIN MOTOR 10HP 220V/440V 3-PH
409-1	P0764Z0409-1	MOTOR FAN COVER
409-2	P0764Z0409-2	MOTOR FAN
409-3	P0764Z0409-3	MOTOR JUNCTION BOX
409-4	P0764Z0409-4	BALL BEARING 6206ZZ (FRONT)
409-5	P0764Z0409-5	BALL BEARING 6205ZZ (REAR)
410	P0764Z0410	CAP SCREW M6-1 X 20
411	P0764Z0411	GAS SPRING 25KG, 60L
412	P0764Z0412	HEX NUT M6-1

REF	PART #	DESCRIPTION
413	P0764Z0413	SHAFT
414	P0764Z0414	HEX HEAD BOLT M8-1.25 X 25
415	P0764Z0415	LOCK WASHER 8MM
417	P0764Z0417	LOCK WASHER 8MM
418	P0764Z0418	CAP SCREW M8-1.25 X 20
419	P0764Z0419	KEY 8 X 8 X 35
420	P0764Z0420	COLLAR
421	P0764Z0421	CAP SCREW M6-1 X 12
422	P0764Z0422	HEX NUT M10-1.5
423	P0764Z0423	ADJUSTING LEVER
424	P0764Z0424	FLAT WASHER 10MM
425	P0764Z0425	HEX BOLT M10-1.5 X 35
426	P0764Z0426	ADJUSTING SHAFT
427	P0764Z0427	LOCK NUT M10-1.5
428	P0764Z0428	EYE BOLT M10-1.5 X 60
429	P0764Z0429	SHAFT
430	P0764Z0430	TEMPERATURE CORD

Main Blade Arbor

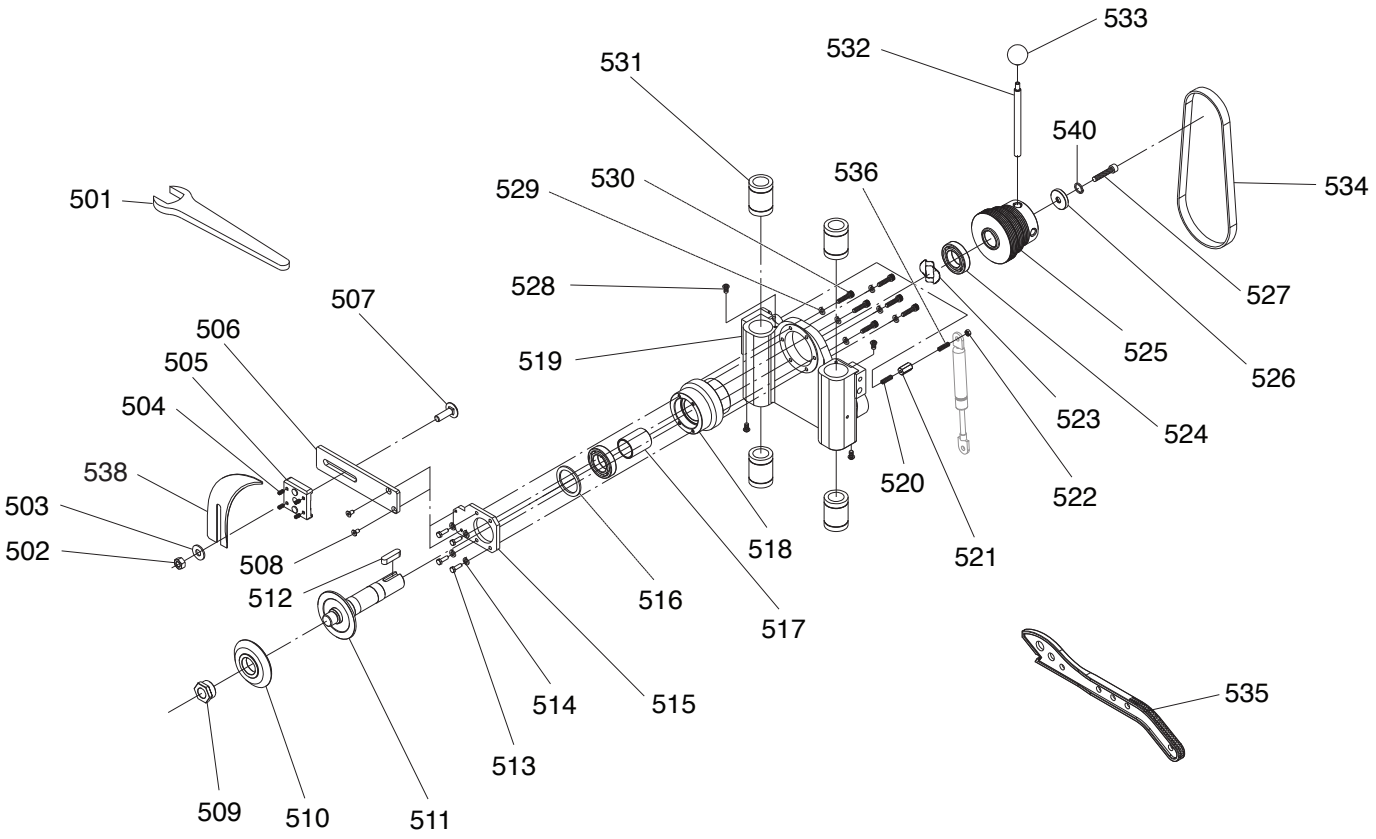

REF	PART #	DESCRIPTION
502	P0764Z0502	HEX NUT M12-1.75
503	P0764Z0503	FENDER WASHER 12MM
504	P0764Z0504	SET SCREW M5-.8 X 10
505	P0764Z0505	FIX BLOCK
506	P0764Z0506	FIX BLOCK BRACKET
507	P0764Z0507	CARRIAGE BOLT M12-1.75 X 40
508	P0764Z0508	FLAT HD SCR M6-1 X 16
509	P0764Z0509	ARBOR NUT M24-3
510	P0764Z0510	MAIN BLADE FLANGE
511	P0764Z0511	MAIN BLADE ARBOR 25.4MM
512	P0764Z0512	KEY 10 X 8 X 40
513	P0764Z0513	HEX BOLT M6-1 X 20
514	P0764Z0514	LOCK WASHER 6MM
515	P0764Z0515	ARBOR PLATE
516	P0764Z0516	SPACER
517	P0764Z0517	BUSHING
518	P0764Z0518	BEARING HOUSING
519	P0764Z0519	ARBOR SUPPORT BRACKET
520	P0764Z0520	SET SCREW M8-1.25 X 25

REF	PART #	DESCRIPTION
521	P0764Z0521	STANDOFF HEX FF M6-1
522	P0764Z0522	LOCK NUT M6-1
523	P0764Z0523	WAVE WASHER 47 X 60MM
524	P0764Z0524	BALL BEARING 6007LLB
525	P0764Z0525	MAIN BLADE PULLEY
526	P0764Z0526	PULLEY FLAT WASHER 10MM
527	P0764Z0527	CAP SCREW M10-1.5 X 25
528	P0764Z0528	FLANGE BOLT M6-1 X 12
529	P0764Z0529	LOCK WASHER 6MM
530	P0764Z0530	CAP SCREW M6-1 X 30
531	P0764Z0531	BALL BEARING LM30UU
532	P0764Z0532	LEVER SHAFT M8-1.25 X 15, 12 X 166
533	P0764Z0533	BALL KNOB M8-1.25
534	P0764Z0534	V-BELT 5V X 31.5 RIBBED
535	P0764Z0535	PUSH STICK
536	P0764Z0536	SET SCREW M6-1 X 25
538	P0764Z0538	RIVING KNIFE 300-350MM
540	P0764Z0540	LOCK WASHER 10MM

Blade Tilt System

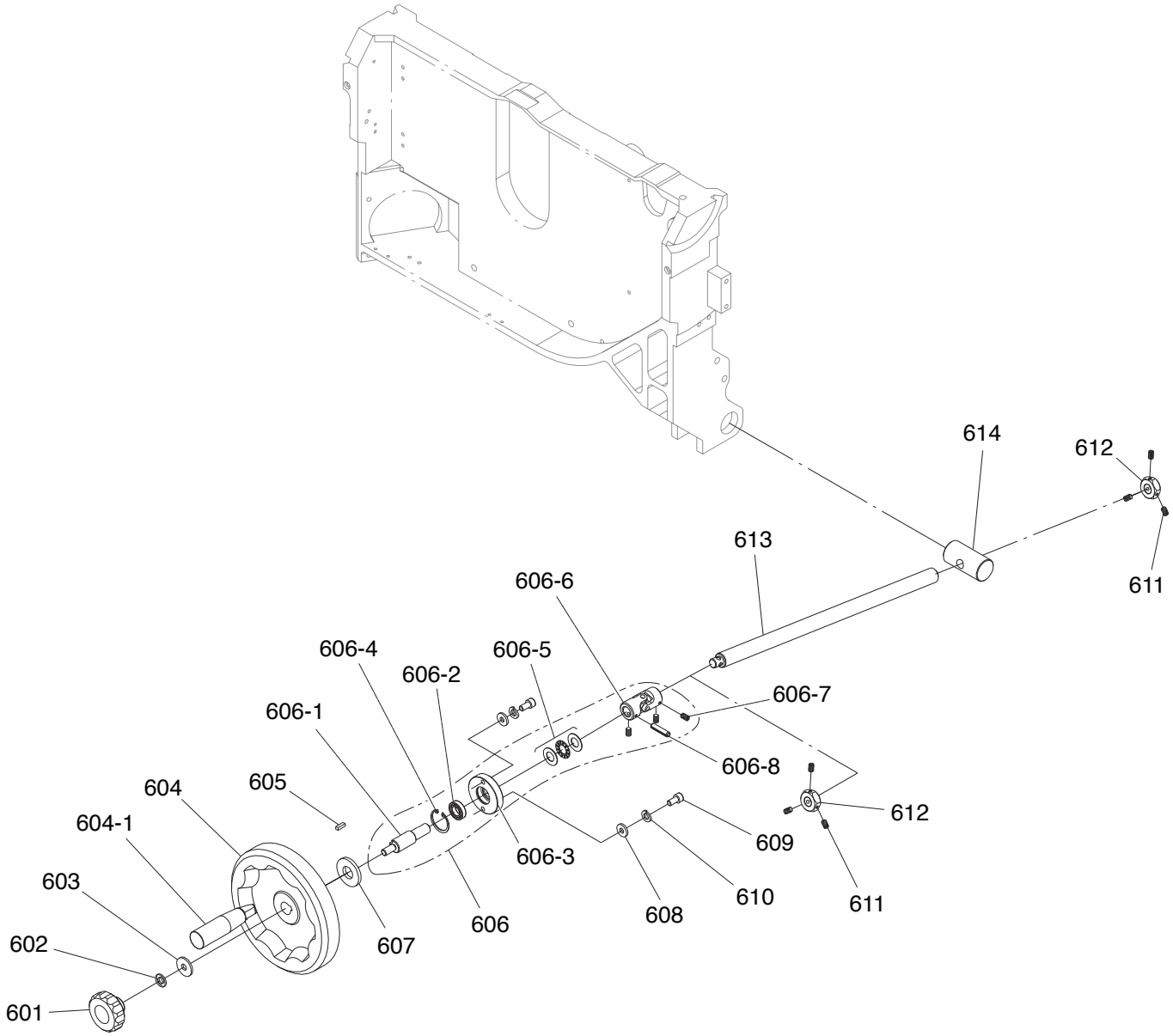

REF	PART #	DESCRIPTION
601	P0764Z0601	LOCK KNOB M10-1.5
602	P0764Z0602	LOCK WASHER 10MM
603	P0764Z0603	FENDER WASHER 10MM
604	P0764Z0604	HANDWHEEL TYPE-12 203D X 10B-K X M6-1
604-1	P0764Z0604-1	FOLDING HANDLE 110L, M6-1 X 12
605	P0764Z0605	KEY 7 X 7 X 20
606	P0764Z0606	TILT HANDWHEEL SHAFT ASSY
606-1	P0764Z0606-1	HANDWHEEL SHAFT
606-2	P0764Z0606-2	BALL BEARING 6902LLU
606-3	P0764Z0606-3	SHAFT BRACKET
606-4	P0764Z0606-4	EXT RETAINING RING 28MM
606-5	P0764Z0606-5	THRUST BEARING NTB1528+AS

REF	PART #	DESCRIPTION
606-6	P0764Z0606-6	UNIVERSAL JOINT
606-7	P0764Z0606-7	SET SCREW M6-1 X 6
606-8	P0764Z0606-8	ROLL PIN 6 X 26
607	P0764Z0607	SPACER
608	P0764Z0608	FLAT WASHER 8MM
609	P0764Z0609	CAP SCREW M8-1.25 X 20
610	P0764Z0610	LOCK WASHER 8MM
611	P0764Z0611	SET SCREW M6-1 X 6
612	P0764Z0612	LOCK COLLAR
613	P0764Z0613	TILT LEADSCREW
614	P0764Z0614	TILT LEADSCREW NUT

Blade Elevation System

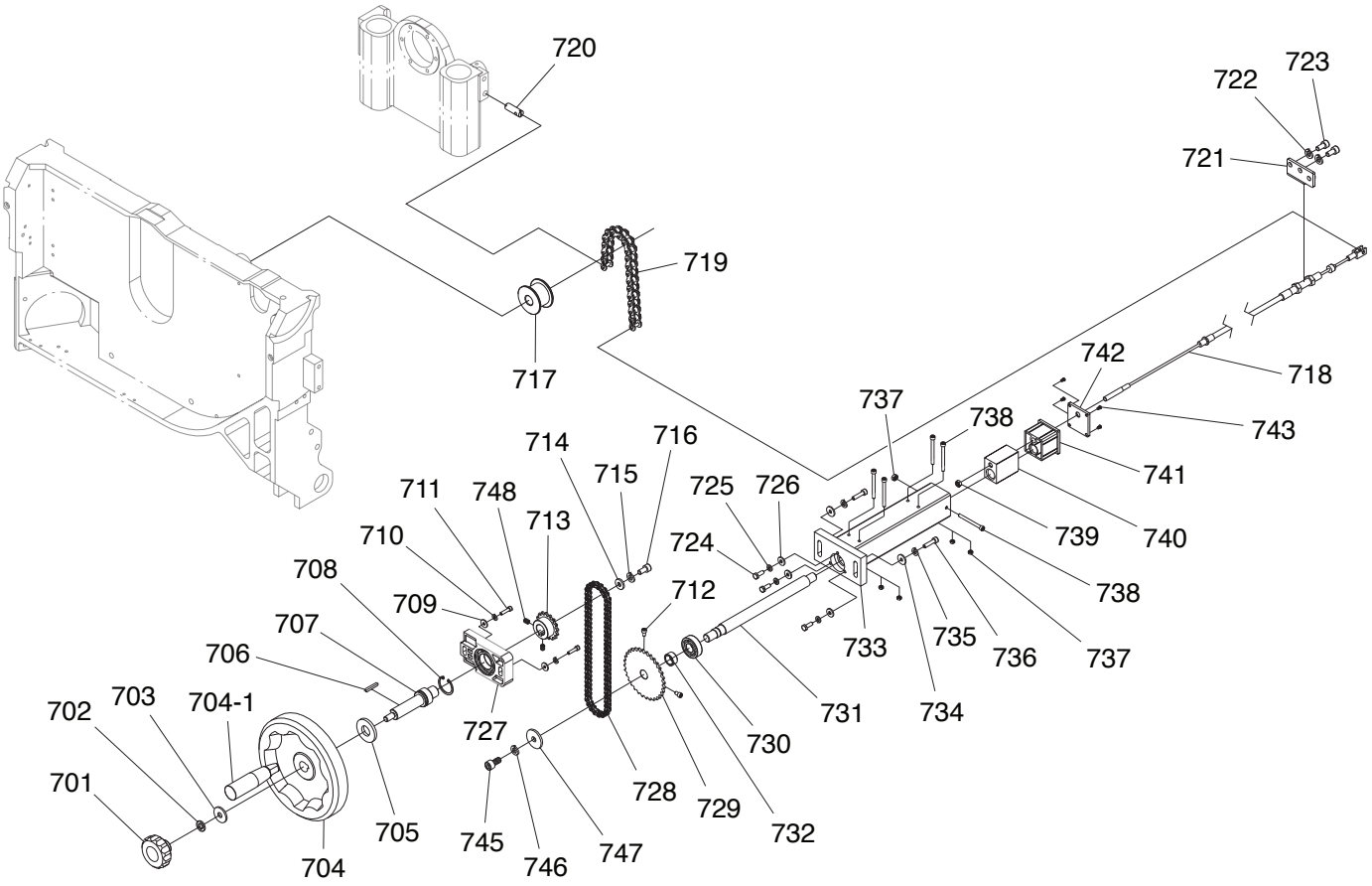

REF	PART #	DESCRIPTION
701	P0764Z0701	LOCK KNOB M10-1.5
702	P0764Z0702	LOCK WASHER 10MM
703	P0764Z0703	FENDER WASHER 10MM
704	P0764Z0704	HANDWHEEL TYPE-12 203D X 10B-K X M6-1
704-1	P0764Z0704-1	FOLDING HANDLE 110L, M6-1 X 12
705	P0764Z0705	SPACER
706	P0764Z0706	KEY 7 X 7 X 20
707	P0764Z0707	SPROCKET SHAFT (UPPER)
708	P0764Z0708	INT RETAINING RING 30MM
709	P0764Z0709	FLAT WASHER 8MM
710	P0764Z0710	LOCK WASHER 8MM
711	P0764Z0711	CAP SCREW M8-1.25 X 35
712	P0764Z0712	CAP SCREW M6-1 X 12
713	P0764Z0713	SPROCKET 16T (UPPER)
714	P0764Z0714	FENDER WASHER 8MM
715	P0764Z0715	LOCK WASHER 8MM
716	P0764Z0716	CAP SCREW M8-1.25 X 20
717	P0764Z0717	SHAFT
718	P0764Z0718	CONNECTING ROD
719	P0764Z0719	CHAIN RS50
720	P0764Z0720	CHAIN MOUNTING PIN
721	P0764Z0721	CONNECTING ROD PLATE
722	P0764Z0722	LOCK WASHER 8MM
723	P0764Z0723	CAP SCREW M8-1.25 X 20

REF	PART #	DESCRIPTION
724	P0764Z0724	HEX BOLT M6-1 X 16
725	P0764Z0725	LOCK WASHER 6MM
726	P0764Z0726	FLAT WASHER 6MM
727	P0764Z0727	SPROCKET SHAFT BRACKET (UPPER)
728	P0764Z0728	CHAIN RS35
729	P0764Z0729	SPROCKET 32T (LOWER)
730	P0764Z0730	BALL BEARING 6003LLU
731	P0764Z0731	SPROCKET SHAFT (LOWER)
732	P0764Z0732	BUSHING
733	P0764Z0733	SPROCKET SHAFT BRACKET (LOWER)
734	P0764Z0734	FLAT WASHER 8MM
735	P0764Z0735	LOCK WASHER 8MM
736	P0764Z0736	CAP SCREW M8-1.25 X 30
737	P0764Z0737	LOCK NUT M6-1
738	P0764Z0738	CAP SCREW M6-1 X 60
739	P0764Z0739	HEX NUT M8-1.25
740	P0764Z0740	CONNECTING ROD BLOCK
741	P0764Z0741	CONNECTING ROD BLOCK COVER
742	P0764Z0742	CONNECTING ROD BLOCK PLATE
743	P0764Z0743	TAP SCREW M4 X 10
745	P0764Z0745	CAP SCREW M8-1.25 X 16
746	P0764Z0746	LOCK WASHER 8MM
747	P0764Z0747	FENDER WASHER 8MM
748	P0764Z0748	SET SCREW M6-1 X 8

Scoring Blade Arbor

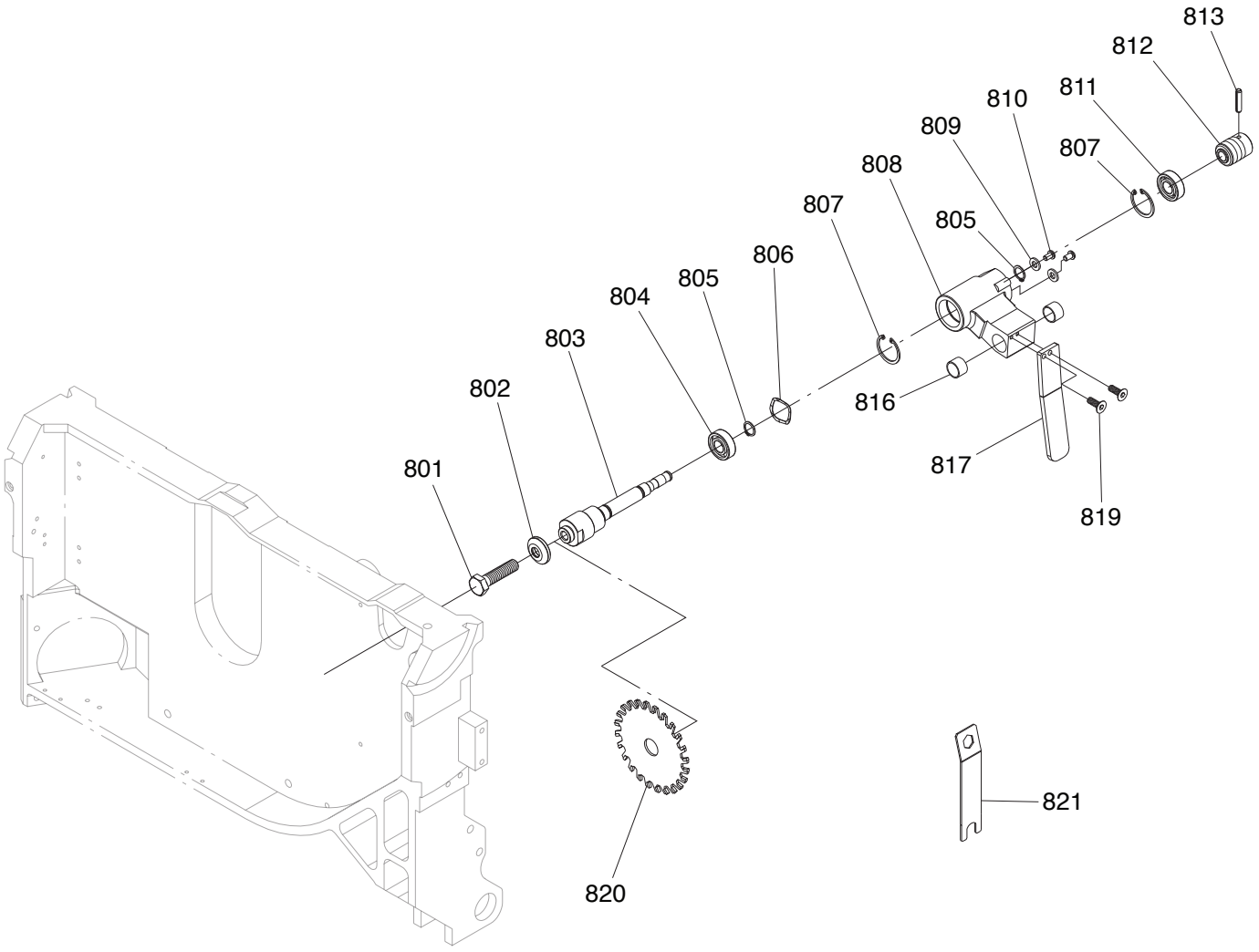

REF	PART #	DESCRIPTION
801	P0764Z0801	HEX BOLT M12-1.75 X 20
802	P0764Z0802	SCORING BLADE FLANGE
803	P0764Z0803	SCORING BLADE ARBOR
804	P0764Z0804	BALL BEARING 6003LLB
805	P0764Z0805	INT RETAINING RING 15MM
806	P0764Z0806	WAVE WASHER 26 X 34MM
807	P0764Z0807	INT RETAINING RING 35MM
808	P0764Z0808	SCORING BLADE ARBOR HOUSING
809	P0764Z0809	FLAT WASHER 6MM

REF	PART #	DESCRIPTION
810	P0764Z0810	BUTTON HD CAP SCR M6-1 X 16
811	P0764Z0811	BALL BEARING 6202LLB
812	P0764Z0812	SCORING BLADE PULLEY
813	P0764Z0813	ROLL PIN 5 X 25
816	P0764Z0816	BUSHING DU-2015
817	P0764Z0817	ARBOR HOUSING MOUNTING PLATE
819	P0764Z0819	FLAT HD SCR M5-.8 X 12
820	P0764Z0820	SCORING BLADE 4-3/4" X 20MM
821	P0764Z0821	SCORING BLADE ARBOR WRENCH

Scoring Blade Adjustment System

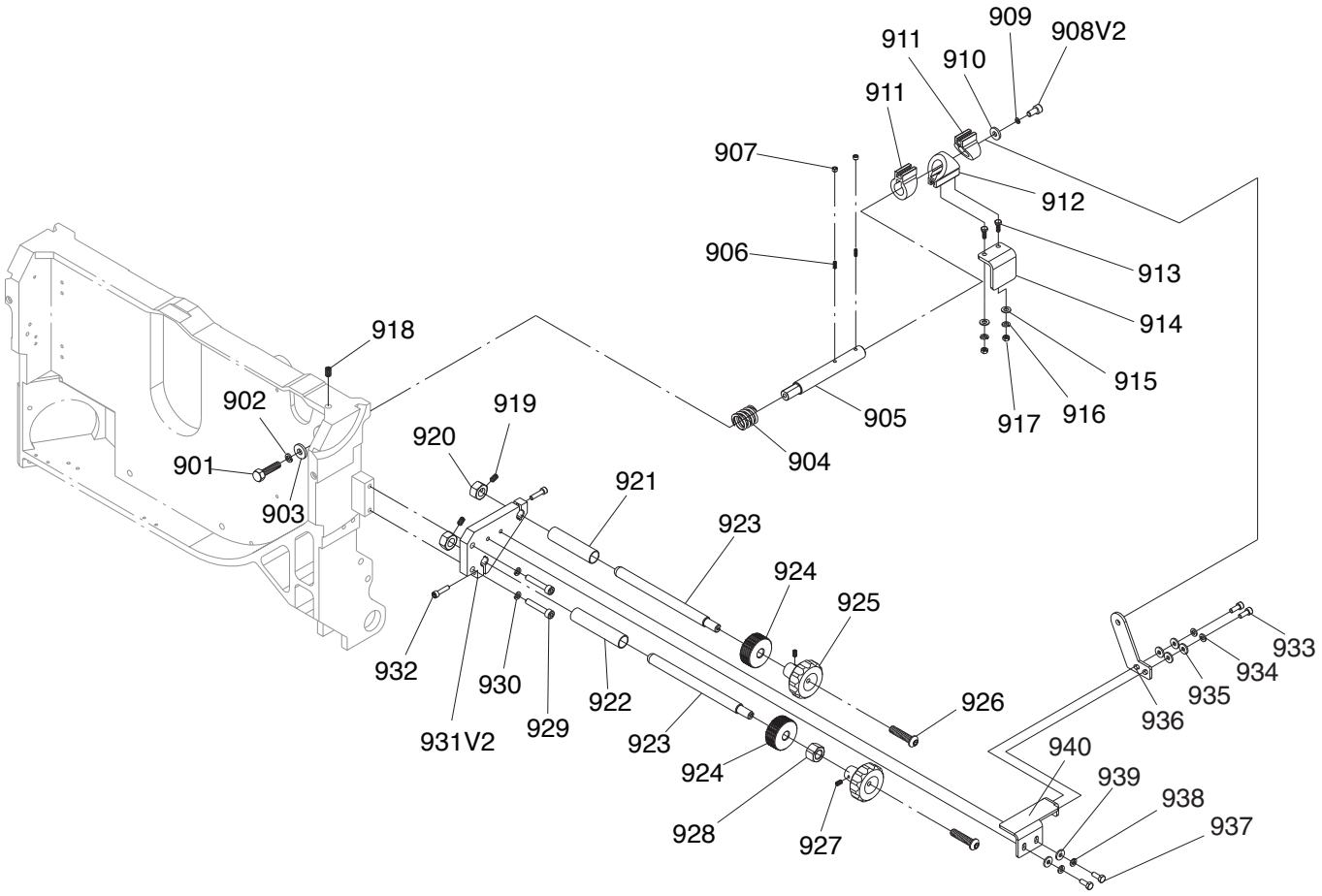

REF	PART #	DESCRIPTION
901	P0764Z0901	HEX BOLT M8-1.25 X 16
902	P0764Z0902	LOCK WASHER 8MM
903	P0764Z0903	FENDER WASHER 8MM
904	P0764Z0904	COMPRESSION SPRING
905	P0764Z0905	SHAFT
906	P0764Z0906	SET SCREW M6-1 X 12
907	P0764Z0907	THREADED SLEEVE
908V2	P0764Z0908V2	CAP SCREW M8-1.25 X 20
909	P0764Z0909	LOCK WASHER 8MM
910	P0764Z0910	FENDER WASHER 8MM
911	P0764Z0911	SHAFT SLEEVE (SINGLE ANGLE)
912	P0764Z0912	SHAFT SLEEVE (DOUBLE ANGLE)
913	P0764Z0913	HEX BOLT M6-1 X 16
914	P0764Z0914	L-BRACKET
915	P0764Z0915	FLAT WASHER 6MM
916	P0764Z0916	LOCK WASHER 6MM
917	P0764Z0917	HEX NUT M6-1
918	P0764Z0918	SET SCREW M8-1.25 X 10
919	P0764Z0919	SET SCREW M6-1 X 5
920	P0764Z0920	HEX NUT M6-1 W/THREADED HOLE

REF	PART #	DESCRIPTION
921	P0764Z0921	TILT BUSHING
922	P0764Z0922	ELEVATION BUSHING
923	P0764Z0923	TILT ADJUSTMENT LEADSCREW
924	P0764Z0924	KNURLED LOCK COLLAR
925	P0764Z0925	ADJUSTMENT KNOB
926	P0764Z0926	BUTTON HD CAP SCR M6-1 X 30
927	P0764Z0927	SET SCREW M5-.8 X 10
928	P0764Z0928	HEX NUT M16-2
929	P0764Z0929	CAP SCREW M8-1.25 X 35
930	P0764Z0930	LOCK WASHER 8MM
931V2	P0764Z0931V2	LEADSCREW BRACKET V2.05.18
932	P0764Z0932	CAP SCREW M6-1 X 25
933	P0764Z0933	CAP SCREW M6-1 X 16
934	P0764Z0934	LOCK WASHER 6MM
935	P0764Z0935	FLAT WASHER 6MM
936	P0764Z0936	FIXED PLATE
937	P0764Z0937	HEX BOLT M6-1 X 16
938	P0764Z0938	LOCK WASHER 6MM
939	P0764Z0939	FLAT WASHER 6MM
940	P0764Z0940	LEADSCREW BRACKET PLATE

Scoring Blade Motor

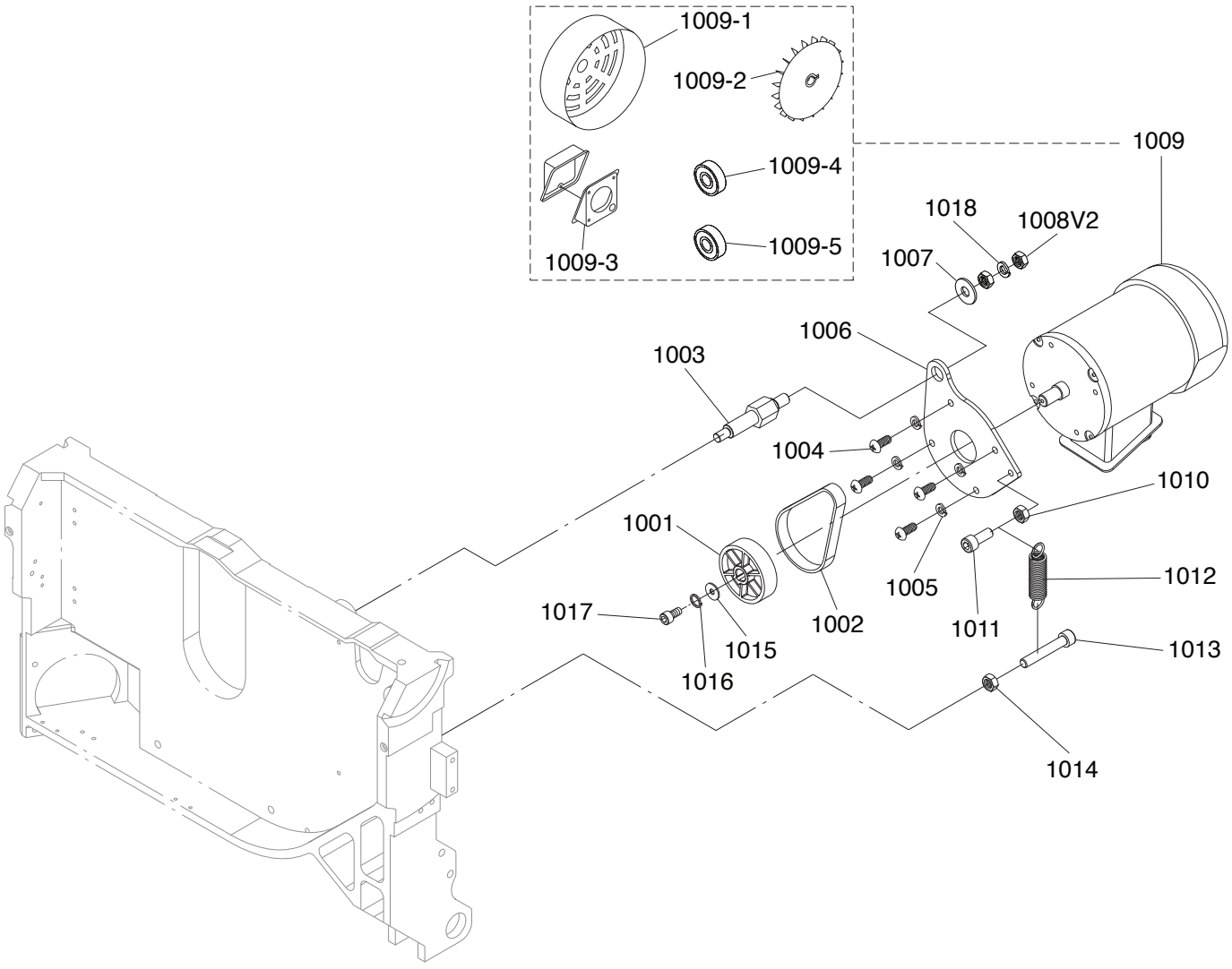

REF	PART #	DESCRIPTION
1001	P0764Z1001	PULLEY
1002	P0764Z1002	BELT 18W X 380L
1003	P0764Z1003	SHAFT
1004	P0764Z1004	BUTTON HD CAP SCR M8-1.25 X 20
1005	P0764Z1005	LOCK WASHER 8MM
1006	P0764Z1006	MOTOR MOUNT PLATE
1007	P0764Z1007	FENDER WASHER 14MM
1008V2	P0764Z1008V2	HEX NUT M14-2 V2.10.19
1009	P0764Z1009	SCORING MOTOR 1HP 220V/440V 3-PH
1009-1	P0764Z1009-1	MOTOR FAN COVER
1009-2	P0764Z1009-2	MOTOR FAN
1009-3	P0764Z1009-3	MOTOR JUNCTION BOX

REF	PART #	DESCRIPTION
1009-4	P0764Z1009-4	BALL BEARING 6203ZZ (FRONT)
1009-5	P0764Z1009-5	BALL BEARING 6202ZZ (REAR)
1010	P0764Z1010	HEX NUT M10-1.5
1011	P0764Z1011	CAP SCREW M10-1.5 X 25
1012	P0764Z1012	EXTENSION SPRING 2 X 15.8 X 60
1013	P0764Z1013	CAP SCREW M10-1.5 X 70
1014	P0764Z1014	HEX NUT M10-1.5
1015	P0764Z1015	FENDER WASHER 6MM
1016	P0764Z1016	LOCK WASHER 6MM
1017	P0764Z1017	CAP SCREW M6-1 X 16
1018	P0764Z1018	LOCK WASHER 14MM

Crosscut Swing-Arm

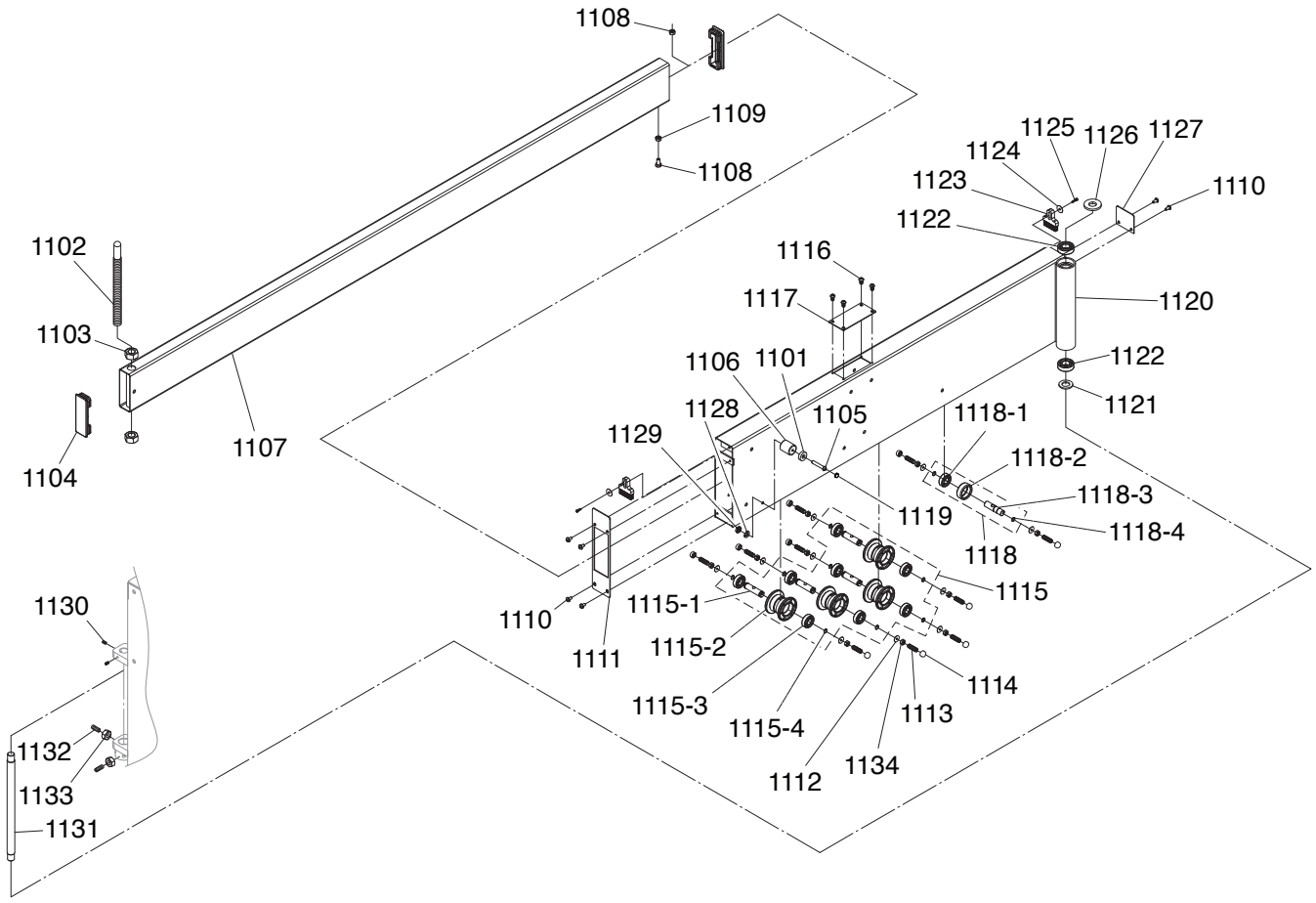

REF	PART #	DESCRIPTION
1101	P0764Z1101	MAGNETIC WASHER 5MM
1102	P0764Z1102	CROSSCUT FRAME PIVOT ROD M20-2.5 X 220
1103	P0764Z1103	HEX NUT M20-2.5
1104	P0764Z1104	TUBE END CAP
1105	P0764Z1105	FLAT HD SCR M5-.8 X 55
1106	P0764Z1106	SLEEVE 22MM
1107	P0764Z1107	SLIDING TUBE
1108	P0764Z1108	HEX BOLT M8-1.25 X 20
1109	P0764Z1109	HEX NUT M8-1.25
1110	P0764Z1110	BUTTON HD CAP SCR M6-1 X 10
1111	P0764Z1111	SWING ARM END CAP (LH)
1112	P0764Z1112	FLAT WASHER 8MM
1113	P0764Z1113	SET SCREW M8-1.25 X 25
1114	P0764Z1114	SET SCREW PROTECTIVE CAP 13MM
1115	P0764Z1115	TUBE ROLLER ASSEMBLY (LOWER)
1115-1	P0764Z1115-1	ROLLER SHAFT
1115-2	P0764Z1115-2	ROLLER
1115-3	P0764Z1115-3	BALL BEARING 6202ZZ
1115-4	P0764Z1115-4	EXT RETAINING RING 15MM
1116	P0764Z1116	BUTTON HD CAP SCR M5-.8 X 8
1117	P0764Z1117	SWING ARM TOP PLATE

REF	PART #	DESCRIPTION
1118	P0764Z1118	TUBE ROLLER ASSEMBLY (UPPER)
1118-1	P0764Z1118-1	BALL BEARING 6202ZZ
1118-2	P0764Z1118-2	ROLLER
1118-3	P0764Z1118-3	ROLLER SHAFT
1118-4	P0764Z1118-4	EXT RETAINING RING 15MM
1119	P0764Z1119	SCREW CAP
1120	P0764Z1120	SWING ARM
1121	P0764Z1121	FLAT WASHER 20MM
1122	P0764Z1122	BALL BEARING 6004ZZ
1123	P0764Z1123	BRUSH
1124	P0764Z1124	FLAT WASHER 6MM
1125	P0764Z1125	CAP SCREW M6-1 X 20
1126	P0764Z1126	FLAT WASHER 20MM
1127	P0764Z1127	SWING ARM END CAP (RH)
1128	P0764Z1128	LOCK WASHER 5MM
1129	P0764Z1129	HEX NUT M5-.8
1130	P0764Z1130	SET SCREW M10-1.5 X 10
1131	P0764Z1131	PIVOT SHAFT
1132	P0764Z1132	SET SCREW M10-1.5 X 20
1133	P0764Z1133	HEX NUT M10-1.5
1134	P0764Z1134	HEX NUT M8-1.25

Crosscut Table

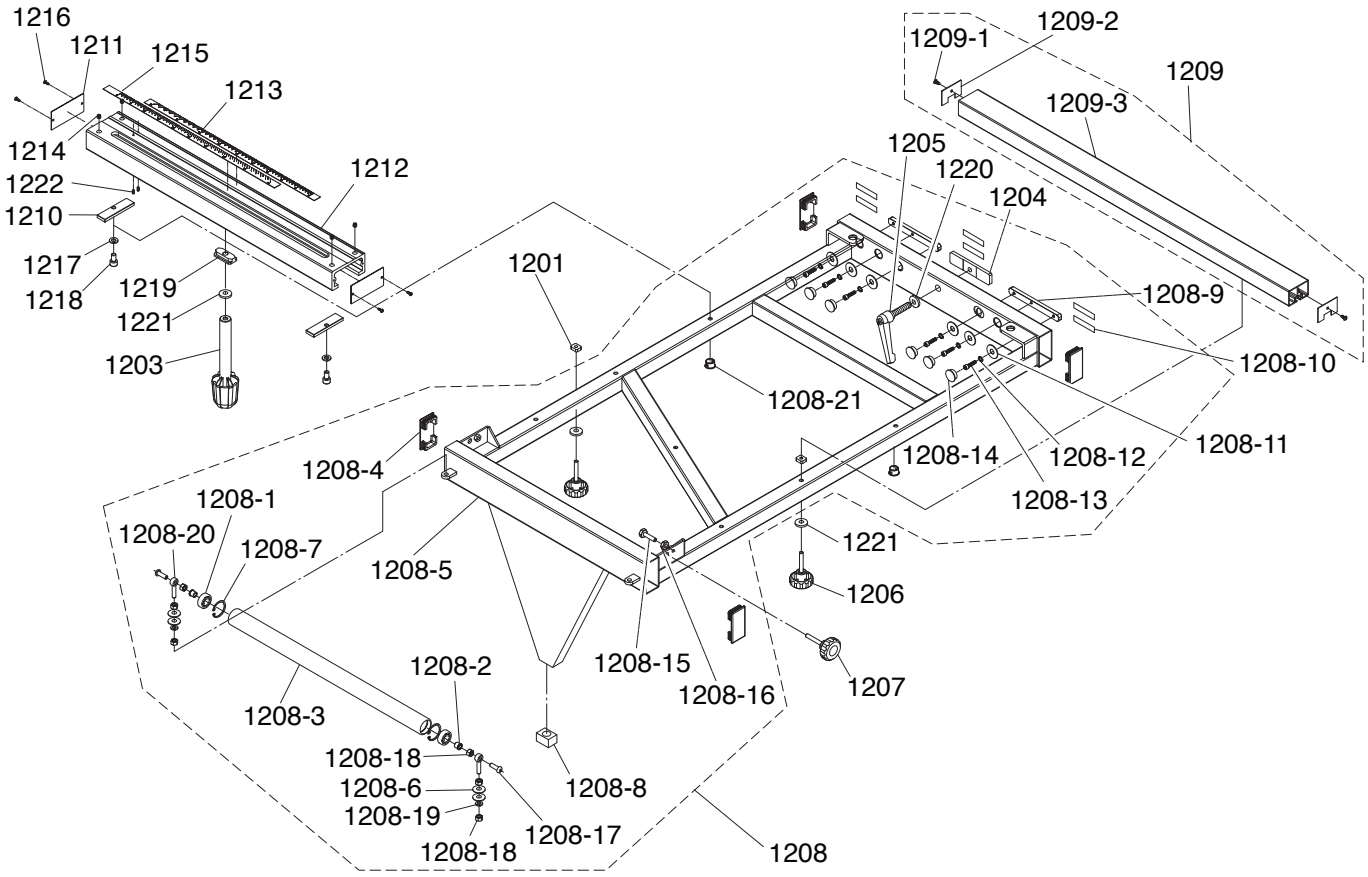

REF	PART #	DESCRIPTION
1201	P0764Z1201	T-SLOT NUT M8-1.25
1203	P0764Z1203	FENCE LOCK HANDLE
1204	P0764Z1204	FRAME T-SLOT CLAMP BLOCK
1205	P0764Z1205	ADJUSTMENT HANDLE M12-1.75 X 55
1206	P0764Z1206	KNOB BOLT M8-1.25 X 50
1207	P0764Z1207	KNOB BOLT M8-1.25 X 50
1208	P0764Z1208	CROSSCUT TABLE ASSEMBLY
1208-1	P0764Z1208-1	BALL BEARING 6201ZZ
1208-2	P0764Z1208-2	BUSHING
1208-3	P0764Z1208-3	ROLLER
1208-4	P0764Z1208-4	FRAME END CAP
1208-5	P0764Z1208-5	CROSSCUT TABLE FRAME
1208-6	P0764Z1208-6	FLAT WASHER 8MM
1208-7	P0764Z1208-7	INT RETAINING RING 32MM
1208-8	P0764Z1208-8	CROSSCUT FRAME PIVOT BLOCK
1208-9	P0764Z1208-9	T-SLOT ALIGNMENT PLATE
1208-10	P0764Z1208-10	CUSHION PAD 55MM
1208-11	P0764Z1208-11	FLAT WASHER 6MM
1208-12	P0764Z1208-12	LOCK WASHER 6MM
1208-13	P0764Z1208-13	BUTTON HD CAP SCR M6-1 X 16
1208-14	P0764Z1208-14	PROTECTIVE CAP
1208-15	P0764Z1208-15	HEX BOLT M8-1.25 X 30
1208-16	P0764Z1208-16	HEX NUT M8-1.25

REF	PART #	DESCRIPTION
1208-17	P0764Z1208-17	BUTTON HD CAP SCR M8-1.25 X 25
1208-18	P0764Z1208-18	HEX NUT M8-1.25
1208-19	P0764Z1208-19	LOCK WASHER 8MM
1208-20	P0764Z1208-20	SOLID ROD END M8-1.25 X 40
1208-21	P0764Z1208-21	FRAME PLUG HP-16
1209	P0764Z1209	FRAME LONG BRACE ASSEMBLY
1209-1	P0764Z1209-1	TAP SCREW #8 X 3/8
1209-2	P0764Z1209-2	BRACE END CAP
1209-3	P0764Z1209-3	FRAME LONG BRACE
1210	P0764Z1210	BRACE ALIGNMENT PLATE
1211	P0764Z1211	BRACE END CAP
1212	P0764Z1212	FRAME SHORT BRACE
1213	P0764Z1213	ANGLE SCALE (RH)
1214	P0764Z1214	SET SCREW M5-.8 X 10
1215	P0764Z1215	ANGLE SCALE (LH)
1216	P0764Z1216	TAP SCREW #8 X 3/8
1217	P0764Z1217	LOCK WASHER 8MM
1218	P0764Z1218	CAP SCREW M8-1.25 X 25
1219	P0764Z1219	BRACE T-SLOT LOCK CLAMP
1220	P0764Z1220	FLAT WASHER 12MM
1221	P0764Z1221	FLAT WASHER 8MM
1222	P0764Z1222	SET SCREW M5-.8 X 5

Crosscut Fence

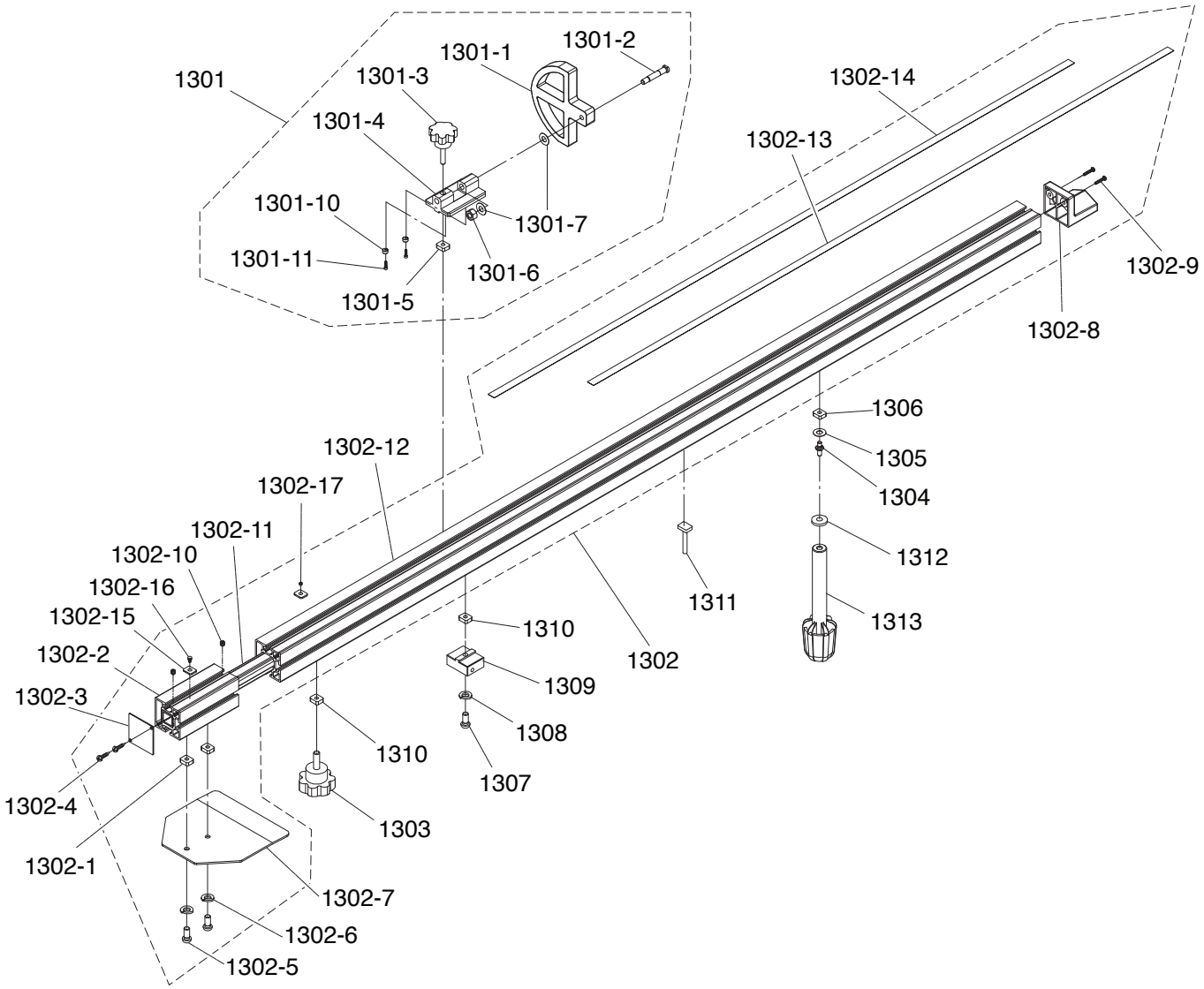

REF	PART #	DESCRIPTION
1301	P0764Z1301	FLIP STOP ASSEMBLY
1301-1	P0764Z1301-1	FLIP STOP
1301-2	P0764Z1301-2	PIVOT SHAFT
1301-3	P0764Z1301-3	KNOB BOLT M8-1.25 X 40
1301-4	P0764Z1301-4	FLIP STOP BRACKET
1301-5	P0764Z1301-5	T-SLOT NUT M8-1.25
1301-6	P0764Z1301-6	LOCK NUT M10-1.5
1301-7	P0764Z1301-7	FLAT WASHER 10MM (COPPER)
1301-10	P0764Z1301-10	SLEEVE
1301-11	P0764Z1301-11	CAP SCREW M3-.5 X 12
1302	P0764Z1302	CROSSCUT FENCE ASSEMBLY
1302-1	P0764Z1302-1	T-SLOT NUT M8-1.25
1302-2	P0764Z1302-2	CROSSCUT EXTENSION FENCE
1302-3	P0764Z1302-3	EXTENSION FENCE END CAP
1302-4	P0764Z1302-4	TAP SCREW M4 X 10
1302-5	P0764Z1302-5	BUTTON HD CAP SCR M8-1.25 X 16
1302-6	P0764Z1302-6	LOCK WASHER 8MM
1302-7	P0764Z1302-7	STOCK SUPPORT PLATE
1302-8	P0764Z1302-8	CROSSCUT MAIN FENCE END CAP
1302-9	P0764Z1302-9	PHLP HD SCR M4-.7 X 10

REF	PART #	DESCRIPTION
1302-10	P0764Z1302-10	SET SCREW M6-1 X 6
1302-11	P0764Z1302-11	EXTENSION FENCE CONNECTOR ROD
1302-12	P0764Z1302-12	CROSSCUT MAIN FENCE
1302-13	P0764Z1302-13	FENCE SCALE 3"-72"
1302-14	P0764Z1302-14	FENCE SCALE 74"-134"
1302-15	P0764Z1302-15	T-SLOT NUT M5-.8 (THIN)
1302-16	P0764Z1302-16	CAP SCREW M5-.8 X 6
1302-17	P0764Z1302-17	SET SCREW M5-.8 X 5
1303	P0764Z1303	KNOB BOLT M8-1.25 X 25
1304	P0764Z1304	FENCE PIVOT PIN
1305	P0764Z1305	FLAT WASHER 8MM (FIBER)
1306	P0764Z1306	T-SLOT NUT M8-1.25
1307	P0764Z1307	CAP SCREW M8-1.25 X 35
1308	P0764Z1308	LOCK WASHER 8MM
1309	P0764Z1309	FLIP STOP CLAMP BLOCK
1310	P0764Z1310	T-SLOT NUT M8-1.25
1311	P0764Z1311	T-SLOT BOLT M8-1.25 X 35
1312	P0764Z1312	FENDER WASHER 8MM
1313	P0764Z1313	FENCE LOCK HANDLE

Rip Fence

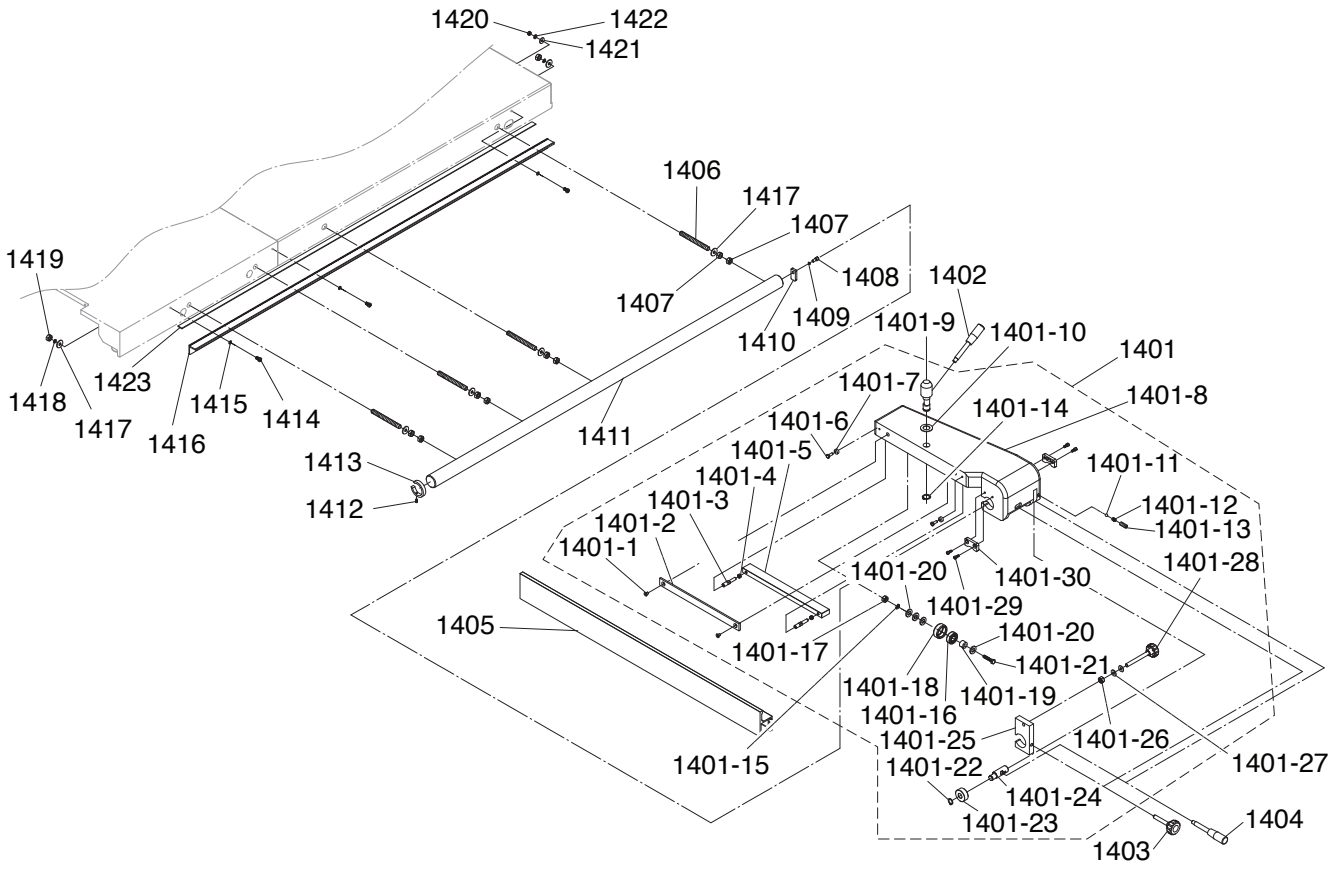

REF	PART #	DESCRIPTION
1401	P0764Z1401	RIP FENCE ASSEMBLY
1401-1	P0764Z1401-1	FLAT HD SCR M6-1 X 16
1401-2	P0764Z1401-2	FENCE T-SLOT PLATE
1401-3	P0764Z1401-3	THREADED SHAFT M8-1.25 X 16
1401-4	P0764Z1401-4	LOCK NUT M8-1.25
1401-5	P0764Z1401-5	ALIGNMENT PLATE
1401-6	P0764Z1401-6	HEX BOLT M6-1 X 16
1401-7	P0764Z1401-7	ECCENTRIC RING
1401-8	P0764Z1401-8	RIP FENCE BODY
1401-9	P0764Z1401-9	ECCENTRIC SHAFT
1401-10	P0764Z1401-10	FLAT WASHER 20MM
1401-11	P0764Z1401-11	STEEL BALL 8MM
1401-12	P0764Z1401-12	COMPRESSION SPRING
1401-13	P0764Z1401-13	SET SCREW M10-1.5 X 10
1401-14	P0764Z1401-14	EXT RETAINING RING 20MM
1401-15	P0764Z1401-15	LOCK WASHER 8MM
1401-16	P0764Z1401-16	BALL BEARING 6202ZZ
1401-17	P0764Z1401-17	HEX NUT M8-1.25
1401-18	P0764Z1401-18	SPACER
1401-19	P0764Z1401-19	BUSHING
1401-20	P0764Z1401-20	FLAT WASHER 8MM
1401-21	P0764Z1401-21	HEX BOLT M8-1.25 X 35
1401-22	P0764Z1401-22	EXT RETAINING RING 15MM
1401-23	P0764Z1401-23	SPACER
1401-24	P0764Z1401-24	RAIL LOCK SHAFT
1401-25	P0764Z1401-25	FENCE RAIL BRACKET
1401-26	P0764Z1401-26	LOCK NUT M10-1.5

REF	PART #	DESCRIPTION
1401-27	P0764Z1401-27	FLAT WASHER 10MM
1401-28	P0764Z1401-28	KNOB BOLT M10-1.5 X 110
1401-29	P0764Z1401-29	CAP SCREW M6-1 X 10
1401-30	P0764Z1401-30	RAIL WIPER
1402	P0764Z1402	FENCE LOCK LEVER
1403	P0764Z1403	KNOB BOLT M10-1.5 X 55
1404	P0764Z1404	RAIL LOCK LEVER
1405	P0764Z1405	FENCE 39-3/8" (ALUMINUM)
1406	P0764Z1406	STUD-FT M12-1.75 X 115
1407	P0764Z1407	HEX NUT M12-1.75
1408	P0764Z1408	CAP SCREW M8-1.25 X 16
1409	P0764Z1409	LOCK WASHER 8MM
1410	P0764Z1410	RAIL END PLATE (RH)
1411	P0764Z1411	RIP FENCE RAIL
1412	P0764Z1412	SET SCREW M6-1 X 10
1413	P0764Z1413	RAIL STOP RING
1414	P0764Z1414	BUTTON HD CAP SCR M6-1 X 12
1415	P0764Z1415	FLAT WASHER 6MM
1416	P0764Z1416	L-BRACKET
1417	P0764Z1417	FLAT WASHER 12MM
1418	P0764Z1418	LOCK WASHER 12MM
1419	P0764Z1419	HEX NUT M12-1.75
1420	P0764Z1420	HEX NUT M6-1
1421	P0764Z1421	FLAT WASHER 6MM
1422	P0764Z1422	LOCK WASHER 6MM
1423	P0764Z1423	RIP FENCE SCALE

Sliding Table

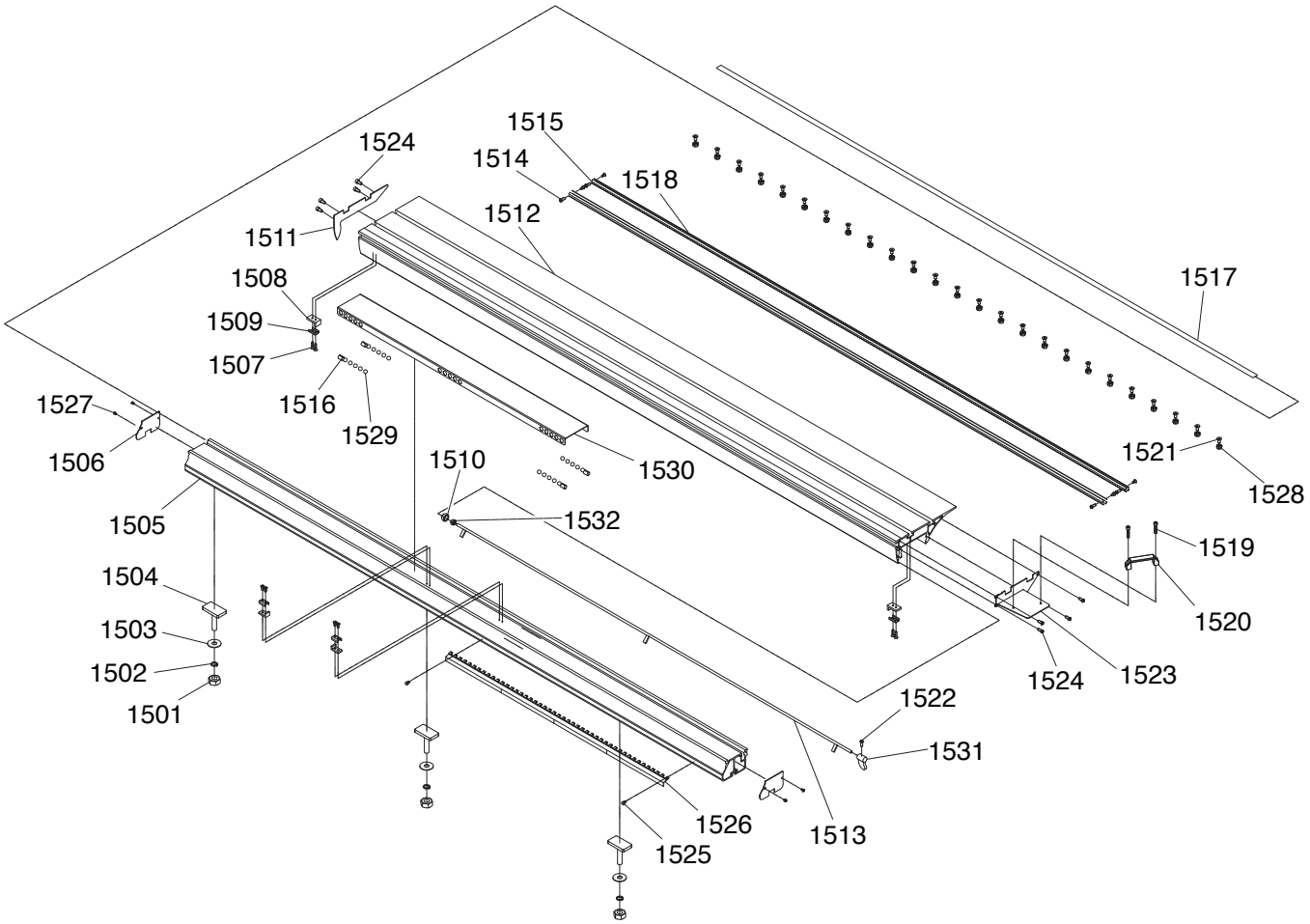

REF	PART #	DESCRIPTION
1501	P0764Z1501	HEX NUT M12-1.75
1502	P0764Z1502	LOCK WASHER 12MM
1503	P0764Z1503	FLAT WASHER 12MM
1504	P0764Z1504	T-SLOT BOLT M12-1.75 X 50
1505	P0764Z1505	SLIDING TABLE BASE
1506	P0764Z1506	SLIDING TABLE BASE END CAP
1507	P0764Z1507	FLAT HD SCR M6-1 X 30
1508	P0764Z1508	STOP BLOCK (RUBBER)
1509	P0764Z1509	STOP BLOCK BRACKET
1510	P0764Z1510	PROTECTIVE CAP
1511	P0764Z1511	SLIDING TABLE END CAP (REAR)
1512	P0764Z1512	SLIDING TABLE
1513	P0764Z1513	LOCK ROD
1514	P0764Z1514	BUTTON HD CAP SCR M6-1 X 10
1515	P0764Z1515	STEEL RAIL
1516	P0764Z1516	COTTON PAD

REF	PART #	DESCRIPTION
1517	P0764Z1517	COVER STRIP
1518	P0764Z1518	ADHESIVE STRIP
1519	P0764Z1519	CAP SCREW M8-1.25 X 12
1520	P0764Z1520	SLIDING TABLE HANDLE
1521	P0764Z1521	FLAT HD CAP SCR M10-1.5 X 20
1522	P0764Z1522	BUTTON HD CAP SCR M5-.8 X 10
1523	P0764Z1523	SLIDING TABLE END CAP (FRONT)
1524	P0764Z1524	BUTTON HD CAP SCR M6-1 X 12
1525	P0764Z1525	BUTTON HD CAP SCR M6-1 X 16
1526	P0764Z1526	NOTCHED LOCK PLATE
1527	P0764Z1527	TAP SCREW M4 X 10
1528	P0764Z1528	LOCK NUT M10-1.5
1529	P0764Z1529	STEEL BALL BEARING 16.6MM
1530	P0764Z1530	SLIDING PLATE
1531	P0764Z1531	LOCK ROD HANDLE
1532	P0764Z1532	LOCK NUT M10-1.5

Blade Guard

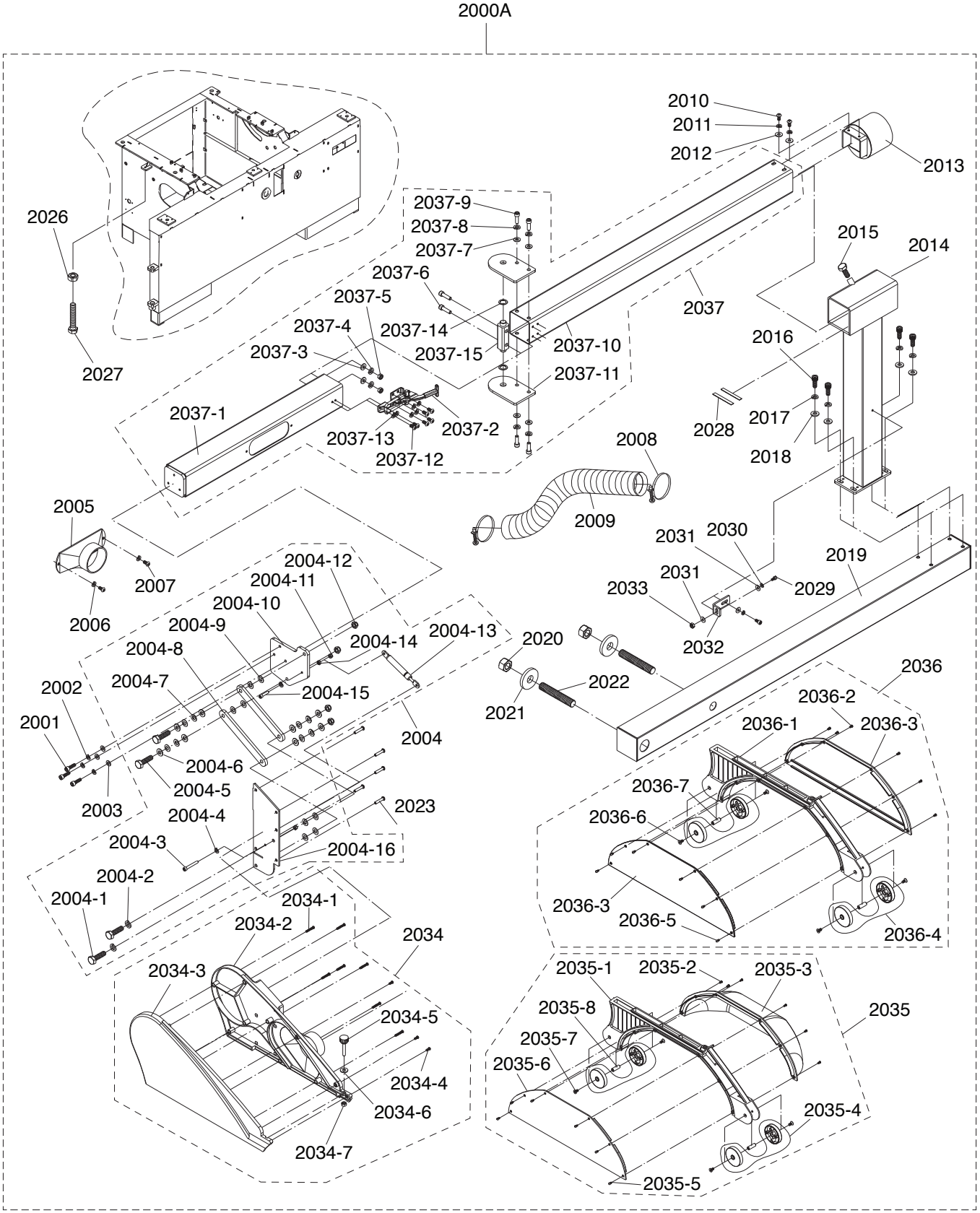
2000A
2010
2011
2012
2013
2026
2027
2037-9
2037-8
2037-7
2037-6
2037-5
2037-4
2037-3
2037-14
2037-15
2037-10
2037-11
2037
2015
2014
2016
2028
2017
2018
2037-1
2037-13
2037-2
2037-12
2008
2009
2005
2007
2006
2031
2030
2019
2031
2033
2029
2032
2004-12
2004-11
2004-10
2004-9
2004-8
2004-7
2004-14
2004-13
2004-15
2004
2020
2022
2021
2036
2036-2
2036-1
2036-3
2002
2001
2004-6
2004-5
2003
2036-7
2036-6
2023
2004-4
2004-3
2004-16
2036-3
2036-5
2036-4
2004-2
2004-1
2034-1
2034-2
2034
2034-3
2034-5
2034-4
2034-6
2034-7
2035-1
2035-2
2035-3
2035
2035-8
2035-7
2035-6
2035-4
2035-5

Blade Guard Parts List

REF	PART #	DESCRIPTION
2000A	P0764Z2000A	BLADE GUARD ASSY V2.10.16
2001	P0764Z2001	CAP SCREW M6-1 X 20
2002	P0764Z2002	LOCK WASHER 6MM
2003	P0764Z2003	FLAT WASHER 6MM
2004	P0764Z2004	HOOD MOUNTING BRACKET ASSY
2004-1	P0764Z2004-1	HEX BOLT M10-1.5 X 35
2004-2	P0764Z2004-2	LOCK WASHER 10MM
2004-3	P0764Z2004-3	CAP SCREW M6-1 X 45
2004-4	P0764Z2004-4	LOCK WASHER 6MM
2004-5	P0764Z2004-5	HEX BOLT M10-1.5 X 35
2004-6	P0764Z2004-6	FLAT WASHER 10MM
2004-7	P0764Z2004-7	FLAT WASHER 10MM NYLON
2004-8	P0764Z2004-8	PIVOT LINKAGE BAR
2004-9	P0764Z2004-9	FLAT WASHER 10MM COPPER
2004-10	P0764Z2004-10	ARM MOUNTING PLATE
2004-11	P0764Z2004-11	LOCK NUT M6-1
2004-12	P0764Z2004-12	LOCK NUT M10-1.5
2004-13	P0764Z2004-13	GAS RETURN SPRING
2004-14	P0764Z2004-14	HEX NUT M6-1
2004-15	P0764Z2004-15	CAP SCREW M6-1 X 25
2004-16	P0764Z2004-16	DUST HOOD MOUNTING PLATE
2005	P0764Z2005	DUST PORT 3"
2006	P0764Z2006	LOCK WASHER 6MM
2007	P0764Z2007	CAP SCREW M6-1 X 12
2008	P0764Z2008	HOSE CLAMP 3-1/4"
2009	P0764Z2009	DUST HOSE 3" X 16-1/2"
2010	P0764Z2010	CAP SCREW M6-1 X 12
2011	P0764Z2011	LOCK WASHER 6MM
2012	P0764Z2012	FLAT WASHER 6MM
2013	P0764Z2013	DUST PORT ARM ADAPTER 4"
2014	P0764Z2014	ARM SUPPORT PEDESTAL
2015	P0764Z2015	HEX BOLT M10-1.5 X 30
2016	P0764Z2016	CAP SCREW M8-1.25 X 25
2017	P0764Z2017	LOCK WASHER 8MM
2018	P0764Z2018	FLAT WASHER 8MM
2019	P0764Z2019	ARM SUPPORT BASE
2020	P0764Z2020	HEX NUT M20-2.5
2021	P0764Z2021	FLAT WASHER 20MM
2022	P0764Z2022	STUD-FT M20-2.5 X 130
2023	P0764Z2023	BUTTON HD CAP SCR M6-1 X 30
2026	P0764Z2026	HEX NUT M12-1.75
2027	P0764Z2027	HEX BOLT M12-1.75 X 70
2028	P0764Z2028	SKID PAD
2029	P0764Z2029	CAP SCREW M6-1 X 20
2030	P0764Z2030	LOCK WASHER 6MM

REF	PART #	DESCRIPTION
2031	P0764Z2031	FLAT WASHER 6MM
2032	P0764Z2032	MOUNTING BRACKET
2033	P0764Z2033	HEX NUT M6-1
2034	P0764Z2034	DUST HOOD ASSY
2034-1	P0764Z2034-1	TAP SCREW M3.5 X 25
2034-2	P0764Z2034-2	HOOD REAR COVER
2034-3	P0764Z2034-3	HOOD FRONT COVER
2034-4	P0764Z2034-4	TAP SCREW M4 X 10
2034-5	P0764Z2034-5	KNURLED KNOB M8-1.25 X 30
2034-6	P0764Z2034-6	FLAT WASHER 8MM
2034-7	P0764Z2034-7	HEX NUT M8-1.25
2035	P0764Z2035	BLADE GUARD ASSY (WIDE)
2035-1	P0764Z2035-1	BLADE GUARD BODY
2035-2	P0764Z2035-2	FLANGE SCREW M4-.7 X 10
2035-3	P0764Z2035-3	GUARD COVER (WIDE)
2035-4	P0764Z2035-4	ROLLER
2035-5	P0764Z2035-5	FLANGE SCREW M4-.7 X 10
2035-6	P0764Z2035-6	GUARD COVER (FLAT)
2035-7	P0764Z2035-7	FLAT HD CAP SCR M6-1 X 10
2035-8	P0764Z2035-8	ROLLER SHAFT
2036	P0764Z2036	BLADE GUARD ASSY (NARROW)
2036-1	P0764Z2036-1	BLADE GUARD BODY
2036-2	P0764Z2036-2	FLANGE SCREW M4-.7 X10
2036-3	P0764Z2036-3	GUARD COVER (FLAT)
2036-4	P0764Z2036-4	ROLLER
2036-5	P0764Z2036-5	FLANGE SCREW M4-.7 X10
2036-6	P0764Z2036-6	FLAT HD CAP SCR M6-1 X 10
2036-7	P0764Z2036-7	ROLLER SHAFT
2037	P0764Z2037	UPPER SUPPORT ARM ASSY
2037-1	P0764Z2037-1	UPPER SUPPORT ARM (SHORT)
2037-2	P0764Z2037-2	ELBOW CLAMP
2037-3	P0764Z2037-3	FLAT WASHER 8MM
2037-4	P0764Z2037-4	LOCK WASHER 8MM
2037-5	P0764Z2037-5	HEX NUT M8-1.25
2037-6	P0764Z2037-6	CAP SCREW M8-1.25 X 30
2037-7	P0764Z2037-7	FLAT WASHER 8MM
2037-8	P0764Z2037-8	LOCK WASHER 8MM
2037-9	P0764Z2037-9	CAP SCREW M8-1.25 X 25
2037-10	P0764Z2037-10	UPPER SUPPORT ARM (LONG)
2037-11	P0764Z2037-11	PIVOT PLATE
2037-12	P0764Z2037-12	CAP SCREW M6-1 X 10
2037-13	P0764Z2037-13	LOCK WASHER 6MM
2037-14	P0764Z2037-14	FLAT WASHER 16MM COPPER
2037-15	P0764Z2037-15	PIVOT SHAFT

Sliding Table Accessories

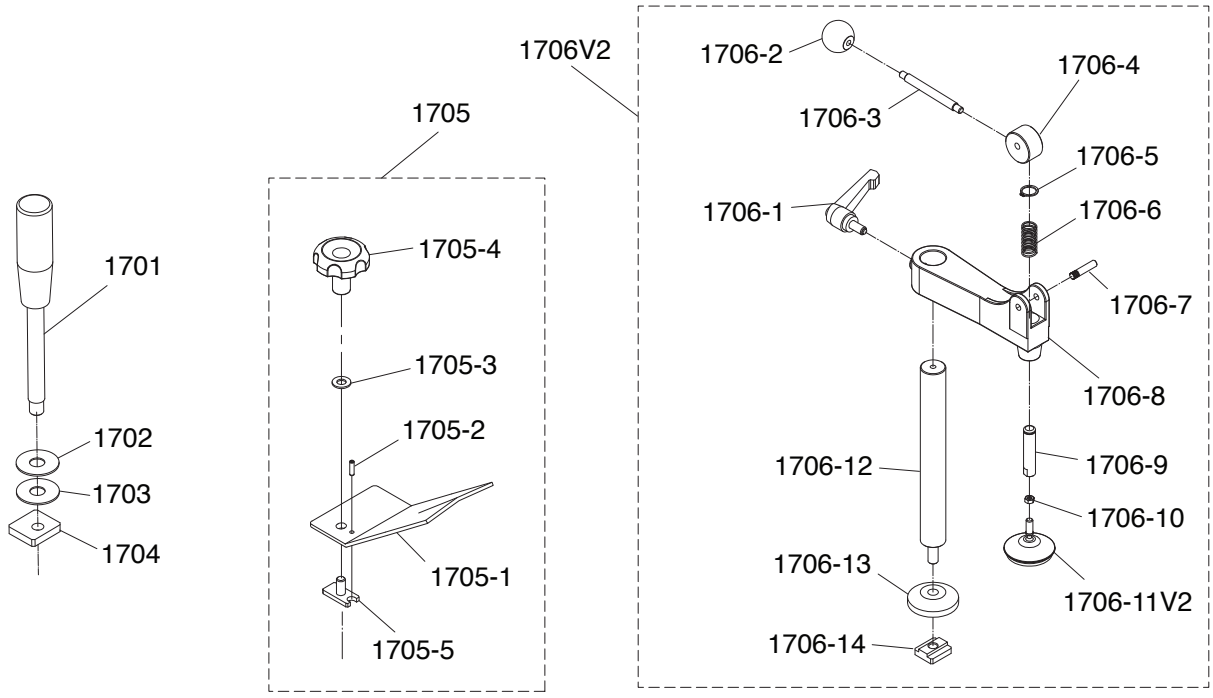

REF	PART #	DESCRIPTION
1701	P0764Z1701	HANDLE M12-1.75 X 20
1702	P0764Z1702	FLAT WASHER 12MM
1703	P0764Z1703	FLAT WASHER 12MM (COPPER)
1704	P0764Z1704	T-SLOT NUT M12-1.75
1705	P0764Z1705	EDGE SHOE ASSEMBLY
1705-1	P0764Z1705-1	EDGE SHOE PLATE
1705-2	P0764Z1705-2	ROLL PIN 5 X 16
1705-3	P0764Z1705-3	FLAT WASHER 10MM
1705-4	P0764Z1705-4	KNOB M10-1.5
1705-5	P0764Z1705-5	T-SLOT BOLT M10-1.5 X 25
1706V2	P0764Z1706V2	HOLD DOWN ASSEMBLY V2.10.17
1706-1	P0764Z1706-1	ADJUSTABLE HANDLE M10-1.5 X 25
1706-2	P0764Z1706-2	ROUND KNOB M8-1.25

REF	PART #	DESCRIPTION
1706-3	P0764Z1706-3	STUD-DE M8-1.25 X 100, 10
1706-4	P0764Z1706-4	CAM
1706-5	P0764Z1706-5	EXT RETAINING RING 14MM
1706-6	P0764Z1706-6	COMPRESSION SPRING
1706-7	P0764Z1706-7	FLUTED PIVOT PIN
1706-8	P0764Z1706-8	HOLD-DOWN BRACKET
1706-9	P0764Z1706-9	HOLD-DOWN SHAFT
1706-10	P0764Z1706-10	HEX NUT 5/16-18
1706V2-11V2	P0764Z1706V2-11V2	HOLD-DOWN PAD V2.8.17
1706-12	P0764Z1706-12	SUPPORT SHAFT
1706-13	P0764Z1706-13	SHAFT BASE
1706-14	P0764Z1706-14	T-SLOT NUT M12-1.75

Electrical

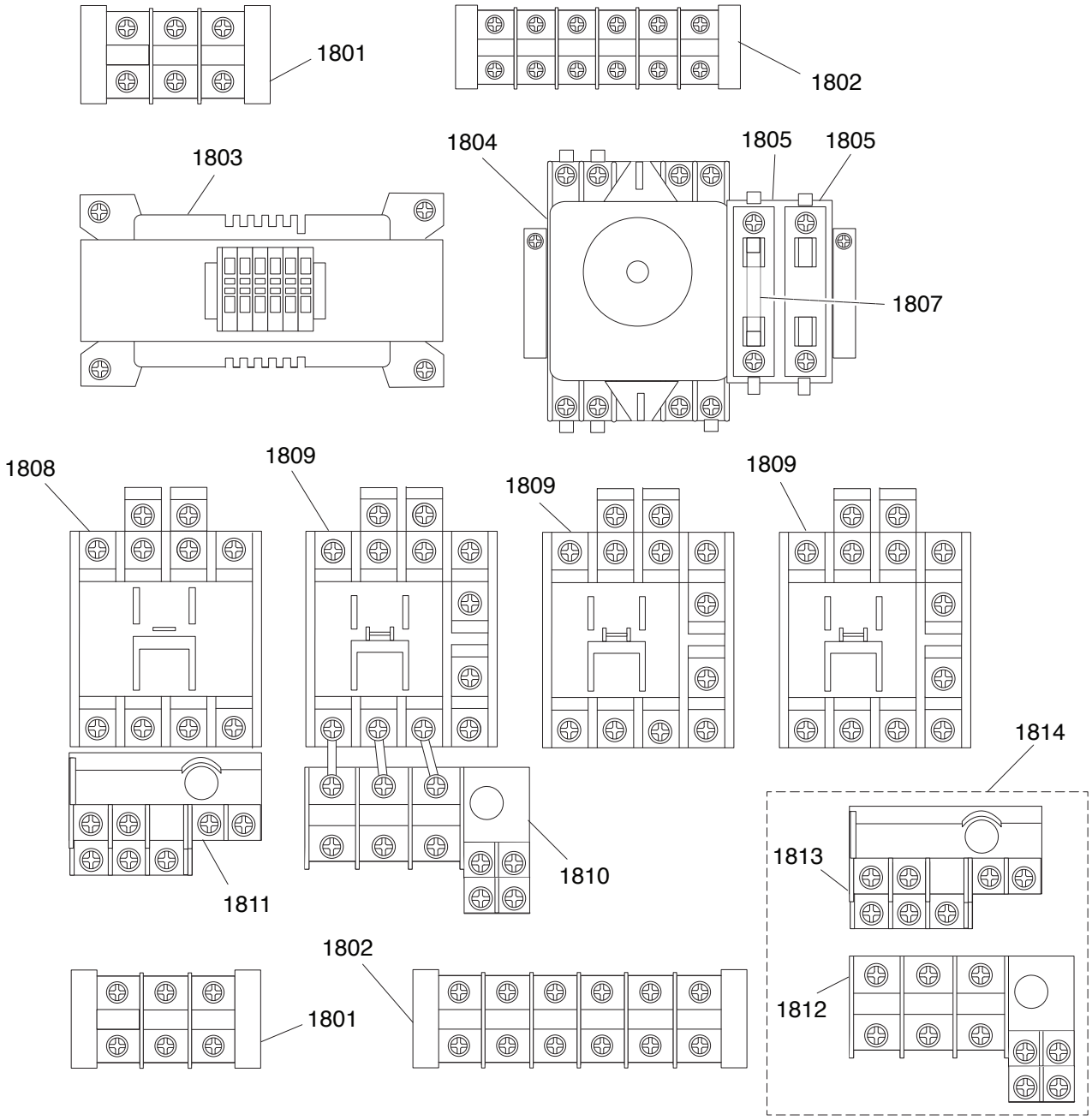

REF	PART #	DESCRIPTION
1801	P0764Z1801	TERMINAL BAR 3P
1802	P0764Z1802	TERMINAL BAR 6P
1803	P0764Z1803	TRANSFORMER LCE TBSM-1000040 0-440V
1804	P0764Z1804	TIMER FOTEK H3-TRD-30S
1805	P0764Z1805	FUSE BLOCK
1807	P0764Z1807	FUSE 2A , GLASS
1808	P0764Z1808	CONTACTOR SHIHLIN S-P11 24V

REF	PART #	DESCRIPTION
1809	P0764Z1809	CONTACTOR SHIHLIN S-P21 24V
1810	P0764Z1810	OL RELAY SHIHLIN TH-P20 22-34A
1811	P0764Z1811	OL RELAY SHIHLIN TH-P12 2.5-4.1A
1812	P0764Z1812	OL RELAY SHIHLIN TH-P20 12-18A
1813	P0764Z1813	OL RELAY SHIHLIN TH-P12 1.3-2.1A
1814	P0764Z1814	440V CONVERSION KIT

Labels & Cosmetics

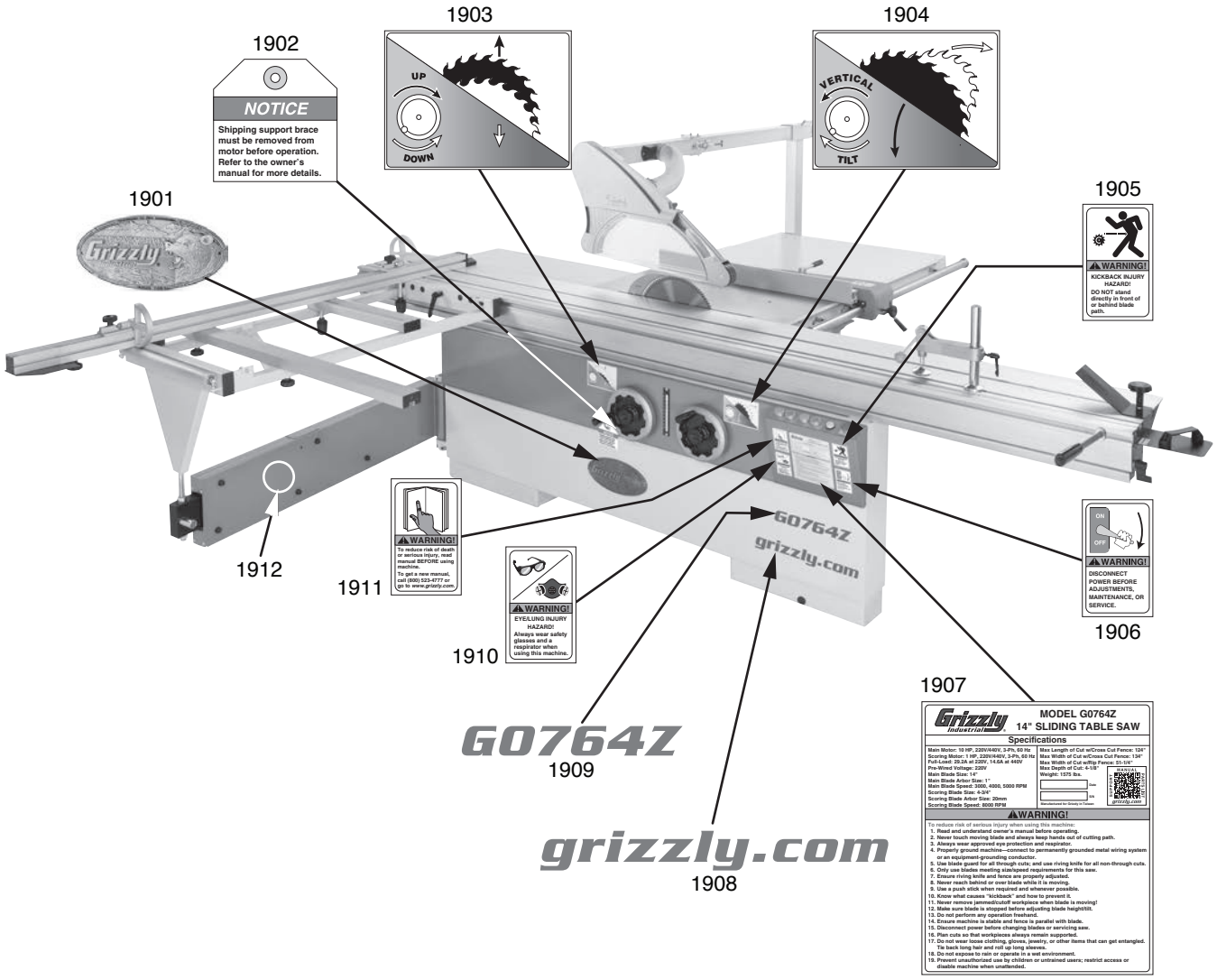

REF	PART #	DESCRIPTION
1901	P0764Z1901	GRIZZLY NAMEPLATE-LARGE
1902	P0764Z1902	SHIPPING BRACE NOTICE LABEL
1903	P0764Z1903	BLADE ELEVATION LABEL
1904	P0764Z1904	BLADE TILT LABEL
1905	P0764Z1905	KICKBACK WARNING LABEL
1906	P0764Z1906	DISCONNECT POWER LABEL

REF	PART #	DESCRIPTION
1907	P0764Z1907	MACHINE ID LABEL
1908	P0764Z1908	GRIZZLY.COM LABEL
1909	P0764Z1909	MODEL NUMBER LABEL
1910	P0764Z1910	GLASSES/RESPIRATOR LABEL
1911	P0764Z1911	READ MANUAL LABEL
1912	P0764Z1912	TOUCH-UP PAINT, GRIZZLY GREEN

⚠WARNING

Safety labels help reduce the risk of serious injury caused by machine hazards. If any label comes off or becomes unreadable, the owner of this machine MUST replace it in the original location before resuming operations. For replacements, contact (800) 523-4777 or www.grizzly.com.

Labels & Cosmetics (Cont.)

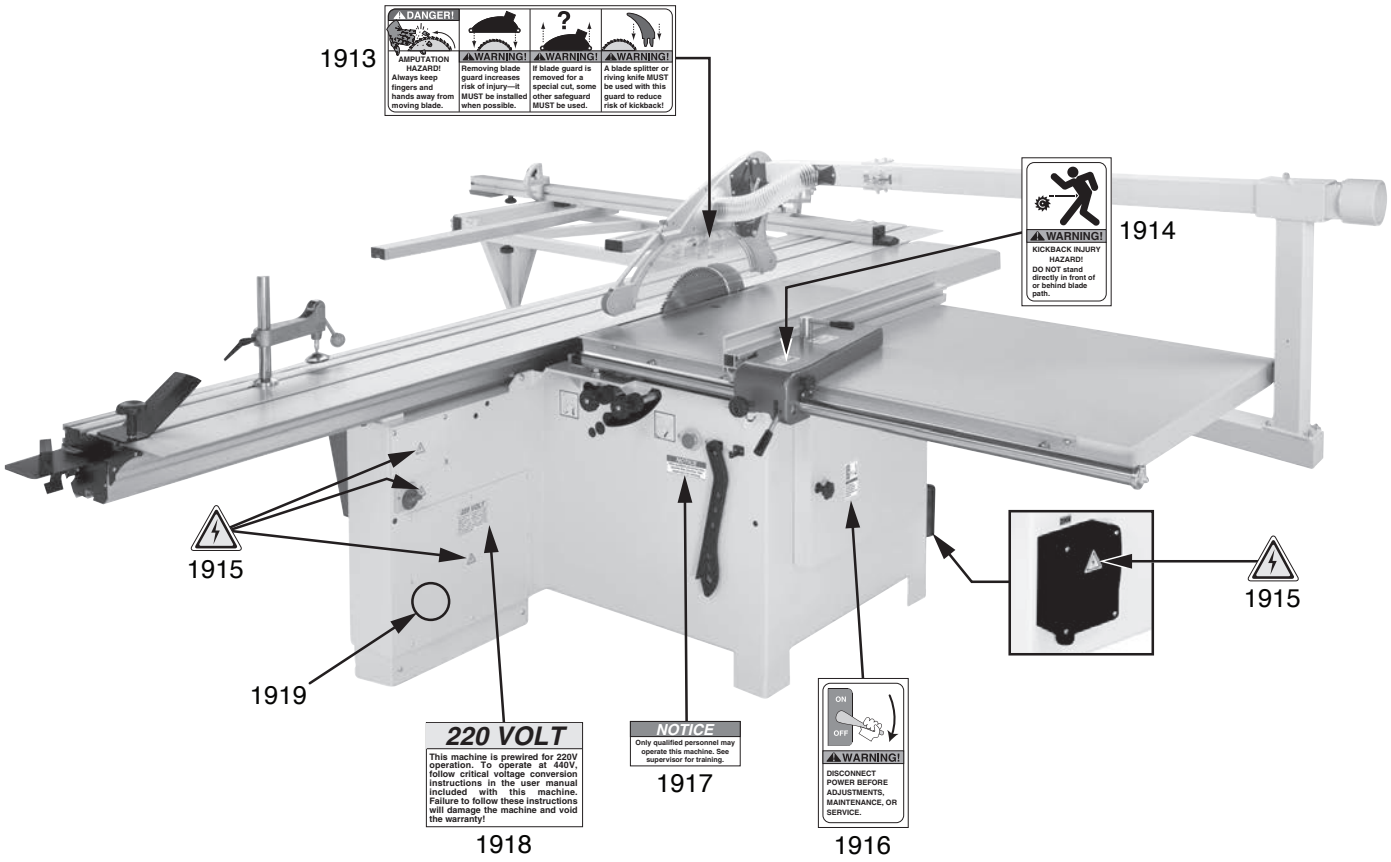

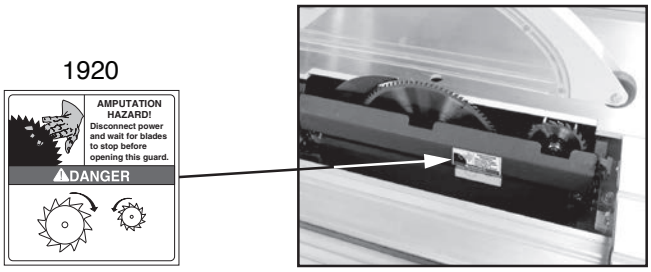

REF	PART #	DESCRIPTION
1913	P0764Z1913	TABLE SAW BLADE GUARD LABEL
1914	P0764Z1914	KICKBACK WARNING LABEL
1915	P0764Z1915	ELECTRICITY LABEL
1916	P0764Z1916	DISCONNECT POWER LABEL

REF	PART #	DESCRIPTION
1917	P0764Z1917	QUALIFIED PERSONNEL NOTICE LABEL
1918	P0764Z1918	220V LABEL
1919	P0764Z1919	TOUCH-UP PAINT, GREY PUTTY
1920	P0764Z1920	AMPUTATION DANGER LABEL

⚠WARNING

Safety labels help reduce the risk of serious injury caused by machine hazards. If any label comes off or becomes unreadable, the owner of this machine MUST replace it in the original location before resuming operations. For replacements, contact (800) 523-4777 or www.grizzly.com.

WARRANTY & RETURNS

Grizzly Industrial, Inc. warrants every product it sells for a period of **1 year** to the original purchaser from the date of purchase. This warranty does not apply to defects due directly or indirectly to misuse, abuse, negligence, accidents, repairs or alterations or lack of maintenance. This is Grizzly's sole written warranty and any and all warranties that may be implied by law, including any merchantability or fitness, for any particular purpose, are hereby limited to the duration of this written warranty. We do not warrant or represent that the merchandise complies with the provisions of any law or acts unless the manufacturer so warrants. In no event shall Grizzly's liability under this warranty exceed the purchase price paid for the product and any legal actions brought against Grizzly shall be tried in the State of Washington, County of Whatcom.

We shall in no event be liable for death, injuries to persons or property or for incidental, contingent, special, or consequential damages arising from the use of our products.

The manufacturers reserve the right to change specifications at any time because they constantly strive to achieve better quality equipment. We make every effort to ensure that our products meet high quality and durability standards and we hope you never need to use this warranty.

In the event you need to use this warranty, contact us by mail or phone and give us all the details. We will then issue you a "Return Number," which must be clearly posted on the outside as well as the inside of the carton. We will not accept any item back without this number. Proof of purchase must accompany the merchandise.

Please feel free to write or call us if you have any questions about the machine or the manual.

Thank you again for your business and continued support. We hope to serve you again soon.

To take advantage of this warranty, you must register it at **https://www.grizzly.com/forms/warranty**, or you can scan the QR code below to be automatically directed to our warranty registration page. Enter all applicable information for the product.



grizzly.com®

TOOL WEBSITE

Buy Direct and Save with Grizzly® – Trusted, Proven and a Great Value!

~Since 1983~

Visit Our Website Today For Current Specials!

ORDER

24 HOURS A DAY!

1-800-523-4777

